WORKHOLDING SOLUTIONS
MASTER CATALOG

Jergens®
MANUFACTURING EFFICIENCY

WWW.JERGENSINC.COM

WORKHOLDING SOLUTIONS SPECIALTY FASTENERS LIFTING SOLUTIONS

Jergens
www.jergensinc.com

WORKHOLDING SOLUTIONS

Support, Locate and Hold:

Jergens Workholding Solutions has all the standard components you need, plus vises and innovative quick change fixturing systems to help you maximize your machine uptime.

QUICK CHANGE FIXTURING 5–71

Jergens is the world leader in quick change fixturing systems that help you maximize efficiency and uptime. These productivity-boosting systems include the Ball Lock® Mounting System, Bock Brand Quick Change Fixturing System, the Zero Point System, and the Fixture Pro® 5-Axis Quick Change Fixturing System.

PRODUCTION VISES 73–133

With quick-change, machinable jaws and other time-saving features, Jergens vises can integrate with Ball Lock® and Bock DexLoc™ to dramatically reduce set up times. Our entire vise line was designed to help you machine more efficiently, saving you time and money on HMCs, VMCs, and 5-axis machines.

POWER CLAMPING 135–202

Durable, reliable clamping solutions from Jergens provide cost-effective performance, with a wide selection of boosters, clamps, cylinders, pumps, swing cylinders, hydraulic controls, and more.

LOCATING COMPONENTS 203–230

Whether you're building your own fixtures or customizing existing workholding devices, Jergens has all the locating components you need to ensure fast, accurate locating.

WORKHOLDING COMPONENTS 231–297

With one of the largest selections of workholding components available, Jergens has everything you need to design and build fixtures, jigs, and other workholding devices.

What started as a simple component-based business has grown into a full workholding solutions line that includes engineered products to help customers implement lean manufacturing programs. Whether you're looking for a full line of tooling and locating components, vises, power clamps or quick change fixturing solutions, Jergens has the products you need. We back up our products with a quality guarantee, and engineering assistance to help you with your application challenges.

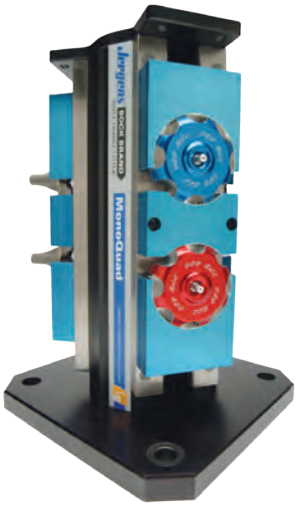

Jergens Company Profile

Jergens Inc. was founded in 1942 by Jack Schron, Sr. and his father Christy, to provide standard components for building jigs and fixtures. Today the fourth generation of family involvement continues stronger than ever. Throughout it's sixty-year history the company has grown into four separate operating divisions: Tooling Component Division (TCD), Jergens Industrial Supply (JIS), Acme Industrial Company (AIC), and Advanced Systems Group (ASG) Division of Jergens. While all divisions are vital to the Jergens family, the TCD Division is the centerpiece of our manufacturing capabilities. In June 1999, Jergens moved into a new 110,000 square foot facility and prides itself by manufacturing over 80% of it's product offering, as well as setting the standard for producing the highest quality components in our industry.

Jergens Tooling Component Division now comprises 3 distinct business units: Workholding Solutions, Lifting Solutions and Specialty Fasteners. Building on its reputation of uncompromising quality standards, Jergens is committed to helping its customers achieve leaner, more profitable manufacturing, and continues to add products and engineered solutions for an integrated approach to "Manufacturing Efficiency."

Today, you'll find our tooling components, fasteners and hoist rings at work in just about every industry on every continent. And our innovative Quick Change Workholding Solutions like Ball Lock® Mounting System have changed the way manufacturers worldwide think about productivity.

Jergens actively supports global, multinational and internationally based customers with metric dimensioned product offerings as well as many inch threaded products that are common in aerospace and industrial applications around the world. In important manufacturing markets in Canada, Europe, Asia and Latin America, Jergens representatives and stocking distributors have represented Jergens for more than 30 years. Our international representatives are trained technically on our products and provide expertise to customers and sub dealers in applying Jergens technologies to local industries. In recent years, two wholly owned affiliates were formed to serve the Chinese and Indian markets. Jergens (Shanghai) Commercial Co., Ltd, opened in 2006 and Jergens India Private Ltd., Navi Mumbai India opened in 2009. These fully registered trading subsidiaries employ trained multi-lingual engineers and commercial managers who provide marketing and importing, warehousing, distribution and technical support to our customers, distributors and local representatives.

Additionally, we offer a wide range of metalworking tools, clamps, and supplies to manufacturers in Northeastern Ohio, through our JIS Division. Acme Industrial, located in Carpentersville, Illinois, is a premium manufacturer of precision drill bushings and keylocking thread inserts. Our ASG Division specializes in products for light assembly ranging from torque-controlled electric screwdrivers to automation systems.

In addition to our unique product designs, we lead the industry with unparalleled customer service and delivery. Our website is a good example of our commitment to be the most innovative company in our industry. Customers and distributors can check stock and order on-line, view the Jergens catalog, and even download 2D, 3D and solid model CAD drawings in a variety of formats. Visit our website at www.jergensinc.com for the latest news and product information, as well as links to our other divisions. The Jergens family thanks you for your business.

Distribution of Jergens Products

Jergens is proud to be represented by a network of qualified distributors throughout the world. If you do not know the name of the distributor nearest you, please call Jergens Customer Service at 1-877-486-1454 or visit www.jergensinc.com.

Quality Policy

Jergens, Inc. manufactures and supplies only *quality* products. Our quality system is ISO 9001: 2008 Certified. Center-Pull and Side-Pull Hoist Rings are CE Certified. If there is a problem with any of our products, please contact your local Jergens Distributor or contact our Customer Service Department.

Design Aids

Jergens, Inc. offers several CAD drawing formats for use in fixture design. Our Fixture Pro® software is available on CD. Our internet site (www.jergensinc.com) offers our complete catalog with hot links to CAD drawings on most of our products. We also offer 3D solid models of our products via the internet.

Application Assistance

Jergens Inc. maintains a complete Technical Sales Department to work with you. Please feel free to call upon their knowledge and experience. Application videos are available for the Ball Lock® Mounting System, 5-Axis Fixture Pro,® Spinner-Grip™ Flange Nuts, and Hydraulic Vise Column products at www.jergensinc.com or www.youtube.com/users/jergensinc.

Engineering Changes

Product improvement is a continuing process at Jergens, Inc. Specifications and engineering data are subject to change without notice. **If current information is critical to your design, it is suggested that you contact the Jergens Customer Service Department, or download the most current drawing from our website*, to verify any dimensions or specifications**.

Bar Coding

Jergens' boxed and bagged products are fully bar coded for automatic identification. The bar code labels contain the ASCII Code 39 format, which was chosen as being suitable for most bar code readers. Jergens' bar codes will identify part numbers and manufacturer's codes.

Specials

Jergens, Inc. will modify any item that is similar to our standard component parts. Please contact your Jergens Distributor with your request for a quote. Prints or sketches should be furnished if possible.

TCMA Standards

Products throughout this catalog meet the standards of the Tooling Component Manufacturers' Association. The items are asterisked and are interchangeable with other tooling component manufacturer's products.

Material and Finish Specifications

Stressproof®: A severely cold worked, furnace treated steel bar. Produced by LaSalle patented process to obtain high strength, free machinability, good wear, and minimum warpage in the bar.

Alloy Steel - 4140 or equivalent

Low Carbon Steel - Free Machining 1215, 1018, or equivalent

52100: QQS-624

Zinc Plate: ASTM B633, Type III, Class FE/ZN 5

Cadmium Plate: AMS-QQ-P-416, Class 3, Type 1

Black Oxide: MIL-DTL-13924 and AMS-2485

Black Anodize: per Mil. Spec. MIL-A-8625, Type II, Class 2 and AMS-2472

Passivate: AMS 2700

Alternate Finishes available upon request.

*** 3D Solid Models are available in multiple formats from www.jergensinc.com**

Jergens, Inc.
Manufacturing Number: 697830
FSCM #94882

ISO 9001: 2008
Registration #00010133

QUICK CHANGE FIXTURING

Ball Lock® Mounting System (Inch)

Ball Lock® for Rotary Indexers 20–21
Ball Lock® Accessories 26
Commonly Asked Questions About the Ball Lock® Mounting System 8–9
Fast Acting Ball Lock® Shanks 26
Fixture Kits for HAAS 18
Fixture Plates....13
Fixture Plates for Multi-Purpose Subplates 10
Fixture Plates for Tooling Columns.... 16
Jigsaw Interlocking Plates 11
Liners 23
Liners, Stainless Steel 25
Modular Grid Fixture Plates 11
Multi-Purpose Subplates 10
Quick Change Kits 17
Receiver Bushings 23
Receiver Bushings, Stainless Steel 25
Repair Kits.... 22
Set-Up Reduction Worksheet 19
Shanks 22
Shanks, Stainless Steel 24
Subplates 12
Subplates for Tooling Columns 16
Tooling Columns, 4 sided.... 15
Tooling Columns, T-Columns 14

Ball Lock® Mounting System (Metric)

Ball Lock® for Rotary Indexers 35–36
Ball Lock® Accessories 41
Fast Acting Ball Lock® Shanks 41
Fixture Plates.... 30
Fixture Plates for Multi-Purpose Subplates 28
Fixture Plates for Tooling Columns.... 34
Jigsaw Interlocking Plates 28
Liners 38
Liners, Stainless Steel 40
Modular Grid Fixture Plates 28
Multi-Purpose Subplates 27
Quick Change Kits 31
Receiver Bushings 38
Receiver Bushings, Stainless Steel 40
Repair Kits.... 37
Shanks 37
Shanks, Stainless Steel 39
Subplates 29
Subplates for Tooling Columns 34
Tooling Columns, 4 sided.... 33
Tooling Columns, T-Columns 32

Zero Point Mounting System

Clamping Bracket 55
Pull Studs & Engagement Screws.... 48–49
Clamping Plates.... 47
Clamping and Positioning 46
Flange Type Installation Module....55–56
Rapid-Clamping Cylinder 57
Installation Clamping Modules 50–52
Raised/Mounted Clamping Module 53–54
System Overview....42–45

Fixture Pro® 5-Axis Quick Change Fixturing

Bushings, QLS (Quick Lock System) 70
Chip Plug, QLS (Quick Lock System) 70
ER Collett.... 68
Fixture Plates, Blank 65
Locating Keys 71
Locating Pins 69
Machinable Blanks, Steel.... 65
Pallet Changers, Drop & Lock™.... 66
Risers, Aluminum & Steel....62–63
Self Centering 60mm Vise 66
Shoulder Screws, QLS (Quick Lock System).... 71
Subplates 62
Top Plates, Riser.... 64
Top Tooling, Dovetail Vises 67
System Overview....58–61

Jergens®
MANUFACTURING EFFICIENCY

We Put It All Together… In Seconds.

Ball Lock® MOUNTING SYSTEM

Maximize productivity levels and dramatically increase throughput with Ball Lock®.

Looking to realize the full benefits of lean manufacturing? Then you need the one system that puts it all together, so you can put it all together…and that's Ball Lock®.

Ball Lock® is the industry's most popular quick-change, fixturing-flexible mounting system that can be configured to create lean-optimized solutions for your most demanding needs.

The original quick change system for fast set-ups and machine changeover.

SHANKS

RECEIVERS

FIXTURE PLATES & SUBPLATES

VISES

The Ball Lock® Mounting System is used as a Quick Change Solution on the following:

- CNC Machines
- Palletized Fixtures
- Stamping
- Fabricating
- Injection Molding
- Packaging Machines
- Assembly Machines
- EDM
- Robotics
- Welding Fixtures

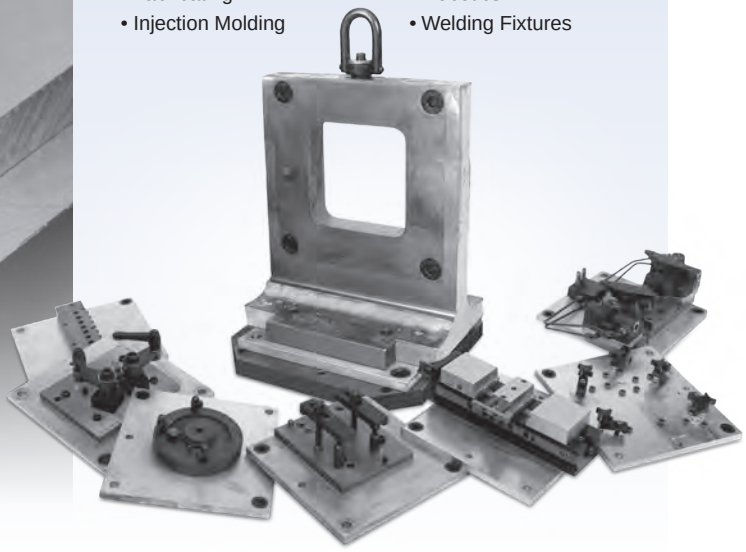

Lean Manufacturing and Set Up Reduction Applications

Accurately Locate and Lock Fixture Plates to Subplates in Seconds… With No Indicating Required.

Machining Cast Part

Previous Set Up Method:
Located part with dowel pins, bolted part to tombstone fixture. Indicated part to zero datum point.

Set Up Using Ball Lock® System:
Mount parts to fixture plate while machining other parts. Mount fixture plate to tombstone using Ball Lock® shanks. No indicating required because system provides ±0.0005 (±0.013mm)repeatability.

Previous Set-Up Time:
15 minutes

Set Up Time With Ball Lock® System:
60 seconds

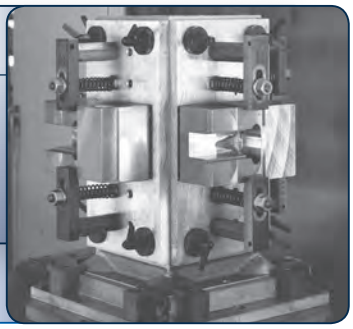

CNC Machine Base:

Drilling and reaming forged part.

Previous Set Up Method:
Fixture plate located with dowel pins bolted to machine base. Fixture plate and parts indicated.

Set Up Using Ball Lock® System:
Parts are pre-mounted on fixture plate, which is then mounted to machine base using Ball Lock® shanks. No need to indicate.

Previous Set Up Time:
7 minutes

Set Up Time with Ball Lock® System:
60 seconds

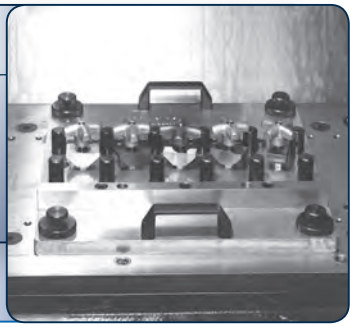

CNC Vertical Machining Center

Machining aircraft valve parts

Previous Set Up Method: New Project. New Machine.No Prior History.

Set Up Using Ball Lock® System: Using Ball Lock® Jig Saw Plate on Multi-Purpose Subplate enables operator to mount two more vises on the fixture. No indicating needed.

Previous Set Up Time:
New Set Up.

Set Up Time With Ball Lock® System:
80 seconds setting up six vises.

Two-Sided Tombstone

Drilling and tapping cylindrical bodies.

Previous Set Up Method:
Fixture located and bolted to tombstone. Had to be indicated.

Set Up Using Ball Lock® System:
Fixture plate mounted and located with Ball Lock® shanks. No need to indicate.

Previous Set Up Time:
12 minutes

Set Up Time with Ball Lock® System:
45 seconds

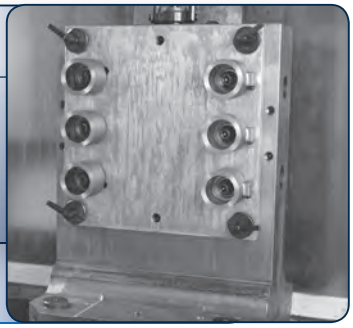

Locates

The Ball Lock® System accurately positions your fixtureplate with a repeatability of ±0.0005" (±0.013mm) or better, minimizing the need to indicate your fixture.

Locks

The Ball Lock® System securely holds fixture plates to subplates with up to 20,000 lbs. (9000 Kg) of hold-down force per shank.

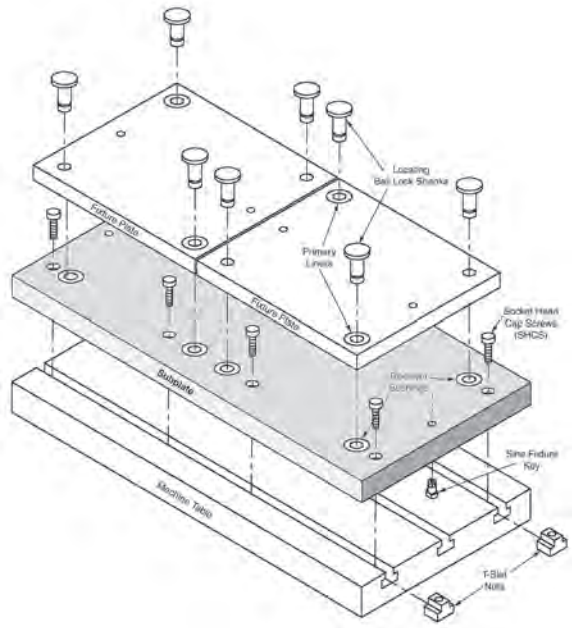

The Ball Lock® Mounting System is designed to speed the accurate locating and locking of fixture plates to subplates. The system consists of three parts: a Locating Shank, a Liner Bushing, and a Receiver Bushing. Using the Ball Lock® Mounting System is a simple process: Install a subplate with receiver bushings on your machine table; add your fixture plate with two locating liner bushings; then insert two locating shanks through the liners and into the receiver bushings to provide accurate location. $2^1/_2$ turns of the set screw in each of the locating shanks provides positive holding force. Additional Ball Lock® Shanks are inserted through clearance holes in the fixture plate and set screws tightened for additional holding force distributed across the fixture plate.

It is recommended that the use of the Ball Lock® Mounting System for locating and clamping of fixture plates be incorporated in a systematic process. All fixture plates should have two locating points positioned as far apart as possible. There is no advantage to having more than two

The Ball Lock® Mounting System provides a method of quickly and accurately locating fixtures onto machine tables. The Ball Lock® Mounting System has done for machining centers what the Japanese SMED concept did for presses. Instead of single minute exchange of dies, Ball Lock® provides single minute exchange of fixtures. Fixtures can often be exchanged in less than a minute and with position repeatability of ±0.0005" (±0.013mm). Fixtures can be exchanged between different machines when both are using the Jergens Ball Lock® Mounting System.

Commonly Asked Questions

Q. What is the Ball Lock® Mounting System?
A. It is a means of locating and locking two flat surfaces together, normally a fixture plate and a sub-plate.

Q. How does it locate?
A. Similar to locating pins, two Ball Lock® shanks (pins) pass through two precision liner bushings on the fixture plate and into two precision receiver bushings on the subplate.

Q. How does it lock?
A. Inside the shank are three balls that expand into a tapered groove in the receiver bushing. This action draws the plates together. The locking balls are activated by turning a setscrew in the head of the shank, which pushes a 4th ball to distribute the clamping forces between the 3 locking balls.

Q. How many shanks are required to locate and lock each fixture?
A. Only two shanks, passing through bushings in the fixture plates, are required for location. However, additional shanks passing through clearance holes in the fixture plate will provide additional holding force distributed across the plate.

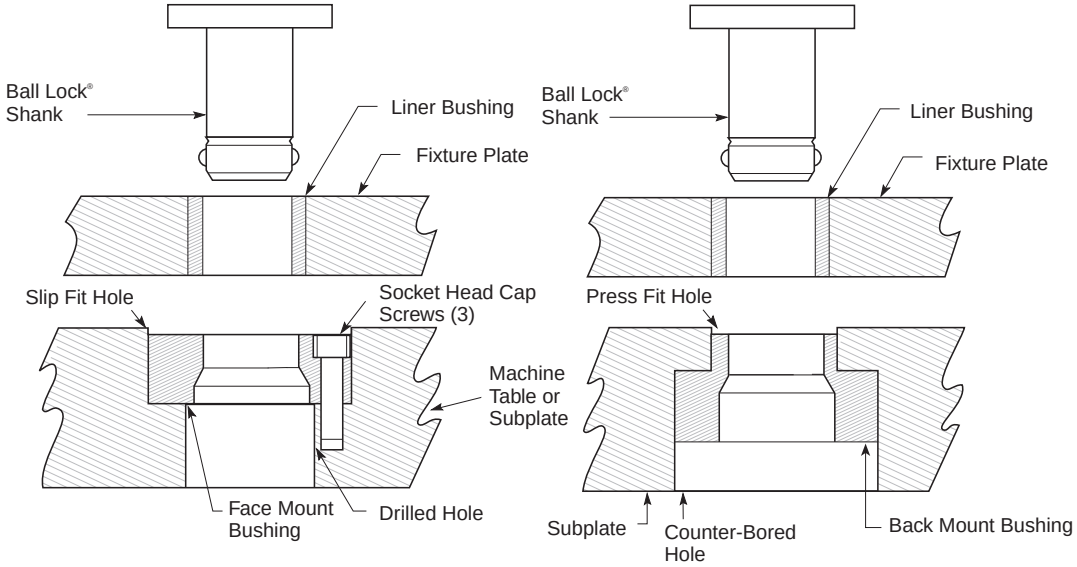

Mounting Method With Face Mount Bushing

Mounting Method With Back Mount Bushing

locating points. If more than two flanged shanks are required to provide additional hold- down force, omit liner bushings in the additional holes in the fixture plate and allow 0.030" (0.76mm) over the nominal size. The additional clearance will insure that these holes have no influence on the locating holes.

How accurate should positioning be?
The center distance of the receiver bushings in the machine table, tombstone, or subplate should be as accurate as possible ±0.0002" (±0.005mm) recommended. Accurate location will assure interchangeability of numerous fixture plates. For accurate repeatability within ±0.0005" (±0.013mm) of true position, both liner bushings in the fixture plate should be *primary* liners and the center distance tolerance should be ±0.0002" (±0.005mm). For a slightly looser fit, repeatability within ±0.0015" (±0.04mm) of true position, use one *primary* and one *secondary* liner with a center distance tolerance of ±0.001" (±0.03mm).

Q. Is there a preferable location for the liner bushing?
A. System repeatability is improved if the liners are located at opposite corners of a rectangular fixture plate. For consistency, we recommend locating the liner bushings at top left and bottom right.

Q. What are the advantages of using the Ball Lock® System over the conventional method of dowel pins and cap screws?
A. Both locating and locking are accomplished in the same motion. Ball Lock® shanks require only 2.5 turns to lock a 1/2–13 (M12) screw with ¾" (18mm) of thread engagement require 10 turns to lock. On CNC machines, the repeatability of fixture locations makes indicating of the fixture unnecessary.

Q. How do I recess the fixtureplate for a clear surface ?
A. Counterbore the fixture plate to a diameter large enough to allow easy removal of the shank.
Note: The thickness of the plate section under the head of the shank is critical and must conform to mounting instructions .

Q. What if my plate is thinner than the recommended thickness?
A. By adjusting the depth of the counterbore for the receiver bushing in the subplate, you can still use the Ball Lock® System. If there are any questions on this type of application, please call 1-877-426-2504.

Q. Can I use the shanks in a heated environment?
A. The shank is made of alloy steel, heat treated to 40-45 Rc and should with stand temperatures up to 400°F. (200°C).
Note: Thermal expansion of fixture plates may affect the center distance tolerance and repeatability.

Multi-Purpose Subplates

40x20 Multi-Purpose Subplate

Part Number	Wt. (lbs)
49112	285

The Jergens Multi-Purpose Subplate accommodates a wide variety of fixture plates and vises. This versatility facilitates using the same VMC for diverse products in repetitive runs, long and short batch sizes.

- FreMax™ 15 Steel or Equivalent
- Thickness: 1 1/4" ±0.005"
- Parallel within 0.001"

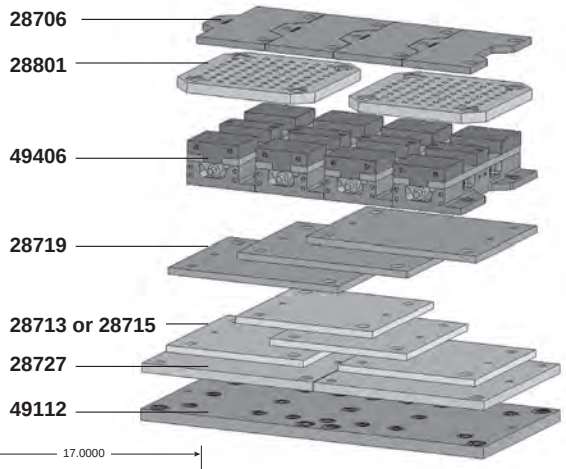

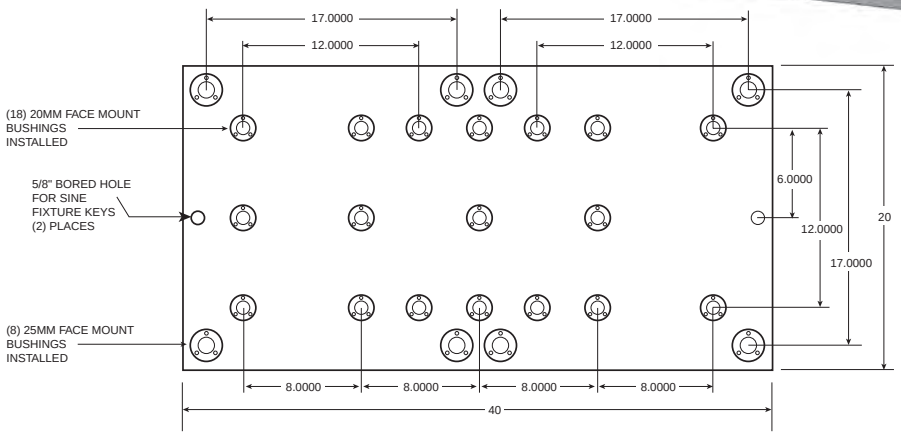

Fixture Plate Options for Multi-Purpose Subplates – Aluminum or Steel

Fixture Plate*/Vise Part Number	Thickness of Fixture Plate	Number of Fixture Plates/Vises That Mount on Multi-Purpose Subplate	Receiver Bushing Center Distance	Receiver Bushing Size	Required Ball Lock® Shank Part Number	Number of Shanks Required Per Fixture Plate/Vise
28713 (14 x 14) Fixture Plate	3/4"	2	12 x 12	20 mm	**49601**	4
28715 (16 x 16) Fixture Plate	3/4"	2	12 x 12	20 mm	**49601**	4
28801 (16 x 16) Modular Grid Plate	1 1/8"**	2	12 x 12	20 mm	**49602**	4
28706 Jigsaw Interlocking Plate	3/4"	4	8 x 12	20 mm	**49601**	3
28727 (20 x 20) Fixture Plate	1"	2	17 x 17	25 mm	**49612**	4
28719 (20 x 16) Fixture Plate	3/4"	1	16 x 12	20 mm	**49601**	4
49406 6" Jigsaw Base Vise	3/4"	4	8 x 12	20 mm	**49601**	3

* See next page for dimensional data on fixture plates. Part numbers shown for aluminum plates, also available in steel.
**Counterbored to 1" at mounting holes.

Fixture Plates for Multi-Purpose Subplate

14x14x3/4" Fixture Plate

Aluminum Plate Part Number	Wt. (lbs)
28713	14

Steel Plate Part Number	Wt. (lbs)
28813	42

16x16x3/4" Fixture Plate

Aluminum Plate Part Number	Wt. (lbs)
28715	18

Steel Plate Part Number	Wt. (lbs)
28815	55

- Cast Aluminum or FreMax™ 15 Steel or equivalent
- Thickness: 3/4" ±0.005"
- Parallel within 0.001" Steel
- Mounts to subplates with Ball Lock® Shank 49601 (20 x 3/4")

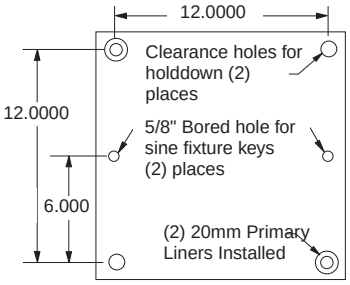

16x16 Modular Grid Fixture Plate

Steel Plate Part Number	Wt. (lbs)
28801	80

- FreMax™ 15 Steel or equivalent
- Thickness: 1 1/8" ±0.005"
- Parallel within 0.001"
- Mounts to subplates with Ball Lock® Shank 49602 (20 x 1")

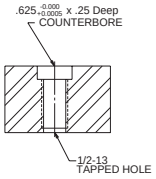

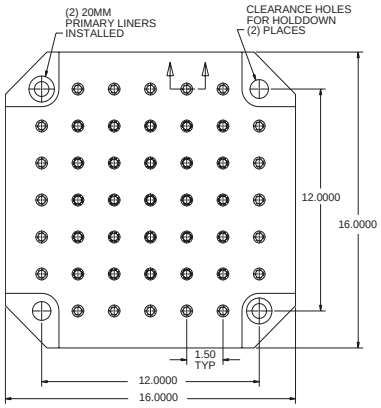

Jigsaw Interlocking Fixture Plate

Aluminum Plate Part No	Wt.	Steel Plate Part No	Wt.	A	B	C	Jergens D	Vise P/N
28705	6	—	—	7.97	5.97	15.00	6.0000	**49401**
28706	11	**28806**	34	9.97	7.97	16.00	8.0000	**49402**

- Cast Aluminum or FreMax™ 15 Steel or equivalent
- Thickness: 3/4" ±0.005"
- Parallel within 0.001" Steel
- For use with narrow base 4" or 6" vise models
- Design allows close vise spacing for more parts per run
- Easily mounts to Subplates using the Ball Lock® Shank 49601 (20 x 3/4")
- Useful for high density fixturing of small parts

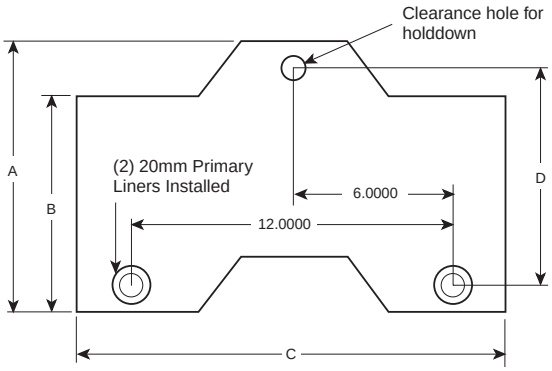

20x20x1" Fixture Plate

Aluminum Plate Part Number	Wt. (lbs)
28727	38

Steel Plate Part Number	Wt. (lbs)
28827	114

- Cast Aluminum or FreMax™ 15 Steel or equivalent
- Thickness: 1" ±0.005"
- Parallel within 0.001" Steel
- Mounts to subplates with Ball Lock® Shank 49612 (25 x 1")

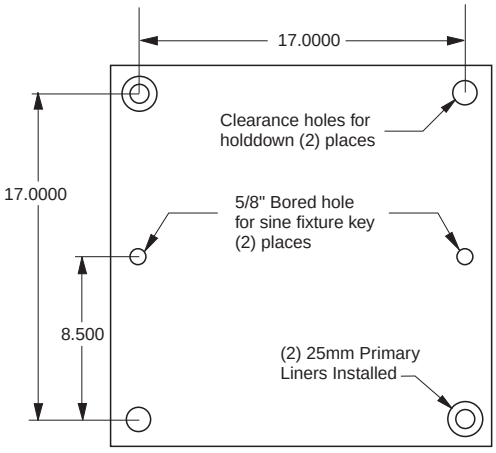

Ball Lock® Standard Subplates

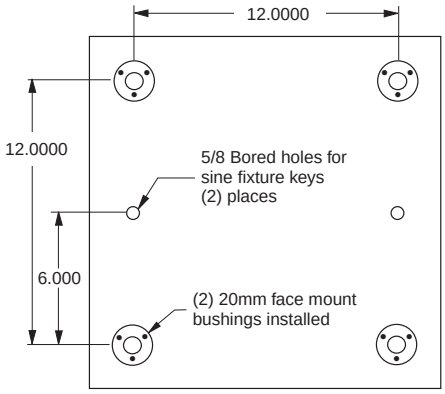

16x16 Subplate

Part Number	Wt (lbs)
49101	81

Equipped with four 20mm receiver bushings for use with 14x14 or 16x16 fixture plates. Ideal for horizontal machining centers or multiple pallet machining centers.

- Fremax™ 15 steel plate or equivalent
- Thickness: 1-1/8" ±0.005"
- Parallel within 0.001"

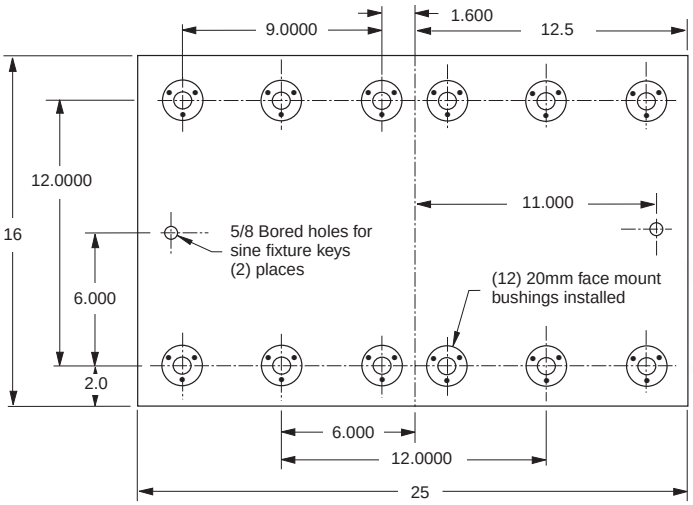

Aluminum Plate Part Number	Steel Plate Part Number	Number of Fixture Plates	Plate Width and Length
28713	**28813**	1	14"x14"
28715	**28815**	1	16"x16"
28711	**28811**	2	12"x14"

25x16 Dual Station Subplate

Part Number	Wt (lbs)
49111	128

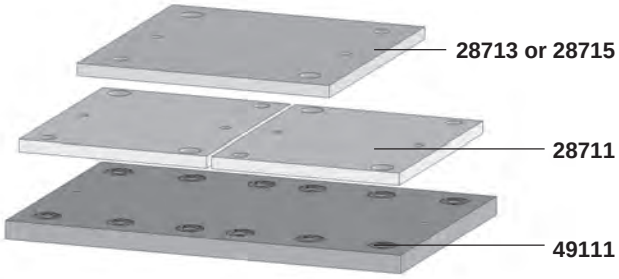

Equipped with twelve installed 20mm receiver bushings to easily locate and mount Jergens Standard Fixture Plates:

- Fremax™ 15 steel plate or equivalent
- Thickness: 1-1/8" ±0.005"
- Parallel within 0.001"

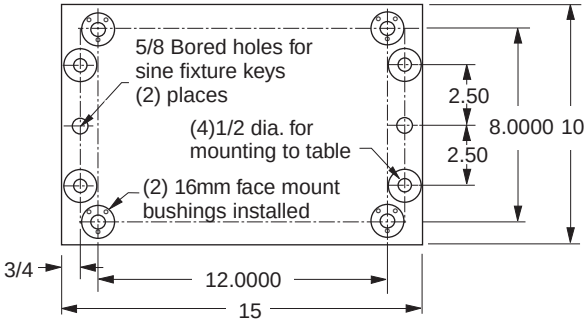

15x10 Bridgeport™ – Style Subplate

Part Number	Wt (lbs)
49121	32

Equipped with four installed 16mm receiver bushings and 1/2" mounting holes. Used with the Bridgeport™ style fixture plates 28731 or 28831.

- Thickness: 3/4" ±0.005"
- Parallel within 0.001"

Ball Lock® Quick Change Kits include all components needed in a single package. See page 17 for details.

Ball Lock® Fixture Plates

- Cast Aluminum or FreeMax™ 15 Steel or equivalent
- Thickness tolerance ±0.005"
- Parallel within 0.001" Steel
- 6061–T-651 Aluminum plates, within .001 available upon request

Aluminum Ball Lock® Fixture Plates with 2 Primary Liners Installed

Plate Part Number Aluminum	Weight (lbs)	Plate Part Number Steel	Weight (lbs)	Plate Dimensions (in.)	Plate Thickness (in.) ±0.005	Ball Lock®	
						Shank Size Dia. (mm)	Shank Part Number
28706	9	**28806**	34	9.97 x 16	3/4	20	**49601**
28711	12	**28811**	36	12 x14	3/4	20	**49601**
28713	14	**28813**	42	14 x14	3/4	20	**49601**
28715	18	**28815**	55	16 x 16	3/4	20	**49601**
28722	16	**28822**	48	12 x 14	1	25	**49612**
28724	19	**28824**	56	14 x 14	1	25	**49612**
28726	24	**28826**	73	16 x 16	1	25	**49612**
28719	23	**28819**	68	20 x 16	3/4	20	**49601**
28727	38	**28827**	114	20 x 20	1	25	**49612**
28731	11	**28831**	32	15 x 10	3/4	16	**49608**
—	—	**28801**	80	16 x 16	1 1/8	20	**49602**

- Machined to close tolerances
- Repeatability ±0.0005" or better
- Reduces fixture set-up and assembly time
- Provided with 5/8" bored holes for sine fixture keys
- For horizontal or vertical machining centers, Tool Room Mills, or multiple pallet machining centers

Custom Sizes Available
Jergens will make Ball Lock® fixture plate or subplates to your specifications. Call 1-877-426-2504 for further information.

15x10x3/4" Fixture Plate Bridgeport™ Style

Aluminum Plate Part Number	Wt. (lbs)
28731	11

Steel Plate Part Number	Wt. (lbs)
28831	32

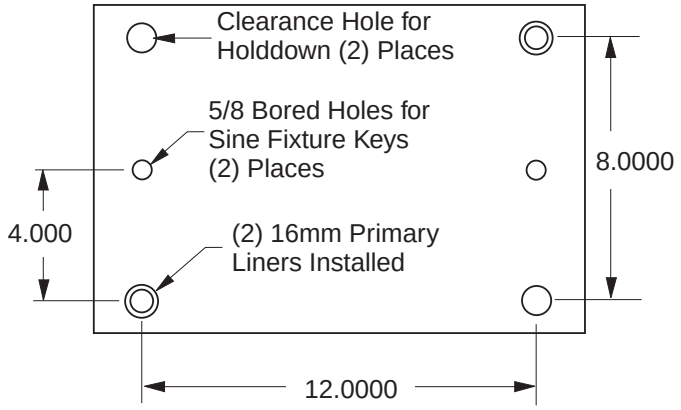

12x14x3/4" Fixture Plate

Aluminum Plate Part Number	Wt. (lbs)
28711	12

Steel Plate Part Number	Wt. (lbs)
28811	36

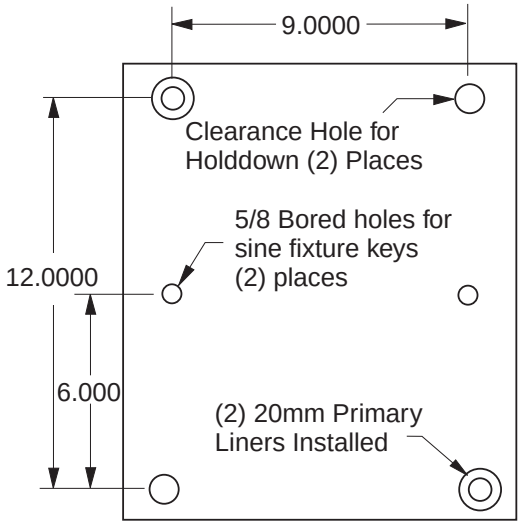

Ball Lock® T-Columns

- Class 40 Cast Iron
- Also available in Aluminum
- Ball Lock® Receiver Bushings and Liner Bushings installed
- Perpendicularity is 0.001" per foot

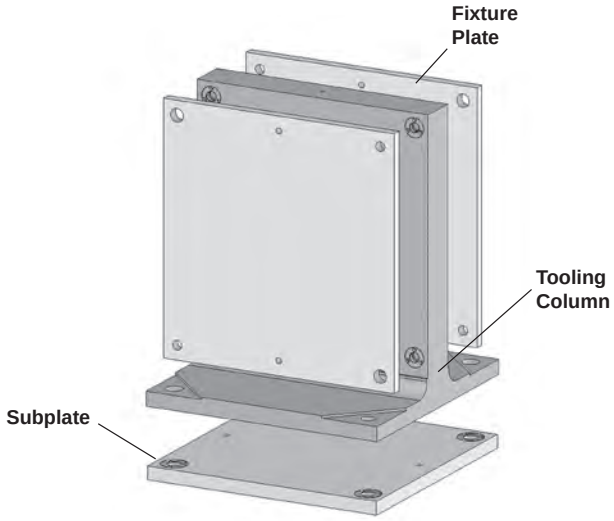

Custom Sizes Available with or without Ball Lock®
We are able to quote you on your special requirement with or without the Ball Lock® Mounting System. Call 1-877-426-2504 for design specification information.

Cast Iron T-Columns With Ball Lock® Receiver Bushings Installed

See page 16 for Fixture Plates and Subplates

Pallet Size (mm)	Part Number	C	D	E	F	G	H	I	J	K	L	M	N	O (mm)	P (mm)	Wt. (lbs)
400	**69101**	16.375	1	16	16	14	14	14	14	4	19.875	4.875	3.5	20	20	425
500	**69111**	22.375	1	20	20	19	17	17	17	4.7	25.875	5.375	3.5	25	25	700
630	**69121**	26.375	1.5	25	25	23	22	21	21	4	29.875	5.375	3.5	35	25	1125

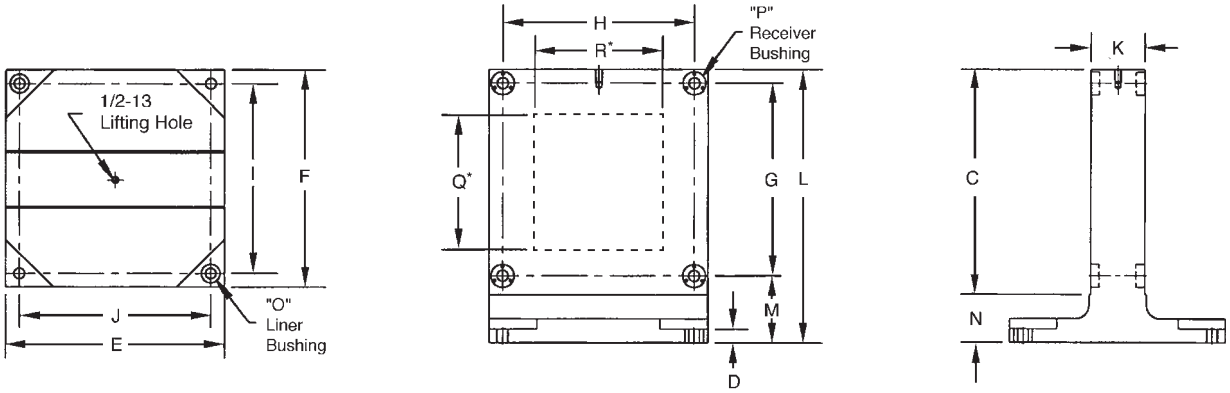

***Note**: Window sections are also available on T-Columns. Specify window size and location (Q and R Dimensions).

Corresponding Fixture Plates, Subplates and Ball Lock® Shanks

Pallet Size (mm)	T-Column Part Number	Aluminum Fixture Plate Part Number	Steel Fixture Plate Part Number	Fixture Plate Size	Fixture Plate Ball Lock® Shank Part Number	Shank Size	Subplate Part Number	Subplate Ball Lock® Shank Part Number	Shank Size
400	**69101**	**28717**	**28817**	16 x 16	**49601**	20mm x 3/4	**49102**	**49602**	20mm x 1
500	**69111**	**28745**	**28845**	20 x 22	**49612**	25mm x 1	**49103**	**49612**	25mm x 1
630	**69121**	**28746**	**28846**	25 x 26	**49612**	25mm x 1	**49104**	**49633**	35mm x 1-1/2

Use Hoist Ring **23411,** see Lifting Solutions Catalog or Master Catalog for lifting and handling – Order separately.

Engineering Changes

Product improvement is a continuing process at Jergens. Specifications and engineering data are subject to change after publishing. Contact Jergens Technical Sales Department to verify any dimensions or specifications.

Ball Lock® 4-Sided Tooling Columns

- Class 40 Cast Iron
- Also available in Aluminum
- Ball Lock® Receiver Bushings and Liners installed
- Provides accurate fixturing base for CNC machining centers
- Perpendicularity is 0.001" per foot

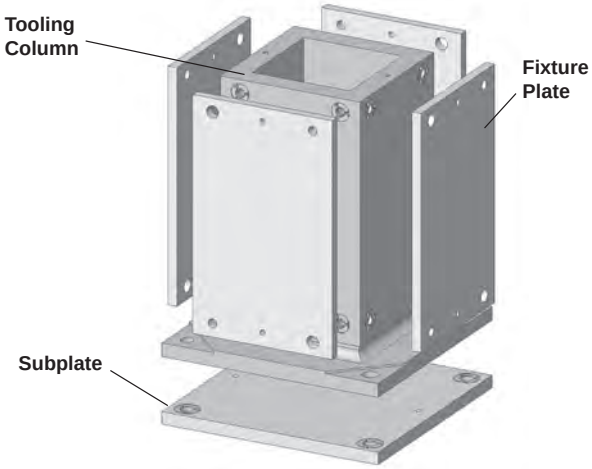

Custom Sizes Available with or without Ball Lock®
We are able to quote you on your special requirement with or without the Ball Lock® Mounting System. Call 1-877-426-2504 for design specification information.

Cast Iron 4-Sided Tooling Columns With Ball Lock® Receiver Bushings Installed

See page 16 for Fixture Plates and Subplates

Pallet Size (mm)	Part Number	A	B	C	D	E	F	G	H	I	J	K	L	M	N	O (mm)	P (mm)	Wt. (lbs)
400	**69001**	10	10	20	1	16	16	18	6.75	14	14	1.75	23.875	4.875	3.875	20	20	510
500	**69011**	12	12	25	1	20	20	22	8	17	17	1.625	28.875	5.375	3.875	25	25	736
630	**69021**	16	16	26	1.5	25	25	23	11.50	21	21	2	29.875	5.375	3.875	35	25	1122

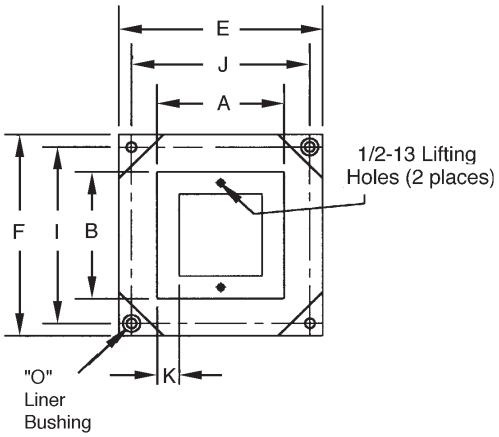

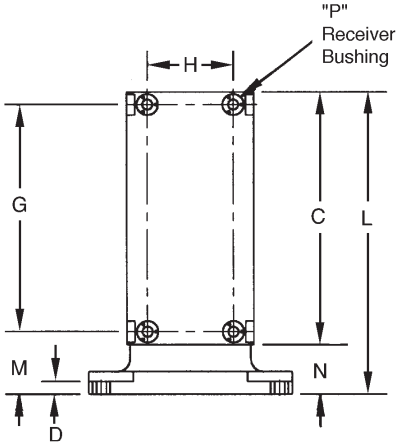

Corresponding Fixture Plates, Subplates and Ball Lock® Shanks

Pallet Size (mm)	T-Column Part Number	Aluminum Fixture Plate Part Number	Steel Fixture Plate Part Number	Fixture Plate Size	Fixture Plate Ball Lock® Shank Part Number	Shank Size	Subplate Part Number	Subplate Ball Lock® Shank Part Number	Shank Size
400	**69001**	**28741**	**28841**	10 x 20	**49601**	20mm x 3/4	**49102**	**49602**	20mm x 1
500	**69011**	**28742**	**28842**	12 x 25	**49612**	25mm x 1	**49103**	**49612**	25mm x 1
630	**69021**	**28743**	**28843**	16 x 26	**49612**	25mm x 1	**49104**	**49633**	35mm x 1-1/2

Use Hoist Ring **23411,** see Lifting Solutions Catalog or Master Catalog for lifting and handling – Order separately.

Engineering Changes
Product improvement is a continuing process at Jergens. Specifications and engineering data are subject to change after publishing. Contact Jergens Technical Sales Department to verify any dimensions or specifications.

Subplates For Tooling Columns and Fixture Plates

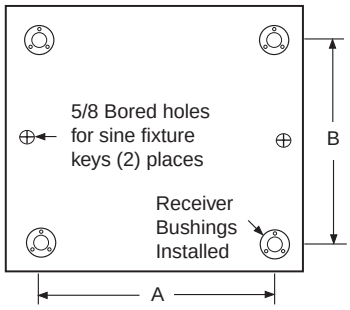

Standard Steel Subplates for Tooling Columns

Subplate Mounting holes can be provided per customer specification.
Supplied with Ball Lock® Receiver Bushings installed.

Part Number	Pallet Size (mm)	For Tooling Columns	Ball Lock® Pattern A (in.)	Ball Lock® Pattern B (in.)	Receiver Size (mm)	Thickness of Subplate (in.) ±0.005	Wt (lbs)
49102	400	**69001, 69101**	14	14	20	1 1/8	79
49103	500	**69011, 69111**	17	17	25	1 1/4	137
49103-C*	500	**69101, 69001**	14/17	14/17	20/25	1 1/4	137
—	—	**69111, 69011**	Dual	Dual	Dual	1 1/4	—
49104	630	**69021, 69121**	21	21	35	1 3/8	240

*49103-C is a dual pattern subplate. Please contact Jergens Technical Service at 1-877-426-2504 for design specific information.

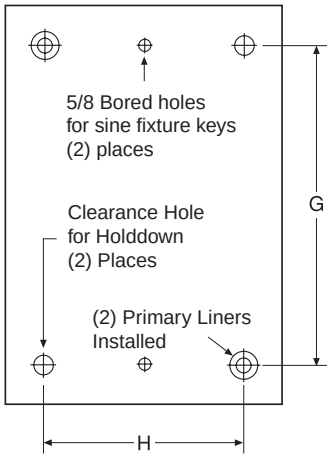

Fixture Plates for Standard Tooling Columns and T-Columns

Supplied with 2 primary Ball Lock® Liner Bushings installed.

Pallet Size (mm)	Part Number Aluminum	(lbs)	Part Number Steel	(lbs)	For Tooling Columns	Type	Fixture Plate Size (in.)	Fixture Plate Thickness ±0.005"	Ball Lock® Pattern H (In.)	Ball Lock® Pattern G (In.)	Liner Size (mm)
400	**28741**	14	**28841**	43	**69001**	4-S	10x20	3/4	6.75	18	20
500	**28742**	28	**28842**	85	**69011**	4-S	12x25	1	8	22	25
630	**28743**	39	**28843**	118	**69021**	4-S	16x26	1	11.50	23	25
400	**28717**	18	**28817**	55	**69101**	T	16x16	3/4	14	14	20
500	**28745**	41	**28845**	125	**69111**	T	20x22	1	17	19	25
630	**28746**	61	**28846**	184	**69121**	T	25x26	1	22	23	25

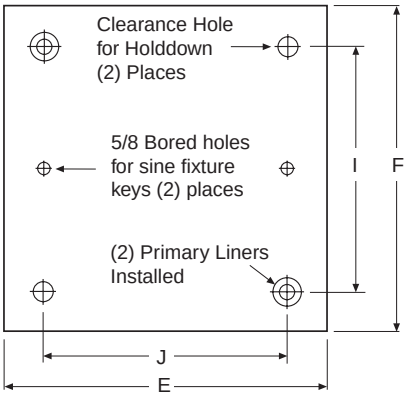

Fixture Plates for Tooling Column Subplates

Supplied with 2 primary Ball Lock® Liner Bushings installed.

Pallet Size (mm)	Part Number Aluminum	(lbs)	Part Number Steel	(lbs)	For Subplate	Plate Dim. E (In.)	Plate Dim. F (in.)	Fixture Plate Thickness ±0.005"	Ball Lock® Pattern I (In.)	Ball Lock® Pattern J (In.)	Liner Size (mm)
400	**28717**	18	**28817**	55	**49102**	16	16	3/4	14	14	20
500	**28727**	38	**28827**	114	**49103**	20	20	1	17	17	25
630	**28732**	58	**28832**	177	**49104**	25	25	1	21	21	35

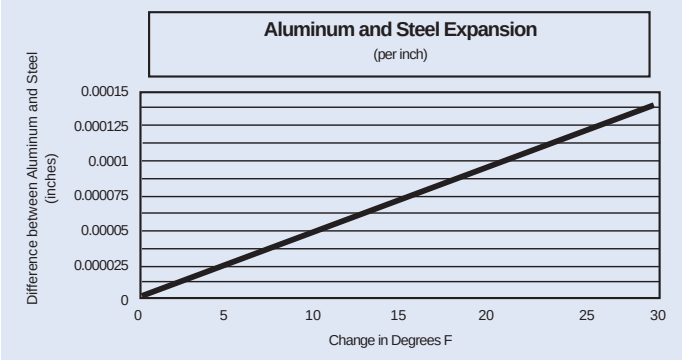

NOTE: Aluminum and steel expand at different rates. Please take this information into consideration when creating your own Ball Lock® fixture and subplates.

Quick Change Kits

The Jergens Ball Lock® Quick Change Kits speed fixture changeover in all types of manufacturing operations. Each kit includes two aluminum fixture plates with two primary liner bushings installed; one steel subplate with receiver bushings installed, and four 20mm Ball Lock® shanks with working loads of 3000 lbs. each. While one fixture plate is on the machine, the operator can load parts on the other. This minimizes downtime for true set-up reduction. To enable the subplate to be mounted on a slotted table without the need to indicate the subplate, sine fixture keys can be used. The sine fixture key bored holes are oriented parallel to the receiver bushings on the subplate and to the liner bushings on the fixture plate. These also allow the fixture plate to be mounted on a toolroom mill without the need to indicate it. This is extremely useful when machining location points on your fixture.

Ball Lock® MOUNTING SYSTEM

Everything You Need to Change Fixtures in Less Than One Minute

Aluminum Fixture Plate

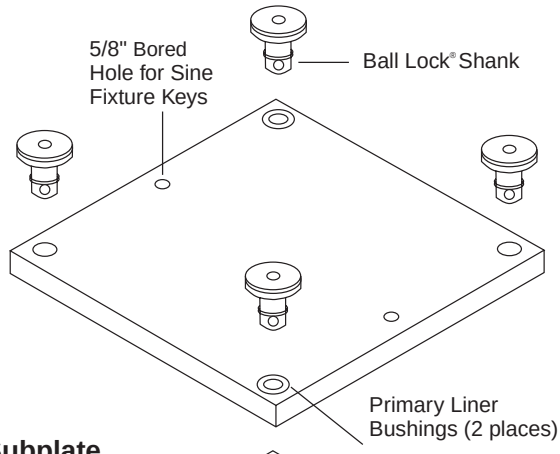

Steel Subplate

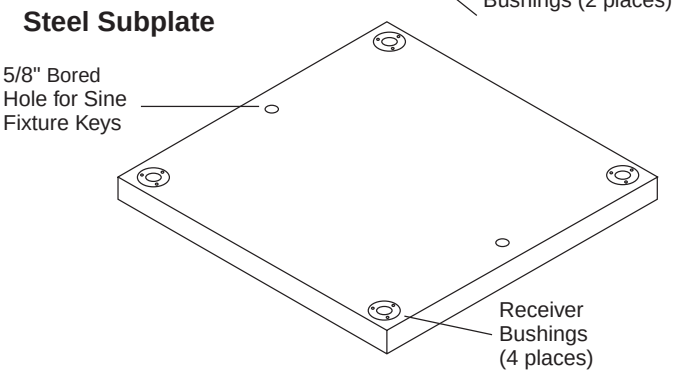

Quick Change Kits

Part No.	Kit Includes
49001	2 - 28713 (14"x14"x3/4") aluminum fixture plates with 20mm liner bushings installed 1 - 49101 (16"x16"x1-1/8") steel subplate with receiver bushings installed 4 - 49601 (20mm) Ball Lock® Shanks
49002	2 - 28715 (16"x16"x3/4") aluminum fixture plates with 20mm liner bushings installed 1 - 49101 (16"x16"x1-1/8") steel subplate with receiver bushings installed 4 - 49601 (20mm) Ball Lock® Shanks
49004	Bridgeport™-Style 2 - 28731 (10"x15"x3/4") aluminum fixture plates with 16mm liner bushings installed 1 - 49121 (10"x15"x3/4") steel subplate with receiver bushings installed 4 - 49608 (16mm) Ball Lock® Shanks

Pre-Engineered Ball Lock® Fixture Kits for HAAS*

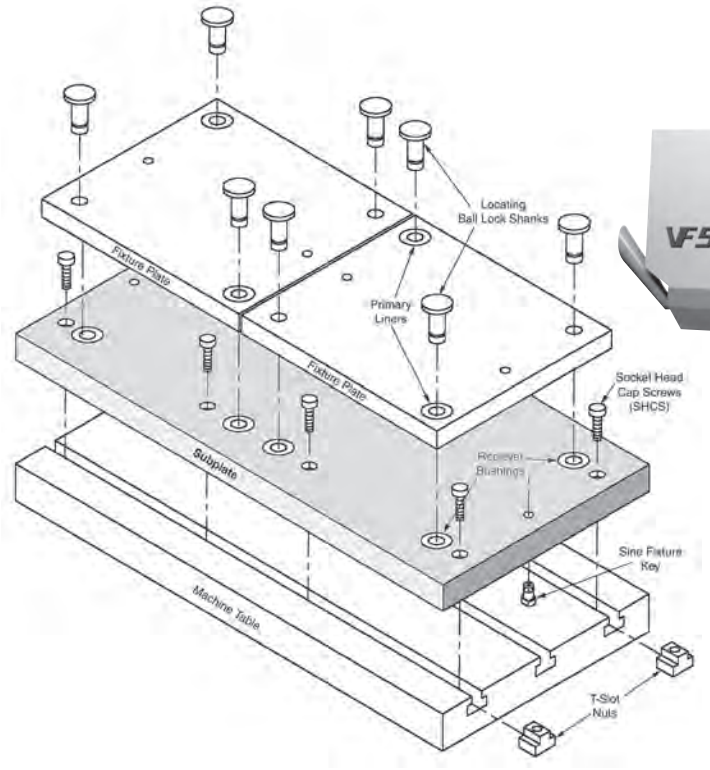

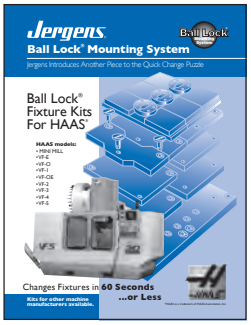

Pre-Engineered HAAS Kits available. PDF Catalog Available at www.jergensinc.com

These kits include:

- Steel Subplate with receiver bushings
- Aluminum Fixture Plate(s) with 2 primary liner bushings
- Pre installed receiver and Liner Bushings
- Ball Lock® Shanks
- T-Slot nuts for mounting subplate to machine table
- 2 Sine Fixture Keys for accurate subplate locating
- Socket head cap screws

Benefits:

- Save time specifying and ordering
- Saves installation time and cost
- Eliminates potential installation errors

Try the Ball-Lock® Wizard Configurator for Customized Workholding Solutions
http://jergens.configurators.com

Ask about these other machine manufacturers where Ball Lock® kits can be utilized.

Call customer support at 1-877-426-2504

Acer	Fanuc Robodrill	Kira Mill	Miyano
Bridgeport	HAAS	Kitamura	Mori-Seiki
Brother	Hardinge	Leadwell	OKK
Chevalier	Hitachi	MAG	Okuma
Chiron	Hitachi Seiki	Makino	Republic Lagun
DMG	Hurco	Matsuura	Toyoda
Enshu	Hyundai-Kia	Mazak	Tree
Excel	Johnsford	Milltronics	YCI

*HAAS is a trademark of HAAS Automation, Inc.

Set-Up Reduction Worksheet

Benefits of Set-Up Reduction (Capacity)

Current Method		Example (actual case study):
Minutes per set-up	=_____ minutes	60 minutes
Number of set-ups per 8 hour shift	=_____ set-ups	1.5 set-ups
Total minutes of set-up per shift (set-up minutes x number of set-ups)	=_____ minutes	90 minutes

Using the Ball Lock® System		
Minutes per set-up	=_____ minutes	8 minutes
Number of set-ups per 8 hour shift	=_____ set-ups	1.5 set-ups
Total minutes of set-up per shift (set-up minutes x number of set-ups)	=_____ minutes	12 minutes
Increased capacity per machine per shift (current method – Ball Lock® method)	=_____ minutes	78 minutes
Savings per machine per shift	=_____ minutes	78 minutes
Increased capacity (number of minutes / 60)	=_____ hours	1.3 hours

Benefits of Set-Up Reduction (Profit)		
Machine cost per hour	= $_____	$80.00
Increased production hours per shift (increased capacity from above)	=_____ hours	1.3 hours
Savings (profit) per machine per shift (machine cost per hour x increased production hours)	= $_____ per machine per shift	$104.00 per machine per shift

Ball Lock® For 4th Axis Rotary Indexers

Problem:
Rotary indexers increase the versatility of vertical machining centers, yet they offer one major challenge: set-up is so time-consuming that it may limit a machine's flexibility. In many cases, machinists dedicate their 4th Axis tool to a single machine to avoid the agony of an extended set-up and changeover.

Benefits:
- Maximize indexer utilization
- Eliminate lengthy set-ups
- Accurate fixture plate changover in seconds

Jergens' Solution:
Ball Lock® Mounting System for Indexers provides a double solution.

First, Ball Lock® mounting plates free up your machine for additional work by allowing a fast and accurate installation and removal of the complete indexer. Avoid hours of set up. The Ball Lock® System does it in minutes, with repeatability at ±0.0005" (±0.013mm). Low profile, positive clamping, proven in over many years of field use.

Second, the Ball Lock® System provides your fixture plate changeover. By mounting the round subplate to the indexer faceplate, you'll "plug-in" new fixtures in record time (less than 60 seconds).

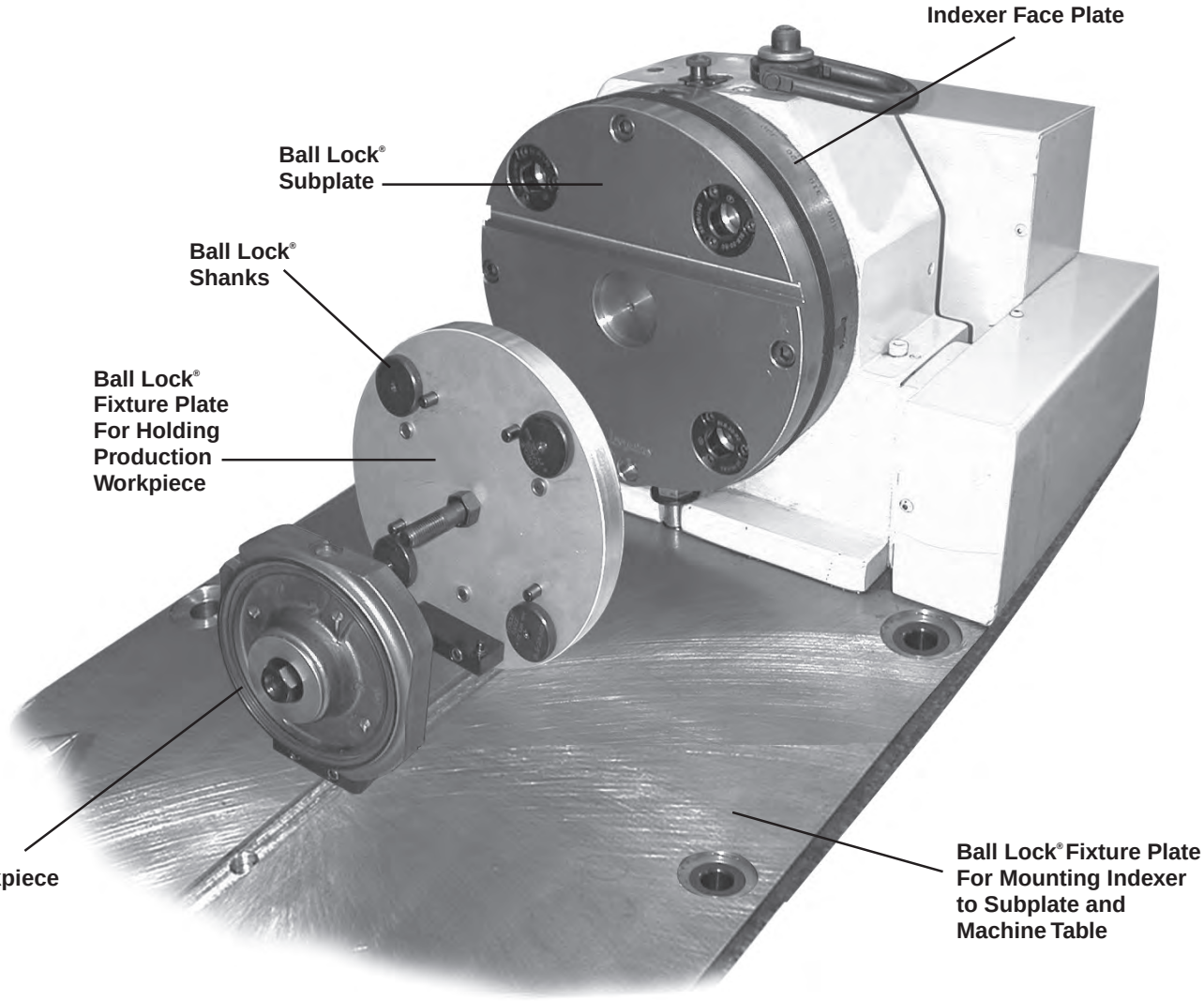

Subplates and fixture plates come with bushings pre-installed.

Round Ball Lock® Fixture Plates and Subplates

Standard Round

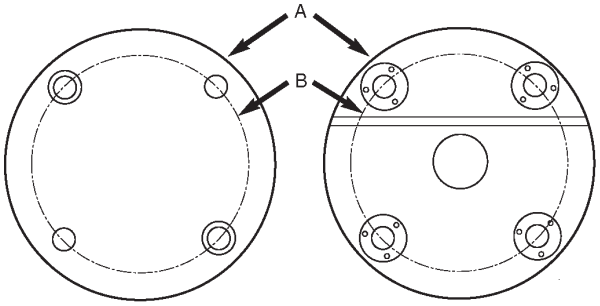

Fixture Plate Subplate

Cast Aluminum, FreeMax™ or Steel equivalent

Fixture Plate

Part No.	A	B	Thickness ±0.005"	Ball Lock® Liner	Ball Lock® Shank	Weight (lbs)
28707	8"	6"	3/4	16mm	**49608**	3.5
28708	10"	8"	1	20mm	**49602**	7.0
28709	12"	10"	1	20mm	**49602**	11.0

Subplate

Part No.	A	B	Thickness ±0.005"	Ball Lock® Receiver	Center Hole	Weight (lbs)
49107	8"	6"	3/4	16mm	1.00"	11.0
49108	10"	8"	1	20mm	2.00"	21.0
49109	12"	10"	1	20mm	2.00"	33.0

Metric sizes also available; please call for information.

Custom Round Plates

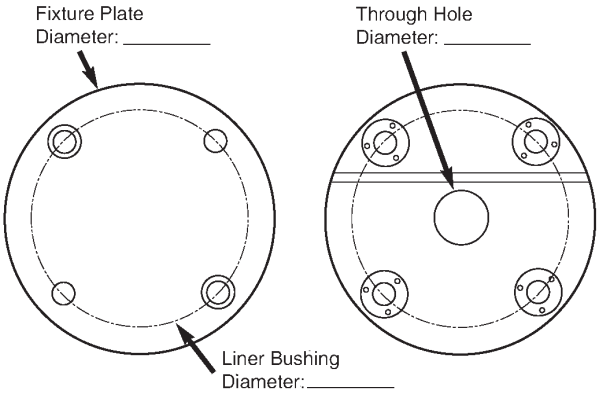

Indexer:

Make: _____

Model: _____

Diameter: _____

Light Duty or Heavy Duty: _____

Through Hole Bore: _____

CNC Machine:

Make: _____

Model: _____

Weight Capacity: _____

Indexer Faceplate:

T-Slot Size: _____

Configuration/Orientation: _____

or

Drilled Tapped Hole Size:

Configuration/Orientation: _____

Engineering Changes

Product improvement is a continuing process at Jergens. Specifications and engineering data are subject to change without notice. If current information is critical to your design, it is suggested that you contact Jergens Technical Sales Department to verify any dimensions or specifications.

Locating and Clamping Shanks

- Material: Shank/Bushing, 4340
  Liner, 52100
- Finish: Black Oxide
- Heat Treat: Shanks, RC 40-45
  Bushings, RC 50-54
  Liners, RC 62-64
- Operating Temperature Range
  -20° to 400°F, -30° to 200°C

Stainless Steel available.

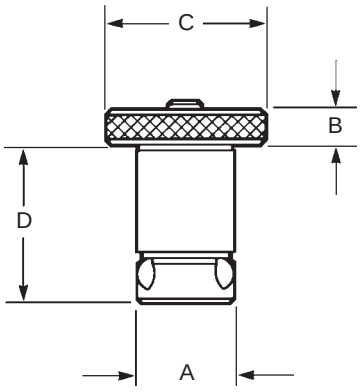

Ball Lock® Repair Kits

Each Kit Includes:
- Replacement Screw
- Locking Balls
- Drive Ball
- O-Ring

Any Ball Lock® application requires at least two sets of shanks, receiver bushings and liners. The liners are placed into the fixture plate to insure extremely accurate positioning. If more than two shanks are required (to provide additional hold down force), omit the liner bushing so that these additional holes will not interfere with your primary locating holes.

See page 26 for Fast Acting Shanks.

Locating and Clamping Shank Dimensions

Shank Diameter (mm) A	Fixture Plate Thickness ±0.005	Shank Part Number	Head of Shank		Length Under Head D	Hex Wrench Size for Set Screw	Maximum		Recommended		Shank Repair Kit Part Number
			Height B	Diameter C			Screw Torque (Ft/lb)	Hold-Down Force (lbs)	Screw Torque (Ft/lb)	Hold-Down Force (lbs)	
13	0.50	**49605**	0.25	0.87	1.08	3/32	1.2	750	1	625	**49905**
—	0.75	**49606**	—	—	1.33	—	—	—	—	—	**49906**
16	0.50	**49607**	0.32	1.50	1.15	1/8	3	1200	2	800	**49907**
—	0.75	**49608**	—	—	1.40	—	—	—	—	—	**49908**
20	0.75	**49601**	0.38	1.75	1.53	1/8	4	3000	3	2250	**49901**
—	1.00	**49602**	—	—	1.78	—	—	—	—	—	**49902**
25	0.75	**49611**	0.38	2.00	1.70	5/32	9	7000	7	5444	**49911**
—	1.00	**49612**	—	—	1.95	—	—	—	—	—	**49912**
30	0.75	**49621**	0.50	2.25	1.88	3/16	15	10000	12	8000	**49921**
—	1.00	**49622**	—	—	2.13	—	—	—	—	—	**49922**
35	0.75	**49631**	0.50	2.25	1.97	1/4	25	15500	19	11780	**49931**
—	1.00	**49632**	—	—	2.22	—	—	—	—	—	**49932**
—	1.50	**49633**	—	—	2.72	—	—	—	—	—	**49933**
—	2.00	**49634**	—	—	3.22	—	—	—	—	—	**49934**
50	0.75	**49641**	0.75	3.00	2.45	3/8	50	20000	38	15200	**49941**
—	1.00	**49642**	—	—	2.70	—	—	—	—	—	**49942**
—	1.50	**49643**	—	—	3.20	—	—	—	—	—	**49943**
—	2.00	**49644**	—	—	3.70	—	—	—	—	—	**49944**

Receiver Bushings

Face Mount

Back Mount

Two styles of receiver bushings are available. Generally, the face mount receiver bushing is utilized in blind hole applications (Slip Fit). The back mount receiver bushing is used in through hole applications (Light Press Fit).

Note: Installed bushings should be approximately .012" below subplate surface.
See reference below for installation of back mount style bushings.

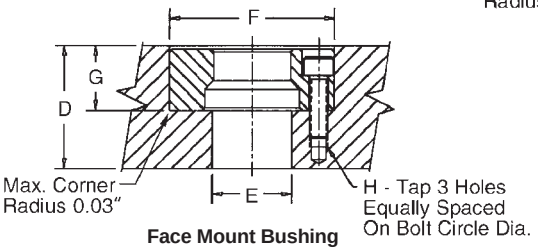

Face Mount Bushing Installation Instructions

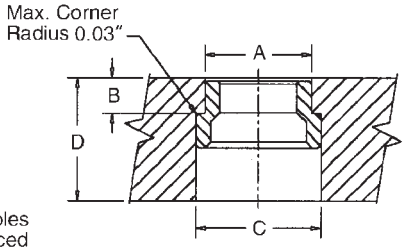

Back Mount Bushing Installation Instructions

Installation Dimensions

Face Mount

Shank Dia. (mm)	Face Mount Part Number	Actual O.D. +0.0000 -0.0004	Clearance Drill Diameter E	Bore +0.0005 -0.0000 F	Depth +0.002 -0.000 G	Tap Size & Depth[1] H	Bolt Circle Diameter 3 PL Equally Spaced	Min. Subplate Thickness D
13	**49506**	1.3750	11/16	1.3750	0.469	8-32x5/16	0.984	3/4
16	**49507**	1.4370	13/16	1.4370	0.469	8-32x5/16	1.125	3/4
20	**49501**	1.6873	13/16	1.6873	0.637	10-32x3/8	1.362	1
25	**49502**	2.0623	1	2.0623	0.799	1/4-28x1/2	1.644	1-1/4
30	**49503**	2.2654	1 3/16	2.2654	0.871	1/4-28x3/4	1.876	1-3/8
35	**49504**	2.6873	1 9/16	2.6873	0.904	5/16-24x7/8	2.178	1-1/2
50	**49505**	3.4998	2 5/32	3.4998	1.239	3/8-24x1	2.916	2

[1]Cap Screws Supplied with Face Mount Bushings.

Back Mount

Shank Dia. (mm)	Back Mount Part Number	Actual O.D. +0.0000 -0.0004 A	Depth +0.000 -0.002 B	C-Bore ±0.006 C	Min. Subplate Thickness D
13	**49516**	0.7870	.277	1.000	3/4
16	**49517**	0.8760	.285	1.155	3/4
20	**49511**	1.0950	.345	1.280	7/8
25	**49512**	1.3763	.416	1.593	1
30	**49513**	1.6264	.432	1.906	1-1/4
35	**49514**	1.8764	.493	2.155	1-5/16
50	**49515**	2.6269	.621	2.988	1-3/4

Liner Bushings for Fixture Plates

Locating repeatability will determine if one primary and one secondary or two primary liners are needed. With two primary liners, repeatability of ±0.0005" can be maintained if the two holes for receiver bushings are held to a centerline distance of ±0.0002" tolerance.

Note on Installation of Press Fit Liners & Back Mount Style Receiver Bushings:
To alleviate the possibility of binding the shank in the bore, the maximum interference fit between bore and bushing O.D. should not exceed .0005".

Liner Dimensions

Fixture Plate Thickness ±0.005	Shank Diameter (mm)	Primary Liner Part Number	Secondary Liner Part Number	Liner O.D. +0.0000 -0.0004
.50	13	**49705**	**49805**	0.7518
.75	13	**49706**	**49806**	0.7518
.50	16	**49707**	**49807**	1.0018
.75	16	**49708**	**49808**	1.0018
.75	20	**49701**	**49801**	1.3772
1.00	20	**49702**	**49802**	1.3772
.75	25	**49711**	**49811**	1.3772
1.00	25	**49712**	**49812**	1.3772
.75	30	**49721**	**49821**	1.7523

Fixture Plate Thickness ±0.005	Shank Diameter (mm)	Primary Liner Part Number	Secondary Liner Part Number	Liner O.D. +0.0000 -0.0004
1.00	30	**49722**	**49822**	1.7523
.75	35	**49731**	**49831**	1.7523
1.00	35	**49732**	**49832**	1.7523
1.50	35	**49733**	**49833**	1.7523
2.00	35	**49734**	**49834**	1.7523
.75	50	**49741**	**49841**	2.5025
1.00	50	**49742**	**49842**	2.5025
1.50	50	**49743**	**49843**	2.5025
2.00	50	**49744**	**49844**	2.5025

Stainless Steel Locating and Clamping Shanks

- Material: 17-4 PH Stainless Steel
- Heat Treat: Rc 40-45

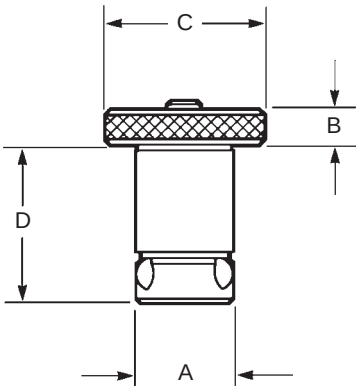

Ball Lock® Repair Kits

Each Kit Includes:
- Replacement Screw
- Locking Balls
- Drive Ball
- O-Ring

Any Ball Lock® application requires at least two sets of shanks, receiver bushings and liners. The liners are placed into the fixture plate to insure extremely accurate positioning. If more than two shanks are required (to provide additional hold down force), omit the liner bushing so that these additional holes will not interfere with your primary locating holes.

Stainless Steel Locating and Clamping Shank Dimensions

Shank Diameter (mm) A	Fixture Plate Thickness ±0.005	Shank Part Number	Head of Shank		Length Under Head D	Hex Wrench Size for Set Screw	Maximum		Recommended		Shank Repair Kit Part Number
			Height B	Diameter C			Screw Torque (Ft/lb)	Hold-Down Force (lbs)	Screw Torque (Ft/lb)	Hold-Down Force (lbs)	
13	0.50	**49605SS**	0.25	0.87	1.08	3/32	1.2	750	1	625	**49905SS**
—	0.75	**49606SS**	—	—	1.33	—	—	—	—	—	**49906SS**
16	0.50	**49607SS**	0.32	1.50	1.15	1/8	3	1200	2	800	**49907SS**
—	0.75	**49608SS**	—	—	1.40	—	—	—	—	—	**49908SS**
20	0.75	**49601SS**	0.38	1.75	1.53	1/8	4	3000	3	2250	**49901SS**
—	1.00	**49602SS**	—	—	1.78	—	—	—	—	—	**49902SS**
25	0.75	**49611SS**	0.38	2.00	1.70	5/32	9	7000	7	5444	**49911SS**
—	1.00	**49612SS**	—	—	1.95	—	—	—	—	—	**49912SS**
30	0.75	**49621SS**	0.50	2.25	1.88	3/16	15	10000	12	8000	**49921SS**
—	1.00	**49622SS**	—	—	2.13	—	—	—	—	—	**49922SS**
35	0.75	**49631SS**	0.50	2.25	1.97	1/4	25	15500	19	11780	**49931SS**
—	1.00	**49632SS**	—	—	2.22	—	—	—	—	—	**49932SS**
—	1.50	**49633SS**	—	—	2.72	—	—	—	—	—	**49933SS**
—	2.00	**49634SS**	—	—	3.22	—	—	—	—	—	**49934SS**
50	0.75	**49641SS**	0.75	3.00	2.45	3/8	50	20000	38	15200	**49941SS**
—	1.00	**49642SS**	—	—	2.70	—	—	—	—	—	**49942SS**
—	1.50	**49643SS**	—	—	3.20	—	—	—	—	—	**49943SS**
—	2.00	**49644SS**	—	—	3.70	—	—	—	—	—	**49944SS**

Stainless Steel Receiver Bushings

Face Mount

Back Mount

Two styles of receiver bushings are available. Generally, the face mount receiver bushing is utilized in blind hole applications (Slip Fit). The back mount receiver bushing is used in through hole applications (Light Press Fit).

Note: Installed bushings should be approximately .012" below subplate surface.

See reference below for installation of back mount style bushings.

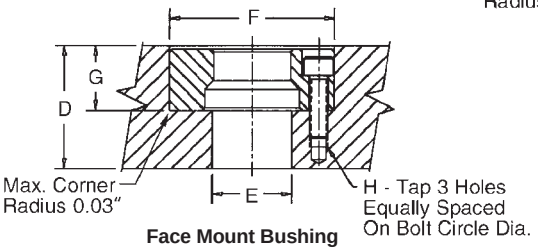

Face Mount Bushing Installation Instructions

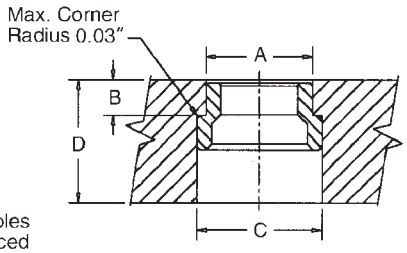

Back Mount Bushing Installation Instructions

Installation Dimensions

Face Mount

Shank Dia. (mm)	Face Mount Part Number	Actual O.D. +0.0000 -0.0004	Clearance Drill Diameter E	Bore +0.0005 -0.0000 F	Depth +0.002 -0.000 G	Tap Size & Depth[1] H	Bolt Circle Diameter 3 PL Equally Spaced	Min. Subplate Thickness D
13	**49506SS**	1.3750	11/16	1.3750	0.469	8-32x5/16	0.984	3/4
16	**49507SS**	1.4370	13/16	1.4370	0.469	8-32x5/16	1.125	3/4
20	**49501SS**	1.6873	13/16	1.6873	0.637	10-32x3/8	1.362	1
25	**49502SS**	2.0623	1	2.0623	0.799	1/4-28x1/2	1.644	1-1/4
30	**49503SS**	2.2654	1 3/16	2.2654	0.871	1/4-28x3/4	1.876	1-3/8
35	**49504SS**	2.6873	1 9/16	2.6873	0.904	5/16-24x7/8	2.178	1-1/2
50	**49505SS**	3.4998	2 5/32	3.4998	1.239	3/8-24x1	2.916	2

[1]Cap Screws Supplied with Face Mount Bushings.

Back Mount

Shank Dia. (mm)	Back Mount Part Number	Actual O.D. +0.0000 -0.0004 A	Depth +0.000 -0.002 B	C-Bore ±0.006 C	Min. Subplate Thickness D
13	**49516SS**	0.7870	.277	1.000	3/4
16	**49517SS**	0.8760	.285	1.155	3/4
20	**49511SS**	1.0950	.345	1.280	7/8
25	**49512SS**	1.3763	.416	1.593	1
30	**49513SS**	1.6264	.432	1.906	1-1/4
35	**49514SS**	1.8764	.493	2.155	1-5/16
50	**49515SS**	2.6269	.621	2.988	1-3/4

Stainless Steel Liner Bushings for Fixture Plates

Locating repeatability will determine if one primary and one secondary or two primary liners are needed. With two primary liners, repeatability of ±0.0005" can be maintained if the two holes for receiver bushings are held to a centerline distance of ±0.0002" tolerance.

Note on Installation of Press Fit Liners & Back Mount Style Receiver Bushings:
To alleviate the possibility of binding the shank in the bore, the maximum interference fit between bore and bushing O.D. should not exceed .0005".

Liner Dimensions

Fixture Plate Thickness ±0.005	Shank Diameter (mm)	Primary Liner Part Number	Secondary Liner Part Number	Liner O.D. +0.0000 -0.0004
.50	13	**49705SS**	**49805SS**	0.7518
.75	13	**49706SS**	**49806SS**	0.7518
.50	16	**49707SS**	**49807SS**	1.0018
.75	16	**49708SS**	**49808SS**	1.0018
.75	20	**49701SS**	**49801SS**	1.3772
1.00	20	**49702SS**	**49802SS**	1.3772
.75	25	**49711SS**	**49811SS**	1.3772
1.00	25	**49712SS**	**49812SS**	1.3772
.75	30	**49721SS**	**49821SS**	1.7523

Fixture Plate Thickness ±0.005	Shank Diameter (mm)	Primary Liner Part Number	Secondary Liner Part Number	Liner O.D. +0.0000 -0.0004
1.00	30	**49722SS**	**49822SS**	1.7523
.75	35	**49731SS**	**49831SS**	1.7523
1.00	35	**49732SS**	**49832SS**	1.7523
1.50	35	**49733SS**	**49833SS**	1.7523
2.00	35	**49734SS**	**49834SS**	1.7523
.75	50	**49741SS**	**49841SS**	2.5025
1.00	50	**49742SS**	**49842SS**	2.5025
1.50	50	**49743SS**	**49843SS**	2.5025
2.00	50	**49744SS**	**49844SS**	2.5025

Accessories

Tapered Caps and Plugs

Keep debris out of your subplate's receiver bushings when not in use. Polyethylene caps snap in and out easily.

Packaged 10 per pack.

Receiver Bushing Diameter	Part Number
13	**49201**
16	**49202**
20	**49203**
25	**49204**
30	**49205**
35	**49206**
50	**49207**

Lifting Handles

For easy handling of fixture plates up to 500 lbs.

Part Number	Length	Ht.	W	Mounting Distance
33701	4.21	1.42	0.83	3.68

Sine Fixture Keys

Locate subplates or fixture plates to slotted machine tables without having to slot the plate. Available in inch sizes from 1/2" to 7/8" slots, and in metric sizes from 14mm to 22mm slots. NOTE: See page 221 for dimensions.

Part Number	A +0.000 -0.0005	B Table Slot Size +0.000 -0.0005	C	Part Number	A +0.000 -0.0005	B Table Slot Size (mm) +0.000 -0.013	C
39501	.625	1/2	1	**39552**	.625	14	1
39502	.625	9/16	1	**39553**	.625	16	1
39503	.625	5/8	1	**39554**	.625	18	1
39504	.625	11/16	1	**39555**	.625	20	1-1/8
39505	.625	3/4	1-1/8	**39556**	.625	22	1-1/8
39506	.625	13/16	1-1/8	—	—	—	—
39507	.625	7/8	1-1/8	—	—	—	—

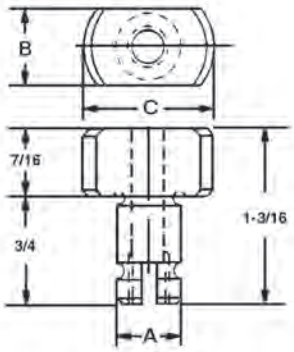

Fast Acting Ball Lock® Shanks

Ball Lock® Shank Diameter (mm)	Fixture Plate Thickness (in.)	FAST ACTING: Jergens Ball Lock® Shank w/Jergens Thumb Screw — Part Number: Assembly	T-Screw	Jergens Ball Lock® Shank Adjustable Handle — Part Number: Assembly	Handle
13	1/2	**49605-S**	43900	N/A	—
—	3/4	**49606-S**	43900	N/A	—
16	1/2	**49607-S**	**43904**	**49607-H**	**34314**
—	3/4	**49608-S**	**43904**	**49608-H**	**34315**
20	3/4	**49601-S**	**43904**	**49601-H**	**34315**
—	1	**49602-S**	**43905**	**49602-H**	**34316**
25	3/4	**49611-S**	**43907**	**49611-H**	**34328**
—	1	**49612-S**	**43908**	**49612-H**	**34329**
30	3/4	**49621-S**	**43910**	**49621-H**	**34334**
—	1	**49622-S**	**43911**	**49622-H**	**34335**
35	3/4	**49631-S**	**43913**	**49631-H**	**34339**
—	1	**49632-S**	**43913**	**49632-H**	**34339**
—	1-1/2	**49633-S**	**43914**	N/A	—
—	2	**49634-S**	**43914**	N/A	—

Thumb Screw

- Fast acting thumb screws 2 1/2 turns. No tools needed.

Adjustable Handle

- Handle can be moved out of the work area to avoid interference.

Multi-Purpose Subplates

1000x500 Multi-Purpose Subplate

Part Number	Wt. (Kg)
59112	130

The Jergens Multi-Purpose Subplate accommodates a wide variety of fixture plates and vises. This versatility facilitates using the same VMC for diverse products in repetitive runs-long and short batch sizes.

- FreMax™ 15 Steel or Equivalent
- Thickness: 31.75mm ±0.13mm
- Parallel within 0.025mm

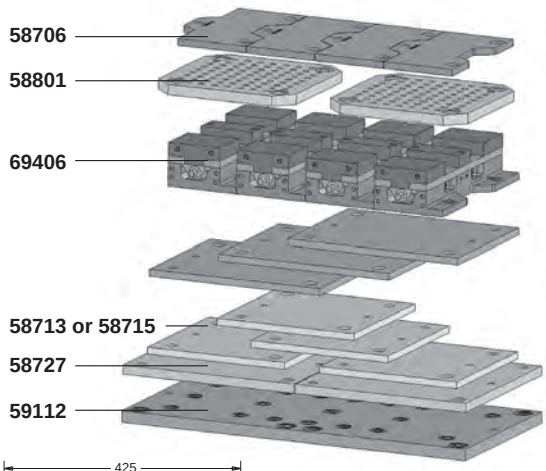

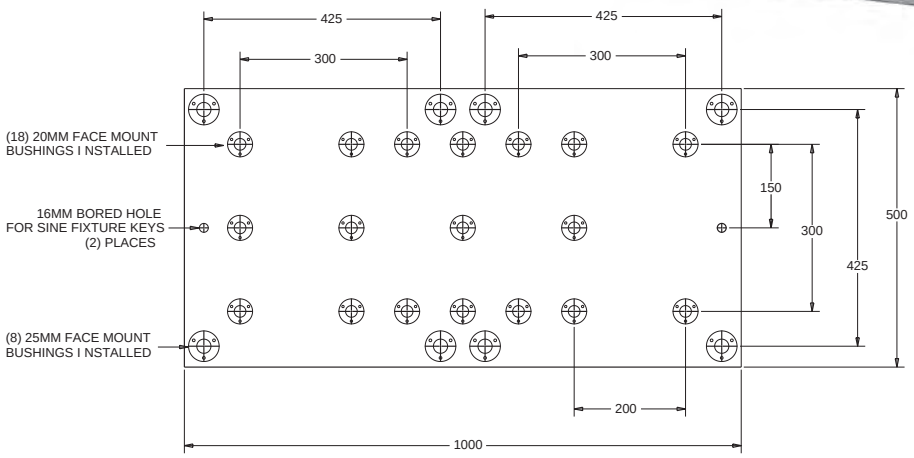

Fixture Plate Options for Multi-Purpose Subplates – Aluminum or Steel

Fixture Plate*/Vise Part Number	Thickness of Fixture Plate	Number of Fixture Plates/Vise That Mount on Multi-Purpose Subplate	Receiver Bushing Center Distance	Receiver Bushing Size	Required Ball Lock® Shank Part Number	Number of Shanks Required Per Fixture Plate/Vise
58713 (350 x 350) Fixture Plate	20mm	2	300 x 300	20 mm	**49651**	4
58715 (400 x 400) Fixture Plate	20mm	2	300 x 300	20 mm	**49651**	4
58801 (400 x 400) Modular Grid Plate	30mm**	2	300 x 300	20 mm	**49652**	4
58706 Jigsaw Interlocking Plate	20mm	4	300 x 200	20 mm	**49651**	3
58727 (500 x 500) Fixture Plate	25mm	2	425 x 425	25 mm	**49662**	4
69406 150mm Jigsaw Vise	20mm	4	300 x 200	20 mm	**49651**	3

* See next page for dimensional data on fixture plates. Part numbers shown for aluminum plates, also available in steel.
** Counterbored to 25mm at mounting holes.

Fixture Plates for Use on Multi-Purpose Subplate

350x350x20mm Fixture Plate

Aluminum Plate Part Number	Wt. (Kg)
58713	6

Steel Plate Part Number	Wt. (Kg)
58813	19

400x400 Fixture Plate

Aluminum Plate Part Number	Wt. (Kg)
58715	8

Steel Plate Part Number	Wt. (Kg)
58815	25

- Cast Aluminum or FreMax™ 15 Steel or equivalent
- Thickness: 20mm ±0.13mm
- Parallel within 0.025mm Steel
- Mounts to subplates with Ball Lock® Shank 49651 (20x20mm)

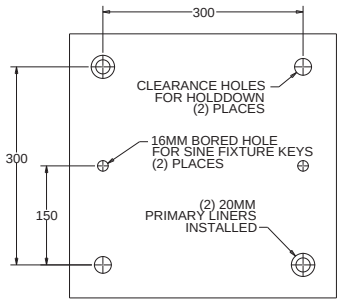

400x400 Modular Grid Fixture Plate

Aluminum Plate Part Number	Wt. (Kg)
58801	38

- FreMax™ 15 Steel or equivalent
- Thickness: 28.57mm ±0.13mm
- Parallel within 0.025mm Steel

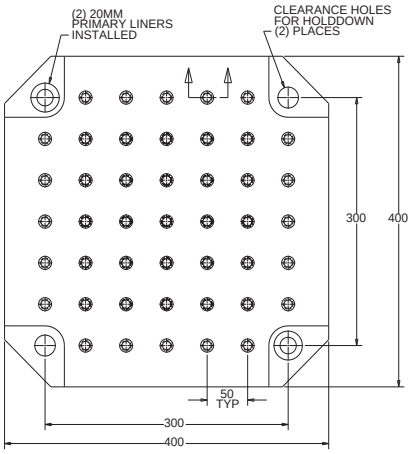

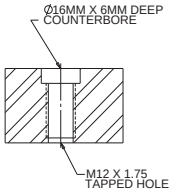

Mounts to Subplate with Ball Lock® Shank 49652 (20x25mm)

Jigsaw Interlocking FixturePlate

Aluminum Plate Part Number	Wt. (Kg)
58706	4

Steel Plate Part Number	Wt. (Kg)
58806	12

- Material: Cast Aluminum or FreMax™ 15 Steel or equivalent
- Thickness: 20mm ±0.13mm
- Parallel within 0.025mm Steel
- For use with narrow base 100mm or 150mm vise models
- Design allows close spacing of vises for more parts per run
- Mounts to Subplates using Ball Lock® Shank 44651 (20x20mm)
- Useful for high density fixturing

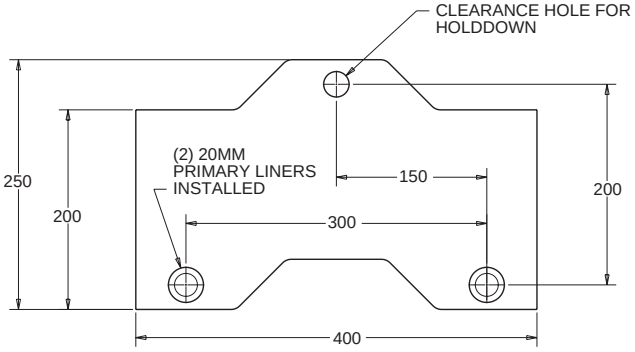

500x500x25mm Fixture Plate

Aluminum Plate Part Number	Wt. (Kg)
58727	17

Steel Plate Part Number	Wt. (Kg)
58827	48

- Cast Aluminum or FreMax™ 15 Steel or equivalent
- Thickness: 25mm ±0.13mm
- Parallel within 0.025mm Steel
- Mounts to Subplates using Ball Lock® Shank 49662 (25x25mm)

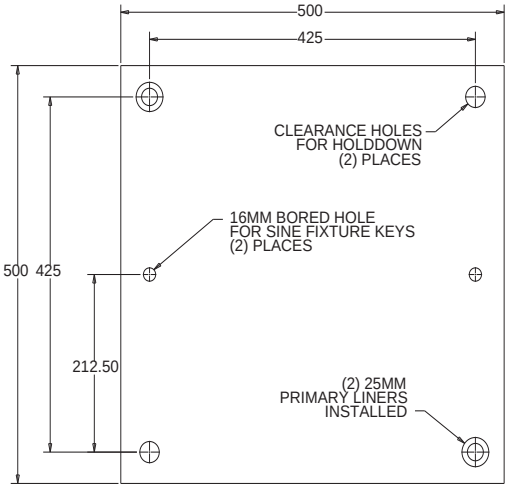

Pre-Machined Ball Lock® Steel Subplate

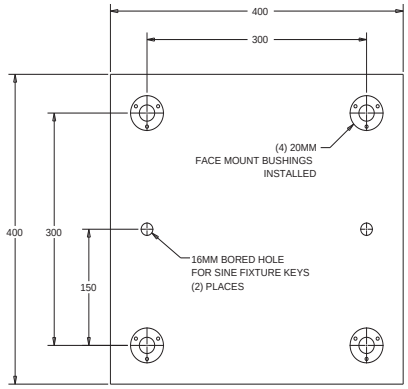

400 x400 Subplate

Part Number	Wt. (Kg)
59101	37

Equipped with four 20mm receiver bushings for use with 350x350 or 400x400 (mm) fixture plates. Ideal for horizontal machining centers or multiple pallet machining centers.

- FreMax™ 15 steel plate or equivalent
- Thickness: 28.57mm ±0.13mm
- Parallel within 0.025mm

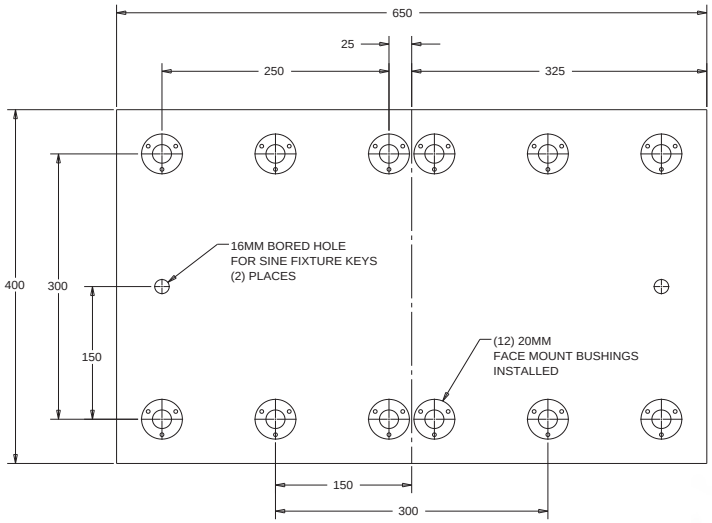

650x400 Dual Station Subplate

Part Number	Wt. (Kg)
59111	58

Equipped with twelve installed 20mm receiver bushings to easily locate and mount Jergens Standard Fixture Plates.

- Ideal for vertical machining centers
- Thickness: 28.57mm ±0.13mm
- Parallel within 0.025mm

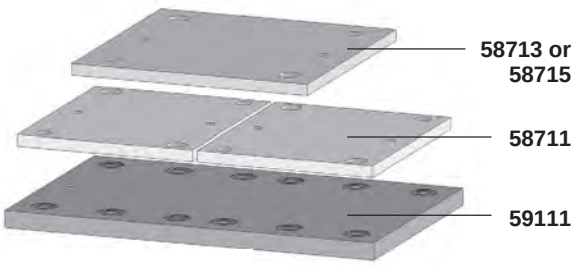

Aluminum Plate Part Number	Steel Plate Part Number	Number of Fixture Plates	Plate Width and Length (mm)
58713	58813	1	350x350
58715	58815	1	400x400
58711	58811	2	300x350

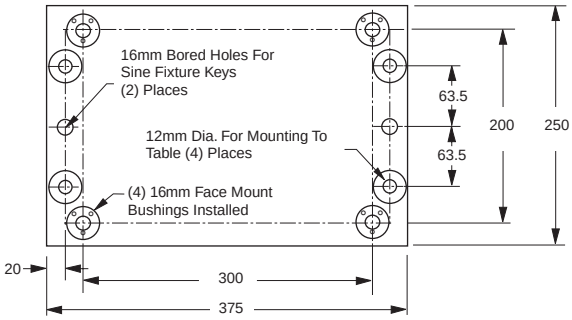

250x375 Bridgeport™ - Style Subplate

Part Number	Wt. (Kg)
59121	15

Equipped with four installed 16mm receiver bushings and 12mm mounting holes. Used with the Bridgeport™ style fixture plates 58731 or 58831.

- Thickness: 19.05mm ±0.13mm
- Parallel within 0.025mm

Ball Lock® Quick Change Kits include all components needed in a single package. See page 31 for details.

Ball Lock® Fixture Plates

- Cast Aluminum; or FreMax™ 15 Steel or equivalent
- Thickness ±0.13mm
- Parallel within .025mm Steel
- 6061–T-651 plates, flat within 0.03mm available upon request

Ball Lock® Fixture Plates with 2 Primary Liners Installed

Part Number				Plate Dimensions (mm)	Plate Thickness ±0.13(mm)	Ball Lock® Shank Size (mm)	Ball Lock® Shank Part Number
Aluminum	Weight (Kgs)	Steel	Weight (Kgs)				
58706	4	**58806**	12	250 x 400	20	20	**49651**
58711	5	**58811**	16	300 x 350	20	20	**49651**
58713	6	**58813**	19	350 x 350	20	20	**49651**
58715	8	**58815**	25	400 x 400	20	20	**49651**
58727	17	**58827**	48	500 x 500	25	25	**49662**
—	—	**58801**	38	400 x 400	28.57	20	**49652**
58731	5	**58831**	15	375 x 250	20	16	**49657**

- Machined to close tolerances
- Repeatability ±0.013mm or better
- Reduces fixture set-up and assembly time
- Provided with 16mm bored holes for sine fixture keys
- For horizontal or vertical machining centers, Tool Room Mills machines, or multiple pallet machining centers

Custom Sizes Available
Jergens will make Ball Lock® fixture plates or subplates to your specifications. Call 1-877-426-2504 for further information.

375x250x20mm Fixture Plate Bridgeport™ Style

Aluminum Plate Part Number	Wt. (Kg)
58731	5

Steel Plate Part Number	Wt. (Kg)
58831	15

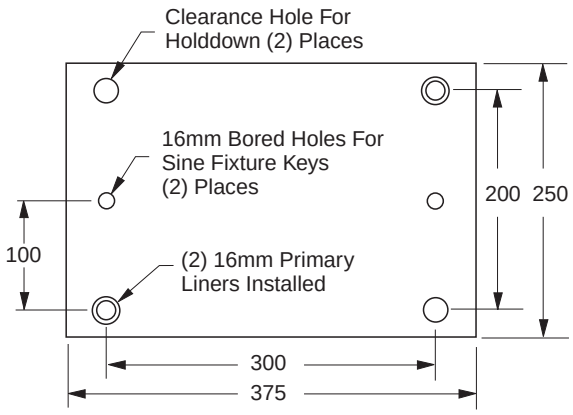

300x350x20mm Fixture Plate

Aluminum Plate Part Number	Wt. (Kg)
58711	5

Steel Plate Part Number	Wt. (Kg)
58811	16

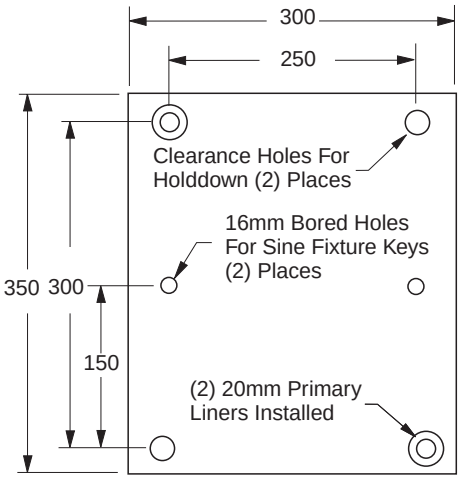

Quick Change Kits

The Jergens Ball Lock® Quick Change Kits speed fixture changeover in all types of manufacturing operations. Each kit includes two aluminum fixture plates with 2 primary liner bushings installed; one steel subplate with receiver bushings installed, and four 20mm Ball Lock® shanks with working loads of 3000 lbs. each. While one fixture plate is on the machine, the operator can load parts on the other. This minimizes downtime for true set-up reduction. To enable the subplate to be mounted on a slotted table without the need to indicate the subplate, sine fixture keys can be used. The sine fixture key reamed holes are oriented parallel to the receiver bushings on the subplate and to the liner bushings on the fixture plate. These also allow the fixture plate to be mounted on a toolroom mill without the need to indicate it. This is extremely useful when machining location points on your fixture.

Ball Lock® MOUNTING SYSTEM

Everything You Need to Change Fixtures in Less Than One Minute

Aluminum Fixture Plate

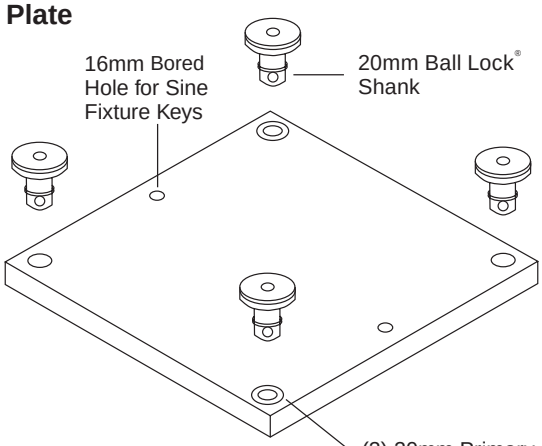

Steel Subplate

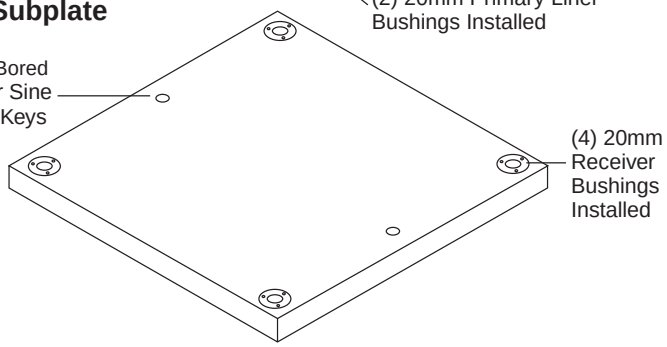

Quick Change Kits

Part No.	Kit Includes
59002	2 - 58715 (400x400x20) aluminum fixture plates with 20mm liner bushings installed 1 - 59101 (400x400x25) steel subplate with receiver bushings installed 4 - 20mm Ball Lock® Shanks (49651)

Custom Kits Available

Jergens manufactures ready to use kits including Ball Lock® subplate and fixture plates.
For a special kit tailored to your CNC machine, please provide:
Name and Type of Machine _____
Travel of Machine Table (x, y, z) _____
Dimensions of Machine Table (x and y) _____
Maximum Weight allowed on Machine Table _____
T-slot Width and Center to Center Distance _____

Pre-Machined Ball Lock® T-Columns

- Class 40 Cast Iron
- Also available in Aluminum
- Ball Lock® Receiver Bushings and Liners installed
- Provides accurate fixturing base for CNC machining centers
- Perpendicularity is 0.025 mm per 250 mm

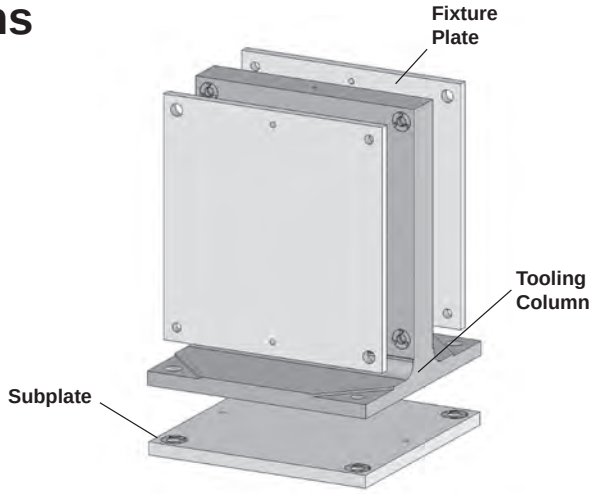

Custom Sizes Available with or without Ball Lock®

We are able to quote you on your special requirement with or without the Ball Lock® Mounting System.
Call 1-877-426-2504 for design specification information.

Cast Iron T-Columns With Ball Lock® Receiver Bushings Installed

See page 34 for Metric Fixture Plates and Subplates

Pallet Size (mm)	Part Number	C	D	E	F	G	H	I	J	K	L	M	N	O (mm)	P (mm)	Wt. (Kg)
400	**69151**	410	25	400	400	350	350	350	350	100	500	125	90	20	20	190
500	**69161**	560	25	500	500	475	425	425	425	120	650	137.5	90	25	25	310
630	**69171**	660	40	630	630	575	550	525	525	100	750	137.5	90	35	25	500

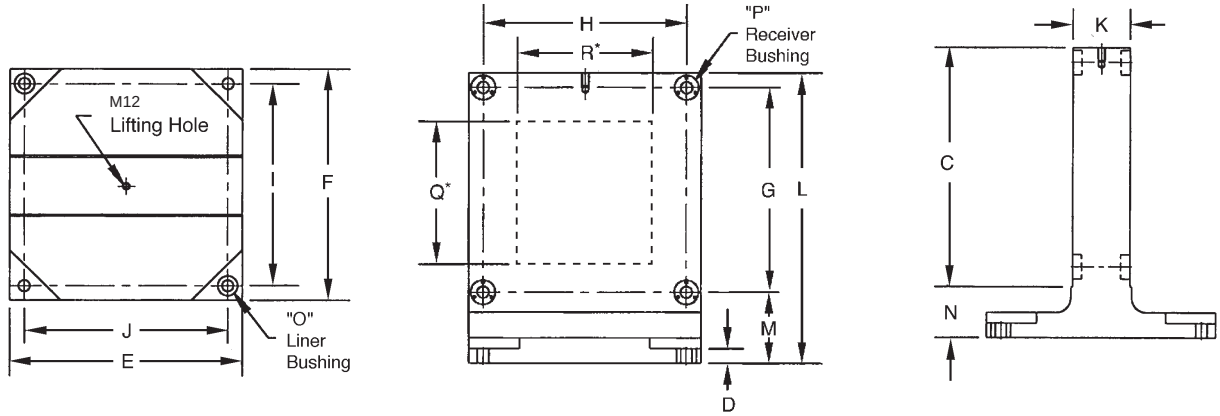

***Note**: Window sections are also available on T-Columns. Specify window size and location (Q and R Dimensions).

Corresponding Fixture Plates, Subplates and Ball Lock® Shanks

Pallet Size (mm)	T-Column Part Number	Aluminum Fixture Plate Part Number	Steel Fixture Plate Part Number	Fixture Plate Size	Fixture Plate Ball Lock® Shank Part Number	Shank Size	Subplate Part Number	Subplate Ball Lock® Shank Part Number	Shank Size
400	**69151**	**58717**	**58817**	400 x 400	**49651**	20 x 20	**59102**	**49652**	20 x 25
500	**69161**	**58745**	**58845**	500 x 550	**49662**	25 x 25	**59103**	**49662**	25 x 25
630	**69171**	**58746**	**58846**	625 x 650	**49662**	25 x 25	**59104**	**49683**	35 x 40

Use Hoist Ring **23462,** see Lifting Solutions Catalog or Master Catalog for lifting and handling – Order separately.

Engineering Changes

Product improvement is a continuing process at Jergens. Specifications and engineering data are subject to change after publishing. Contact Jergens Technical Sales Department to verify any dimensions or specifications.

Pre-Machined Ball Lock® 4-Sided Tooling Columns

- Class 40 cast iron
- Also available in Aluminum
- Ball Lock® Receiver Bushings and Liner Bushings installed
- Provides accurate fixturing base for CNC machining centers
- Perpendicularity is 0.025 mm per 250 mm

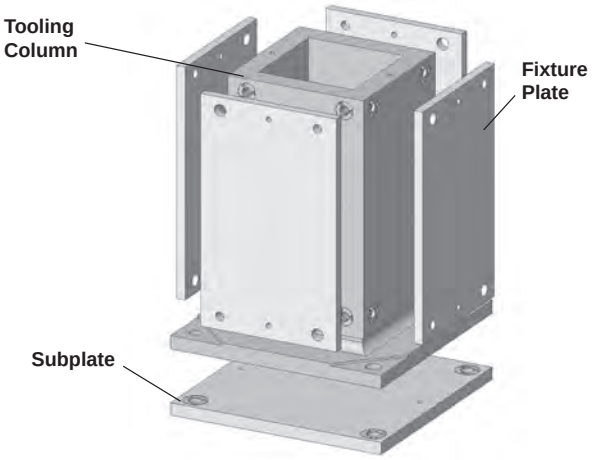

Custom Sizes Available with or without Ball Lock®

We are able to quote you on your special requirement with or without the Ball Lock® Mounting System.
Call 1-877-426-2504 for design specification information.

Cast Iron 4-Sided Tooling Columns With Ball Lock® Receiver Bushings Installed

See page 32 for Metric Fixture and Subplates

Pallet Size (mm)	Part Number	A	B	C	D	E	F	G	H	I	J	K	L	M	N	O (mm)	P (mm)	Wt. (Kg)
400	**69051**	250	250	505	25	400	400	450	150	350	350	40	600	125	95	20	20	225
500	**69061**	300	300	630	25	500	500	550	175	425	425	40	725	137.5	95	25	25	320
630	**69071**	400	400	655	40	630	630	575	275	525	525	45	750	137.5	95	35	25	495

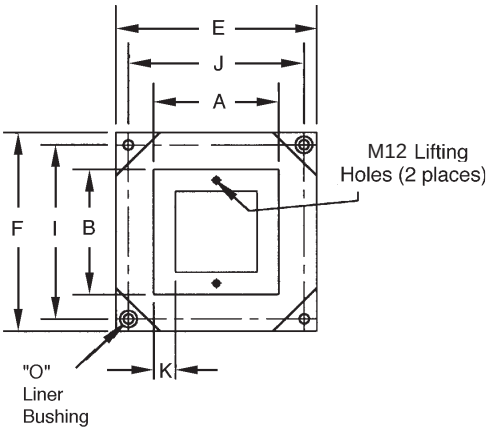

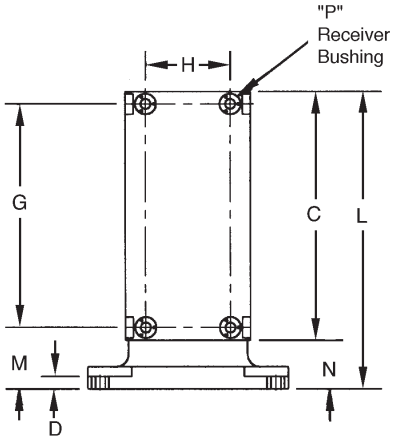

Corresponding Fixture Plates, Subplates and Ball Lock® Shanks

Pallet Size (mm)	T-Column Part Number	Aluminum Fixture Plate Part Number	Steel Fixture Plate Part Number	Fixture Plate Size	Fixture Plate Ball Lock® Shank Part Number	Shank Size	Subplate Part Number	Subplate Ball Lock® Shank Part Number	Shank Size
400	**69051**	**58741**	**58841**	250 x 500	**49651**	20 x 20	**59102**	**49652**	20 x 25
500	**69061**	**58742**	**58842**	300 x 625	**49662**	25 x 25	**59103**	**49662**	25 x 25
630	**69071**	**58743**	**58843**	400 x 650	**49662**	25 x 25	**59104**	**49683**	35 x 40

Use Hoist Ring **23462,** see Lifting Solutions Catalog or Master Catalog for lifting and handling – Order separately.

Engineering Changes

Product improvement is a continuing process at Jergens. Specifications and engineering data are subject to change after publishing. Contact Jergens Technical Sales Department to verify any dimensions or specifications.

Subplates for Tooling Columns and Fixture Plates

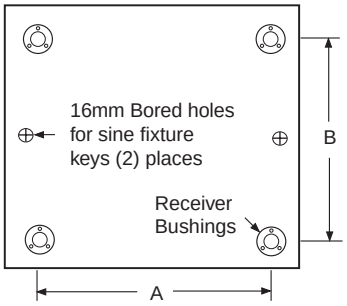

Standard Steel Subplates for Tooling Columns

Subplate Mounting holes can be provided per customer specification.
Supplied with Ball Lock® Receiver Bushings installed.

Part Number	Pallet Size (mm)	For Tooling Columns	Ball Lock® Pattern A (mm)	Ball Lock® Pattern B (mm)	Receiver Size (mm)	Thickness of Subplate (mm) ±0.13	Wt (Kgs)
59102	400	**69151, 69051**	350	350	20	28.57	31
59103	500	**69161, 69061**	425	425	25	31.75	59
59103-C*	500	**69151, 69051**	350/425	350/425	20/25	31.75	59
—	—	**69161, 69061**	Dual	Dual	Dual	—	—
59104	630	**69171, 69071**	525	525	35	34.92	124

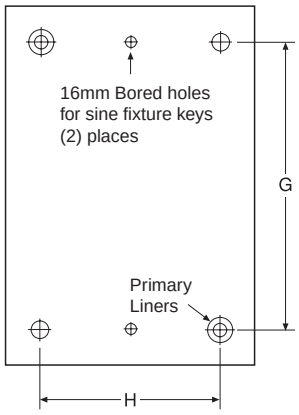

Fixture Plates for Standard Tooling Columns and T-Columns

Supplied with 2 primary Ball Lock® Liner Bushings installed.

Pallet Size (mm)	Part Number Aluminum	(Kg)	Steel	(Kg)	For Tooling Columns	Type	Fixture Plate Size (mm)	Fixture Plate Thickness (mm) ±0.13	Ball Lock® Pattern H (mm)	Ball Lock® Pattern G (mm)	Liner Size (mm)
400	**58741**	7	**58841**	19	**69051**	4-S	250x500	20	150	450	20
500	**58742**	13	**58842**	36	**69061**	4-S	300x625	25	175	550	25
630	**58743**	18	**58843**	50	**69071**	4-S	400x650	25	275	575	25
400	**58717**	8	**58817**	25	**69151**	T	400x400	20	350	350	20
500	**58745**	19	**58845**	53	**69161**	T	500x550	25	425	475	25
630	**58746**	27	**58846**	63	**69171**	T	625x650	25	550	575	25

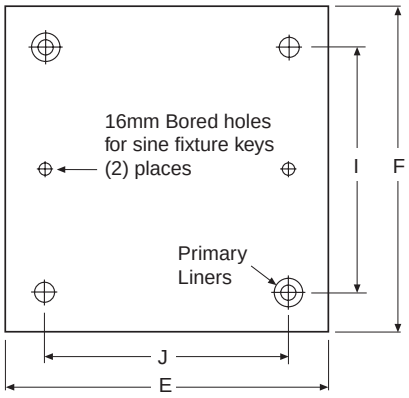

Fixture Plates for Tooling Column Subplates

Supplied with 2 primary Ball Lock® Liner Bushings installed.

Pallet Size (mm)	Part Number Aluminum	(Kg)	Steel	(Kg)	For Subplate	Plate Dim. E (mm)	Plate Dim. F (mm)	Fixture Plate Thickness ±0.13 (mm)	Ball Lock® Pattern I (mm)	Ball Lock® Pattern J (mm)	Liner Size (mm)
400	**58717**	8	**58817**	25	**59102**	400	400	20	350	350	20
500	**58727**	17	**58827**	48	**59103**	500	500	25	425	425	25
630	**58732**	27	**58832**	76	**59104**	630	630	25	525	525	35

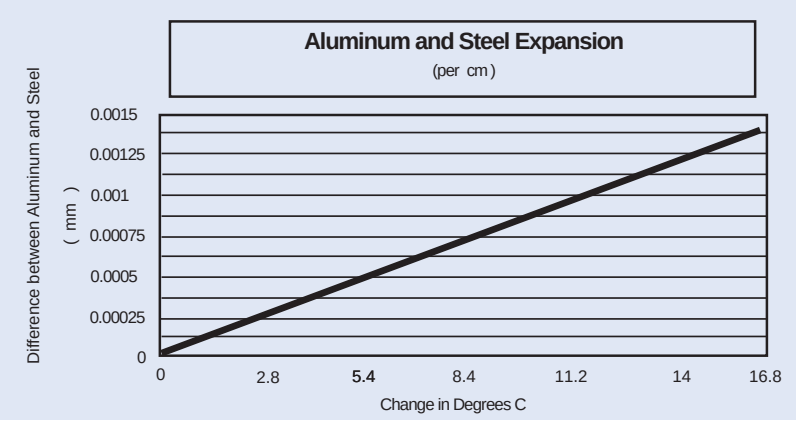

NOTE: Aluminum and steel expand at different rates. Please take this information into consideration when creating your own Ball Lock® fixture and subplates.

Ball Lock® For 4th Axis Rotary Indexers

Problem:
Rotary indexers increase the versatility of vertical machining centers, yet they offer one major challenge: set-up is so time-consuming that it may limit a machine's flexibility. In many cases, machinists dedicate their 4th Axis tool to a single machine to avoid the agony of an extended set-up and changeover.

Benefits:
- Maximize indexer utilization
- Eliminate lengthy set-ups
- Accurate fixture plate changover in seconds

Jergens' Solution:
Ball Lock® Mounting System for Indexers provides a double solution.

First, Ball Lock® mounting plates free up your machine for additional work by allowing a fast and accurate installation and removal of the complete indexer. Avoid hours of set up. The Ball Lock® System does it in minutes, with repeatability at ±0.0005" (±0.013mm). Low profile, positive clamping, proven in over many years of field use.

Second, the Ball Lock® System provides your fixture plate changeover. By mounting the round subplate to the indexer faceplate, you'll "plug-in" new fixtures in record time (less than 60 seconds).

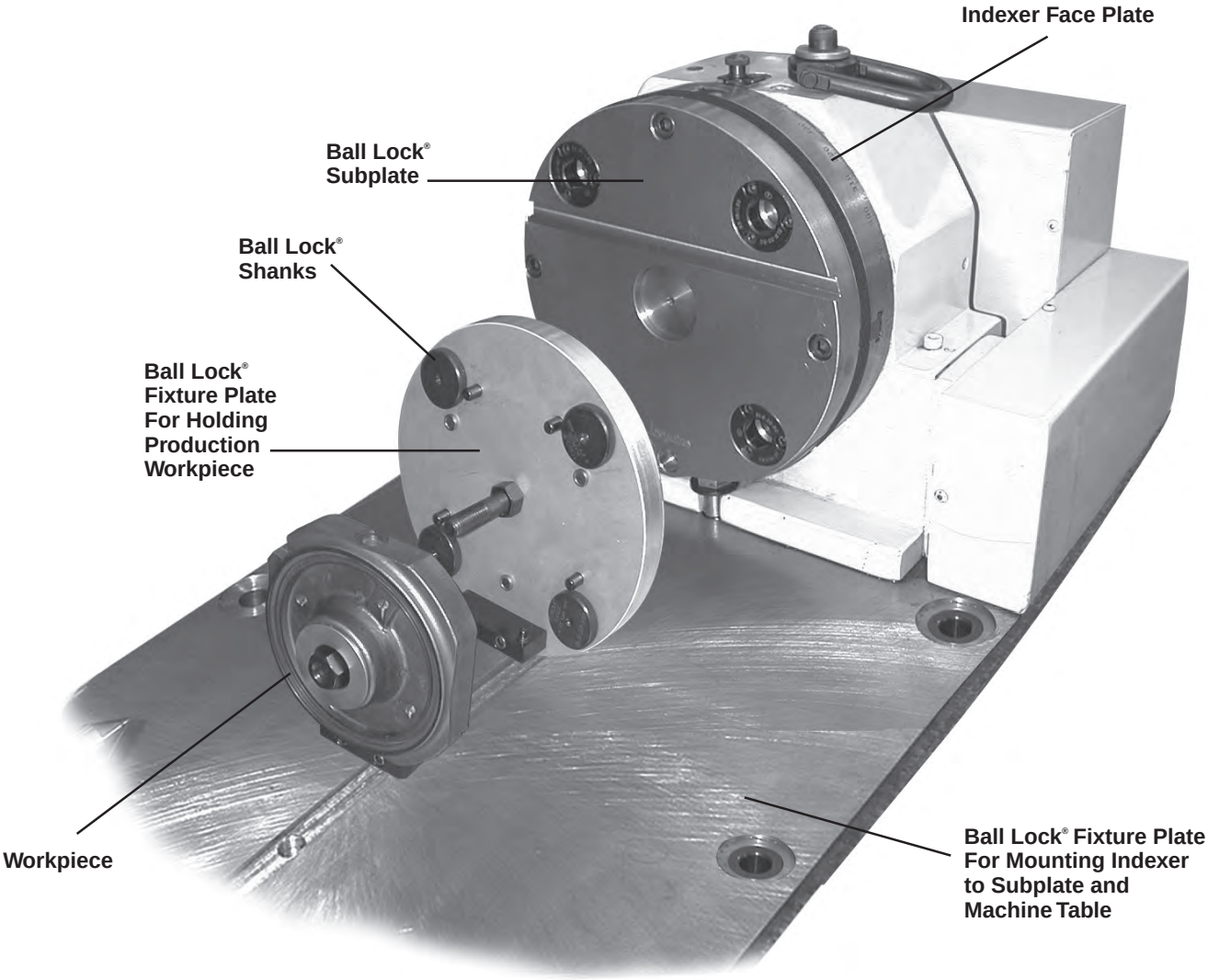

Subplates and fixture plates come with bushings pre-installed.

Round Ball Lock® Fixture Plates and Subplates

Standard Round

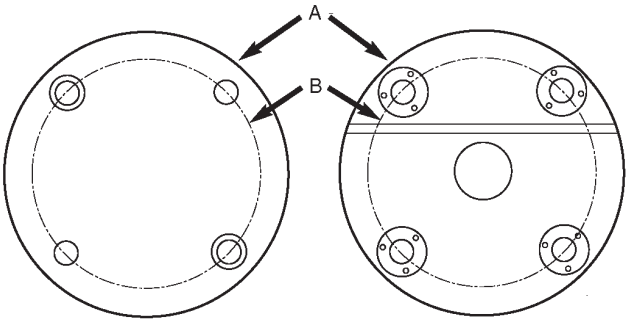

Fixture Plate Subplate

Cast Aluminum, FreeMax™ or Steel equivalent

Fixture Plate (mm)

Part No.	A	B	Thickness	Ball Lock® Liner	Ball Lock® Shank	Weight (Kgs)
58707	200	150	20	16	49657	1.6
58708	250	200	25	20	49652	3.2
58709	300	250	25	20	49652	5.0

Subplate(mm)

Part No.	A	B	Thickness	Ball Lock® Receiver	Center Hole	Weight (Kgs)
59107	200	150	20	16	25	5.0
59108	250	200	25	20	50	9.6
59109	300	250	25	20	50	15.0

Note: Equivalent system available in inch dimensions.

Custom Round Plates

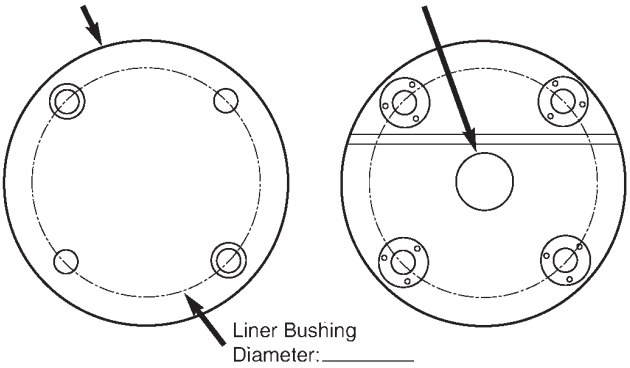

Indexer:

Make: _____

Model: _____

Diameter: _____

Light Duty or Heavy Duty: _____

Through Hole Bore: _____

CNC Machine:

Make: _____

Model: _____

Weight Capacity: _____

Indexer Faceplate:

T-Slot Size: _____

Configuration/Orientation: _____

or

Drilled Tapped Hole Size:

Configuration/Orientation: _____

Engineering Changes

Product improvement is a continuing process at Jergens. Specifications and engineering data are subject to change without notice. If current information is critical to your design, it is suggested that you contact Jergens Technical Sales Department to verify any dimensions or specifications.

Locating and Clamping Shanks

U.S. Patents: 3,498,653
4,135,418

- Material: Shank/Bushing, AISI 4340
  Liner, 52100
- Finish: Black Oxide
- Heat Treat: Shanks, RC 40-45
  Bushings, RC 50-54
  Liners, RC 62-64
- Operating Temperature Range: -30°C to 200°C
- Stainless Steel available

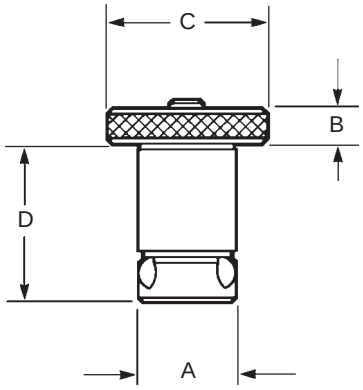

Repair Kits

Each Kit Includes:
- Replacement Screw
- Locking Balls
- Drive Ball
- O-Ring

Any Ball Lock® application requires at least two sets of shanks, receiver bushings and liners. The liners are placed into the fixture plate to insure extremely accurate positioning. If more than two shanks are required (to provide additional hold down force), omit the liner bushing so that these additional holes will not interfere with your primary locating holes.

See page 41 for Fast Acting Shanks.

Locating and Clamping Shank Dimensions

Shank Diameter (mm) A	Fixture Plate Thickness ±0.13mm	Shank Part Number	Head of Shank Height B	Head of Shank Diameter C	D	Hex Wrench Size For Set Screw	Maximum Screw Torque (N.m)	Maximum Holddown Force (KN)	Recommended Screw Torque (N.m)	Recommended Holddown Force (KN)	Shank Repair Kit Part Number
13	13	**49655**	6	22	27.6	2.5	1.2	3.3	1	2.7	**49955**
—	20	**49656**	—	—	34.6	—	—	—	—	—	**49956**
16	20	**49657**	8	32	36.5	3	4.5	5.3	3	3.5	**49957**
—	25	**49658**	—	—	41.5	—	—	—	—	—	**49958**
20	20	**49651**	10	40	39.5	3	5.3	13.3	4	10	**49951**
—	25	**49652**	—	—	44.5	—	—	—	—	—	**49952**
25	20	**49661**	10	45	44.0	4	11	30	9	23	**49961**
—	25	**49662**	—	—	49.0	—	—	—	—	—	**49962**
30	20	**49671**	13	50	49.0	5	18	44	15	35	**49971**
—	25	**49672**	—	—	54.0	—	—	—	—	—	**49972**
35	20	**49681**	13	60	51.0	6	33	68	25	52	**49981**
—	25	**49682**	—	—	56.0	—	—	—	—	—	**49982**
—	40	**49683**	—	—	71.0	—	—	—	—	—	**49983**
—	50	**49684**	—	—	81.0	—	—	—	—	—	**49984**
50	20	**49691**	20	75	64.0	10	65	88	50	67	**49991**
—	25	**49692**	—	—	69.0	—	—	—	—	—	**49992**
—	40	**49693**	—	—	84.0	—	—	—	—	—	**49993**
—	50	**49694**	—	—	94.0	—	—	—	—	—	**49994**

Receiver Bushings

Two styles of receiver bushings are available. Installed bushings should be approximately 0.3mm below subplate surface.

Face Mount

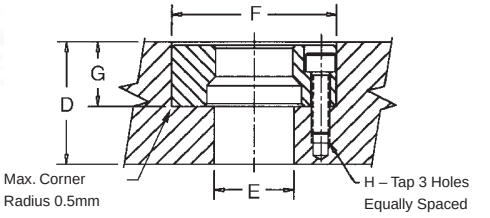

Face Mount Bushing
Installation Instructions

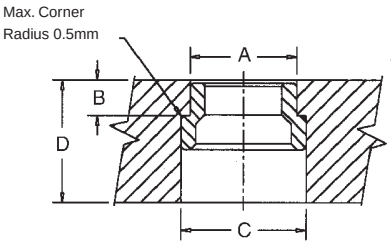

Back Mount Bushing
Installation Instructions

Back Mount

Generally, the face mount receiver bushing is utilized in blind hole applications (Slip Fit).

The back mount receiver bushing is used in through hole applications (Light Press Fit).

Installation Dimensions

Face Mount

Shank Dia. (mm)	Face Mount Part Number	Actual O.D. -0.01 -0.02	Clearance Drill Diameter E	Bore +0.010 +0.003 F	Depth +0.025 -0.025 G	Tap Size & Depth[1] H	Bolt Circle Diameter 3 PL Equally Spaced	Min. Subplate Thickness D
13	**49556**	35	13.5	35	11.91	M4x0.7 x 7	25	20
16	**49557**	37	21.0	37	11.91	M4x0.7 x 7	29	20
20	**49551**	45	21.0	45	16.21	M5x0.8 x 9	35	25
25	**49552**	55	25.5	55	20.32	M6x1.0 x 10	42	30
30	**49553**	60	30.5	60	22.15	M6x1.0 x 11	48	35
35	**49554**	70	40.0	70	22.99	M8x1.25 x 17	56	40
50	**49555**	92	55.0	92	31.50	M10x1.5 x 18	75	50

[1]Cap Screws Supplied with Face Mount Bushings.

Back Mount

Shank Dia. (mm)	Back Mount Part Number	Actual O.D. +0.04 +0.03 A	Depth +0.025 -0.025 B	C-Bore ±0.15 C	Min. Subplate Thickness D
13	**49566**	20	6.92	26	20
16	**49567**	22	7.24	29	20
20	**49561**	28	8.74	33	25
25	**49562**	35	10.54	41	25
30	**49563**	42	10.95	49	30
35	**49564**	48	12.50	55	35
50	**49565**	67	15.75	76	45

Liner Bushings for Fixture Plates

Locating repeatability will determine if one primary and one secondary or two primary liners are needed. With two primary liners, repeatability of ±0.013 mm can be maintained if the two holes for receiver bushings are held to a centerline distance of ±0.005 mm tolerance.

Note on Installation of Press Fit Liners & Back Mount Style Receiver Bushings:
To alleviate the possibility of binding the shank in the bore, the maximum interference fit between bore and bushing O.D. should not exceed 0.013 mm.

Liner Dimensions

Shank Diameter (mm)	Fixture Plate Thickness +0.13 - 0.13	Primary Liner		Secondary Liner		Liner O.D. +0.00 - 0.01
		Part Number	I.D.	Part Number	I.D.	
13	13	**49755**	13.01	**49855**	13.04	19.040
—	20	**49756**	—	**49856**	—	19.040
16	20	**49757**	16.01	**49857**	16.04	25.042
—	25	**49758**	—	**49858**	—	25.042
20	20	**49751**	20.01	**49851**	20.04	35.042
—	25	**49752**	—	**49852**	—	35.042
25	20	**49761**	25.01	**49861**	25.04	35.042
—	25	**49762**	—	**49862**	—	35.042
30	20	**49771**	30.01	**49871**	30.04	45.042
—	25	**49772**	—	**49872**		45.042
35	20	**49781**	35.01	**49881**	35.04	45.042
—	25	**49782**	—	**49882**	—	45.042
—	40	**49783**	—	**49883**	—	45.042
—	50	**49784**	—	**49884**	—	45.042
50	20	**49791**	50.01	**49891**	50.04	63.546
—	25	**49792**	—	**49892**	—	63.546
—	40	**49793**	—	**49893**	—	63.546
—	50	**49794**	—	**49894**	—	63.546

Stainless Steel Locating and Clamping Shanks

U.S. Patents: 3,498,653
4,135,418

- Material: 17-4 PH Stainless Steel
- Heat Treat: Rc 40-45
- Operating Temperature Range: -30°C to 200°C

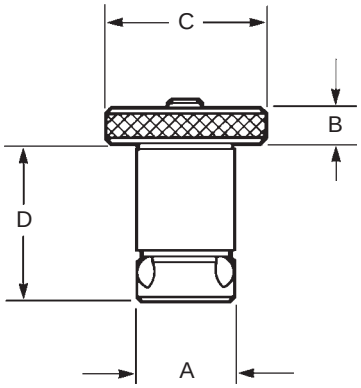

Replacement Kits

Each Kit Includes:
- Replacement Screw
- Locking Balls
- Drive Ball
- O-Ring

Any Ball Lock® application requires at least two sets of shanks, receiver bushings and liners. The liners are placed into the fixture plate to insure extremely accurate positioning. If more than two shanks are required (to provide additional hold down force), omit the liner bushing so that these additional holes will not interfere with your primary locating holes.

Stainless Steel Locating and Clamping Shank Dimensions

Shank Diameter (mm) A	Fixture Plate Thickness ±0.13mm	Shank Part Number	Head of Shank		D	Hex Wrench Size For Set Screw	Maximum		Recommended		Shank Repair Kit Part Number
			Height B	Diameter C			Screw Torque (N.m)	Holddown Force (KN)	Screw Torque (N.m)	Holddown Force (KN)	
13	13	**49655SS**	6	22	27.6	2.5	1.2	3.3	1	2.7	**49955SS**
—	20	**49656SS**	—	—	34.6	—	—	—	—	—	**49956SS**
16	20	**49657SS**	8	32	36.5	3	4.5	5.3	3	3.5	**49957SS**
—	25	**49658SS**	—	—	41.5	—	—	—	—	—	**49958SS**
20	20	**49651SS**	10	40	39.5	3	5.3	13.3	4	10	**49951SS**
—	25	**49652SS**	—	—	44.5	—	—	—	—	—	**49952SS**
25	20	**49661SS**	10	45	44.0	4	11	30	9	23	**49961SS**
—	25	**49662SS**	—	—	49.0	—	—	—	—	—	**49962SS**
30	20	**49671SS**	13	50	49.0	5	18	44	15	35	**49971SS**
—	25	**49672SS**	—	—	54.0	—	—	—	—	—	**49972SS**
35	20	**49681SS**	13	60	51.0	6	33	68	25	52	**49981SS**
—	25	**49682SS**	—	—	56.0	—	—	—	—	—	**49982SS**
—	40	**49683SS**	—	—	71.0	—	—	—	—	—	**49983SS**
—	50	**49684SS**	—	—	81.0	—	—	—	—	—	**49984SS**
50	20	**49691SS**	20	75	64.0	10	65	88	50	67	**49991SS**
—	25	**49692SS**	—	—	69.0	—	—	—	—	—	**49992SS**
—	40	**49693SS**	—	—	84.0	—	—	—	—	—	**49993SS**
—	50	**49694SS**	—	—	94.0	—	—	—	—	—	**49994SS**

Stainless Steel Receiver Bushings

Two styles of receiver bushings are available. Installed bushings should be approximately 0.3mm below subplate surface.

Face Mount

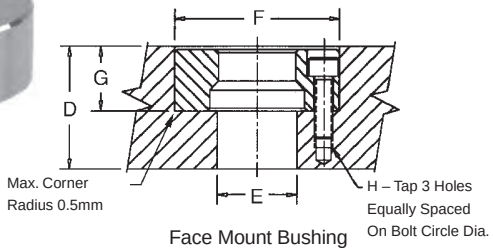

Face Mount Bushing
Installation Instructions

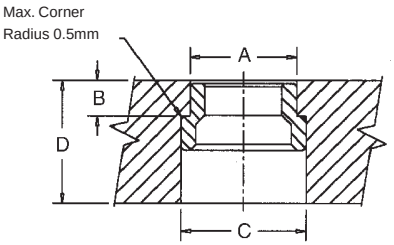

Back Mount Bushing
Installation Instructions

Back Mount

Generally, the face mount receiver bushing is utilized in blind hole applications (Slip Fit).

The back mount receiver bushing is used in through hole applications (Light Press Fit).

Installation Dimensions

Face Mount

Shank Dia. (mm)	Face Mount Part Number	Actual O.D. -0.01 -0.02	Clearance Drill Diameter E	Bore +0.010 +0.003 F	Depth +0.025 -0.025 G	Tap Size & Depth[1] H	Bolt Circle Diameter 3 PL Equally Spaced	Min. Subplate Thickness D
13	**49556SS**	35	13.5	35	11.91	M4x0.7 x 7	25	20
16	**49557SS**	37	21.0	37	11.91	M4x0.7 x 7	29	20
20	**49551SS**	45	21.0	45	16.21	M5x0.8 x 9	35	25
25	**49552SS**	55	25.5	55	20.32	M6x1.0 x 10	42	30
30	**49553SS**	60	30.5	60	22.15	M6x1.0 x 11	48	35
35	**49554SS**	70	40.0	70	22.99	M8x1.25 x 17	56	40
50	**49555SS**	92	55.0	92	31.50	M10x1.5 x 18	75	50

[1]Cap Screws Supplied with Face Mount Bushings.

Back Mount

Shank Dia. (mm)	Back Mount Part Number	Actual O.D. +0.04 +0.03 A	Depth +0.025 -0.025 B	C-Bore ±0.15 C	Min. Subplate Thickness D
13	**49566SS**	20	6.92	26	20
16	**49567SS**	22	7.24	29	20
20	**49561SS**	28	8.74	33	25
25	**49562SS**	35	10.54	41	25
30	**49563SS**	42	10.95	49	30
35	**49564SS**	48	12.50	55	35
50	**49565SS**	67	15.75	76	45

Stainless Steel Liner Bushings for Fixture Plates

Locating repeatability will determine if one primary and one secondary or two primary liners are needed. With two primary liners, repeatability of ±0.013 mm can be maintained if the two holes for receiver bushings are held to a centerline distance of ±0.005 mm tolerance.

Note on Installation of Press Fit Liners & Back Mount Style Receiver Bushings:
To alleviate the possibility of binding the shank in the bore, the maximum interference fit between bore and bushing O.D. should not exceed 0.013 mm.

Liner Dimensions

Shank Diameter (mm)	Fixture Plate Thickness +0.13 - 0.13	Primary Liner		Secondary Liner		Liner O.D. +0.00 - 0.01
		Part Number	I.D.	Part Number	I.D.	
13	13	**49755SS**	13.01	**49855SS**	13.04	19.040
—	20	**49756SS**	—	**49856SS**	—	19.040
16	20	**49757SS**	16.01	**49857SS**	16.04	25.042
—	25	**49758SS**	—	**49858SS**	—	25.042
20	20	**49751SS**	20.01	**49851SS**	20.04	35.042
—	25	**49752SS**	—	**49852SS**	—	35.042
25	20	**49761SS**	25.01	**49861SS**	25.04	35.042
—	25	**49762SS**	—	**49862SS**	—	35.042
30	20	**49771SS**	30.01	**49871SS**	30.04	45.042
—	25	**49772SS**	—	**49872SS**		45.042
35	20	**49781SS**	35.01	**49881SS**	35.04	45.042
—	25	**49782SS**	—	**49882SS**	—	45.042
—	40	**49783SS**	—	**49883SS**	—	45.042
—	50	**49784SS**	—	**49884SS**	—	45.042
50	20	**49791SS**	50.01	**49891SS**	50.04	63.546
—	25	**49792SS**	—	**49892SS**	—	63.546
—	40	**49793SS**	—	**49893SS**	—	63.546
—	50	**49794SS**	—	**49894SS**	—	63.546

Accessories

Tapered Caps and Plugs

Keep debris out of your subplate's receiver bushings when not in use. Polyethylene caps snap in and out easily.

Packaged 10 per pack.

Receiver Bushing Diameter	Part Number
13	**49201**
16	**49202**
20	**49203**
25	**49204**
30	**49205**
35	**49206**
50	**49207**

Lifting Handles

For easy handling of fixture plates up to 500 lbs.

Part Number	Length	Ht.	W	Mounting Distance
33701	107mm	36mm	.38 Kg	93.47mm

Sine Fixture Keys

Part Number	Shank Size A	Slot Size B	C	Weight (Kg)	Recommended Hole Diameter
39550	16	10	25	.04	16mm Shank Size: 16.01 ± 0.01
39551	16	12	25	.04	
39552	16	14	25	.05	
39553	16	16	25	.05	
39554	16	18	29	.05	
39555	16	20	29	.06	
39556	16	22	29	.06	
39557	20	24	35	.07	20mm Shank Size: 20.01 ± 0.01
39558	20	28	35	.10	
39559	20	32	40	.10	

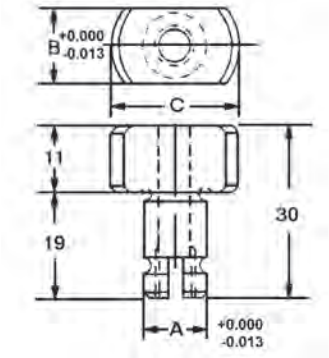

Locate subplates or fixture plates to slotted machine tables without having to slot the plate. Available in sizes from 12mm to 32mm slots.

Fast Acting Ball Lock® Shanks

Ball Lock® Shank Diameter (mm)	Fixture Plate Thickness (mm)	FAST ACTING BALL LOCK® SHANKS			
		Shank with Thumb Screw		Shank with Adjustable Handle	
		Part Number		Part Number	
		Assenbly	T-Screw	Assenbly	Handle
13	13	**49655-S**	**43971**	**49655-H**	**34360**
—	20	**49656-S**	**43972**	**49656-H**	**34361**
16	20	**49657-S**	**43974**	**49657-H**	**34365**
—	25	**49658-S**	**43975**	**49658-H**	**34365**
20	20	**49651-S**	**43974**	**49651-H**	**34365**
—	25	**49652-S**	**43975**	**49652-H**	**34365**
25	20	**49661-S**	**43977**	**49661-H**	**34378**
—	25	**49662-S**	**43978**	**49662-H**	**34379**
30	20	**49671-S**	**43980**	**49671-H**	**34385**
—	25	**49672-S**	**43980**	**49672-H**	**34385**
35	20	**49681-S**	**43985**	**49681-H**	**34393**
—	25	**49682-S**	**43985**	**49682-H**	**34393**

Thumb Screw

- Fast acting thumb screws 2 1/2 turns. No tools needed.

Adjustable Handle

- Handle can be moved out of the work area to avoid interference.

Features of the Jergens Zero Point Mounting System

- **Positioning and clamping in one operation**
- **High repeatability and accuracy**
- **Low cost solution for quick pallet changing**

Typical applications for the Jergens Zero Point System:

- Milling
- Assembly
- Welding
- Injection Molding
- Grinding
- Measuring

Pull Studs can also be installed directly into the workpieces, making 5-sided processing possible.

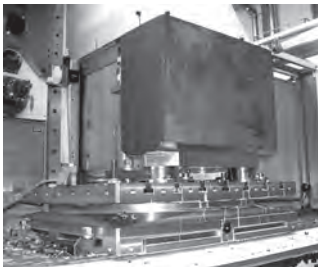

Best results with large and heavy workpieces.

Jergens Zero Point clamping systems are made exclusively of rust-free materials and so are ideally suited for use in the food-service area as well as in the pharmaceutical and chemical industry.

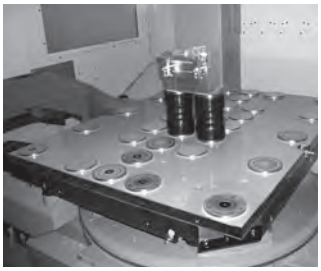

Through different dimensions, the advantage of the Zero Point clamping system are optimally used.

Pull Studs and Engagement Screws

Pages 48–49

Clamping Plates with Built-In Modules

Pages 46–47

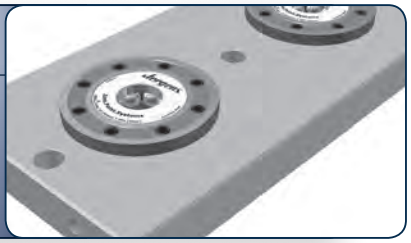

Clamping Modules

Pages 50–52

- Machine tables
- Plates
- 4-axis/5-axis machining
- Columns
- Pallets

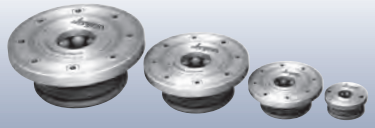

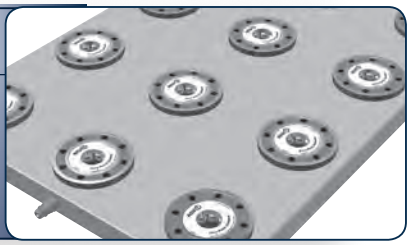

Surface/Mounted Clamping Modules

Pages 53–54

- For large & heavy workpieces
- Pull Studs installed directly into workpiece

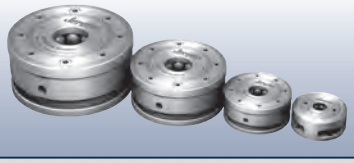

Flange Type Module with Centering & Cover Rings

Page 55–56

- Used to fasten surface-mounted clamping modules on the machine table
- Hydraulic release with or without blowout

Horizontal Rapid-Clamping Module

Page 57

- For easy handling of heavy fixtures

Jergens' Zero Point Mounting System – Cut Set-up Times by Up to 90%.

Fix, Position and Clamp in a Single Step with Jergens' Zero Point Mounting System.

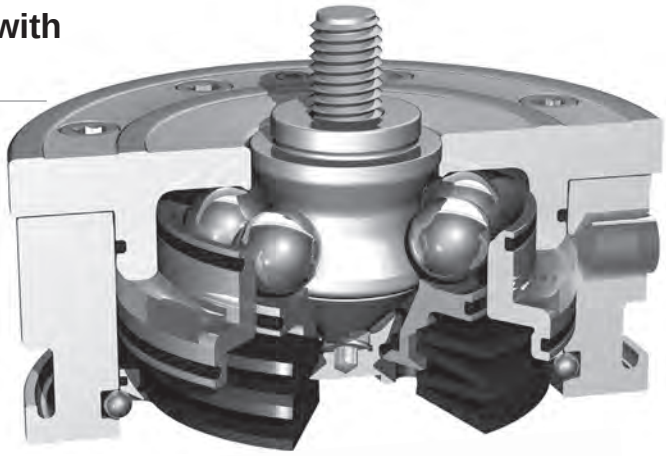

Jergens is proud to introduce the best-engineered Zero Point Mounting System (ZPS) on the market. This revolutionary technology cuts set-up time by up to 90% by combining fixing, positioning and clamping in a single operation. Available with either pneumatic or hydraulic release, these positive locking locating modules allow operators to quickly change out large and small machine fixtures with extreme accuracy and minimal effort. Other features include:

- **Repeatability <0.005mm (0.0002")**
- **Minimizes set-up time**
- **Hardened stainless (AISI 440B) steel construction**
- **Integrated safety system**
- **Compact design**
- **Positive locking**
- **High retaining force**

Pull-in / Locking Force up to 40kN / 9000lbs.

Pull-in / Locking Force up to 20kN / 4530lbs.

Pull-in / Locking Force up to 10kN / 2290lbs.

Pull-in / Locking Force up to 5kN / 1100lbs.

Smart Features for Process Improvement

Reduce set-up times and increase both accuracy and repeatability with design features exclusive to the Jergens ZPS:

Self Guiding

The self-guiding, tapered profile of the mounting stud allows heavy plates to be installed more easily.

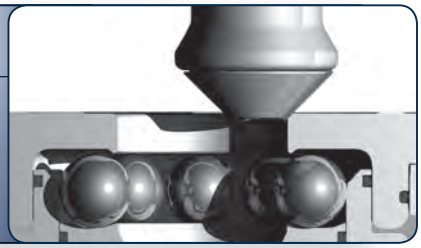

Alignment

Unique design eliminates the need for perfect lifts on entry and exit.

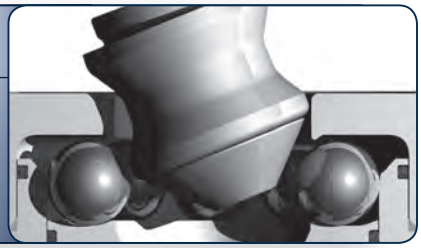

Mechanical Locking System

Experience high holding force without the need to maintain hydraulic pressure.

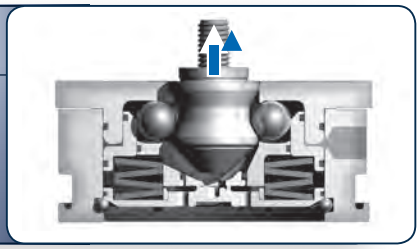

Large Ball Diameter

Provides increased strength and even load distribution.

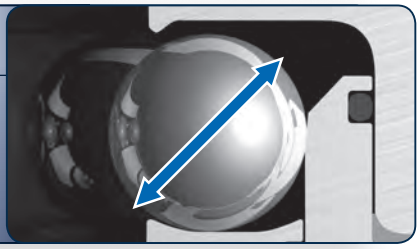

No Ball Cage

Free movement of the bearing balls reduces friction.

Form Fit Ball Channel

Tapered contact areas eliminate point loads and reduce failures.

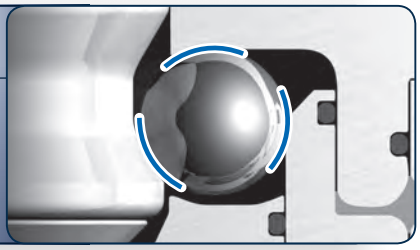

Three-Point Load Distribution

Equal load spacing optimizes force distribution.

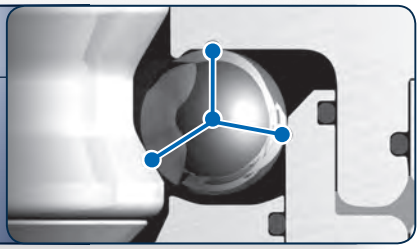

Integrated Safety System

Process-sure clamping module can always be opened, eliminating the need to forcibly remove modules if a failure should occur.

Clamping and Positioning

On each fixture use:

- 1 – Zero Point Pull Stud
- 1 – Timing Pull Stud
- The Zero Point and Timing Stud should be perpendicular
- Use any combination of clearance and/or protection Pull Stud

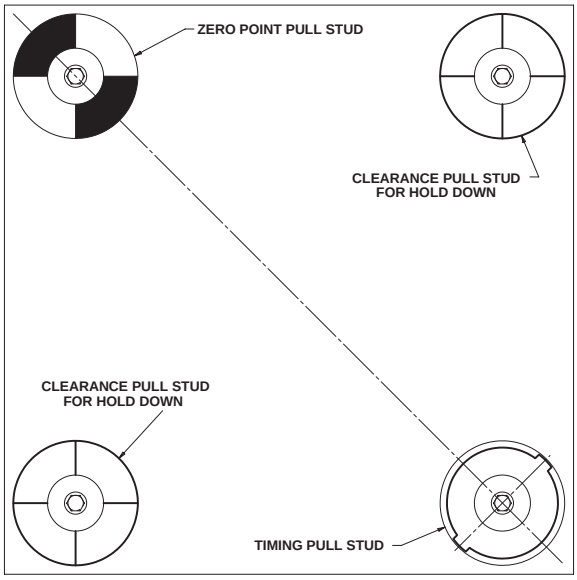

Dimensions for machining pull stud mountings

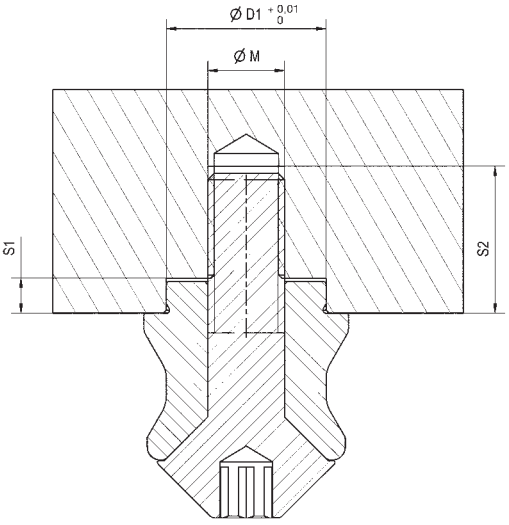

Size	ØD1	ØM	S1	S2
K5	10	M6	2.5	12
K10	15	M8	3.5	16
K20	25	M12	5.5	23
K40	25	M16	5.5	30

Note:

- Pull Stud with internal thread for clamping from above
- Pull Studs with different diameter D1, preventing interchange of the Zero Point, timing and clearance Pull Stud during installation.
- Pull Stud for series production, (notch type), Floating Pull Stud for compensation of thermal expansion
- Automatic lifting of the pallet / fixture

Figure:
Shown with Pull Stud and engagement screw

2-Way Clamping Station

Hydraulic Unlocking

Repeatability < 0.005 mm (0.0002")

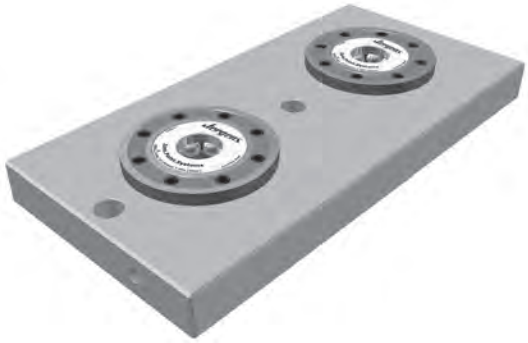

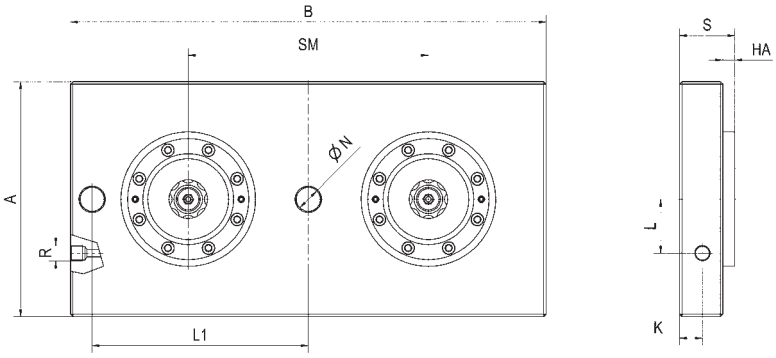

Part Number	Size	Pull-In/Locking Force up to kN / (lbs)	A	B	HA	K	L	L1	ØN	R	S	SM	Kg
303289	20	2 x 20 / (2 x 4500)	196	396	10	19	45	180	20	G1/4	46	200	21.9
303297	40	2 x 40 / (2 x 9000)	296	546	15	26	57	250	25	G1/4	61	320	59.5

All linear dimensions in (mm)

Note: On request, we can incorporate mounting holes to your requirements in the base plate. Other dimensions, gauges and number of clamping module layouts on request.

4-Way Clamping Station

Hydraulic Unlocking

Repeatability < 0.005 mm (0.0002")

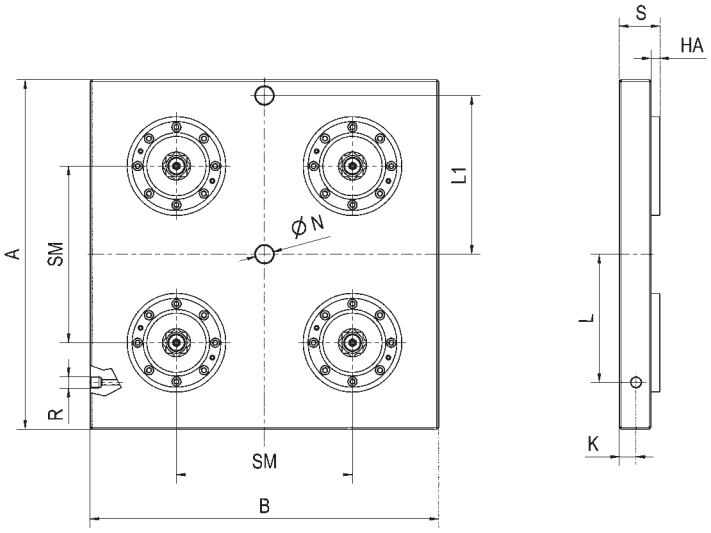

Part Number	Size	Pull-In/Locking Force up to kN / (lbs)	A	B	HA	K	L	L1	ØN	R	S	SM	Kg
303321	20	4 x 20 / (4 x 4500)	396	396	10	18	148	180	20	G1/4	46	200	44.0
303339	40	4 x 40 / (4 x 9000)	546	546	15	26	217	250	25	G1/4	61	320	110.0

All linear dimensions in (mm)

Note: On request, we can incorporate mounting holes to your requirements in the base plate. Other dimensions, gauges and number of clamping module layouts on request.

Pull Studs

K5 Modules

Hardened Stainless Steel, for hydraulic and pneumatic clamping modules

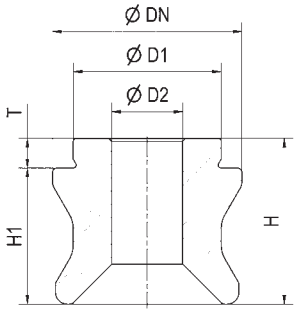

Zero Point Timing Clearance

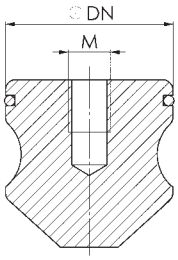

Protection Pull Stud

Part Number	Size	Description	ØDN	ØD1	ØD2	H	H1	M	T	g	Engagement Screw PN
306019	K5	Zero Point Stud	15.0	10	6	12.7	10.2	—	2.5	15	306092
306035	K5	Timing Stud	15.0	10	6	12.7	10.2	—	2.5	15	306092
306050	K5	Clearance Stud	14.8	10	6	12.7	10.2	—	2.5	15	306092
306076	K5	Protection Plug	14.8	—	—	10.2	—	M 6	8.0	12	—

K10 Modules

Hardened Stainless Steel, for hydraulic and pneumatic clamping modules

Part Number	Size	Description	ØDN	ØD1	ØD2	H	H1	M	T	g	Engagement Screw PN
303610	K10	Zero Point Stud	22.0	15	8	19	16	—	3	30	303578
303636	K10	Timing Stud	22.0	15	8	19	16	—	3	30	303578
304519	K10	Clearance Stud	21.8	15	8	19	16	—	3	30	303578
304535	K10	Protection Plug	21.8	—	—	16	—	M 8	12	30	—

K20 Modules

Hardened Stainless Steel, for hydraulic and pneumatic clamping modules

Part Number	Size	Description	ØDN	ØD1	ØD2	H	H1	M	T	g	Engagement Screw PN
303149	K20	Zero Point Stud	32.0	25	12	28	23	—	5	110	303222
303156	K20	Timing Stud	32.0	25	12	28	23	—	5	110	303222
303164	K20	Clearance Stud	31.8	25	12	28	23	—	5	110	303222
303172	K20	Protection Plug	31.8	—	—	23	—	M8	16	110	—

K40 Modules

Hardened Stainless Steel, for hydraulic and pneumatic clamping modules

Part Number	Size	Description	ØDN	ØD1	ØD2	H	H1	M	T	g	Engagement Screw PN
303180	K40	Zero Point Stud	40.0	25	16	34	29	—	5	180	303230
303198	K40	Timing Stud	40.0	25	16	34	29	—	5	180	303230
303206	K40	Clearance Stud	39.8	25	16	34	29	—	5	180	303230
303214	K40	Protection Plug	39.8	—	—	29	—	M8	20	180	—

Pull Stud With Internal Thread

Hardened for hydraulic and pneumatic clamping modules

Part Number	Size	Description	ØDN	ØD1	ØD2	M	S1	U	T	g
427021	K20	Zero Point Stud	32.0	25	37	M12	5.5	18	5	136
427047	K20	Timing Stud	32.0	25	37	M12	5.5	18	5	136
427062	K20	Clearance Stud	31.6	25	37	M12	5.5	18	5	136

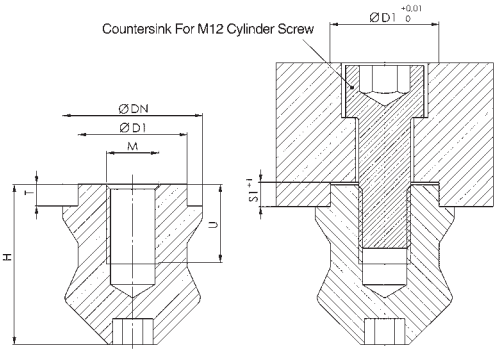

Floating Pull Stud

Hardened for hydraulic and pneumatic clamping modules

Part Number	Size	Description	ØDN	ØD2	H1	g
340059	K10	Zero Point Stud	21.8	12.0	16	25
305912	K20	Timing Stud	31.8	15.5	23	80
426882	K40	Clearance Stud	39.8	20.0	29	160

Note: The floating pull stud is supported by bearings so that it is axially mobile and is used when large distance and angle tolerances between the stud holes have to be compensated. The stud has only a holding function and does not take on any lateral load.

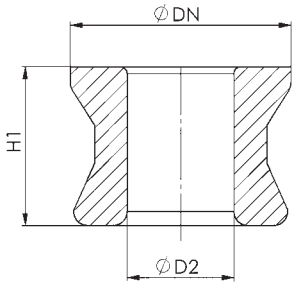

Engagement Screw For Floating Pull Stud

Strength class 10.9

Part Number	Size	Description	ØD2	M	L	L1	L2	L3	g
340034	K10	Zero Point Stud	11.0	M8	35	6	16.1	12.9	24
305938	K20	Timing Stud	13.5	M10	50	9	23.1	17.9	55
426908	K40	Clearance Stud	17.0	M12	59	10	29.1	19.9	100

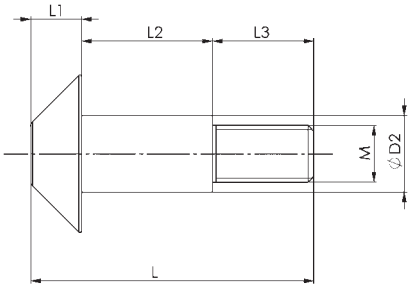

Horizontal Engagement Screws

Strength class 10.9

For horizontal rapid clamping cylinder on page 57

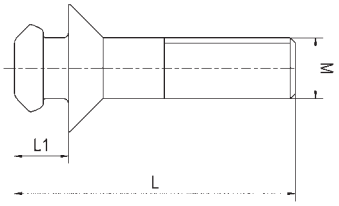

Part Number	Size	M	L	L1	g
303248	K20	M12	56	10.5	100
303255	K40	M16	73	13.0	200

Engagement Screws For Pull Studs

Strength class 10.9

For installation and surface mounted clamping modules

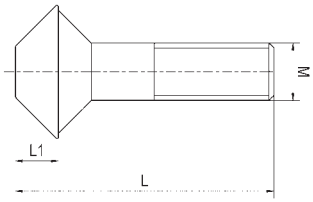

Part Number	Size	M	L	L1	g
306092	K5	M 6	25	3.4	18
303578	K10	M 8	37	6.0	30
303222	K20	M12	54	9.0	70
303230	K40	M16	69	10.0	130

Threaded Clamping Modules (K5)

Screw-In Version
Hydraulic Unlocking

Cover and piston hardened.
Repeatability < 0.005 mm (0.0002")

With a small footprint for installation in base plates, machine tables, clamping profiles, columns and towers, swivel bridges, machine pallets and clamping pallets.

- Installation diagrams on request

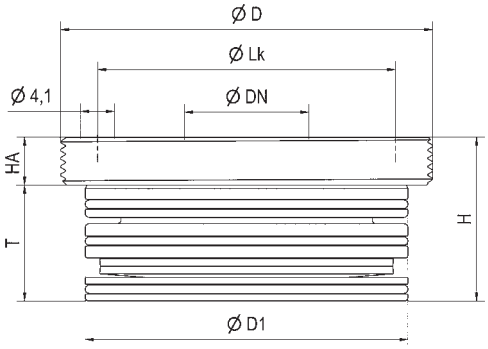

Hardened Stainless Steel

Part Number	Size	Pull-In/Locking Force up to kN / (lbs)	Holding Force kN / (lbs)	ØD	ØDN	ØD1	H	HA	ØLK	T	g
480244	K5	5 / (1100)	13 / (2900)	M45 x 1	15	39	19.8	5.8	36	14	300

All linear dimensions in (mm)

Note: Threaded clamping module with a low installation height of 19.8 mm and an installation diameter of 45 mm (M45 x 1).
Hydraulic supply and pressure is only needed for unclamping (min. 50 bar / 725psi, max. 60 bar / 870psi). The threaded clamping module is mechanically locked in the clamped position. The unique mechanical locking system results in virtually no vibration even with extensive machining forces. Further more, there are no cumbersome lines or dangers of leakage. The contact surface is the upper surface of the housing. The hydraulic design has 1 connection: 1 x unclamping

Screw-in Version
Pneumatic Unlocking

Cover and piston hardened.
Repeatability < 0.005 mm (0.0002")

With a small footprint for installation in base plates, machine tables, clamping profiles, columns and towers, swivel bridges, machine pallets and clamping pallets. Pneumatic modules are optimally suited for use in the food, pharmaceutical and chemical industries, as well as in oil-free applications.

- Installation diagrams on request

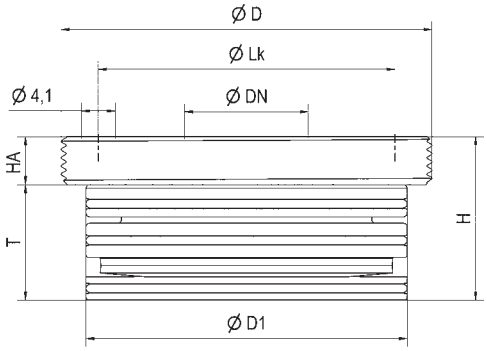

Hardened Stainless Steel

Part Number	Size	Pull-In/Locking Force up to kN / (lbs)	Holding Force kN / (lbs)	ØD	ØDN	ØD1	H	HA	ØLK	T	g
480343	K5	1.5 / (330)	13 / (2900)	M45 x 1	15	39	19.8	5.8	36	14	300

All linear dimensions in (mm)

Note: Threaded clamping module with a low installation height of 19.8 mm and an installation diameter of 45 mm (M45 x 1).
Pneumatic pressure is needed for unclamping (min 8 bar/ 116 psi, max 12 bar/ 175 psi). For **clamping** process pneumatic pressure of min 5 bar / 75 psi, max 6 bar / 90 psi is required briefly in order to achieve defined pull-in force. The threaded clamping module is mechanically locked in the clamped position. The unique mechanical locking system results in virtually no vibration even with extensive machining forces. Further more, there are no cumbersome lines or dangers of leakage. The pneumatic design has 2 connections: 1 x unclamping / 1 x clamping.

Installation Clamping Modules (K10, K20, K40)

Hydraulic Unlocking

Cover and piston hardened.
Repeatability < 0.005 mm (0.0002")

With a small foot-print for installation in base plates, machine tables, clamping profiles, columns and towers, swivel bridges, machine pallets and clamping pallets.

- Installation diagrams on request

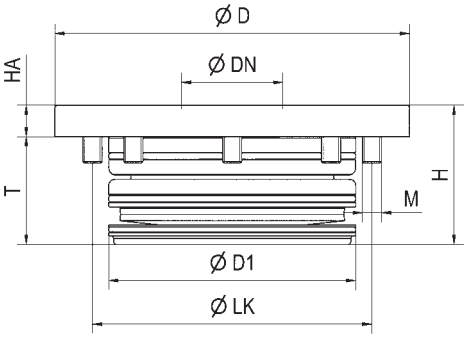

Hardened Stainless Steel

Part Number	Size	Pull-in/locking force up to kN / (lbs)	Holding force kN / (lbs)	Blow out	ØD	ØDN	ØD1	H	HA	ØLK	M	T	Kg
480228	K10	10 / (2250)	25 / (5620)	Yes	78	22	50	30	7	60	M5	23	0.45
480186	K20	20 / (4500)	55 / (12350)	Yes	112	32	78	44	10	88	M6	34	1.40
480525	K40	40 / (9000)	105 / (23600)	Yes	148	40	102	57	15	118	M8	42	3.40

All linear dimensions in (mm)

Note: Threaded installation clamping modules have high holding and pull-in forces with very small installation dimensions.
Hydraulic supply and pressure is only needed for unclamping (min. 50 bar / 725psi, max. 60 bar / 870psi). The threaded clamping module is mechanically locked in the clamped position. The unique mechanical locking system results in virtually no vibration even with extensive machining forces. Further more, there are no cumbersome lines or dangers of leakage. The contact surface is the upper surface of the housing. The hydraulic design has 1 connection: 1 x unclamping

Pneumatic Unlocking

Cover and piston hardened.
Repeatability < 0.005 mm (0.0002")

With a small footprint for installation in base plates, machine tables, clamping profiles, columns and towers, swivel bridges, machine pallets and clamping pallets.

- Installation diagrams on request

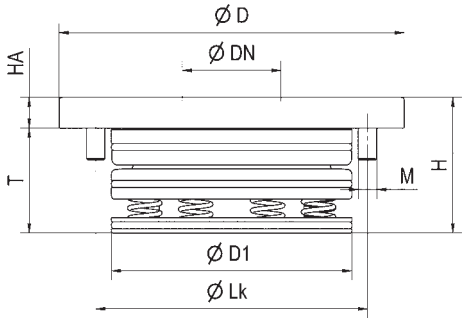

Hardened Stainless Steel

Part Number	Size	Pull-In/Locking force up to kN / (lbs)	Holding Force kN / (lbs)	Blow out	ØD	ØDN	ØD1	H	HA	ØLK	M	T	Kg
480202	K10	8 / (1800)	25 / (5620)	Yes	78	22	50	30	7	60	M5	23	0.45
480160	K20	17 / (3800)	55 / (12350)	Yes	112	32	78	44	10	88	M6	34	1.40
480541	K40	30 / (6700)	105 / (23600)	Yes	148	40	102	57	15	118	M8	42	3.40

All linear dimensions in (mm)

Note: The installation clamping modules have high holding and pull-in forces with very small installation dimensions.
Pneumatic pressure is needed for unclamping (min 8 bar/ 116 psi, max 12 bar/ 175 psi). For **clamping** process pneumatic pressure of min 5 bar / 75 psi, max 6 bar / 90 psi is required briefly in order to achieve defined pull-in force. The installation clamping module is mechanically locked in the clamped position. The unique mechanical locking system results in virtually no vibration even with extensive machining forces. Further more, there are no cumbersome lines or dangers of leakage.
The pneumatic design has 2 connections: 1 x unclamping / 1 x clamping.

Installation Clamping Modules (K10, K20) with Indexing

Low Pressure Pneumatic Unlocking

Cover and piston hardened.
Repeatability < 0.005 mm (0.0002”)

With a small fooprint for installation in base plates, machine tables, clamping profiles, columns and towers, swivel bridges, machine pallets and clamping pallets

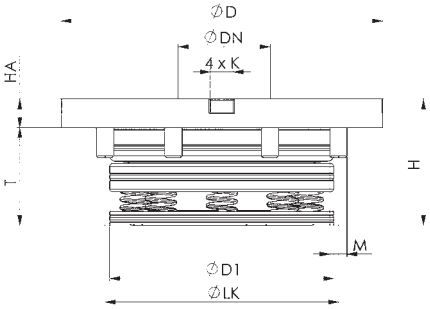

Part Number	Size	Pull-in Locking Force up to kN / (lbs)	Holding Force kN / (lbs)	Unclamp Pressure	Blow Out	D	DN	D1	H	HA	LK	M	T	Net Weight (kgs)
511139	K10	10 / (2250)	25 / (5620)	72 psi (5 bar)	Yes	112	22	78	35	10	88	M6	25	1.4
511154	K20	17 / (3800)	55 / (12350)	66 psi (4.5 bar)	Yes	138	32	102	49	15	115	M6	34	2.6

All linear dimensions in (mm)

Note: The installation clamping modules have high holding and pull-in forces with very small insatallation dimensions. Pneumatic pressure is needed for unclamping (min 4.5 bar/ 66 psi). The installation clamping module is mechanically locked in the clamped position. The unique mechanical locking system results in virtually no vibration even with extensive machining forces. Further more, there are no cumbersome lines or dangers of leakage.

The pneumatic design has 1 connection for unclamping and 1 optional connection for blowout.

Surface/Mounted Clamping Modules (K5)

Hydraulic Unlocking

Cover and piston hardened.
Repeatability < 0.005 mm (0.0002")

For mounting on machine tables, clamping profiles, columns and towers, measuring machines, assembly stations.

- Installation diagrams on request

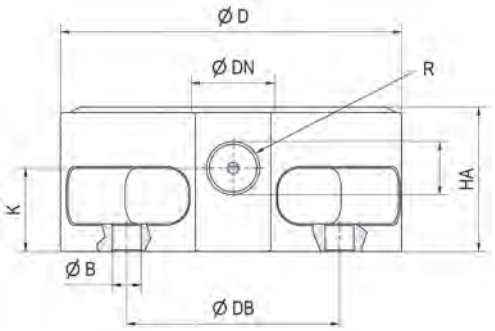

Stainless Steel

Part Number	Size	Pull-In/Locking Force up to kN / (lbs)	Holding Force kN / (lbs)	ØB	ØD	ØDB	ØDN	HA	K	R	g
480566	K5	5 / (1100)	13 / (2900)	5.8	62	54	15	26	15	G1/8	300

All linear dimensions in (mm)

Note: Hydraulic supply and pressure is only needed for unclamping (min. 50 bar / 725psi, max. 60 bar / 870psi). The installation clamping module is mechanically locked in the clamped position. The unique mechanical locking system results in virtually no vibration even with extensive machining forces. The contact surface is the upper surface of the housing. The hydraulic design has 1 connection: 1 x unclamping

Pneumatic Unlocking

Cover and piston hardened.
Repeatability < 0.005 mm (0.0002")

For mounting on machine tables, clamping profiles, columns and towers, measuring machines, assembly stations.

- Installation diagrams on request

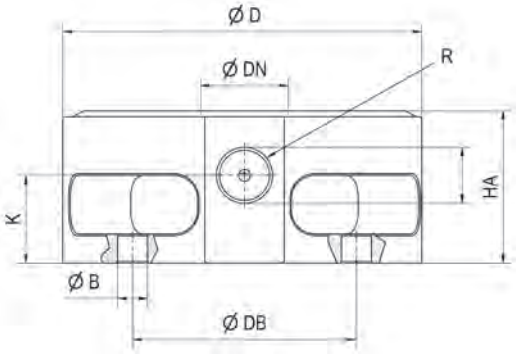

Hardened Stainless Steel

Part Number	Size	Pull-In/Locking Force up to kN / (lbs)	Holding Force kN / (lbs)	ØB	ØD	ØDB	ØDN	HA	K	R	g
480582	K5	1.5 / (330)	13 / (2900)	5.8	62	54	15	26	15	G1/8	300

All linear dimensions in (mm)

Note: Pneumatic pressure is needed for unclamping (min 8 bar/ 116 psi, max 12 bar/ 175 psi). For **clamping** process pneumatic pressure of min 5 bar / 75 psi, max 6 bar / 90 psi is required briefly in order to achieve defined pull-in force. The installation clamping module is mechanically locked in the clamped position. The unique mechanical locking system results in virtually no vibration even with extensive machining forces. The pneumatic design has 2 connections: 1 x unclamping / 1 x clamping.

Surface/Mounted Clamping Modules (K10, K20, K40)

Hydraulic Unlocking

Cover and piston hardened.
Repeatability < 0.005 mm (0.0002")

For mounting on machine tables, clamping profiles, columns and towers, measuring machines,assembly stations in connection with **clamping bracket** on page 55.

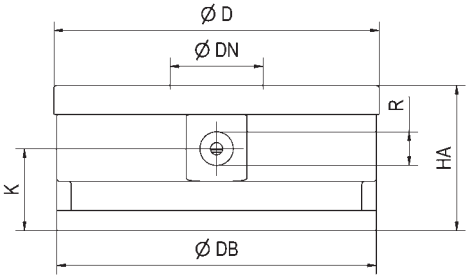

Hardened Stainless Steel

Part Number	Size	Pull-In/Locking Force up to kN / (lbs)	Holding Force kN / (lbs)	Blow out	ØD	ØDB	ØDN	HA	K	R	Kg
480608	K10	10 / (2250)	25 / (5620)	Yes	78	77.5	22	30	16.50	G1/8	0.90
480624	K20	20 / (4500)	55 / (12350)	Yes	112	110.0	32	50	28.25	G1/4	2.70
480640	K40	40 / (9000)	105 / (23600)	Yes	148	146.0	40	62	32.50	G1/4	3.80

All linear dimensions in (mm)

Note: Hydraulic supply and pressure is only needed for unclamping (min. 50 bar / 725psi, max. 60 bar / 870psi). The installation clamping module is mechanically locked in the clamped position. The unique mechanical locking system results in virtually no vibration even with extensive machining forces. Further more, there are no cumbersome lines and no danger of leakage. The contact surface is the upper surface of the housing. The hydraulic design has 1 connection: 1 x unclamping

Pneumatic Unlocking

Cover and piston hardened.
Repeatability < 0.005 mm (0.0002")

For mounting on machine tables, clamping profiles, columns and towers, measuring machines,assembly stations in connection with **clamping bracket** on page 55.

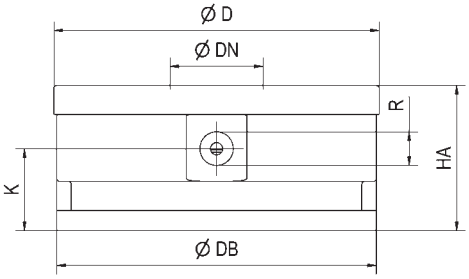

Hardened Stainless Steel

Part Number	Size	Pull-In/Locking Force up to kN / (lbs)	Holding Force kN / (lbs)	Blow out	ØD	ØDB	ØDN	HA	K	R	Kg
480665	K10	8 / (1800)	25 / (5620)	Yes	78	77.5	22	30	16.50	G1/8	0.90
480681	K20	17 / (3800)	55 / (12350)	Yes	112	110.0	32	50	28.25	G1/4	2.60
480707	K40	30 / (6700)	105 / (23600)	Yes	148	146.0	40	62	32.50	G1/4	6.40

All linear dimensions in (mm)

Note: Pneumatic pressure is needed for unclamping (min 8 bar/ 116 psi, max 12 bar/ 175 psi). For **clamping** process pneumatic pressure of min 5 bar / 75 psi, max 6 bar / 90 psi is required briefly in order to achieve defined pull-in force. The installation clamping module is mechanically locked in the clamped position. The unique mechanical locking system results in virtually no vibration even with extensive machining forces. The pneumatic design has 2 connections: 1 x unclamping / 1 x clamping.

Clamping Bracket for Surface/Mounted Clamping Modules

Black Nitrided

Clamping flanges are used to fasten raised/mounted clamping modules on the machine table. See pages 53–54.

- Special clamping flanges for various T-slot tables
- Clamping flange and housing manufactured as a single piece

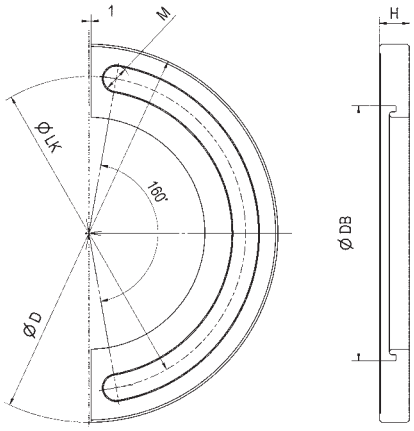

Stainless Steel

Part Number	Size	Pieces Per Module	ØD	ØDB	H	ØLK	M	g
303495	10	2	114	77.5	7.75	94	8.5	180
302901	20	2	164	110.0	13.00	136	11.0	400
302919	40	2	202	146.0	16.00	172	13.0	550

All linear dimensions in (mm)

Flange Type Installation Modules with Centering and Cover Rings

Features:

- Oil supply by pipes or manifolds
- Integrated centering
- Provided as assembled unit

Benefits:

- Simple design and manufacturing of adaptor plate
- Weight saving due to less thickness for adaptor plate
- Easy to adapt to existing mounting angles and cubes

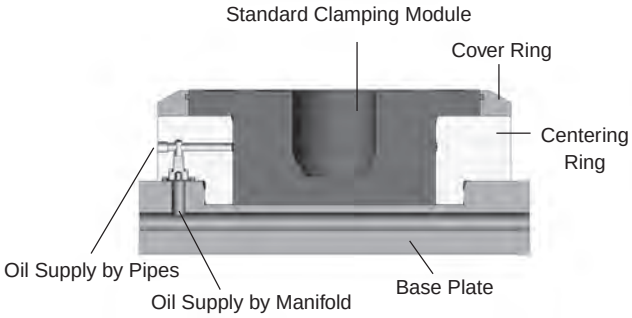

Installation comparison

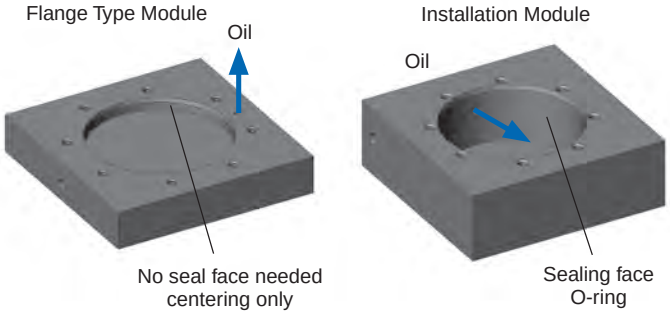

Flange Type Installation Modules with Centering and Cover Rings

Hydraulic Release

Cover and piston hardened.
Repeatability < 0.005 mm (0.0002")

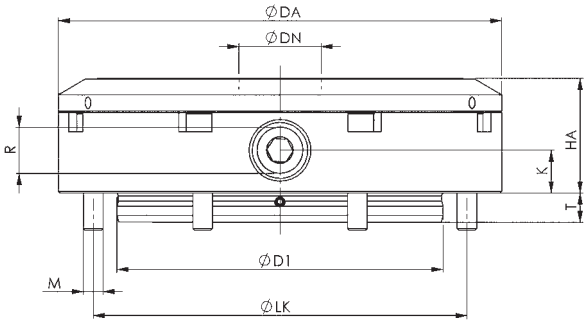

Hardened Stainless Steel

Part Number	Size	Pull-In/Locking force up to kN / (lbs)	Holding Force kN / (lbs)	Blow out	ØDA	ØDN	ØD1	HA	K	ØLK	M	R	T	Kg
480301	K10	10 / (2250)	25 / (5620)	Yes	100	22	67	24	9	90	M5	G1/8	5.9	1.35
480269	K20	20 / (4500)	55 / (12350)	Yes	136	32	100	35	13	124	M6	G1/8	8.9	3.76
480723	K40	40 / (9000)	105 / (23600)	Yes	180	40	120	45	15	163	M8	G1/8	11.9	4.97

All linear dimensions in (mm)

Note: Combines features of the Threaded Module and Raised/Mounted module. Especially designed when installation space is limited and base plate or angle plate has relatively thin dimensions. The positioning of the module is simple and accurate when using the precision flange diameter. Hydraulic supply is possible by manifolds or pipes/hoses. Hydraulic supply and pressure is only needed for unclamping (min. 50 bar / 725psi, max. 60 bar / 870psi). The module is mechanically locked in the clamped position. The unique mechanical locking system results in virtually no vibration even with extensive machining forces. The hydraulic design has 1 connection: 1 x unclamping

Pneumatic Release

Cover and piston hardened.
Repeatability < 0.005 mm (0.0002")

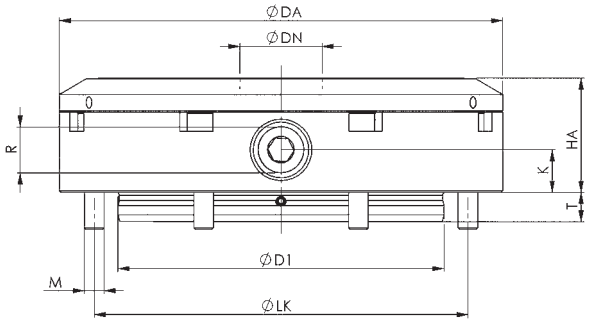

Hardened Stainless Steel

Part Number	Size	Pull-In/Locking force up to kN / (lbs)	Holding Force kN / (lbs)	Blow out	ØDA	ØDN	ØD1	HA	K	ØLK	M	R	T	Kg
480327	K10	8 / (1800)	25 / (5620)	—	100	22	67	24	9	90	M5	G1/8	5.9	1.35
480285	K20	17 / (3800)	55 / (12350)	—	136	32	100	35	13	124	M6	G1/8	8.9	4.97
480749	K40	30 / (6700)	105 / (23600)	—	180	40	120	45	15	163	M6	G1/8	11.9	4.97

All linear dimensions in (mm)

Note: Combines features of the Threaded Module and Raised/Mounted module. Especially designed when installation space is limited and base plate or angle plate has relatively thin dimensions. The positioning of the module is simple and accurate when using the precision flange diameter. Pneumatic supply is possible by manifolds or pipes/hoses. Pneumatic pressure is needed for unclamping (min 8 bar/ 116 psi, max 12 bar/ 175 psi). For **clamping** process pneumatic pressure of min 5 bar / 75 psi, max 6 bar / 90 psi is required briefly in order to achieve defined pull-in force. The installation clamping module is mechanically locked in the clamped position. The unique mechanical locking system results in virtually no vibration even with extensive machining forces. The pneumatic design has 2 connections: 1 x unclamping / 1 x clamping.

Horizontal Rapid-Clamping Cylinder

Hydraulic Unlocking

Cover and piston hardened.
Repeatability < 0.005 mm (0.0002")

- For easy handling of heavy fixtures
- Makes palletization very quick by hooking into a hole at the top and moving downwards
- No searching for the holes
- No damage to Zero Point bore or pull studs

Hardened Stainless Steel

Part Number	Size	Pull-In/Locking Force up to kN / (lbs)	Holding Force kN / (lbs)	Blow Out	Advance Motion, Hydr. Suspension Piston	Kg
303065	K20	20 / (4500)	55 / (12350)	—	—	2.1
306217	K20	20 / (4500)	55 / (12350)	—	Yes	2.1
303107	K40	40 / (9000)	105 / (23600)	—	—	5.2
306258	K40	40 / (9000)	105 / (23600)	—	Yes	5.2

Note: As standard, there is a manual or hydraulic advance motion of the suspension piston.

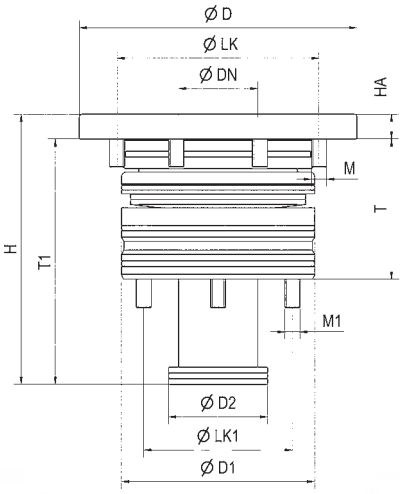

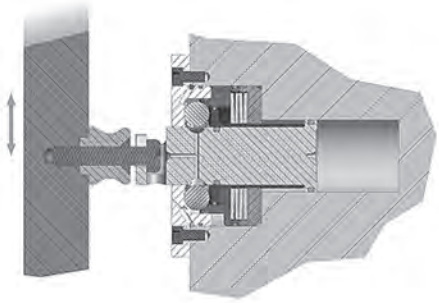

Release Mode

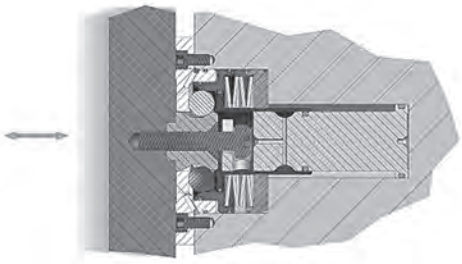

Clamped Mode

Maximize the Benefits of Your 5-Axis Machine

Getting your spindle and cutting tool close to the workpiece without running into obstructions is a challenge on a 5-axis machine. Jaws and other vise components, and even the machine table itself, can restrict your access and prevent you from machining multi-sided parts. Your only choice is stopping the machine and repositioning your part…

…until now.

The basis of the system is very simple: ***RAISE*** *the part,* ***RIGIDLY*** *clamp it, and* ***RAPIDLY*** *change it out.*

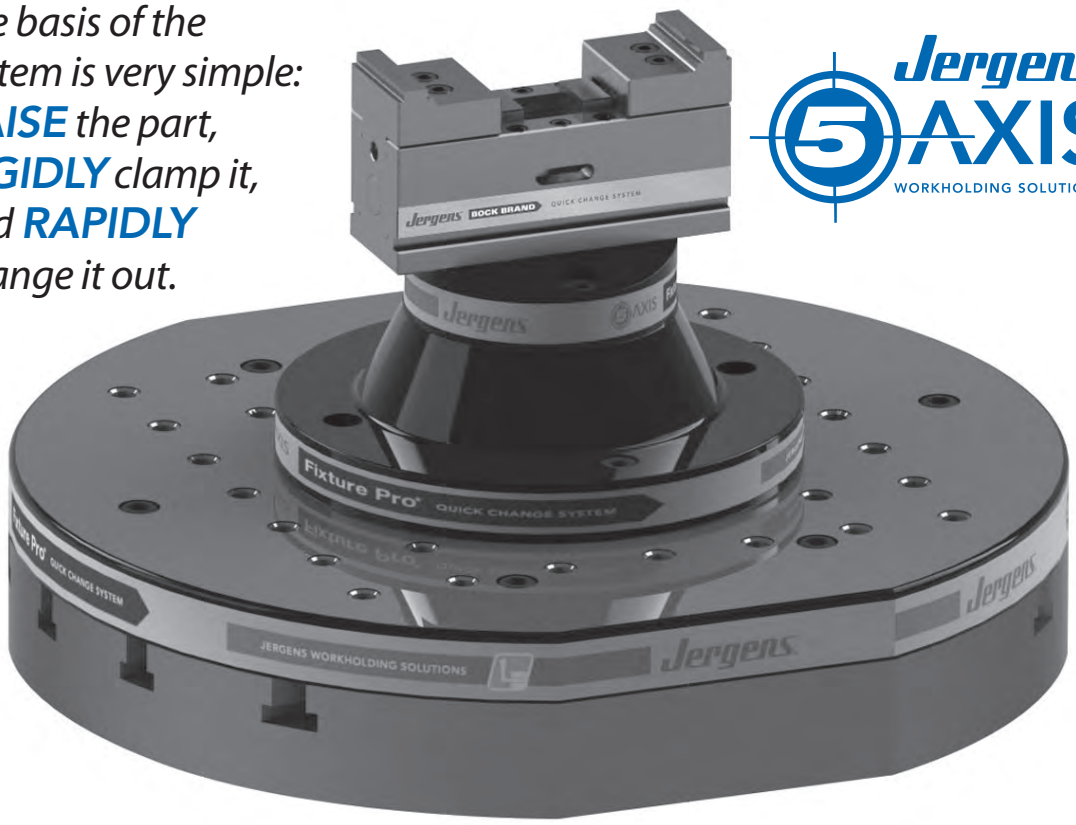

Jergens 5 AXIS WORKHOLDING SOLUTIONS

Jergens' unique modular system features a variety of riser sizes and styles to get your part off the table and allow unrestricted access. This system was built with rigidity in mind, from uniquely designed pull studs to 5-axis vises and dovetail clamps. This added rigidity helps maintain accuracy, even in your most aggressive roughing and finishing operations.

Best of all, you can integrate this system with our best-selling Ball Lock® Mounting System, for quick change capabilities even at the subplate level.

SYSTEM FEATURES & BENEFITS

Modular approach designed for 5-axis machining

- Unrestricted access to the part
- Extremely customizable to your application

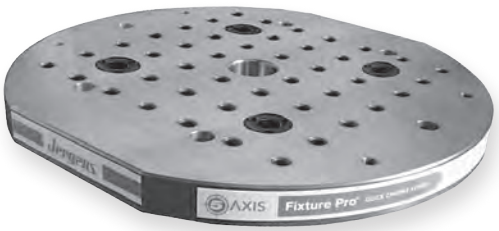

Uniquely designed pull studs and vises with high clamping forces

- Added rigidity for aggressive operations
- Higher cutting rates

Quality construction – Components made from high strength steel and aluminum

- Long life & durability

Integration of unique quick change elements at virtually every level of your setup

- Complete part to part changeover in under 60 seconds
- Maximizes your machine table
- Provides additional productivity gains

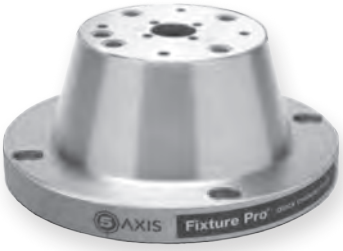

How Does It Work?

STEP 1: KNOW YOUR MACHINE TABLE

Jergens' 5-Axis Quick Change Fixturing System provides incredible flexibility. The Fixture Pro® System can mount to any machine or rotary table. Contact Jergens customer service at 877-426-2504 to help you select the components for your application.

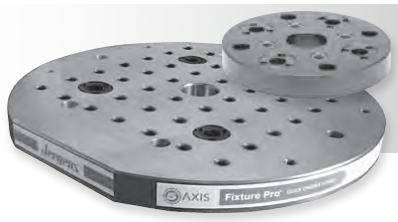

STEP 2: SELECT YOUR SUBPLATE

Subplates can be configured with either the Ball Lock® Mounting System or the QLS for quick fixture changeover at the subplate level.

STEP 3: SELECT YOUR MOUNTING COMPONENTS

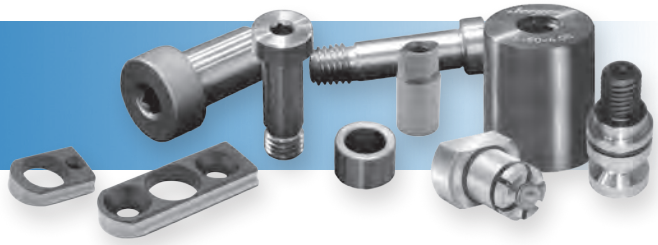

- Center locating pins
- Timing pins
- QLS bolts
- Locating Keys

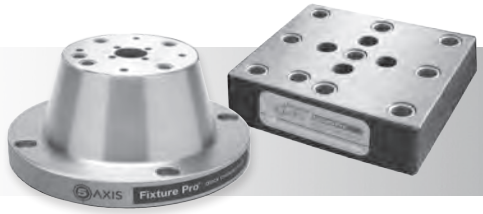

STEP 4: SELECT YOUR RISER, TOP PLATES AND MINI PALLET

Get your part off the table and allow tool clearance by selecting the right riser for your application. Rectangle, square, cone and mini risers are available in a variety of sizes. Adapter plates and the patent pending Drop & Lock™ Pallet Changer allow for lightning fast part to part changeover.

STEP 5: SELECT YOUR TOP TOOLING

Choose from a variety of incredibly strong clamping products, from dovetail vises to self-centering vises specially designed for 5-axis workholding applications.

5-Axis Vise or Dovetail Vise

Quick Change Element! Drop & Lock™ Pallet Changer

You can use a simple adapter plate instead of the Drop & Lock™ Pallet Changer

Choose from a range of risers

Accessories and hardware help you customize

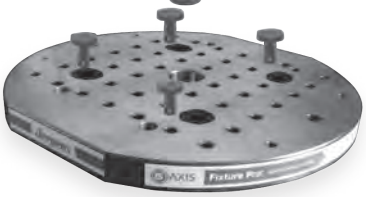

Quick Change Element! Choose from a variety of standard subplates. Configure with Ball Lock® or QLS for quick change capabilities at the subplate level.

Feature Focus:
The Drop & Lock™ Pallet Changer

Simply install 2 or 4 pull studs into the bottom of your fixture or vise and literally drop it into the pallet changer. In less than two quick turns of a hex wrench, you can switch out your workpiece without re-indicating.

Drop it, lock it, and go!

Install pull studs into your fixture or vise.

Drop your fixture or vise into the Vise Adapter.

Two quick turns of a hex wrench and you're ready to machine. No re-indicating!

5-Axis Subplates

Round

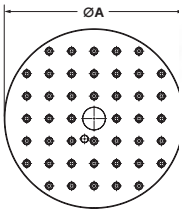

Square

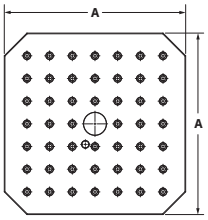

- Material: 1018 Steel
- Thickness Tolerance ±0.005
- Flat & Parallel within .0005"/Ft. (.013mm)
- Subplates do not include mounting holes
- Includes Pre-Installed QLS Bushings

Part Number	Style	A (mm)	B (mm)	Thickness of Subplate (mm)	Locating	Mounting Type	Mounting Grid	Weight lbs (Kgs)
5SP130	Round	130	130	35	Center (50H7), Timing Pin	12mm SHCS	12mm x 50mm	6.3 (2.86)
5SP160	Round	160	160	35	Center (50H7), Timing Pin	12mm SHCS	12mm x 50mm	10.36 (4.7)
5SP210	Round	210	210	35	Center (50H7), Timing Pin	12mm SHCS	12mm x 50mm	18.83 (8.54)
5SP250	Round	250	250	35	Center (50H7), Timing Pin	12mm SHCS	12mm x 50mm	26.5 (12)
5SP310	Round	310	310	35	Center (50H7), Timing Pin	12mm SHCS	12mm x 50mm	41.89 (19)
5SP400	Round	400	400	35	Center (50H7), Timing Pin	12mm SHCS	12mm x 50mm	70.44 (31.95)
5SP500	Round	500	500	35	Center (50H7), Timing Pin	12mm SHCS	12mm x 50mm	110.9 (50.3)
5SP630	Round	630	630	35	Center (50H7), Timing Pin	12mm SHCS	12mm x 50mm	176.8 (80.2)
5SP800	Round	800	800	35	Center (50H7), Timing Pin	12mm SHCS	12mm x 50mm	296.3 (134.4)

Part Number	Style	A (mm)	B (mm)	Thickness of Subplate (mm)	Locating	Mounting Type	Mounting Grid	Weight lbs (Kgs)
5SP400S	Square	400	400	35	Center (50H7), Timing Pin	12mm SHCS	12mm x 50mm	88 (39.9)
5SP500S	Square	500	500	35	Center (50H7), Timing Pin	12mm SHCS	12mm x 50mm	139.3 (63.2)

Part Number	Style	A (mm)	B (mm)	Thickness of Subplate (mm)	Locating	Mounting Type	Mounting Grid	Weight lbs (Kgs)
5QP130020	VMC	130	250	35	Center (12mm), Timing Pin	12mm SHCS	12mm x 50mm	19.86 (9.01)
5QP250020	VMC	250	340	35	Center (12mm), Timing Pin	12mm SHCS	12mm x 50mm	51.75 (23.47)

VMC 250mm

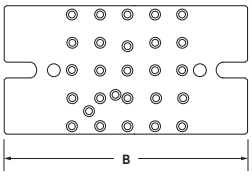

Used for mounting risers & other Fixture Pro® items to a Vertical Machining Center

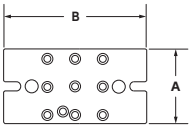

VMC 130mm

5-Axis Risers, Mini & Barbell Style – Steel or Aluminum

Fixture Pro® 5-Axis Risers raise, position and locate the part off the machine or rotary table so the part is accessible for machining all 5 sides. Mounts to tables with Sine Fixture Keys, Fixture Pro® Machine Keys, SHCS or QLS Grids.

- Material: 1018 Steel
- Thickness Tolerance ±0.002 (.05mm)
- Flat & Parallel within: .0005"/Ft. (.013mm)
- Finish: Black Oxide or Aluminum

Aluminum Mini

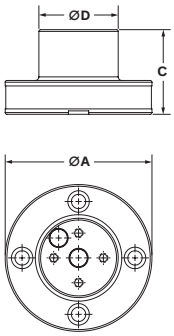

Mini Risers – Designed for use with small pallet machine tools and the 75mm platform top tooling.

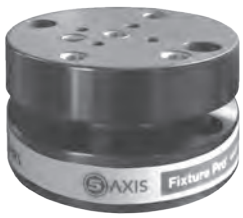

130mm Barbell

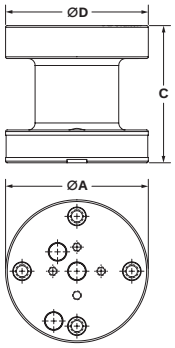

Part Number Steel	Part Number Aluminum	Style	A (mm)	B (mm)	C (mm)	D (mm)	Locating Keyway, Timing Pin	Mounting Type	Mounting Grid	Weight lbs (Kgs) Steel	Weight lbs (Kgs) Aluminum
5RS130001	**5RS130004**	Mini	130	—	75	70.3	Center (50H7)	QLS, 12mm SHCS	12mm x 50mm	8.21 (3.72)	2.84 (1.29)
5RS130002	**5RS130005**	Barbell Low	130	—	75	130	Center (50H7)	QLS, 12mm SHCS	12mm x 50mm	12.82 (5.82)	4.44 (2.01)
5RS130003	**5RS130006**	Barbell Tail	130	—	125	130	Center (50H7)	QLS, 12mm SHCS	12mm x 50mm	16.8 (7.62)	5.82 (2.64)
5RS250001	**5RS250005**	Barbell Low	250	—	75	250	Center (50H7)	QLS, 12mm SHCS	12mm x 50mm	88.6 (40.2)	20.5(9.3)
5RS250002	**5RS250006**	Barbell Tail	250	—	125	250	Center (50H7)	QLS, 12mm SHCS	12mm x 50mm	93.3 (42.3)	25.34 (11.5)

250mm Barbell

5-Axis Risers, Flanged, Rectangle or Square Style – Steel or Aluminum

Fixture Pro® 5-Axis Risers raise, position and locate the part off the machine or rotary table so the part is accessible for machining all 5 sides. Mounts to tables with Sine Fixture Keys, Fixture Pro® Machine Keys, SHCS or QLS Grids.

- Material: 1018 Steel
- Thickness Tolerance ±0.002 (.05mm)
- Flat & Parallel within: .0005"/Ft. (.013mm)
- Finish: Black Oxide or Aluminum

Square and Rectangle Risers – For use with 3-axis VMC's and 4-axis HMC's to reduce spindle dead zones. Mounts to table using T-Slots with SHCS & Jergens Sine Fixture Keys, or Fixture Pro® Locating Pins and Keys.

Tapered Flanged Aluminum Riser

Straight Flanged Steel Riser

Tapered Flanged Steel Riser

SQ Riser & Pallet

Rectangle Steel Riser

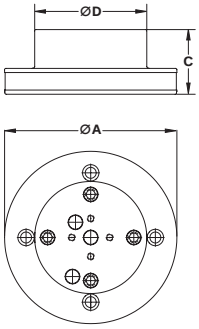

Straight Flanged Riser

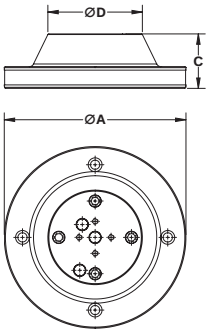

Tapered Flanged Riser

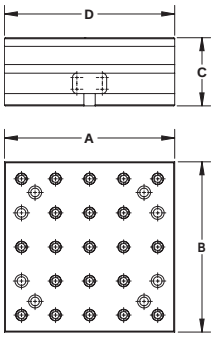

Square Riser

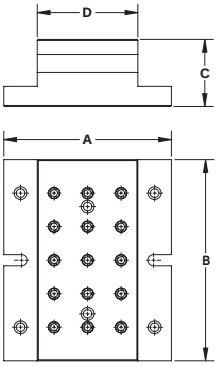

Rectangle Riser

Part Number Steel	Part Number Aluminum	Style	A (mm)	B (mm)	C (mm)	D (mm)	Locating Keyway, Timing Pin	Mounting Type	Mounting Grid	Weight lbs (Kgs) Steel	Weight lbs (Kgs) Aluminum
5RS250003	**5RS250007**	Tapered Flanged	250	—	75	130	Center (50H7)	QLS, 12mm SHCS	12mm x 50mm	36.8 (16.7)	12.75 (5.78)
5RS250004	**5RS250008**	Tapered Flanged	250	—	125	130	Center (50H7)	QLS, 12mm SHCS	12mm x 50mm	53.2 (24.1)	18.42 (8.36)
5RS150001	**5RS150002**	Rectangle	250	300	100	150	Center (50H7)	QLS, 12mm SHCS	12mm x 50mm	87.0 (39.5)	30.67 (13.9)
5RS250009	**5RS250010**	Square	250	250	100	250	Center (50H7)	QLS, 12mm SHCS	12mm x 50mm	77.3 (35.1)	28.0 (12.7)

Rotary Table Risers

Part Number Steel	Part Number Aluminum	Style	A (mm)	B (mm)	C (mm)	D (mm)	Locating Keyway, Timing Pin	Mounting Type	Mounting Grid	Weight lbs (Kgs) Steel	Weight lbs (Kgs) Aluminum
5RS200007*	**5RS200010***	Straight Flanged	200	—	75	130	Center (50H7)	QLS, 12mm SHCS	12mm x 50mm	24.0 (10.9)	8.4 (3.8)
5RS200008*	**5RS200011***	Straight Flanged	200	—	125	130	Center (50H7)	QLS, 12mm SHCS	12mm x 50mm	36.0 (16.4)	12.4 (5.6)

* 200mm risers are designed to work with rotary tables. If intended for use on Fixture Pro® subplates, 4 extra mounting holes are needed. Call 877-426-2504 for assistance.

5-Axis Riser Top Plates

Convert the riser into a QLS grid for precision mounting of any workholding fixture, including the entire family of Fixture Pro® Top Tooling. Available in square or round styles.

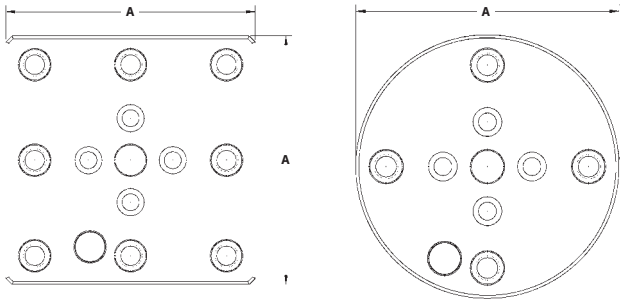

- Material: 1018 Steel
- Thickness Tolerance ±0.005 (.13mm)
- Flat & Parallel within: .0005"/Ft. (.013mm)
- Includes: Hardened Bushings

Part Number	Style	A (mm)	Thickness of Plate (mm)	Locating	Mounting Type	Mounting Grid	Weight lbs (Kgs)
5TP130002	Round	130	35	Center, Timing Pin	8mm SHCS	12mm x 50mm	7.09 (3.22)
5TP250002	Round	250	35	Center, Timing Pin	8mm SHCS	12mm x 50mm	27.02 (12.26)
5TP130001	Square	130	35	Center, Timing Pin	8mm SHCS	12mm x 50mm	8.97 (4.07)
5TP250001	Square	250	35	Center, Timing Pin	8mm SHCS	12mm x 50mm	34.81 (15.79)

5-Axis Vise Adapter Plates

Convert the Jergens 5-axis vise into a QLS grid for precision mounting of any Fixture Pro® modular system part that requires a match with the QLS grid.

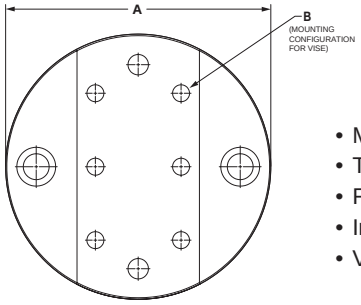

- Material: 1018 Steel
- Thickness Tolerance ±0.005 (.13mm)
- Flat & Parallel within: .0005"/Ft. (.013mm)
- Includes: Hardened Bushings
- Vise Adapter Pin Required 5LP25M10

Part Number	Style	A (mm)	B (Vise Part. No.)	Thickness of Plate (mm)	Locating	Mounting Type	Mounting Grid	Weight lbs (Kgs)
5VA130001	Round	130	80000, 80400	35	QLS, Dowel Pin	12mm SHCS	12mm x 50mm	6.9 (3.1)
5VA250001	Round	250	80100	35	Center, Timing, QLS	12mm SHCS	12mm x 50mm	27 (12.2)
5VA130002	Round	130	80000, 80400	35	Quick Change Stud	20mm QCS	60mm x 60mm	7.4 (3.4)
5VA250002	Round	250	80100	35	Quick Change Stud	20mm QCS	120mm x 120mm	27.5 (12.5)

Vise Locator Adapter Pin 5LP25M10 Available. Please call 877-426-2504 for more information.

5-Axis Blank Fixture Plates

Mount fixtures that already have mounting holes that do not match the QLS grid. Available in round and square styles.

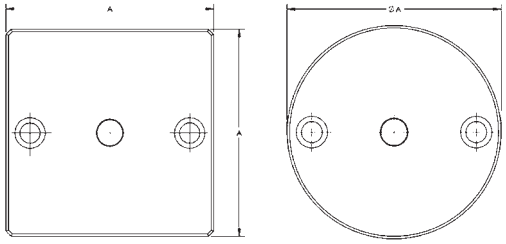

- Material: 1018 Steel
- Thickness Tolerance ±0.005 (.13mm)
- Flat & Parallel within: .0005"/Ft. (.013mm)
- Includes: Hardened Bushings

Part Number	Style	A (mm)	Thickness of Plate (mm)	Locating	Mounting Type	Weight lbs (Kgs)
5FP130002	Round	130	35	Center, Timing Pin	12mm SHCS	7.41 (3.36)
5FP250002	Round	250	35	Center, Timing Pin	12mm SHCS	28.65 (13)
5FP130001	Square	130	35	Center, Timing Pin	12mm SHCS	9.62 (4.36)
5FP250001	Square	250	35	Center, Timing Pin	12mm SHCS	36.78 (16.68)

5-Axis Machinable Blanks

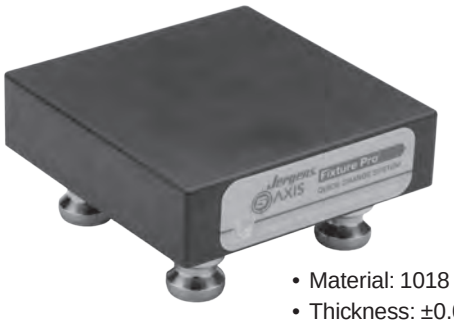

Designed for 2nd operation machining. Blanks can be machined to accept parts and clamping systems.

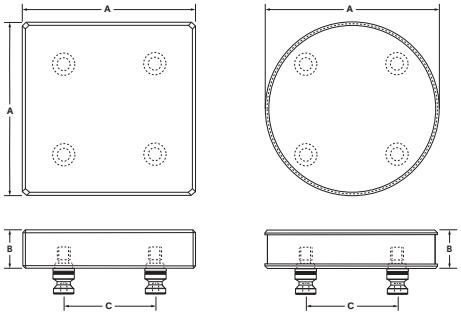

- Material: 1018 Steel/6061 Aluminum
- Thickness: ±0.005 (.13mm)
- Includes: Hardened Bushing
- Pull Studs Included

Steel Part Number	Aluminum Part Number	Style	A (mm)	B (mm)	C (mm)	Locating	Mounting Type	Mounting Grid	Weight Steel (lbs /kg)	Weight Alum (lbs/kg)	Pull Stud Size	Pull Stud Part Number
5MB130002	**5MB130004**	Square	130	35	60	Quick Change Studs	20mm QCS	60mm x 60mm	9.9 (4.5)	3.4 (1.6)	20	5QP020
5MB130003	**5MB130005**	Round	130	35	60	Quick Change Studs	20mm QCS	60mm x 60mm	7.7 (3.5)	2.7 (1.2)	20	5QP020
5MB130006	-	Square	130	75	60	Quick Change Studs	20mm QCS	60mm x 60mm	21.6 (9.8)		20	5QP020
-	**5MB130007**	Square	130	130	60	Quick Change Studs	20mm QCS	60mm x 60mm	-	13.0 (5.9)	20	5QP020
5MB160002	**5MB160004**	Square	160	35	60	Quick Change Studs	20mm QCS	60mm x 60mm	15.2 (6.9)	5.2 (2.4)	20	5QP020
5MB160003	**5MB160005**	Round	160	35	60	Quick Change Studs	20mm QCS	60mm x 60mm	11.8 (5.4)	4.1 (1.8)	20	5QP020
5MB210002	**5MB210004**	Square	210	35	60	Quick Change Studs	20mm QCS	60mm x 60mm	26.3 (11.9)	9.1 (4.1)	20	5QP020
5MB210003	**5MB210005**	Round	210	35	60	Quick Change Studs	20mm QCS	60mm x 60mm	20.6 (9.3)	7.1 (3.2)	20	5QP020
5MB210006	**5MB210008**	Square	210	35	120	Quick Change Studs	20mm QCS	120mm x 120mm	26.3 (11.9)	9.1 (4.1)	20	5QP020
5MB210007	**5MB210009**	Round	210	35	120	Quick Change Studs	20mm QCS	120mm x 120mm	20.6 (9.3)	7.1 (3.2)	20	5QP020
5MB250002	**5MB250004**	Square	250	35	120	Quick Change Studs	20mm QCS	120mm x 120mm	37.4 (17.0)	12.9 (5.9)	20	5QP020
5MB250003	**5MB250005**	Round	250	35	120	Quick Change Studs	20mm QCS	120mm x 120mm	29.3 (13.3)	10.1 (4.6)	20	5QP020
5MB310002	**5MB310004**	Square	310	35	120	Quick Change Studs	20mm QCS	120mm x 120mm	57.7 (26.2)	19.9 (9.0)	20	5QP020
5MB310003	**5MB310005**	Round	310	35	120	Quick Change Studs	20mm QCS	120mm x 120mm	45.2 (20.5)	15.6 (7.1)	20	5QP020

5-Axis Drop & Lock™ Pallet Changer

Mount parts or fixtures quickly to a machine. Available in Round and Square styles. Drop a Fixture or Vise into the Pallet Changer using the Fixture Pro® pull stud system. With two quick turns of a hex wrench it's ready to machine. Drop it, Lock it, and go!

- Material: A2 Steel
- Hardness: 58-62 Rc
- Flatness: Ground .0002"/Ft.
- Thickness Tolerance: ±0.002
- Finish: Black Oxide

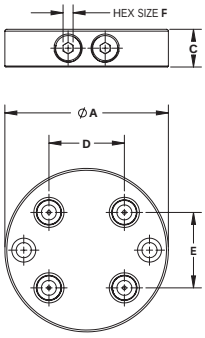

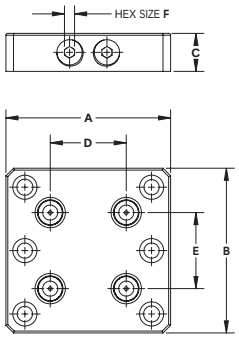

Pull Studs

Adapt any machinable part or fixture directly to the part. Use with our quick change Drop & Lock™ Pallet Changer.

- Material: A2 Steel
- Hardness: 50-54 Rc

Part Number	Style	Configuration of Pins	A (mm)	B (mm)	C (mm)	D (mm)	E (mm)	Hex Size F (mm)	Locating	Mounting Type	Weight lbs (Kgs)	Pull Stud Size (mm)	Pull Stud Part Number
5QP130002	Round	4	130	—	30	60	60	8	Center, Timing Pin, QLS	QLS, 12mm SHCS	5.8 /2.6	20	**5QP020**
5QP250002	Round	4	250	—	30	120	120	8	Center, Timing Pin, QLS	QLS, 12mm SHCS	23.9 /10.8	20	**5QP020**
5QP130001	Square	4	130	130	30	60	60	8	Center, Timing Pin, QLS	QLS, 12mm SHCS	7.2 / 3.3	20	**5QP020**
5QP250001	Square	4	250	250	30	120	120	8	Center, Timing Pin, QLS	QLS, 12mm SHCS	30.4 / 13.8	20	**5QP020**
5QP130003	Round	2	130	—	30	60	60	8	Center, Timing Pin, QLS	QLS, 12mm SHCS	6.0 / 2.7	20	**5QP020**
5QP130004	Square	2	130	130	30	60	60	8	Center, Timing Pin, QLS	QLS, 12mm SHCS	7.6 / 3.5	20	**5QP020**

Self Centering 60mm Vise

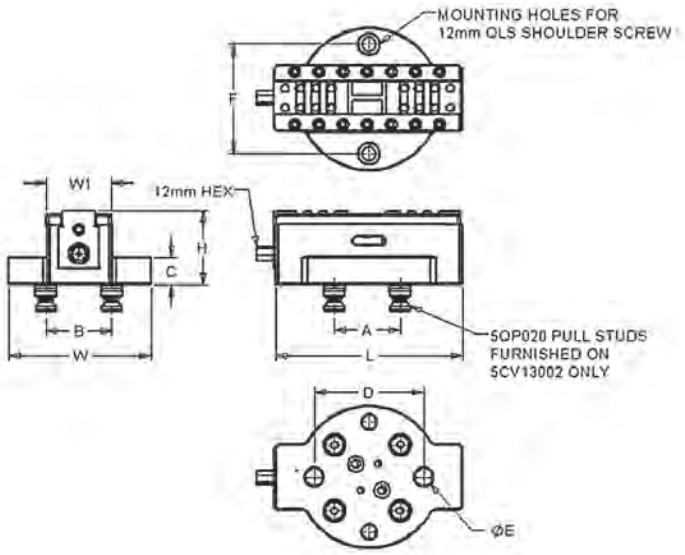

Part Number	Pull Studs	Size	Clamping Force (kN/Torque Nm)	Weight (Kg)	L (mm)	W (mm)	H (mm)	A (mm)	B (mm)	C (mm)	D (mm)	E (mm)	F (mm)
5CV13001	—	60mm	15/50	5.6	170	130	67.6	60	60	25	100	16	100
5CV13002	4 Included	60mm	15/50	5.6	170	130	67.6	60	60	25	100	16	100

5-Axis Top Tooling – 130mm Dovetail Vises

Light Duty

Heavy Duty

Mounts directly to a rotary table, Fixture Pro® Riser or any QLS Grid. Reduces distortion of parts. Requires 0.060" or less material to clamp.

Cutting a 10° angle cut in the bottom surface of a machinable part allows for extremely high clamping forces while leaving all 5 sides accessible. The heavy duty 130mm version has higher torque and tilting moments than the standard 130mm Fixture Pro® Dovetail Vise.

Dovetail cutter (part number 5DC3) available.

- Material: 1018 Steel
- Flat & Parallel within: .002"/Ft. (.05mm)
- Includes: Hardened Bushings
- Includes Center Locator Pin

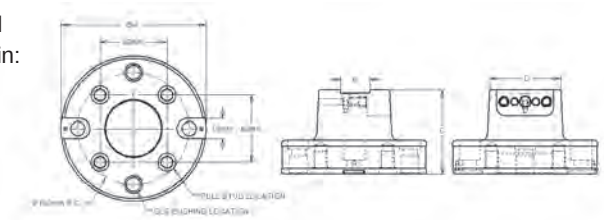

Part Number	Pull Studs	Description	A (mm)	B (mm)	C (mm)	D (mm)	Locating	Mounting Type	Mounting Grid	Weight lbs (Kgs)	Dovetail Cutter P/N
5DV130002	—	130mm L.D. Dovetail Vise, Steel	130	25	75	50	Center, Timing Pin, QLS	12mm SHCS	12mm X 50mm	7.36 (3.34)	5DC3
5DV130003	—	130mm H.D. Dovetail Vise, Steel	130	25	75	65	Center, Timing Pin, QLS	12mm SHCS	12mm X 50mm	7.21 (3.27)	5DC3
5DV130004	4 Included	130mm H.D. Dovetail Vise, Steel	130	25	75	65	Center, Timing Pin, QLS (& Quick Change Stud)	12mm SHCS (& 20mm QCS)	12mm X 50mm (60mm X 60mm)	6.2 (2.8)	5DC3

5-Axis Top Tooling – Block Dovetail Vises

Mounts directly to a rotary table, Fixture Pro® Riser or any QLS Grid. Reduces distortion of parts. Requires 0.060" or less material to clamp.

By cutting a 10° angle cut in the bottom surface of a machinable part it allows for extremely high clamping forces while leaving all 5 sides accessible.

Dovetail cutter (part number 5DC3) available.

- Material: 1018 Steel
- Flatness: .002"/Ft.
- Flat & Parallel within: .002"/Ft. (.05mm)
- Includes: Hardened Bushings

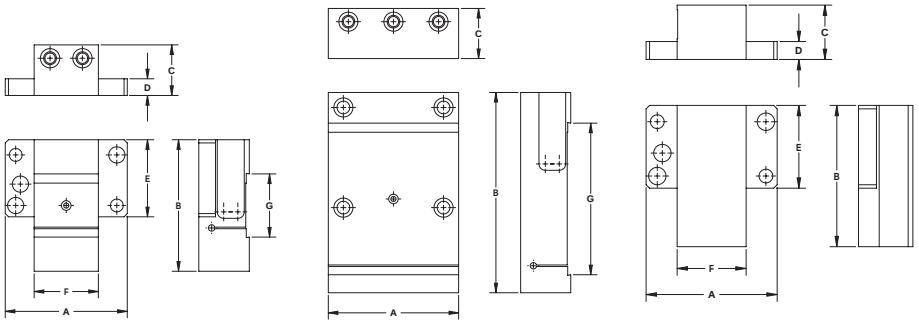

See additional 5-Axis top tooling on pages 122–133

Part Number	Description	A (mm)	B (mm)	C (mm)	D (mm)	E (mm)	F (mm)	G (mm)	Locating	Mounting Type	Mounting Grid	Weight lbs (Kgs)	Dovetail Cutter P/N
5DV200	Dovetail Pre-Cut Vise, Steel	120.7	130	50	16.5	76.2	63.5	62.5	Center, Timing Pin, QLS	12mm SHCS	12mm X 50mm	7.4 (3.3)	5DC3
5DV400	Dovetail Pre-Cut Vise, Steel	120.7	130	50	16.5	76.2	63.5	100.6	Center, Timing Pin, QLS	12mm SHCS	12mm X 50mm	7.2 (3.3)	5DC3
5DV600	Dovetail Pre-Cut Vise Steel	130	200	50	151.4	—	—	151.4	Center, Timing Pin, QLS	12mm SHCS	12mm X 50mm	19.7 (8.9)	5DC3
5MB250	Machinable Blank Steel	120.7	130	50	16.5	76.2	63.5	—	Center, Timing Pin, QLS	12mm SHCS	12mm X 50mm	8.0 (3.6)	5DC3

5-Axis ER Collet Fixtures

- Hardened alloy steel
- Excellent workholder for cylindrical parts
- Use with your existing ER Collets
- Direct interface with other Jergens Fixture-Pro® products
- Optional mounting styles available

ER130 Series

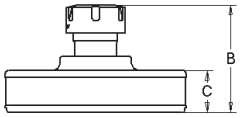

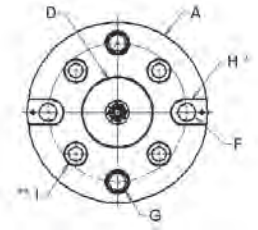

ER70 Series

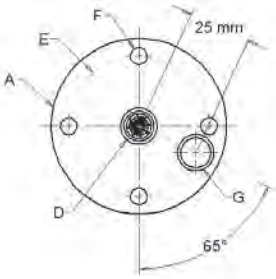

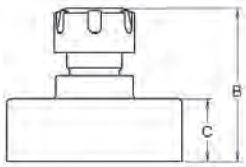

Part Number	Collet Size	A (mm)	B (mm)	C (mm)	D (mm)	E (mm)	F (mm)	G (mm)	H (mm)	I (mm)	Wt. lbs. (kg)	Tightening (ft/lbs) over/under 1/16" (2 mm) Collets ID
5ER07001	16	70	61.0	25	12	56	M6	12	N/A	N/A	1.9 (0.9)	42/30
5ER07002	20	70	61.9	25	12	56	M6	12	N/A	N/A	1.9 (0.9)	59/24
5ER07003	25	70	62.4	25	12	56	M6	12	N/A	N/A	2.1 (0.9)	77/77
5ER13001	25	130	77.0	30	50	100	M12	12	18	20	6.3 (2.9)	77/77
5ER13002	32	130	78.0	30	50	100	M12	12	18	20	6.7 (3.0)	100/100
5ER13003	40	130	80.0	30	50	100	M12	12	18	20	7.3 (3.3)	130/130

Please call 877-426-2504 for special order of Multi-Platform Fixture

5-Axis Locating Pins

Locates subplates to machine rotary tables, risers to subplates, and mounts Fixture Pro® Top Tooling directly to a rotary table.

- Material: 1018 Steel
- Tolerance: ±0.0002 (.005mm)

Center Locating Pins - Metric

Part Number	A (mm)	B (mm)	Thread	Weight lbs (Kgs)
5LP1220	12	20	M6	0.03 (.014)
5LP1225	12	25	M6	0.04 (.018)
5LP1230	12	30	M6	0.05 (.023)

Center Locating Pins - Inch

Part Number	A (mm)	B (mm)	Thread	Weight lbs (Kgs)	Extraction Tool
5LP50075	0.5	0.75	1/4-20	0.03 (.014)	5HW004
5LP500100	0.5	1	1/4-20	0.04 (.018)	5HW004
5LP500125	0.5	1.25	1/4-20	0.05 (.023)	5HW004

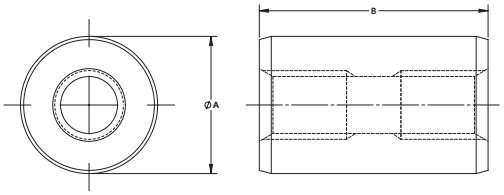

Center Locator Pins

Center Locator Pins, Long

Part Number	A (mm)	B (mm)	C Screw Size	Weight lbs (Kgs)
5LP5050	50	50	M12, 1/2 SHCS	1.49 (.68)
5LP5070	50	70	M12, 1/2 SHCS	2.11 (.96)
5LP5090	50	90	M12, 1/2 SHCS	2.73 (1.24)
5LP50110	50	110	M12, 1/2 SHCS	3.35 (1.52)

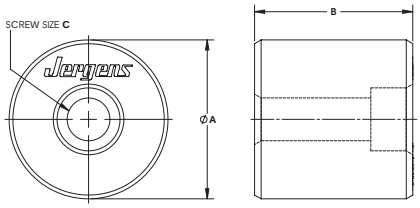

Center Locator Pins, Long

Diamond Timing Pins - Metric

Part Number	A (mm)	B (mm)	Thread	Weight lbs (Kgs)
5LP1220001	12	20	M6	0.03 (.014
5LP1225001	12	25	M6	0.04 (.018)
5LP1230001	12	30	M6	0.05 (.023)

Diamond Timing Pins - Inch

Part Number	A (mm)	B (mm)	Thread	Weight lbs (Kgs)	Extraction Tool
5LP50075001	0.5	0.75	1/4-20	0.03 (.014)	5HW004
5LP500100001	0.5	1	1/4-20	0.04 (.018)	5HW004
5LP500125001	0.5	1.25	1/4-20	0.05 (.023)	5HW004

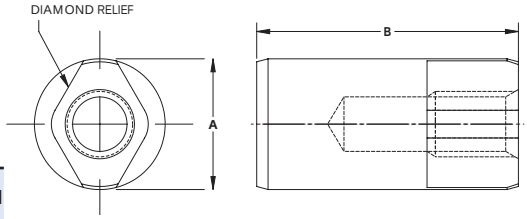

Diamond Timing Pins

Center Step Locator

Part Number	A (mm)	B (mm)	C in. (mm)	D (mm)	E Screw Size	Weight lbs (kg)
5LP1255020	50	20	1.25 (31.75)	40	M12, 1/2 SHCS	0.8 (.36)
5LP12512	1.25" (31.8 mm)	12	.472 (12)	27	N/A	0.2 (0.10)
5LP5050001	50	22	2.00 (50.8)	50	M12, 1/2 SHCS	1.5 (0.7)
5LP5050002	50	26	1.5 (38.1)	50	M12, 1/2 SHCS	1.2 (0.52)

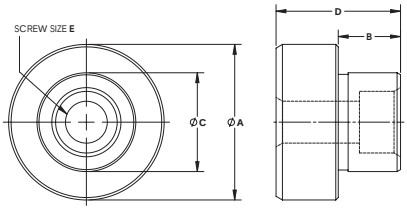

Center Step Locator

5-Axis Quick Locating System (QLS) Bushings

Part Number	A (mm)	B (mm)	C (mm)	Weight lbs (Kgs)
5BS1210	16	12	10	.01 (.005)
5BS1212	16	12	12	.02 (.009)
5BS1216	16	12	16	.02 (.009)
5BS1232	16	12	32	.05 (.023)

Part Number	A (in)	B (in)	C (in)	Weight lbs (Kgs)
5BS500375	0.75	0.5	0.375	.01 (.005)
5BS500500	0.75	0.5	0.5	.02 (.009)
5BS500625	0.75	0.5	0.625	.02 (.009)
5BS5001375	0.75	0.5	1.375	.05 (.023)

- Hardened and Ground
- Concentric within 0.0002" (0.005mm)

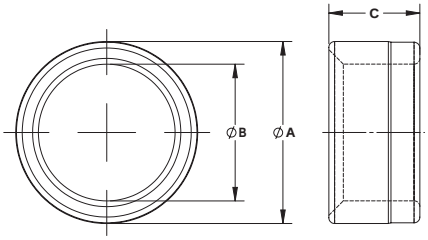

5-Axis Quick Locating System (QLS) Chip Plug*

* O-ring included.

Part Number	A (mm)	B (mm)	C (mm)	D (mm)	Thread Size (mm)	Weight lbs (Kgs)
5PL12002	12	7	14.5	11.8	M12 X 1.75	.02 (.01)
5PL23002	23	14	14.5	11.8	M12 X 1.75	.04 (.02)
5PL30002	30	16	14.5	11.8	M12 X 1.75	.05 (.023)

Part Number	A (in)	B (in)	C (in)	D (in)	Thread Size (in)	Weight lbs (Kgs)
5PL500001	0.5	0.3	0.57	0.50	1/2-13	.03 (.014)
5PL500002	1.0	0.6	0.57	0.50	1/2-13	.05 (.023)

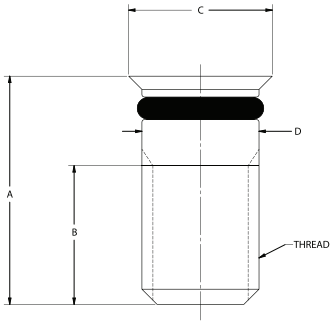

Aluminum Chip Plug

Part Number	C'Bore Hole Size (mm)	C (mm)	D (mm)	Weight (lbs/kgs)	Chip Plug Extractor Part Number
5PL12001	12	12.98	11.96	0.004 (0.002)	HW004
5PL15001	15	15.98	14.96	0.007 (0.003)	HW004
5PL16001	16	16.97	15.95	0.008 (0.004)	HW004
5PL17001	17	18.01	16.99	0.009 (0.004)	HW004
5PL18001	18	19.02	18.01	0.011 (0.005)	HW004
5PL19001	19	20.02	19	0.012 (0.005)	HW004
5PL20001	20	20.98	19.96	0.013 (0.006)	HW004
5PL25001	25	25.98	25.97	0.021 (0.010)	HW004

5-Axis Quick Locating System (QLS) Shoulder Screws

- Hardened and Ground
- "A" Diameter ±0.0003" (0.008mm)

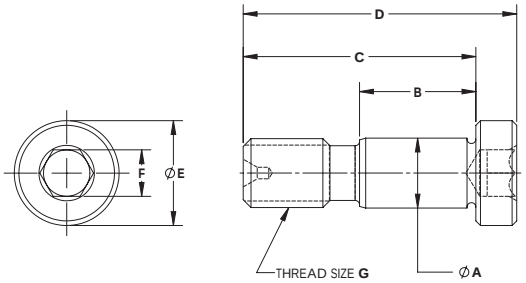

Part Number	A (mm)	B (mm)	C (mm)	D (mm)	E (mm)	Hex Size F (mm)	Thread Size G (mm)	Weight lbs (Kgs)
5SH1220	12	20	40	47	18	8	M12 X 1.75	.09 (.04)
5SH1225	12	25	45	52	18	8	M12 X 1.75	.1 (.045)
5SH1230	12	30	50	57	18	8	M12 X 1.75	.11 (.05)
5SH1235	12	35	55	62	18	8	M12 X 1.75	.12 (.054)
5SH1240	12	40	60	67	18	8	M12 X 1.75	.13 (.06)
5SH1245	12	45	65	72	18	8	M12 X 1.75	.14 (.064)
5SH1250	12	50	70	77	18	8	M12 X 1.75	.15 (.07)

Part Number	A (in)	B (in)	C (in)	D (in)	E (in)	Hex Size F (in)	Thread Size G (in)	Weight lbs (Kgs)
5SH50075	0.5	0.75	1.375	1.625	0.74	0.313	1/2-13	.09 (.04)
5SH500100	0.5	1	1.625	1.875	0.74	0.313	1/2-13	.1 (.045)
5SH500125	0.5	1.25	1.875	2.125	0.74	0.313	1/2-13	.11 (.05)
5SH500150	0.5	1.5	2.125	2.375	0.74	0.313	1/2-13	.13 (.06)
5SH500175	0.5	1.75	2.375	2.625	0.74	0.313	1/2-13	.14 (.064)
5SH500200	0.5	2	2.625	2.875	0.74	0.313	1/2-13	.15 (.07)

5-Axis Locating Keys

Part Number	Mounts to Riser Size (mm)	A in (mm)	B in (mm)	C (mm)	Weight lbs (kgs)
5LK1301812	130	.472 (12)	.709 (18)	25.26	.02 (.009)
5LK1301814	130	.551 (14)	.709 (18)	25.26	.02 (.009)
5LK1301816	130	.630 (16)	.709 (18)	25.26	.02 (.009)
5LK1301818	130	.709 (18)	.709 (18)	25.26	.03 (.014)
5LK13018500	130	.500 (12.7)	.709 (18)	25.26	.02 (.009)
5LK13018562	130	.562 (14.3)	.709 (18)	25.26	.02 (.009)
5LK13018625	130	.625 (15.9)	.709 (18)	25.26	.02 (.009)
5LK13018687	130	.687 (17.4)	.709 (18)	25.26	.03 (.014)
5LK2501812	250	.472 (12)	.709 (18)	48	.04 (.018)
5LK2501814	250	.551 (14)	.709 (18)	48	.05 (.023)
5LK2501816	250	.630 (16)	.709 (18)	48	.05 (.023)
5LK2501818	250	.709 (18)	.709 (18)	48	.06 (.027)
5LK25018500	250	.500 (12.7)	.709 (18)	48	.05 (.023)
5LK25018562	250	.562 (14.3)	.709 (18)	48	.05 (.023)
5LK25018625	250	.625 (15.9)	.709 (18)	48	.05 (.023)
5LK25018687	250	.687 (17.4)	.709 (18)	48	.06 (.027)

Used to adapt any of the Fixture Pro® elements with bottom keyway slots for alignment to your machine table slots. Unique design accommodates socket head cap screws, which will tighten a T-nut to the T-slot in your machine.

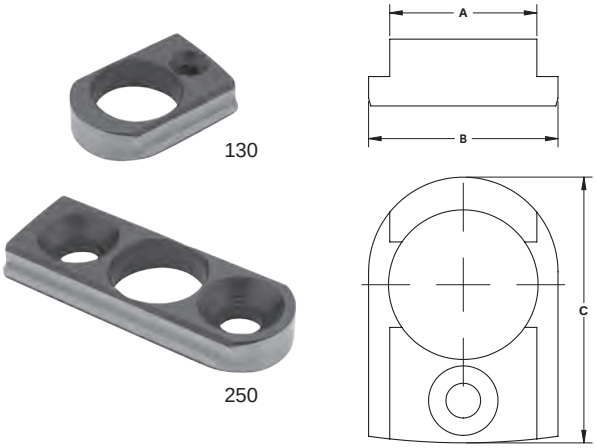

- Case Hardened: 60 Rc
- Thickness Tolerance: +0, -.0005
- Finish: Black Oxide

Fixture Pro® components allow you to mount directly to a T-slot with our special through-hole machine keys, QLS bushings, and QLS shoulder screws. All hardware mounting methods can quickly be converted over and mounted to a different machine tool the next time you use the components.

PRODUCTION VISES

Vises

Introduction to Design 74–75
VMC/HMC Solutions 76–77
Ball Lock® Mounting System 78–79
Production Vises
4" (100 mm) Production Vises 80–81
6" (150 mm) Production Vises 82–83
Self Centering Vises 84
4" (100 mm) 84–85
6" (150 mm) 86–87
Accessories 87
Production Vise Columns
4" (100 mm) Production Vise
4 Sided 88
3 Sided 89
6" (150 mm) Production Vise
4 Sided 90
3 Sided 91
12 Station Hex 92
12 & 16 Station Multi Quads 93–94
Hydraulic Production Vises 95
4" (100 mm) 96–97
6" (150 mm) 97–98
Hydraulic Vise Columns 99
4" (100 mm) 4 sided 100
4" (100 mm) 3 sided 101
6" (150 mm) 4 sided 102
6" (150 mm) 3 sided 103
Column Subplates 104
Hydraulic Vise Accessories 105–106
Vise Accessories 107–112
Jaw Selections 107–109
Ball Lock® Shanks/Plates 110–111
Sine Fixture Keys/T-Slot Nuts 112
Heavy Duty Machine Vise 113

Bock Quick Change Fixturing

Introduction 114
System Overview 115–116
Twin Vises 117
Jaw System 118
Twin Vise Data 119
Locator Plates 120
DexLoc™ Locator Pins 120
Mono-Quad System 121

5-Axis Production Vises

Introduction 122
Self Centering 123
Jaws /Accessories 124–125
Fixed 126
Jaws/Accessories 127
Quick Clamping Block 128
Super Compact Clamp 129
Jaws/Accessories 130–131
Vise with Reversible and Interchangeable Inserts 132
Jaws/Accessories 132
Pallet Clamps 133

Jergens®
MANUFACTURING EFFICIENCY

Jergens Production Vise System

Self-Centering Vises

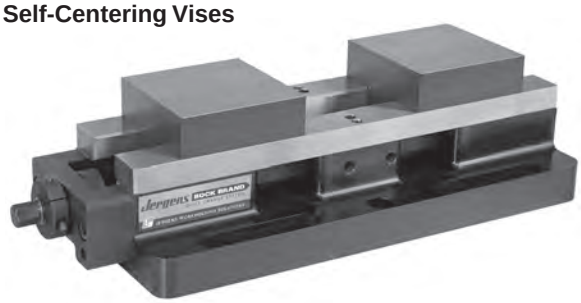

• Quick, simple fixturing for concentric machining

Dual Station Vises

Maximum Holding Power

• Jaws machined to the contour of your workpiece maximizing holding force.

Production Vise Columns

2, 4, 6, 8, 12 and 16 station models available.

6" (150mm) MonoQuad

4" (100mm) MonoQuad

• Quick change reverseable soft jaws
• Single station adapter plate included
• Multiple base designs to meet any requirement

Fastest Quick Change Jaw System

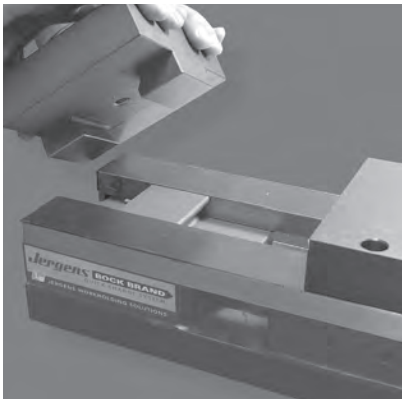

Jergens Production Vises
Features and Benefits:

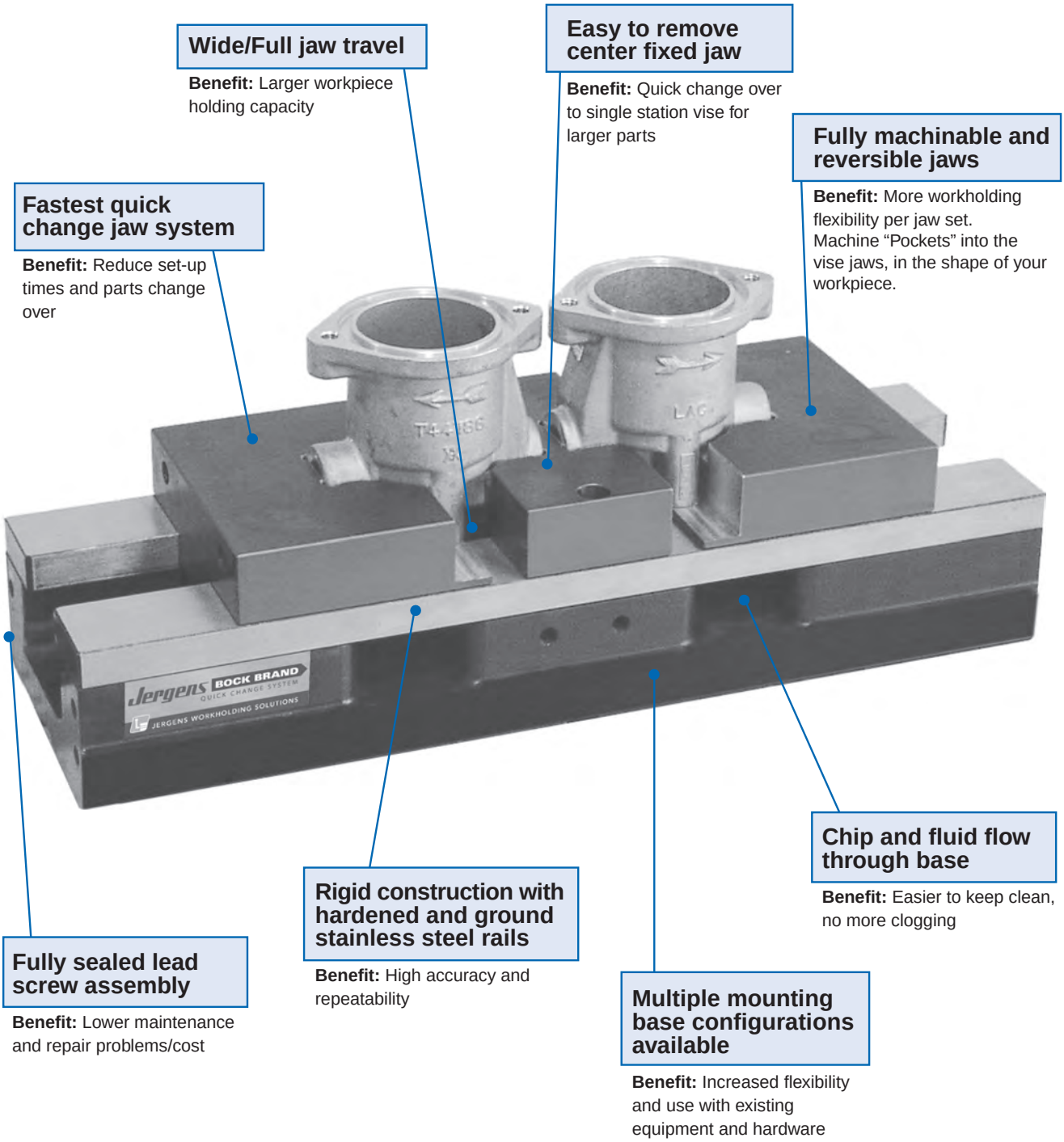

Wide/Full jaw travel

Benefit: Larger workpiece holding capacity

Easy to remove center fixed jaw

Benefit: Quick change over to single station vise for larger parts

Fully machinable and reversible jaws

Benefit: More workholding flexibility per jaw set. Machine "Pockets" into the vise jaws, in the shape of your workpiece.

Fastest quick change jaw system

Benefit: Reduce set-up times and parts change over

Chip and fluid flow through base

Benefit: Easier to keep clean, no more clogging

Rigid construction with hardened and ground stainless steel rails

Benefit: High accuracy and repeatability

Fully sealed lead screw assembly

Benefit: Lower maintenance and repair problems/cost

Multiple mounting base configurations available

Benefit: Increased flexibility and use with existing equipment and hardware

Jergens
WORKHOLDING SOLUTIONS GROUP

Vertical Machine Solutions

Narrow Base Production Vises
Pages 81 & 83

The small footprint allows maximum density of vises on your fixture or table. Best choice for applications where parts are held in multiple vises.

Ball Lock® Base Production Vises
Pages 80 & 82

The mounting flange is cut into a jigsaw pattern to allow vises to nest closely together. Designed for use with Jergens Ball Lock® Mounting System.

Universal Base Production Vises
Pages 81 & 83

The mounting flange has slotted holes to allow mounting on any machine table.

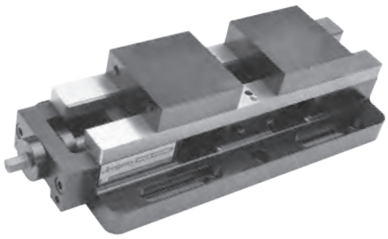

Self Centering Vises (3 Base Styles)
Pages 84–87

Self-Centering vises provide quick, simple fixturing for concentric machining of different sized workpieces.

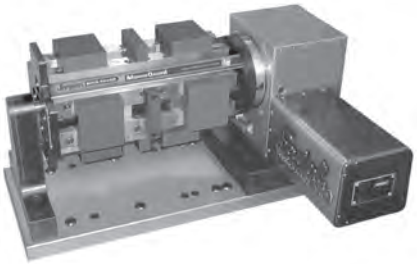

Indexer Systems
Page 89

Indexer solutions can be customized to your requirements. Choose either three or four sided columns.

Hydraulic Vise
Pages 96–98

Innovative compact design. Reduced set-up time. Internal Slide Assembly with Hydraulic Clamping Cylinder.

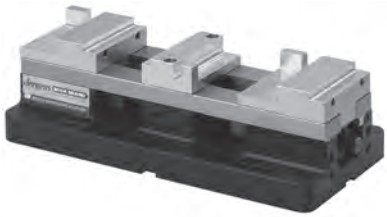

Bock Brand Quick Change System
Pages 114–121

Bock Brand vises combine with alpha-numeric locator plates and Dex-Loc™ pins for maximum quick change efficiency.

5-Axis Production Vises
Pages 122–133

5-Axis production vises and accessories rigidly clamp parts without obstructing access to multiple part faces.

Horizontal Machine Solutions

3-Sided Production Vise Columns
Pages 89 & 91

For machining 3 faces of production parts on HMC's. Large spindle noses can access the workpiece. **Allows for up to 240° workpiece accessibility.**

4-Sided Production Vise Columns
Pages 88 & 90

Available with bases to fit directly onto machine table pallets or to a Ball Lock® sub-plate.

6-Sided Production Vise Columns
Page 92

Increase the number of parts per load, while maintaining a small footprint. Available with bases to fit directly onto machine tables or to a Ball Lock® sub-plate.

4-Sided Production Vise Multi-Columns
Pages 93 & 94

Multiple columns mounted on a single base provide 12 or 16 workstations. Available with bases to fit directly onto your machine table or to a Ball Lock® sub-plate.

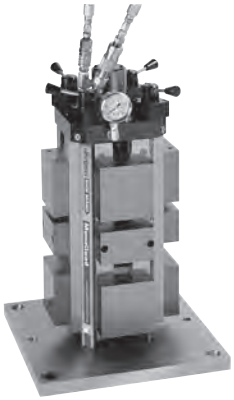

Hydraulic Vise Columns
Pages 99–105

Innovative compact design. Reduced set-up times, faster workpiece change overs.

Multi-Vise Fixtures
Pages 81, 83, 85, 87 & 97

To maximize productivity, mount multiple narrow body vises onto a single fixture plate. Mount the fixture plate onto the tombstones with the Jergens Ball Lock® Mounting System.

Ball Lock® Fixture Mounting System for Jergens Production Vises

Locates

The Ball Lock® System accurately positions your fixture plate...to within ±0.0005" (±0.013mm) repeatability or better, minimizing the need to indicate your fixture.

Locks

The Ball Lock® System securely holds fixture plates to subplates with up to 20,000 lbs (88kN) of hold-down force per shank.

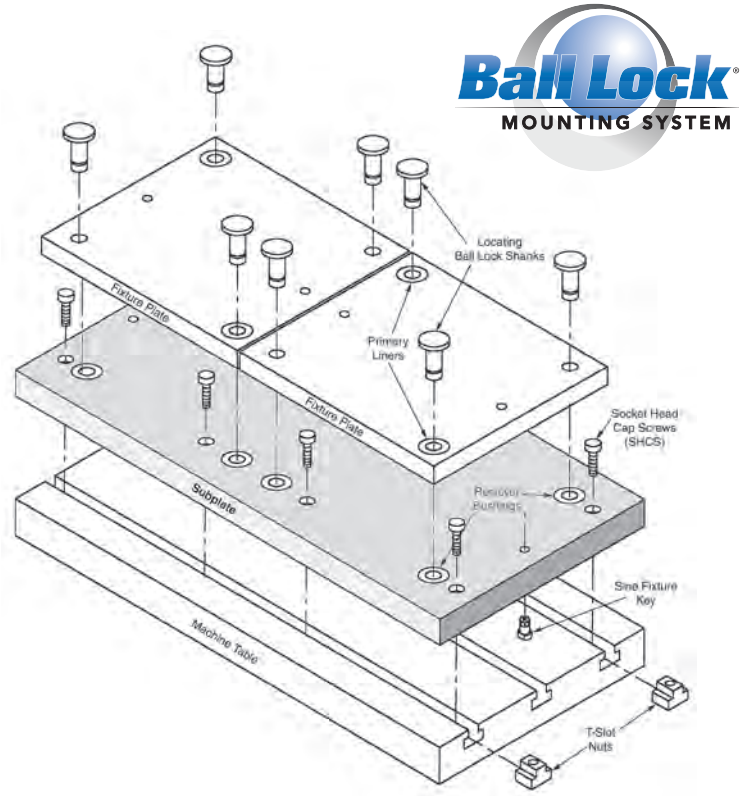

The Ball Lock® Mounting System provides a method of quickly and accurately locating fixtures onto machine tables. The Ball Lock® Mounting System has done for machining centers what the Japanese SMED (Single Minute Exchange of Die) concept did for presses. Instead of SMED, Ball Lock® provides single minute exchange of fixtures. Fixtures can often be exchanged in less than a minute with position repeatability of ±0.0005" (±0.013mm). Fixtures can be exchanged between different machines when both are using the Jergens Ball Lock® Mounting System.

Commonly Asked Questions

Q. What is the Ball Lock® Mounting System?
A. It is a means of locating and locking two flat surfaces together, normally a fixture plate to a sub-plate.

Q. How does it locate?
A. Similar to locating pins, two Ball Lock® shanks (pins) pass through two precision liner bushings on the fixture plate and into two precision receiver bushings on the subplate.

Q. How does it lock?
A. Inside the shank are three balls that expand into a tapered groove in the receiver bushing. This action draws the plates together. The locking balls are activated by turning a setscrew in the head of the shank, which pushes a 4th ball to distribute the clamping forces between the 3 locking balls.

Q. How many shanks are required to locate and lock each fixture?
A. Only two shanks, passing through bushings in the fixture plates, are required for location. However, additional shanks passing through clearance holes in the fixture plate will provide additional holding force distributed across the plate.

Unmatched Setup Speed and Workholding Flexibility

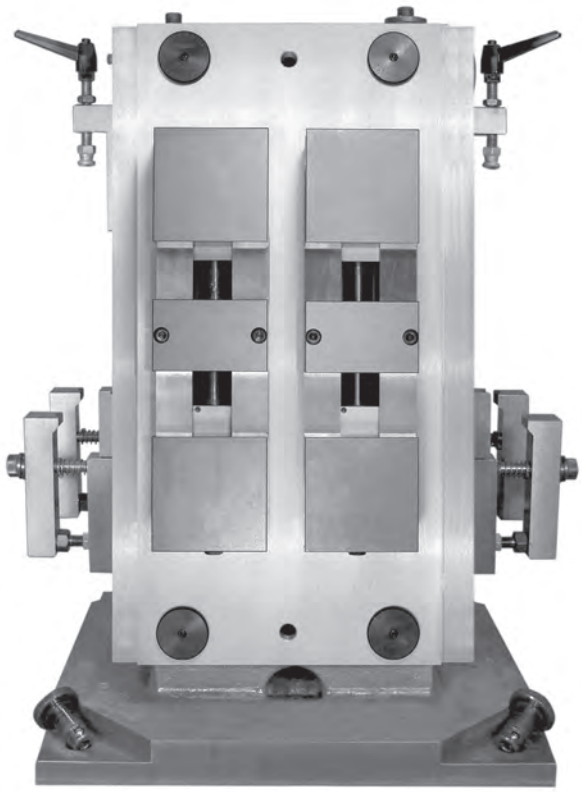

Q. Is there a preferable location for the liner bushing?
A. System repeatability is improved if the liners are located at opposite corners of a rectangular fixture plate. For consistency, we recommend locating the liner bushings at top left and bottom right.

Q. What are the advantages of using the Ball Lock® System over the conventional method of dowel pins and cap screws?
A. Both locating and locking are accomplished in the same motion. Ball Lock® shanks require only 2.5 turns to lock a 1/2–13 (M12) screw with ¾" (18mm) of thread engagement requires 10 turns to lock. On CNC machines, the repeatability of fixture locations makes indicating of the fixture unnecessary.

Q. How do I recess the fixtureplate for a clear surface ?
A. Counterbore the fixture plate to a diameter large enough to allow easy removal of the shank.

Note: The thickness of the plate section under the head of the shank is critical and must conform to mounting instructions .

Q. What if my plate is thinner than the recommended thickness?
A. By adjusting the depth of the counterbore for the receiver bushing in the subplate, you can still use the Ball Lock® System. If there are any questions on this type of application, please call 1-877-426-2504.

Q. Can I use the shanks in a heated environment?
A. The shank is made of alloy steel, heat treated to 40-45Rc and should with stand temperatures up to 400°F. (200°C).

Note: Thermal expansion of fixture plates may affect the center distance tolerance and repeatability.

Jergens
WORKHOLDING SOLUTIONS GROUP

Production Vises – 4" (100mm)

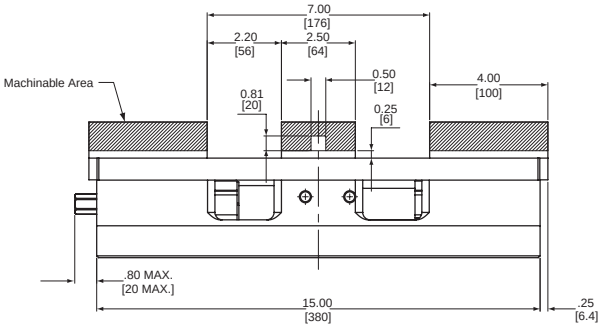

Vise With Machinable Soft Jaws

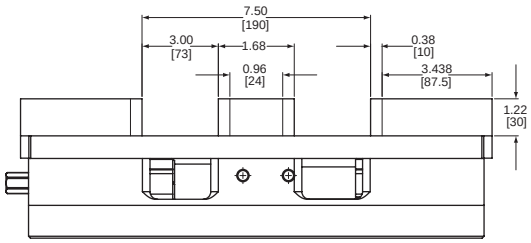

Vise With Hard Jaw Carrier Set and hardened steel inserts

Features and Benefits:

- Compact design in 3 extruded aluminum base styles for easy setup and to reduce weight on worktable.
- Fully sealed, patented lead screw assembly for long maintenance free service. Openings allow chips to flow out of the vise base.
- Hardened stainless steel rails, ground within ±0.001" (0.025mm) provide precise location, resist wear and provide strong support to jaws.
- Supplied with aluminum soft jaws, fully machineable and reversible. Additional jaws can be ordered separately, see page 108. Alternate jaw types can be ordered with the vise base by adding the following suffix to the part numbers:
  - **-H** for Jaw Carrier Set with Hardened Steel Inserts
  - **-S** for machineable Steel Jaws
  - **-T** for extra Tall aluminum jaws sets
  - **-W** for extra Wide aluminum jaw sets

Maximum Clamping Range With Shaped Jaws

Dual Station: 6.75" (170mm)
Single Station: 14.40" (365mm)

Clamping Force

Jergens 4" (100mm)

Torque		Clamping Force	
ft. lbs	N•m	lbs	kgf
20	27	3,600	1,630
30	41	4,500	2,040
40	54	5,300	2,400
50	68	6,200	2,800
60	81	7,200*	3,250*

*Recommended Maximum

Ball Lock® Base

The **Ball Lock® Base Vise** is for use with the Jergens Ball Lock® Quick Change Mounting System. The base has a "jig saw" pattern to allow the vises to be mounted close to each other. For more information about Ball Lock®, see pages 78–79.

Inch

Part No.	Wt.	Ball Lock® Shank Part No.	Shank Size
49405	31 lbs	**49601**	20mm x 3/4"

Metric

Part No.	Wt.	Ball Lock® Shank Part No.	Shank Size
69405	14 Kg	**49651**	20mm x 20mm

Mounting Dimensions

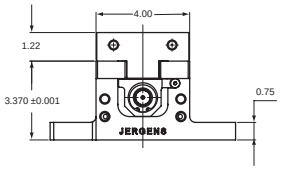

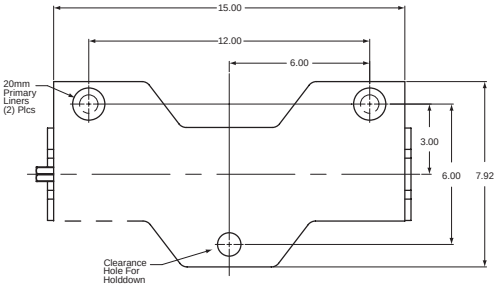

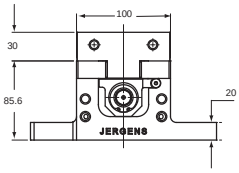

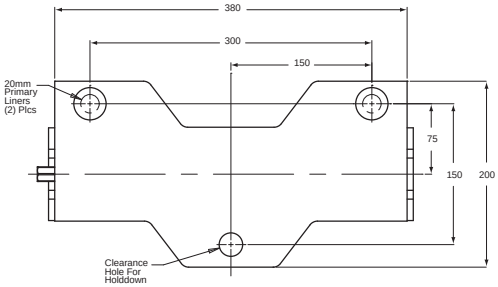

Production Vises – 4" (100mm)

Narrow Base

Part Number	Wt. lbs/Kg
49401	30/14

The **Narrow Base Vise** can be mounted as a stand-alone vise with traditional strap clamps. The narrow base has 2 locating holes for 12mm dowel pins and 2 locating holes for sine fixture keys to align vise in T-slots. Keys for inch and metric T-slots shown on page 112. Recessed mounting holes (3) are also provided for top mounting to fixture plates with socket head cap screws. Tapped mounting holes (6) are provided for bottom mounting. The slim design allows a high density of vises on machine tables, tombstones, or columns. Maximize flexibility by utilizing the Jergens Ball Lock® Quick Change Mounting System. See page 78.

• Easy to mount to Ball Lock® or other fixture plates

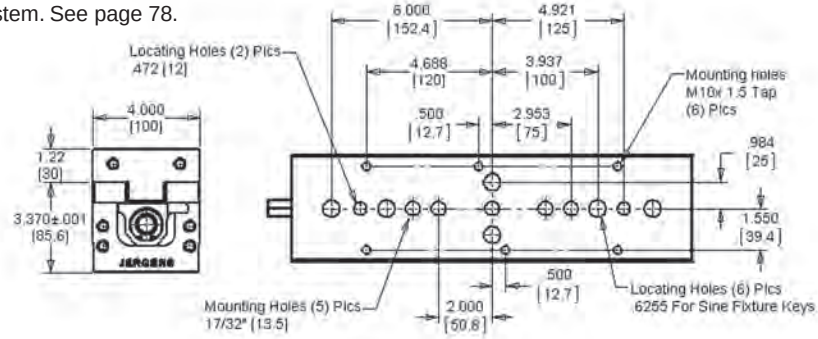

Mounting Dimensions

Universal Base

Part Number	Wt. lbs/Kg
49471	31/14

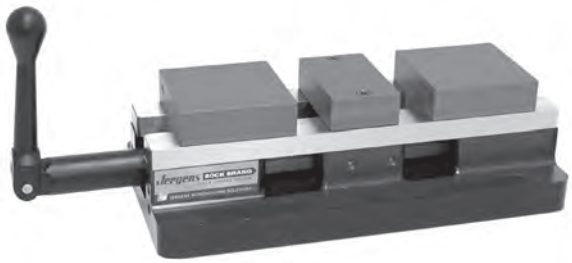

The **Universal Base Vise** is easily mounted directly to machine tool tables. Slotted mounting holes will match almost any table slot pattern. Location holes are provided for Jergens Sine Fixture Keys, to provide easy and accurate alignment with table slots.

• Easy to mount directly to machine tables

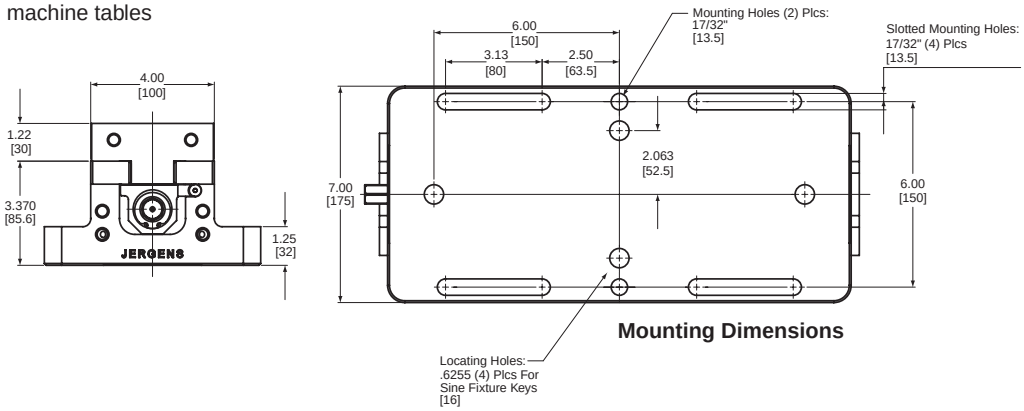

Mounting Dimensions

Jergens
WORKHOLDING SOLUTIONS GROUP

Production Vises – 6" (150mm)

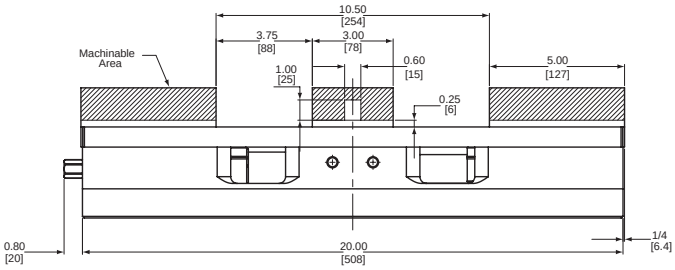

Vise With Machinable Soft Jaws

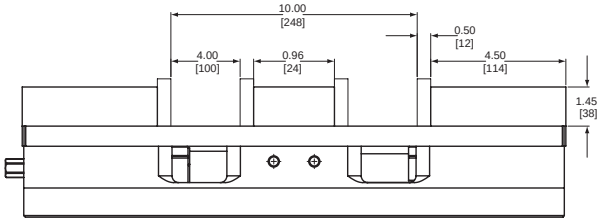

Vise With Hard Jaws Carrier Set and hardened steel inserts

Features and Benefits:

- Compact design in 3 extruded aluminum base styles for easy setup and to reduce weight on worktable.
- Fully sealed, patented lead screw assembly for long maintenance free service. Openings allow chips to flow out of the vise base.
- Hardened stainless steel rails, ground within ±0.001" (0.025mm) provide precise location, resist wear and provide strong support to jaws.
- Supplied with aluminum soft jaws, fully machineable and reversible. Additional jaws can be ordered separately, see page 108. Alternate jaw types can be ordered with the vise base by adding the following suffix to the part numbers:
  - **-H** for Jaw Carrier Set with Hardened Steel Inserts
  - **-S** for machineable Steel Jaws
  - **-T** for extra Tall aluminum jaws sets
  - **-W** for extra Wide aluminum jaw sets

Clamping Force
Jergens 6" (150mm)

Torque		Clamping Force	
ft. lbs	N•m	lbs	kgf
20	27	3,600	1,630
30	41	4,500	2,040
40	54	5,300	2,400
50	68	6,200	2,800
60	81	7,200	3,250
70	95	8,400	3,800
80	108	9,200	4,150
90	122	10,100*	4,550*

*Recommended Maximum

Maximum Clamping Range With Shaped Jaws
Dual Station: 9.2" (233mm)
Single Station: 19.5" (495mm)

Ball Lock® Base

The **Ball Lock® Base Vise** is for use with the Jergens Ball Lock® Quick Change Mounting System. The base has a "jigsaw" pattern to allow the vises to be mounted close to each other. For more information about Ball Lock®, see pages 78–79.

Inch

Part No.	Wt.	Ball Lock® Shank Part No.	Shank Size
49406	68 lbs	**49601**	20mm x 3/4"

Metric

Part No.	Wt.	Ball Lock® Shank Part No.	Shank Size
69406	31 Kg	**49651**	20mm x 20mm

Mounting Dimensions

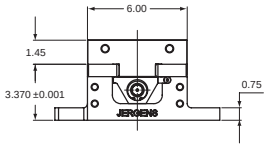

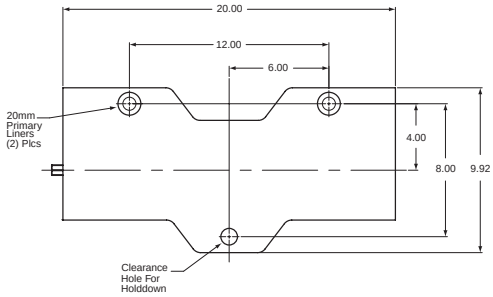

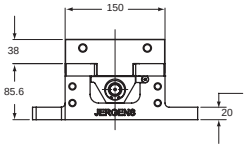

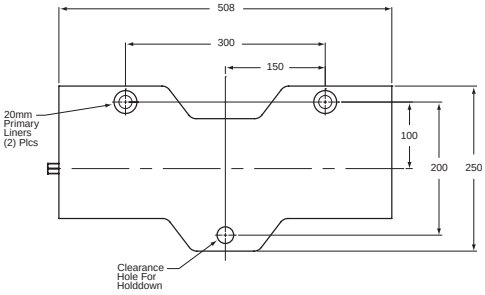

Production Vises – 6" (150mm)

Narrow Base

Part Number	Wt. lbs/Kg
49402	66/30

The **Narrow Base Vise** can be mounted as a stand-alone vise or mounted to a fixture plate. The slim design allows a high density of vises on machine tables, tombstones, or columns. Maximize flexibility by utilizing the Jergens Ball Lock® Quick Change Mounting System. See pages 78–79.

- Easy to mount to Ball Lock® or other fixture plates

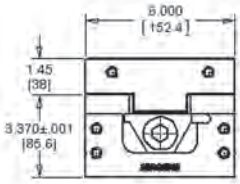

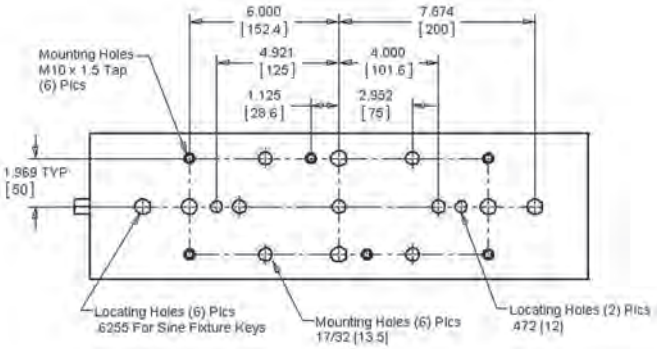

Mounting Dimensions

Universal Base

Part Number	Wt. lbs/Kg
49472	68/31

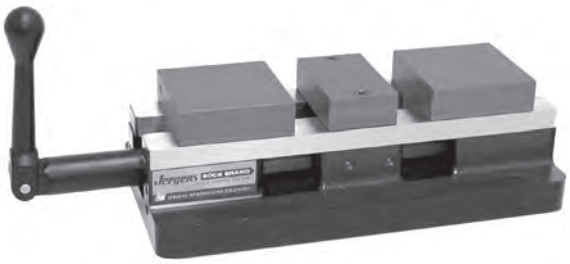

The **Universal Base Vise** is easily mounted directly to machine tool tables. Slotted mounting holes will match almost any table slot pattern. Location holes are provided for Jergens Sine Fixture Keys, to provide easy and accurate alignment with table slots.

- Easy to mount directly to machine tables

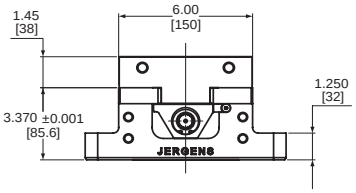

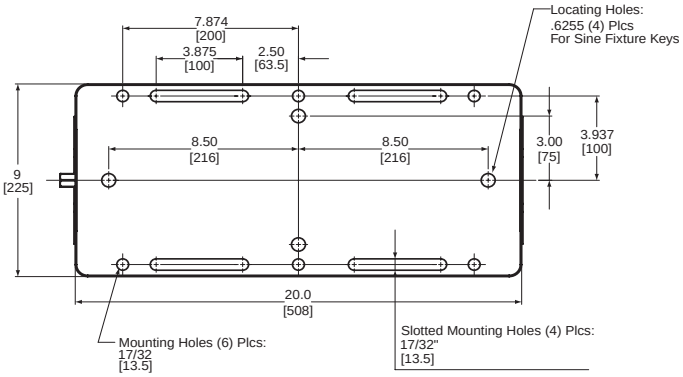

Mounting Dimensions

Jergens
WORKHOLDING SOLUTIONS GROUP

Self-Centering Precision Production Vises

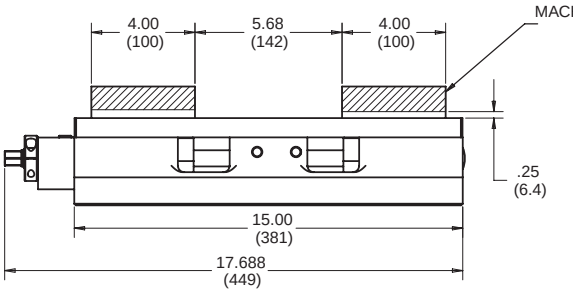

4" (100mm) Self-Centering Vises

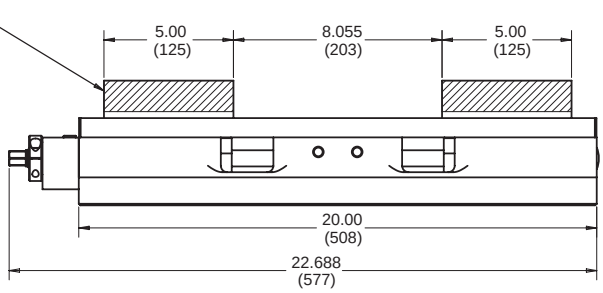

6" (150mm) Self-Centering Vises

Features and Benefits:

- Self-Centering vises provide quick, simple fixturing for concentric machining of different sized workpieces.
- Adjustable gib design increases accurracy.
- Compact design in 3 extruded aluminum base styles for easy setup and to reduce weight on worktable.
- Fully sealed, patented lead screw assembly for long maintenance free service. Openings allow chips to flow out of the vise base.
- Hardened stainless steel rails, ground within ±0.001" (0.025mm) provide precise location, resist wear and provide strong support to jaws.
- Supplied with aluminum soft jaws, fully machineable and reversible. Additional jaws can be ordered separately, see page 108. Alternate jaw types can be ordered with the vise base by adding the following suffix to the part numbers:

-H for Jaw Carrier Set with Hardened Steel Inserts
-S for machineable Steel Jaws
-T for extra Tall aluminum jaws sets
-W for extra Wide aluminum jaw sets

Technical Specifications:

Maximum jaw opening (Unmachined jaws)
4" (100mm) model: 5.6" (142mm)
6" (150mm) model: 8" (200mm)
Repeatability: 0.0002" (0.005mm)
Maximum Clamping Force: 4600lbs (2000kgf)
Centering accuracy per 1 inch (25mm) of jaw travel: 0.0002" (0.005mm)

Maximum Clamping Range

With Shaped Jaws
4" Vise: 13" (330mm)
6" Vise: 17.5" (440mm)

Clamping Force

Jergens 4" (100mm) & 6" (150mm) Self-Centering Vises

Torque		Clamping Force	
ft. lbs	N•m	lbs	kgf
20	27	1100	500
30	41	1500	680
40	54	2200	1000
50	68	2700	1220
60	81	3100	1400
70	95	3800	1720
80	108	4200*	1900*

*Recommended Maximum

Self-Centering Vises – 4" (100mm)

Universal Base

- Easy to mount directly to machine tables
- Slotted mounting holes fit most machinable centers

Part Number	Wt. (lbs)
49471SC	38

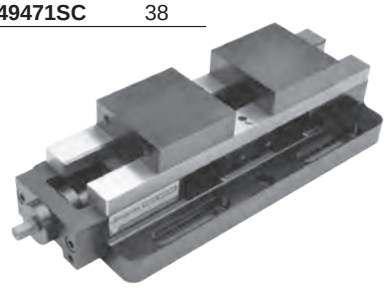

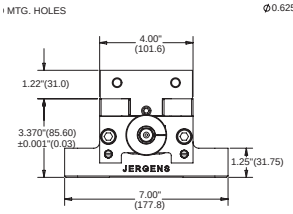

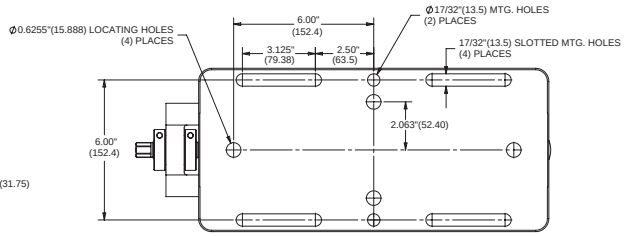

- **Shown in Universal Base, also available in Narrow Bases and Ball Lock® Mounting Base.**

Self-Centering Vises – 4" (100mm)

Ball Lock®

- Integrates with the Jergens Ball Lock® mounting system
- Jigsaw pattern allows for "nesting" on Jergens Ball Lock® subplates

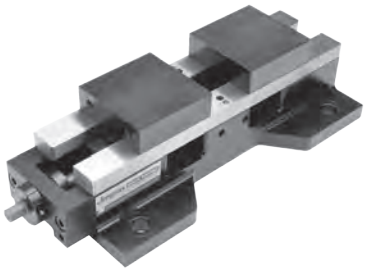

Inch

Part Number	Wt. lbs
49405SC	36

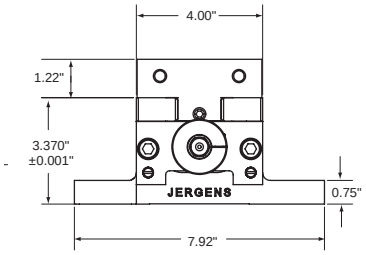

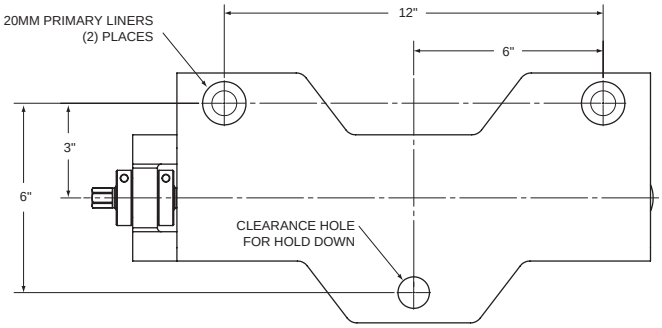

Metric

Part Number	Wt. Kg
69405SC	17

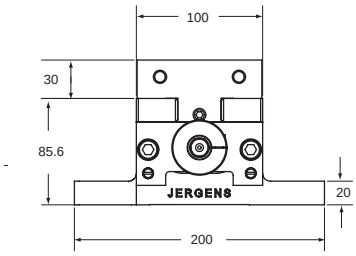

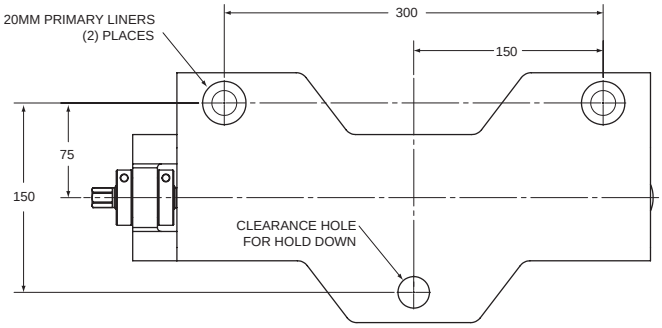

Narrow Base

- Designed for stand alone or fixture plate mounting
- Slim design enables high density mounting

Part Number	Wt. (lbs)
49401SC	34

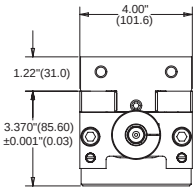

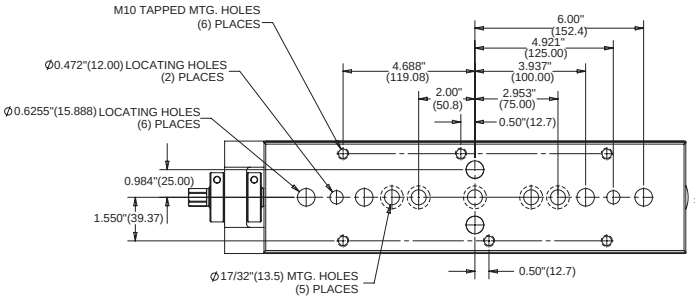

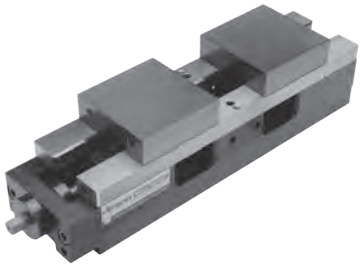

Jergens
WORKHOLDING SOLUTIONS GROUP

Self-Centering Vises – 6" (150mm)

Universal Base

- Easy to mount directly to machine tables
- Slotted mounting holes fit most machinable centers

Part Number	Wt. (lbs)
49472SC	70

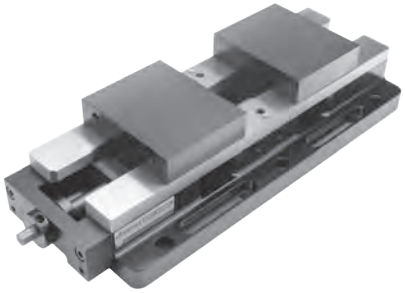

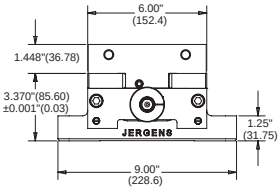

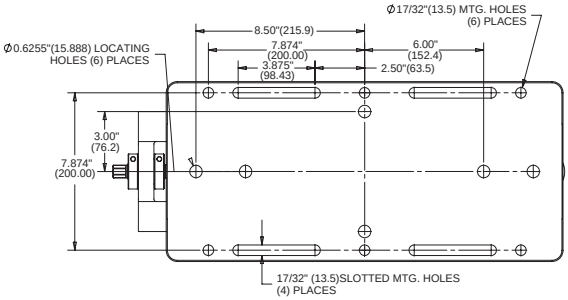

Ball Lock® Base

- Integrates with the Jergens Ball Lock® mounting system
- Jigsaw pattern allows for "nesting" on Jergens Ball Lock® subplates

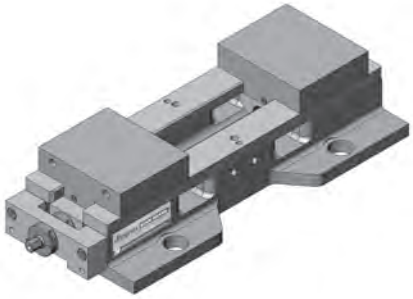

Inch

Part No.	Wt. lbs
49406SC	66

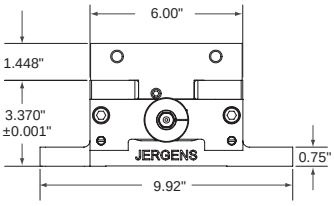

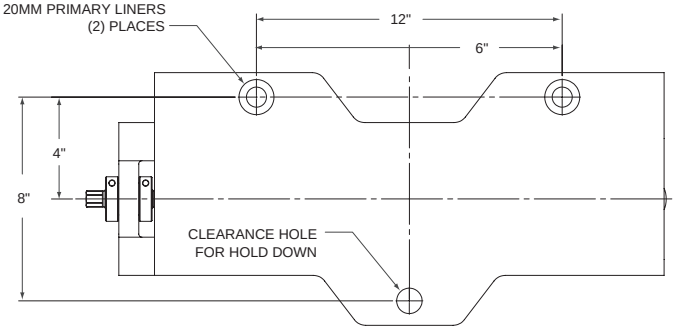

Metric

Part No.	Wt. Kg
69406SC	30

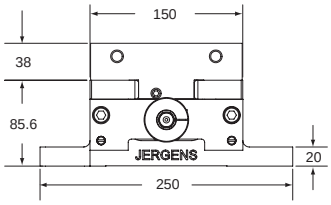

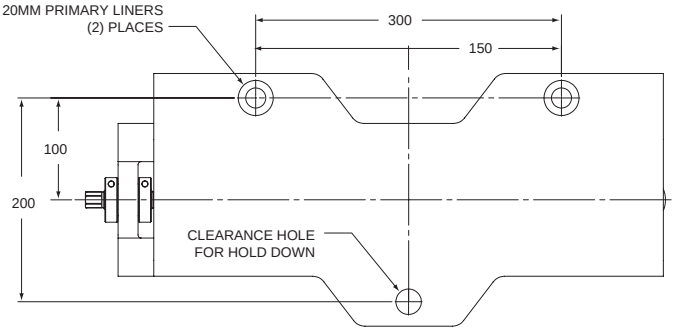

Self-Centering Vises – 6" (150mm)

Narrow Base

Part Number	Wt. (lbs)
49402SC	64

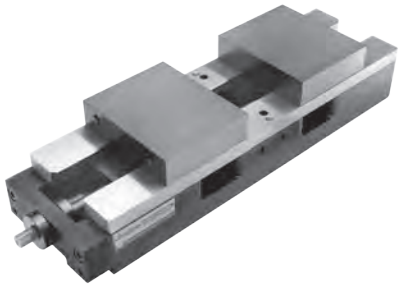

- Designed for stand alone or fixture plate mounting
- Slim design enables high density mounting

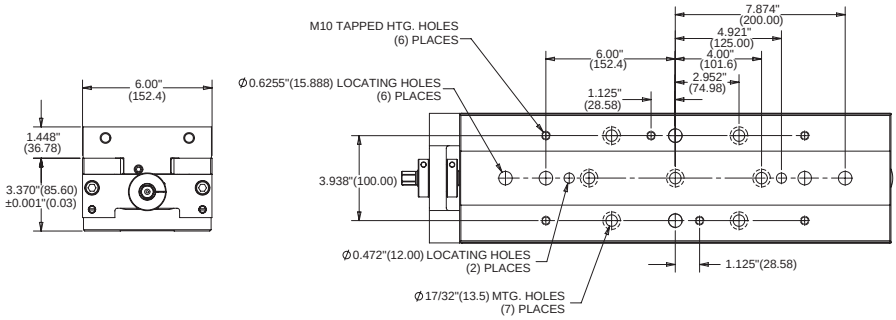

Self Centering Vise Accessories

Jaws with Adjustable Gib Screw*

• Better location accuracy than conventional Jergens Quick Change Vise Jaws

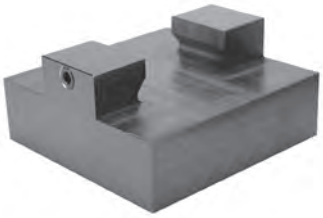

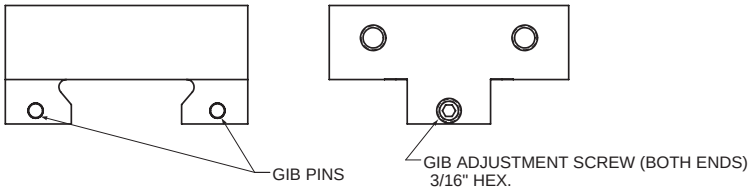

*Jergens Standard Jaws fully compatible, see complete selection on page 108.
To order Jergens Production Vise Jaws with Adjustable Gib Screw, use standard jaw part no. followed by "SC".

Handle

Self-Centering Vise Handle
One Piece Included with 4" (100mm) & 6" (150mm) Self-Centering Vises

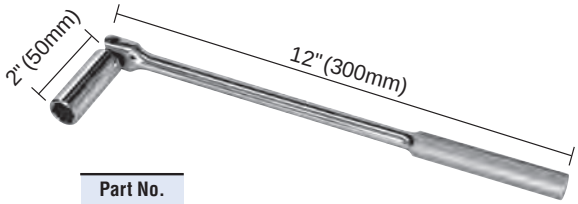

Part No.
49442SC

- Ergonomic hinge handle.
- Specification: Chrome Plated Steel, 9/16 Hex Socket

Production Vise Columns – 4" (100mm)

- 3 or 4-Sided Columns
- Multiple mounting systems
- Fastest quick-change jaw system
- Full jaw travel
- Hardened stainless steel rails support jaws and resist wear
- Fully sealed lead screw assembly
- Supplied with machinable soft jaws
- Available with hard jaws

Clamping Force

Jergens 4" (100mm)

Torque		Clamping Force	
ft. lbs	N•m	lbs	kgf
20	27	3,600	1,630
30	41	4,500	2,040
40	54	5,300	2,400
50	68	6,200	2,800
60	81	7,200*	3,250*

*Recommended Maximum

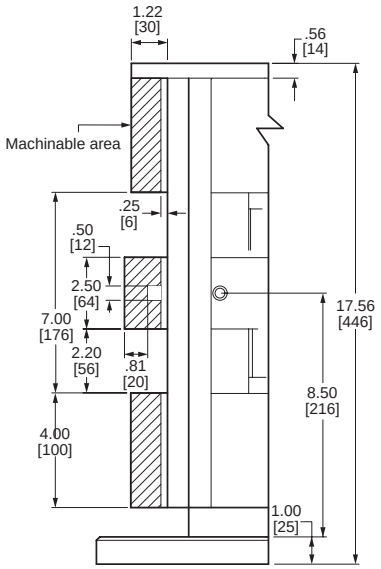

Column With Soft Jaws

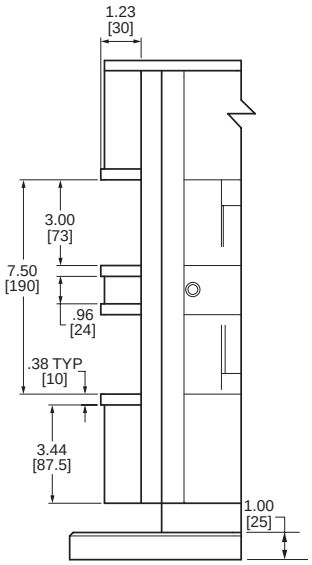

Column With Hard Jaws

Production Vise Columns – 4" (100mm)

4-Sided

The 4-Sided Columns have eight stations for holding parts. Two standard bases and custom mounting patterns are available. The universal base mounts directly to most HMC tables using the provided mounting holes on 80mm or 100mm centers.

Further reduce set-up times by adding the Jergens Ball Lock® Mounting System to your HMC. Exchange your vise columns and any other fixture in less than a minute. Location of all fixtures will repeat within ±0.0005" (±0.013mm) or better. Please contact Jergens Customer Service for more information.

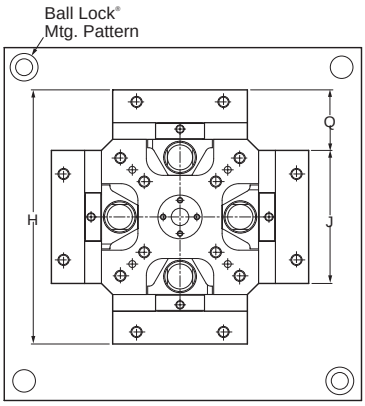

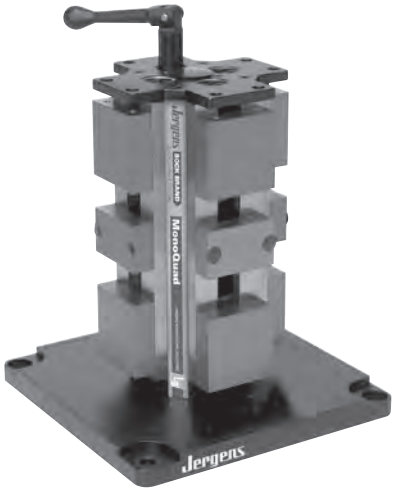

4-Sided 4" Vise Columns

Mounting	Part No.	H	J	Q	Base Width	Base Length	Ball Lock® Mtg Pattern	Mounting Pattern 1*	Mounting Pattern 2*	Wt. (lbs)	Ball Lock® Part No.	Shank Size
Ball Lock®	**49403**	9.56	4.00	2.80	15.75	15.75	14 x 14	n/a	n/a	132	**49602**	20mm x 1"
Universal	**49475**	9.56	4.00	2.80	11.81	11.81	n/a	80mm	100mm	122	—	—

4-Sided 100mm Vise Columns Metric Bases

Mounting	Part No.	H	J	Q	Base Width	Base Length	Ball Lock® Mtg Pattern	Mounting Pattern 1*	Mounting Pattern 2*	Wt. (Kg)	Ball Lock® Part No.	Shank Size
Ball Lock®	**69403**	240	100	70	400	400	350 x 350	n/a	n/a	60	**49652**	20mm x 25mm
Universal	**49475**	240	100	70	300	300	n/a	80mm	100mm	55	—	—

* Bases on Universal Columns are provided with two sets of mounting holes, to fit grids or T-Slots on 80mm and 100mm centers. Custom mounting patterns and base sizes are available upon request.

Production Vise Columns – 4" (100mm)
3-Sided

The 3-Sided Columns have six workstations, and may provide greater access to three or more sides of your work pieces. This design is especially beneficial on machining centers with large spindles. No need to sacrifice tool rigidity for access, by having tools extended too far from the tool holders. The universal base mounts directly to most HMC tables using the provided mounting holes on 80mm or 100mm centers.

Further reduce set-up time with the Jergens Ball Lock® Mounting System to your HMC. Exchange your vise columns and all other fixtures in less than a minute. Location of all fixtures will repeat within ±0.0005" (±0.013mm)or better.

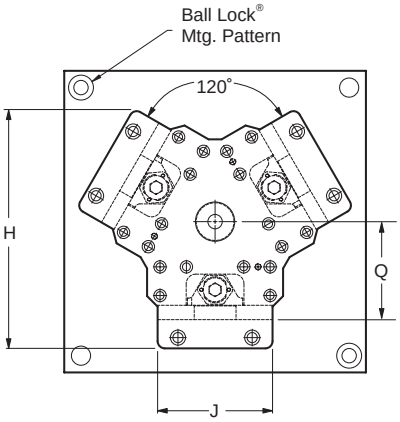

Tri-column design allows up to 240° accessibility

3-Sided 4" Vise Columns

Mounting	Part No.	H	J	Q	Base Width	Base Length	Ball Lock® Mtg Pattern	Mounting Pattern 1*	Mounting Pattern 2*	Wt. (lbs)	Ball Lock® Part No.	Shank Size
Ball Lock®	**49409**	9.55	4.00	4.22	15.75	15.75	14 x 14	n/a	n/a	125	**49602**	20mm x 1"
Universal	**49473**	9.55	4.00	4.22	11.81	11.81	n/a	80mm	100mm	115	—	—

3-Sided 100mm Vise Columns Metric Bases

Mounting	Part No.	H	J	Q	Base Width	Base Length	Ball Lock® Mtg Pattern	Mounting Pattern 1*	Mounting Pattern 2*	Wt. (Kg)	Ball Lock® Part No.	Shank Size
Ball Lock®	**69409**	225	100	90	400	400	350 x 350	n/a	n/a	57	**49652**	20mm x 25mm
Universal	**49473**	225	100	90	300	300	n/a	80mm	100mm	52	—	—

* Bases on Universal Columns are provided with two sets of mounting holes, to fit grids or T-Slots on 80mm and 100mm centers. Custom mounting patterns and base sizes are available upon request.

Indexer Systems

Maximize the productivity of your Vertical Machining Center. Jergens Production Columns can be mounted onto most any indexer. Columns can be attached directly to an indexer or become part of a quick-change system by adding the Jergens Ball Lock® Mounting System. **Contact Jergens Technical Service for help designing a system for your application**.

- Add capabilities to your VMC
- Reduce set-ups
- Mounts to most rotary table/indexer
- Hold 4, 6, or 8 parts in each load.
- Use standard jaws and accessories

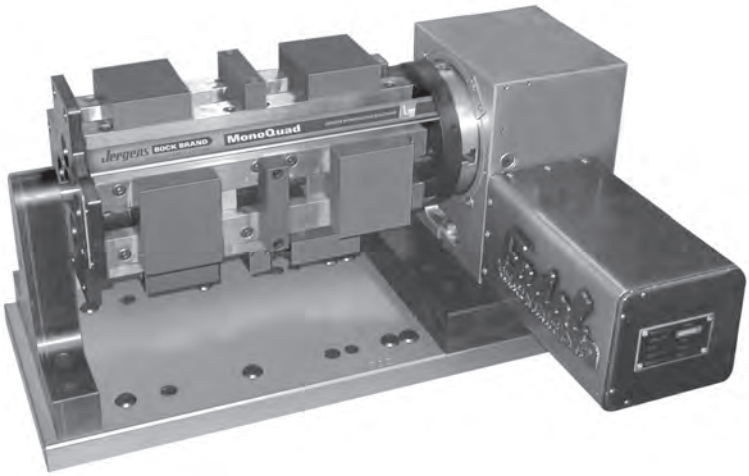

Jergens
WORKHOLDING SOLUTIONS GROUP

Production Vise Columns – 6" (150mm)

- 3 or 4-Sided Columns
- Multiple mounting systems
- Fastest quick-change jaw system
- Full jaw travel
- Hardened stainless steel rails support jaws and resist wear
- Fully sealed lead screw assembly
- Supplied with machinable soft jaws
- Available with hard jaws

Clamping Force

Jergens 6" (150mm)

Torque		Clamping Force	
lbs ft.	N•m	lbs	kgf
20	27	3,600	1,630
30	41	4,500	2,040
40	54	5,300	2,400
50	68	6,200	2,800
60	81	7,200	3,250
70	95	8,400	3,800
80	108	9,200	4,150
90	122	10,100*	4,550*

*Recommended Maximum

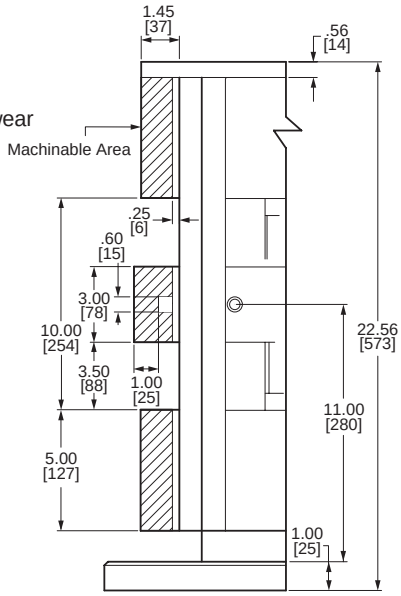

Column With Soft Jaws

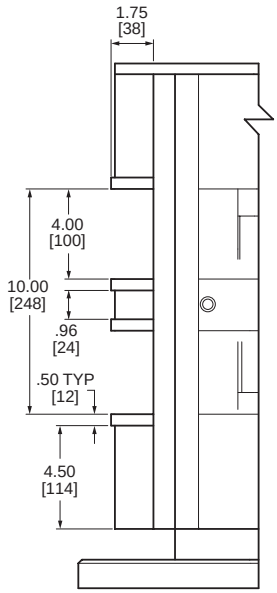

Column With Hard Jaws

Production Vise Columns – 6" (150mm)

4-Sided

The 4-Sided Columns are the workhorses of the Jergens Production Vise Columns. They have eight stations for holding your parts. Two standard bases are available. The universal base will mount directly to most HMC tables, using the provided mounting holes on 80mm or 100mm centers.

Further reduce set-up times by adding the Jergens Ball Lock® Mounting System to your HMC. Exchange your vise columns and any other fixture in less than a minute. Location of all fixtures will repeat within ±0.0005" (±0.013mm) or better.

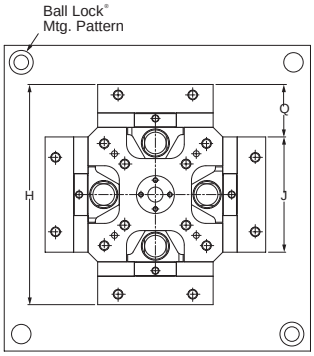

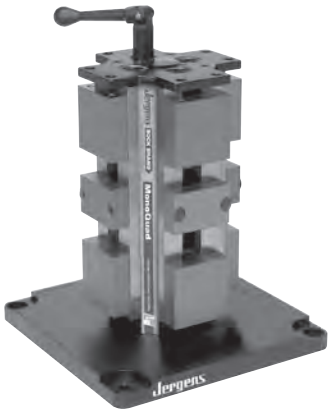

4-Sided 6" (150mm) Vise Columns

Mounting	Part No.	H	J	Q	Base Width	Base Length	Ball Lock® Mtg Pattern	Mounting Pattern 1*	Mounting Pattern 2*	Wt. (lbs)	Ball Lock® Part No.	Shank Size
Ball Lock®	**49412**	11.50	6.00	2.75	15.75	15.75	14 x 14	n/a	n/a	244	**49602**	20mm x 1"
Ball Lock®	**49404**	11.50	6.00	2.75	19.68	19.68	17 x 17	n/a	n/a	258	**49612**	25mm x 1"
Universal	**49476**	11.50	6.00	2.75	15.75	15.75	n/a	80mm	100mm	235	—	—

4-Sided 150mm Vise Columns Metric Bases

Mounting	Part No.	H	J	Q	Base Width	Base Length	Ball Lock® Mtg Pattern	Mounting Pattern 1*	Mounting Pattern 2*	Wt. (Kg)	Ball Lock® Part No.	Shank Size
Ball Lock®	**69412**	290	150	70	400	400	350 x 350	n/a	n/a	111	**49652**	20mm x 25mm
Ball Lock®	**69404**	290	150	70	500	500	425 x 425	n/a	n/a	117	**49662**	20mm x 25mm
Universal	**49476**	290	150	70	400	400	n/a	80mm	100mm	107	—	—

* Bases on Universal Columns are provided with two sets of mounting holes, to fit grids or T-Slots on 80mm and 100mm centers. Custom mounting patterns and base sizes are available upon request.

Jergens, Inc. | 15700 S. Waterloo Road | Cleveland, Ohio 44110-3898 USA

Production Vise Columns – 6" (150mm)
3-Sided

The 3-Sided Columns have only six workstations, but provide much greater access to three or more sides of your work pieces. This design is especially beneficial on machining centers with large spindle noses. No need to sacrifice tool rigidity for access, by having tools extended too far from the tool holders. The universal base will mount directly to most HMC tables, using the provided mounting holes on 80mm or 100mm centers.

Further reduce your set-up time by adding the Jergens Ball Lock® Mounting system to your HMC. Exchange your vise columns and all other fixtures in less than a minute. Location of all fixtures will repeat within ±0.0005" (±0.013mm)or better.

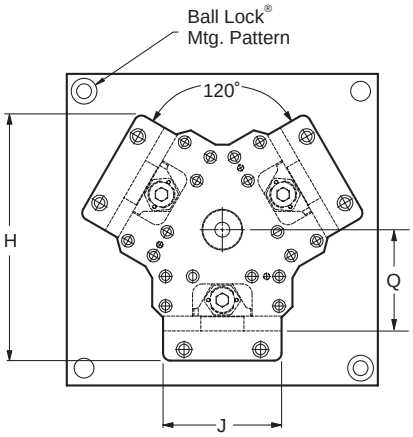

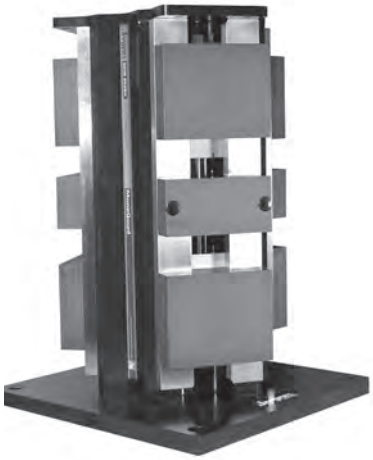

Tri-column design allows up to 240° accessibility

3-Sided 6" Vise Columns

Mounting	Part No.	H	J	Q	Base Width	Base Length	Ball Lock® Mtg Pattern	Mounting Pattern 1*	Mounting Pattern 2*	Wt. (lbs)	Ball Lock® Part No.	Shank Size
Ball Lock®	**49408**	12.57	6.00	5.12	15.75	15.75	14 x 14	n/a	n/a	252	**49602**	20mm x 1"
Ball Lock®	**49410**	12.57	6.00	5.12	19.68	19.68	17 x 17	n/a	n/a	266	**49612**	25mm x 1"
Universal	**49474**	12.57	6.00	5.12	19.68	19.68	n/a	80mm	100mm	240	—	—

3-Sided 150mm Vise Columns Metric Bases

Mounting	Part No.	H	J	Q	Base Width	Base Length	Ball Lock® Mtg Pattern	Mounting Pattern 1*	Mounting Pattern 2*	Wt. (Kg)	Ball Lock® Part No.	Shank Size
Ball Lock®	**69408**	318	150	130	400	400	350 x 350	n/a	n/a	115	**49652**	20mm x 25mm
Ball Lock®	**69410**	318	150	130	500	500	425 x 425	n/a	n/a	121	**49662**	25mm x 25mm
Universal	**49474**	318	150	130	500	500	n/a	80mm	100mm	109	—	—

* Bases on Universal Columns are provided with two sets of mounting holes, to fit grids or T-Slots on 80mm and 100mm centers.
Custom mounting patterns and base sizes are available upon request. .

Jergens
WORKHOLDING SOLUTIONS GROUP

Production Vise Columns
12 Station Hex

Jergens Hex Production Vise Columns provide 12 stations to maximize the number of parts per load. Available with bases to fit directly onto your machine table, or to a Ball Lock® sub-plate.

- Reduce part processing costs by machining 3 sides of 12 parts
- Increase unattended machine time
- Improve part throughput
- One piece column with hardened steel guide ways
- Full jaw travel permits clamping a larger variety of parts

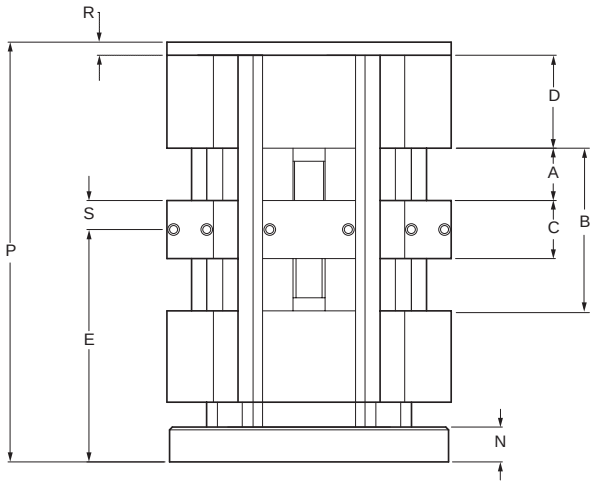

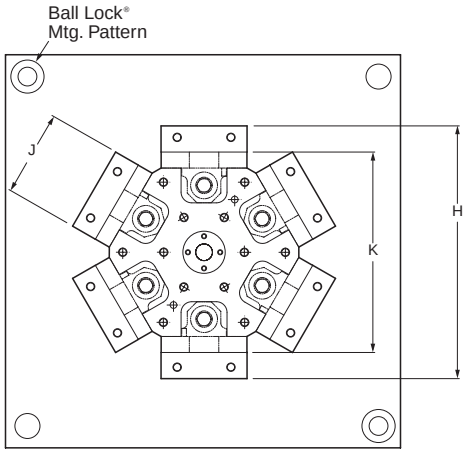

Hex Production Vise Columns (Inch & Metric)

Dimensions		Ball Lock® Base		Universal Base		Ball Lock® Base		Universal Base	
		49413	49414	49477	49478	69413	69414	69477	69478
	Vise Size	4"/100mm	6"/150mm	4"/100mm	6"/150mm	100mm	150mm	100mm	150mm
A	Max Jaw Opening*	2.25	3.50	2.25	3.50	56	88	56	88
B	Max Jaw Opening (1 station)*	7.00	10.00	7.00	10.00	178	254	178	254
C	Fixed Jaw Width	2.50	3.00	2.50	3.00	64	78	64	78
D	Moveable Jaw Length	4.00	5.00	4.00	5.00	100	127	100	127
E	Base to Center of Fixed Jaw	8.50	11.00	8.50	11.00	241	305	241	305
H	Overall Width	11.81	16.91	11.81	16.91	300	432	300	432
J	Jaw Width	4.00	6.00	4.00	6.00	100	150	100	150
K	Outside Rail to Rail	9.37	14.01	9.37	14.01	238	356	238	356
N	Base Plate Thickness	1.00	1.00	1.00	1.00	25	25	25	25
P	Overall Height	17.56	22.56	17.56	22.56	446	573	446	573
R	Top Plate Thickness	0.56	0.56	0.56	0.56	14	14	14	14
S	Center to Face	1.25	1.50	1.25	1.50	32	39	32	39
	Base Length & Width	15.75	19.68	15.75	19.68	400	500	400	500
	Ball Lock® Mounting Pattern	14x14	17x17	n/a	n/a	350x350	425x425	n/a	n/a
	Mounting Pattern 1**	n/a	n/a	80mm	80mm	n/a	n/a	80mm	80mm
	Mounting Pattern 2**	n/a	n/a	100mm	100mm	n/a	n/a	100mm	100mm
	Weight	206 lbs	355 lbs	206 lbs	355 lbs	94 Kg	161 Kg	94 Kg	161 Kg

* Larger parts can be clamped by machining jaws to fit workpiece.
**Bases on Universal Columns are provided with two sets of mounting holes, to fit grids or T-Slots on 80mm and 100mm centers.
Custom mounting patterns and base sizes are available upon request.

Production Vise Columns

12 & 16 Station Multi-Quads

Jergens Multi-Quad Production Vise Columns provide 12 or 16 stations to maximize the number of parts per load. Available with bases to fit directly onto your machine table, or to a Ball Lock® sub-plate.

- Machine more parts per set-up
- Reduce changeover time
- Hold larger parts
- Reduce cost per part
- Run longer without operator involvement

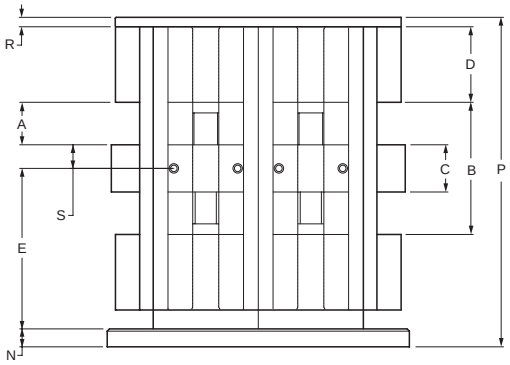

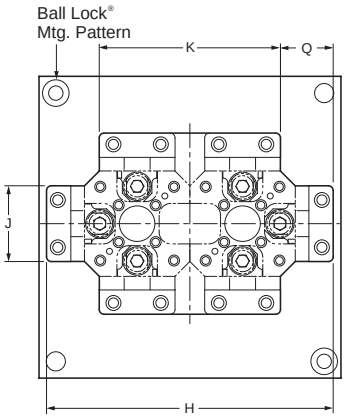

12 Station

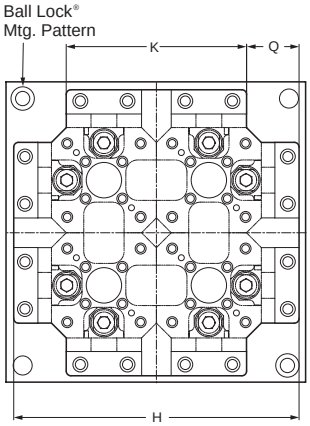

16 Station

Inch Multi-Quad Production Vise Columns

Dimensions		12 Station				16 Station			
		Ball Lock® Base		Universal Base		Ball Lock® Base		Universal Base	
		49415	49416	49479	49480	49417	49418	49481	49482
	Vise Size	4"/100mm	6"/150mm	4"/100mm	6"/150mm	4"/100mm	6"/150mm	4"/100mm	6"/150mm
A	Max Jaw Opening (2 station)*	2.25	3.50	2.25	3.50	2.25	3.50	2.25	3.50
B	Max Jaw Opening (1 station)*	7.00	10.00	7.00	10.00	7.00	10.00	7.00	10.00
C	Fixed Jaw Width	2.50	3.00	2.50	3.00	2.50	3.00	2.50	3.00
D	Moveable Jaw Length	4.00	5.00	4.00	5.00	4.00	5.00	4.00	5.00
E	Base to Center of Fixed Jaw	8.50	11.00	8.50	11.00	8.50	11.00	8.50	11.00
H	Overall Width	11.81	16.91	11.81	16.91	11.81	16.91	11.81	16.91
J	Jaw Width	4.00	6.00	4.00	6.00	4.00	6.00	4.00	6.00
K	Outside Rail to Rail	9.37	14.01	9.37	14.01	9.37	14.01	9.37	14.01
N	Base Plate Thickness	1.00	1.00	1.00	1.00	1.00	1.00	1.00	1.00
P	Overall Height	17.56	22.56	17.56	22.56	17.56	22.56	17.56	22.56
Q	Clearance	2.80	2.75	2.80	2.75	2.80	2.75	2.80	2.75
R	Top Plate Thickness	0.56	0.56	0.56	0.56	0.56	0.56	0.56	0.56
S	Center to Face	1.25	1.50	1.25	1.50	1.25	1.50	1.25	1.50
	Base Length & Width	15.75	19.68	15.75	19.68	15.75	19.68	15.75	19.68
	Ball Lock® Mounting Pattern	14x14	17x17	n/a	n/a	14x14	17x17	n/a	n/a
	Mounting Pattern 1**	n/a	n/a	80mm	80mm	n/a	n/a	80mm	80mm
	Mounting Pattern 2**	n/a	n/a	100mm	100mm	n/a	n/a	100mm	100mm
	Weight (lbs)	190	380	190	380	360	720	360	720

* Larger parts can be clamped by machining jaws to fit workpiece.

** Bases on Universal Columns are provided with two sets of mounting holes, to fit grids or T-Slots on 80mm and 100mm centers. Custom mounting patterns and base sizes are available upon request. Contact Jergens Technical Service for more information.

Jergens
WORKHOLDING SOLUTIONS GROUP

Production Vise Columns
12 & 16 Station Multi-Quads

Jergens Multi-Quad Production Vise Columns provide 12 or 16 stations to maximize the number of parts per load. Available with bases to fit directly onto your machine table, or to a Ball Lock® sub-plate.

- Machine more parts per set-up
- Reduce changeover time
- Hold larger parts
- Reduce cost per part
- Run longer without operator involvement

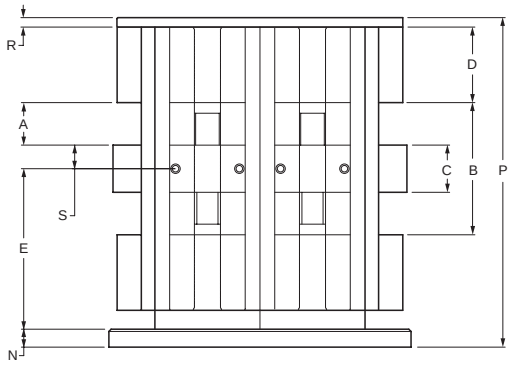

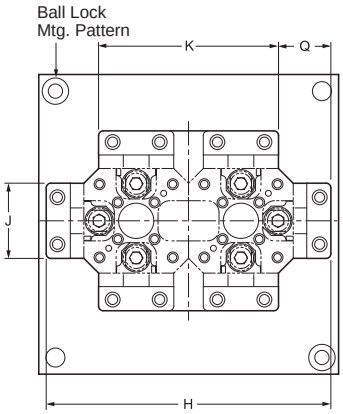

12 Station

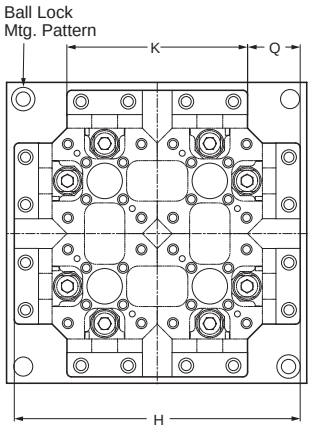

16 Station

Metric Multi-Quad Production Vise Columns

Dimensions		12 Station				16 Station			
		Ball Lock® Base		Universal Base		Ball Lock® Base		Universal Base	
		69415	69416	69479	69480	69417	69418	69481	69482
	Vise Size	100mm	150mm	100mm	150mm	100mm	150mm	100mm	150mm
A	Max Jaw Opening (2 station)*	56	88	56	88	56	88	56	88
B	Max Jaw Opening (1 station)*	176	254	176	254	176	254	176	254
C	Fixed Jaw Width	64	78	64	78	64	78	64	78
D	Moveable Jaw Length	100	127	100	127	100	127	100	127
E	Base to Center of Fixed Jaw	216	280	216	280	216	280	216	280
H	Overall Width	383	470	383	470	383	470	383	470
J	Jaw Width	100	150	100	150	100	150	100	150
K	Outside Rail to Rail	243	330	243	330	243	330	243	330
N	Base Plate Thickness	25	25	25	25	25	25	25	25
P	Overall Height	446	573	446	573	446	573	446	573
Q	Clearance	70	70	70	70	70	70	70	70
R	Top Plate Thickness	14	14	14	14	14	14	14	14
S	Center to Face	32	39	32	39	32	39	32	39
	Base Length & Width	400	500	400	500	400	500	400	500
	Ball Lock® Mounting Pattern	350x350	425x425	n/a	n/a	350x350	425x425	n/a	n/a
	Mounting Pattern 1**	n/a	n/a	80mm	80mm	n/a	n/a	80mm	80mm
	Mounting Pattern 2**	n/a	n/a	100mm	100mm	n/a	n/a	100mm	100mm
	Weight (Kgs)	86	172	86	172	164	326	164	326

* Larger parts can be clamped by machining jaws to fit workpiece.

**Bases on Universal Columns are provided with two sets of mounting holes, to fit grids or T-Slots on 80mm and 100mm centers. Custom mounting patterns and base sizes are available upon request. Contact Jergens Technical Service for more information.

Hydraulic Production Vises

- Innovative compact design
- Internal hydraulics
- 4,700 lbs (2,100 Kg) clamping force
- Operates on lower input pressure
- Fully machinable jaws
- Fastest quick-change jaw system
- Hardened stainless steel wear rails
- Easy-Flow™ base design

Hydraulic Power Sources Available

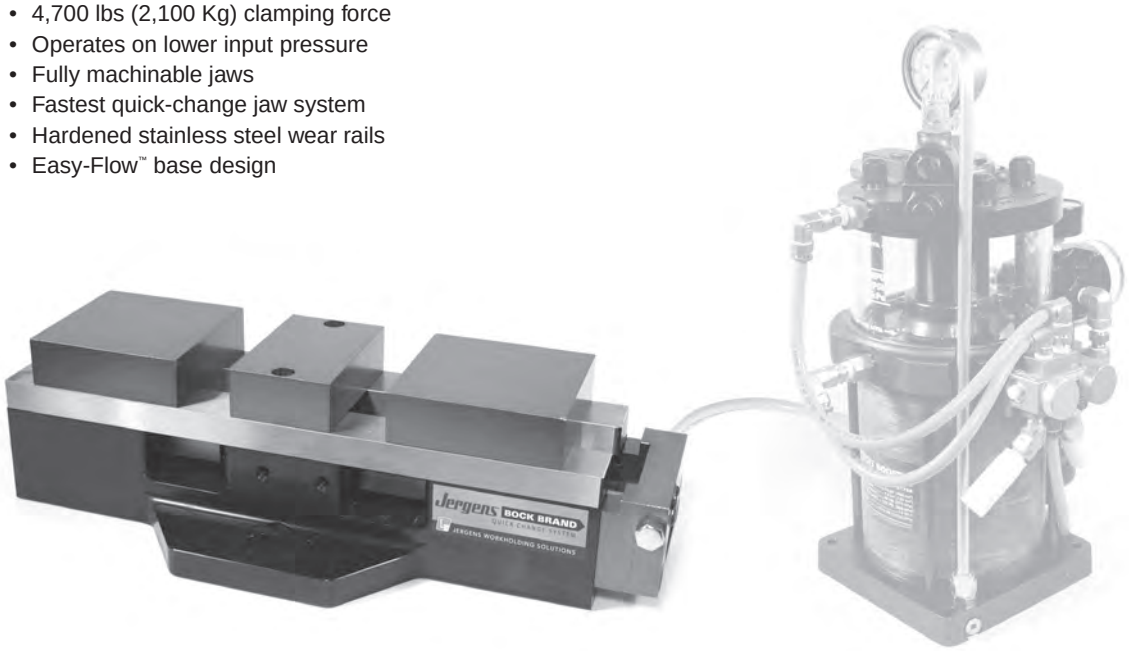

Technical Specifications:

Hydraulic Clamping Stroke: 1/4" (6.3mm)
Operating Volume: 0.4 Cu In (6.7 cm^3)
Maximum Input Pressure: 4000 P.S.I. (275 bar)
Minimum Input Pressure: 500 P.S.I. (35 bar)
Input Port: #4 SAE (7/16-20 UNF-2B)

Clamping Force (lbs) = Input Pressure x 1.19
Clamping Force (Kg) = Input Pressure Bars x 7.67

Operation:

Using the Jergens Hydraulic Vise handle part number 49445, tighten vise jaws so the workpieces touch the fixed jaw. Next, turn the handle back 1/2 turn and activate the hydraulic cylinder. Handle included with vise.

Note: Only use the Jergens Hydraulic Vise Handle Part No. 49445 for adjustment purpose, do not use to operate vise.

Jergens hydraulic vises are available in 3 different base configurations. They offer the same unique features as Jergens manual vises.

Clamping Force

Input Pressure		Clamping Force	
PSI	Bars	lbs	kgf
500	35	595	268
1,000	70	1,190	537
2,000	140	2,380	1,075
3,000	210	3,570	1,612
4,000	275*	4,760*	2,110*

*Recommended Maximum

Jergens
WORKHOLDING SOLUTIONS GROUP

Hydraulic Production Vises – 4" (100mm)

Universal Base

Part Number	Wt. lbs/Kg
49483	35/16

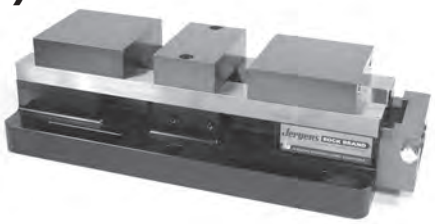

- Easy to mount directly to machine tables
- Slotted mounting holes fit most machines

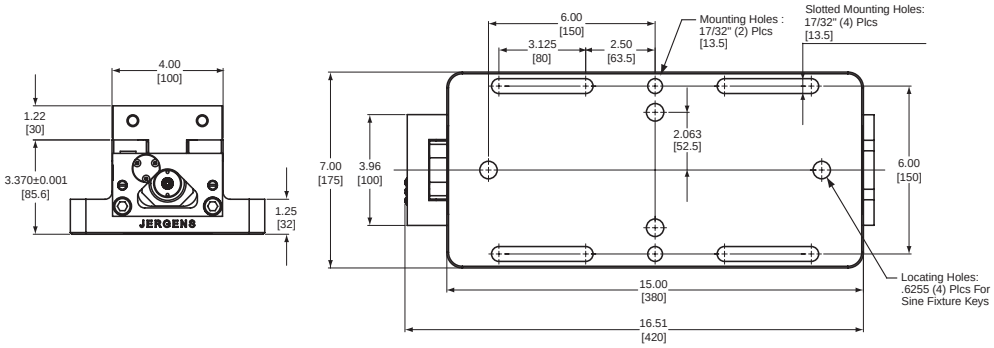

Ball Lock® Base

- Designed for use with the Jergens Ball Lock® mounting system
- Jigsaw pattern allows for "nesting" on Jergens Ball Lock® subplates

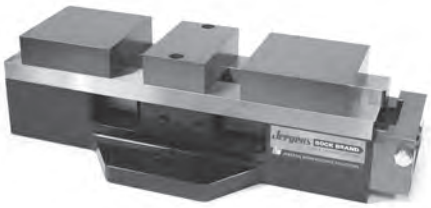

Inch

Part No.	Wt.	Ball Lock® Shank Part No.	Shank Size
49485	32 lbs	**49601**	20mm x 3/4"

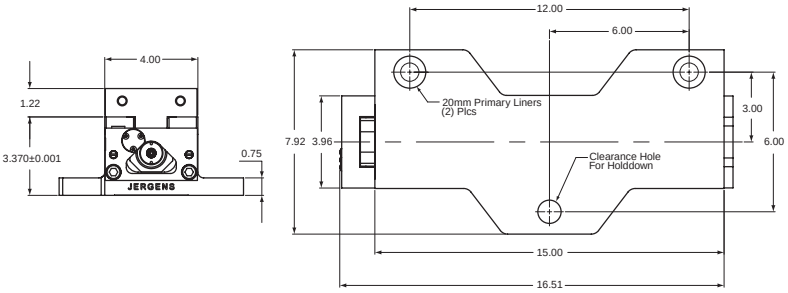

Metric

Part No.	Wt.	Ball Lock® Shank Part No.	Shank Size
69485	15 Kg	**49651**	20mm x 20mm

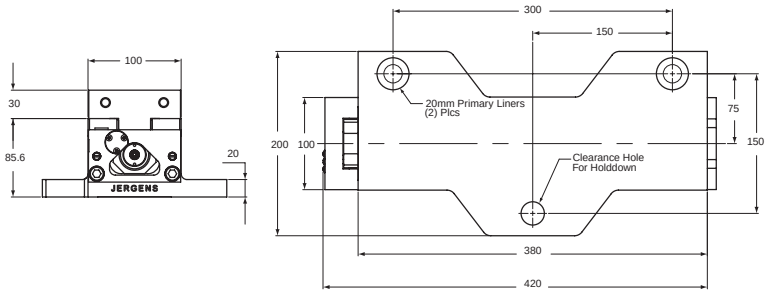

Hydraulic Production Vises – 4" (100mm)

Narrow Base

- Designed for stand alone or fixture plate mounting
- Slim design enables high density mounting

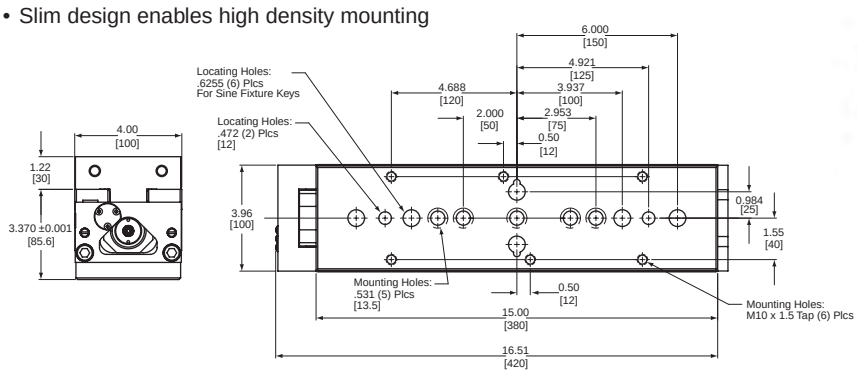

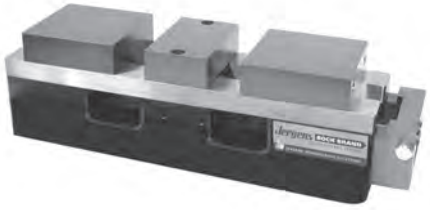

Part Number	Wt. lbs/Kg
49487	30/14

Hydraulic Production Vises – 6" (150mm)

Universal Base

- Easy to mount directly to machine tables
- Slotted mounting holes fit most machines

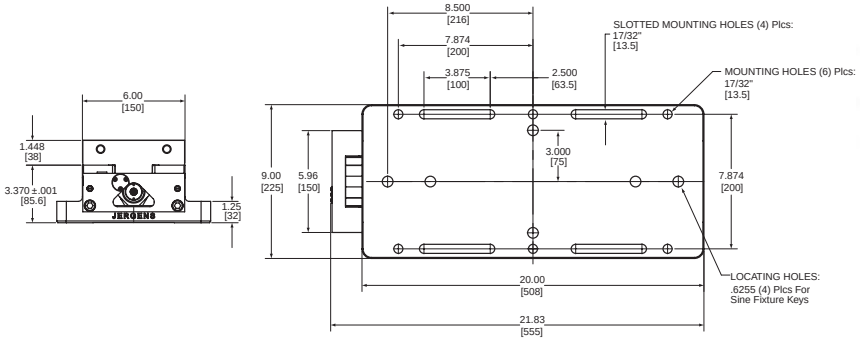

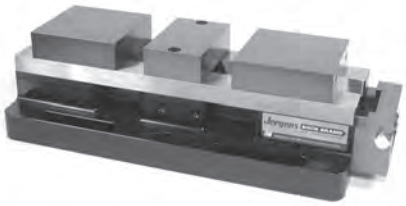

Part Number	Wt. lbs/Kg
49484	65/29

Narrow Base

- Designed for stand alone or fixture plate mounting
- Slim design enables high density mounting on fixture plates

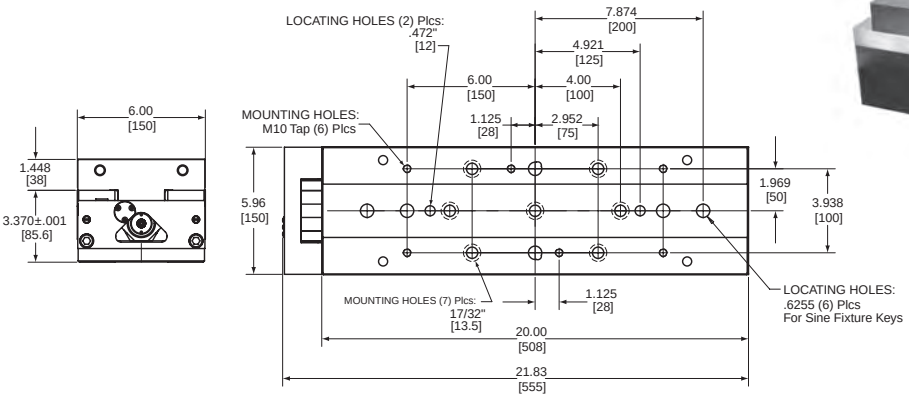

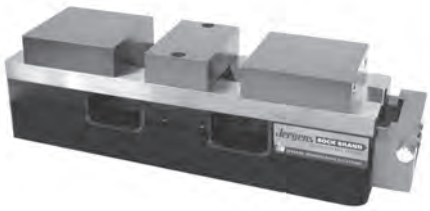

Part Number	Wt. lbs/Kg
49488	60/27

Hydraulic Production Vises – 6" (150mm)

Ball Lock® Base

- Designed for use with the Jergens Ball Lock® mounting system
- Jigsaw pattern allows for "nesting" on Jergens Ball Lock® subplates

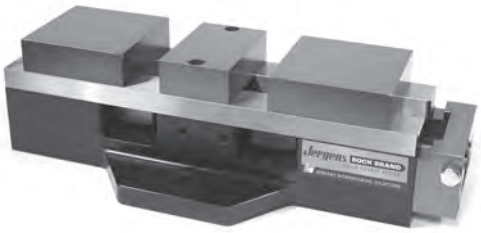

Inch

Part No.	Wt.	Ball Lock® Shank Part No.	Shank Size
49486	62 lbs	**49601**	20mm x 3/4"

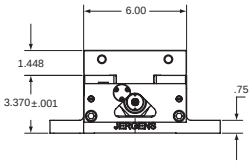

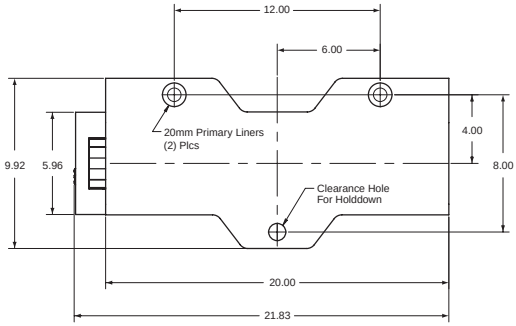

Metric

Part No.	Wt.	Ball Lock® Shank Part No.	Shank Size
69486	28 Kg	**49651**	20mm x 20mm

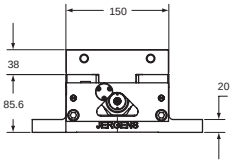

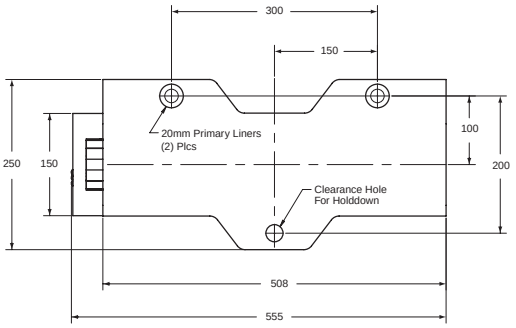

Hydraulic Vise Column

- Innovative compact design.
- Consistent clamping force:
  595 – 4,760 lbs
  268 – 2,110 Kgs
- Available in 4" (100mm) and 6" (150mm) sizes, 3-sided and 4-sided models.

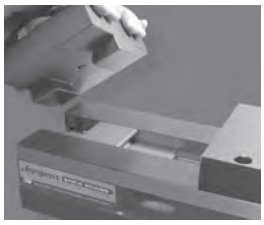

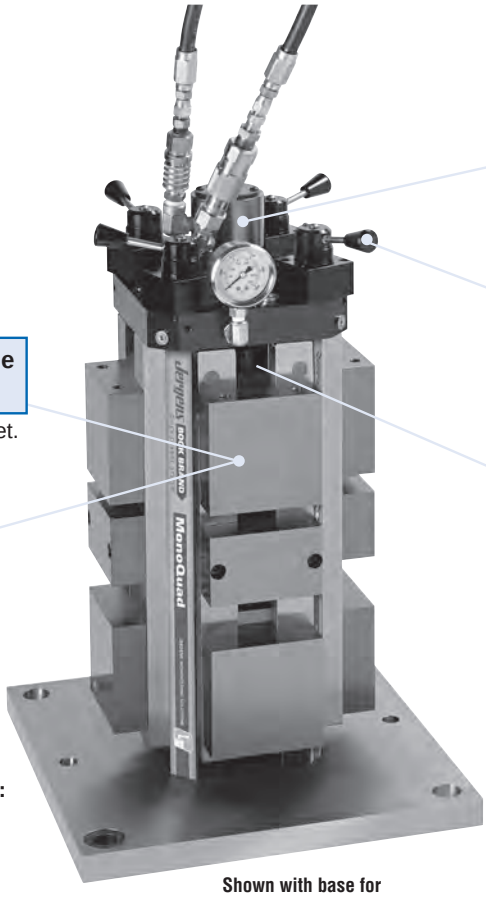

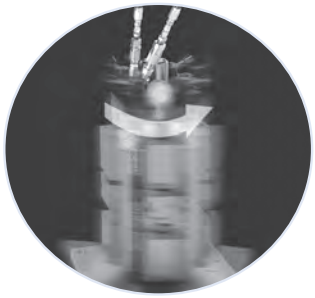

Rotary Hydraulic Union Dual Passage

Allows vise to rotate while hoses remain stationary.

Individual Control Valves

Operate Vises one at a time.

Fully Machinable and Reversible Aluminum/Steel Jaws

More workholding flexibility per jaw set.

Fastest Quick-Change Jaw Mechanism.

Reduce set-up times, faster workpiece change over.

Built-in Accumulator with Check Valves

Permits easy disconnection when clamped.

Hydraulic Vise Column Kits Include:

- Control Valves for each side.
- Rotary Coupler Dual Passage.
- Internal Accumulator.
- Pressure Gauge:
  500–4000 PSI (35–275 Bar).
- Adjustment Handle included with all columns.

Shown with base for Ball Lock MOUNTING SYSTEM
Other bases offered.

Clamping Force Measured at Jaws

Input Pressure		Clamping Force	
psi	bars	lbs	Kg
500	35	595	268
1,000	70	1,190	537
2,000	140	2,380	1075
3,000	210	3,570	1612
4,000*	275*	4,760	2110

*Recommended Maximum

Download Cad Models!
www.jergensinc.com

Technical Specifications:

Hydraulic Clamping Stroke: 1/4" (6.3 mm) total for both sides.
Operating Volume: 0.4 cu in (6.6 cm^3) – per station.
Input Pressure: 500–4000 psi (35–275 bar).
Dual station with center jaw for location; Cannot be used as a single station vise.

Setup & Operation:

1) Prepare machinable aluminum jaws or steel jaws to fit the workpiece.
2) Using the Jergens Hydraulic Vise adjustment handle to tighten vise jaws until the workpieces touch the fixed jaw.
3) Next, turn the handle back 1/2 to 2 revolutions to set opening.
4) Actuate the hydraulic source to operate control valves for each face.

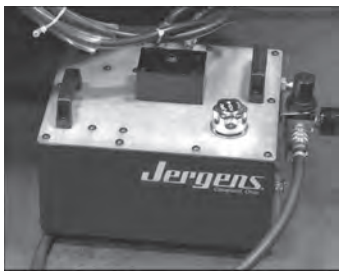

See page 106 for Air Powered Hydraulic Pump

Jergens
WORKHOLDING SOLUTIONS GROUP

Hydraulic Vise Tooling Columns – 4" (100mm)

- Individual valving allows each vise to operate independently.
- Hydraulic vise ensures repeatable results with minimal effort when compared to manual vises.
- Fast quick-change jaw mechanism.
- Hydraulic Vise Columns supplied with 4" (100mm) wide machinable aluminum jaws. Extra wide jaws, extra tall jaws and hardened jaw sets and all steel jaws are standard options. 3-sided and four-sided models available.
- All Jergens vises include machinable, reversible jaws; hardened stainless steel rails; and fully sealed lead screw assembly.

Standard and Custom Bases Available

* Tank Quick Disconnect Sleeve Part Number **718241**

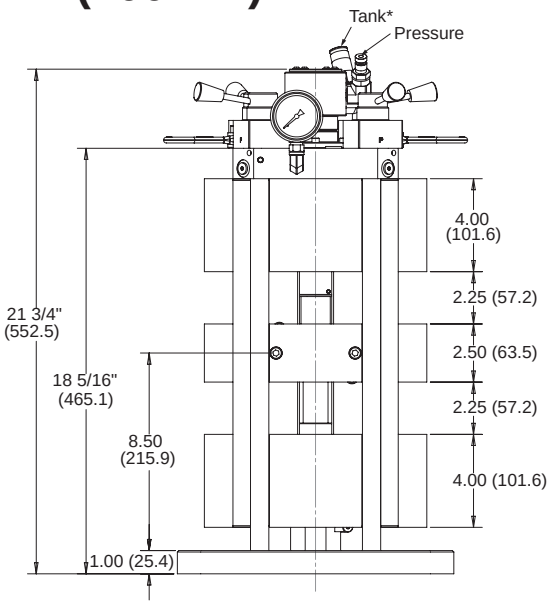

Column With Soft Jaws (Hard Jaws available)

4-Sided – 4" (100mm) wide

The 4-Sided Columns have eight stations for holding workpieces. Two standard bases are shown and custom mounting patterns and special base dimensions available. The universal base will mount directly to most HMC tables, using the provided mounting holes on 80mm or 100mm centers.

Further reduce set-up times by adding the Jergens Ball Lock® Mounting System to your HMC. Exchange your vise columns and any other fixture in less than a minute. Location of fixtures will repeat within ±0.0005" (0.013mm) or better.

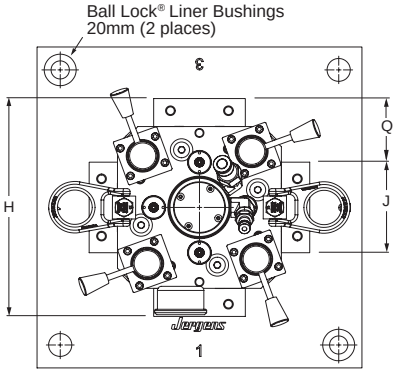

Top View with Ball Lock® Base shown

4-Sided 4" Vise Columns

Mounting	Part Number	H	J	Q	Base Width	Base Length	Ball Lock® Mtg Pattern	Mounting Pattern 1*	Mounting Pattern 2*	Ball Lock® Shank Part No.	Wt. (lbs)
Ball Lock®	**51403**	9.56	4.00	2.80	15.75	15.75	14 x 14	n/a	n/a	**49602**	150
Universal	**51475**	9.56	4.00	2.80	11.81	11.81	n/a	80mm	100mm	N/A	148

4-Sided 100mm Vise Columns Metric Bases

Mounting	Part Number	H	J	Q	Base Width	Base Length	Ball Lock® Mtg Pattern	Mounting Pattern 1*	Mounting Pattern 2*	Ball Lock® Shank Part No.	Wt. (Kgs)
Ball Lock®	**51453**	242.8	101.6	71.1	400	400	350 x 350	n/a	n/a	**49652**	68
Universal	**51475**	242.8	101.6	71.1	300	300	n/a	80mm	100mm	N/A	67

* Bases on Universal Columns are provided with two sets of mounting holes, to fit grids or T-Slots on 80mm and 100mm centers. Custom mounting patterns and base sizes are available upon request.

Hydraulic Vise Tooling Columns
3-Sided – 4" (100mm) wide

- Provide greater access to three or more sides of the workpiece.
- Design is beneficial on machining centers with large spindle noses.
- Reduce any sacrifice of tool rigidity for access.
- The universal base will mount directly to most HMC tables, using the provided mounting holes on 80mm or 100mm centers.
- Further reduce set-up times by adding the Jergens Ball Lock® Mounting System to your HMC. Exchange your vise columns and all other fixtures in less than a minute. Location of all fixtures will repeat within ±0.0005" (0.013mm) or better.

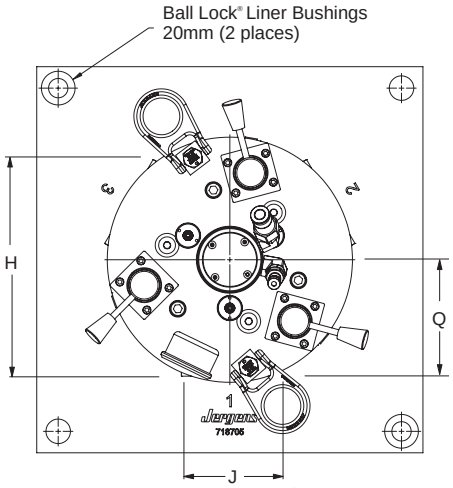

Top View with Ball Lock® Base shown

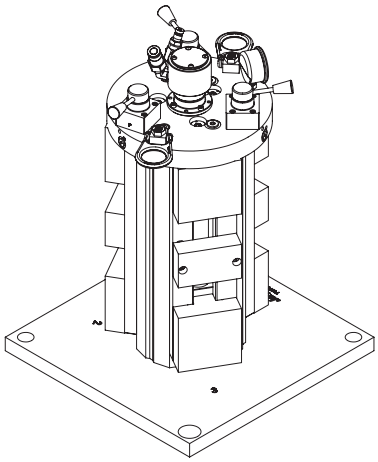

Allows for up to 240° accessibility.

3-Sided 4" Vise Columns

Mounting	Part Number	H	J	Q	Base Width	Base Length	Ball Lock® Mtg Pattern	Mounting Pattern 1*	Mounting Pattern 2*	Ball Lock® Shank Part No.	Wt. (lbs)
Ball Lock®	**51409**	9.55	4.00	4.22	15.75	15.75	14 x 14	n/a	n/a	**49602**	160
Universal	**51473**	9.55	4.00	4.22	11.81	11.81	n/a	80mm	100mm	N/A	145

3-Sided 100mm Vise Columns Metric Bases

Mounting	Part Number	H	J	Q	Base Width	Base Length	Ball Lock® Mtg Pattern	Mounting Pattern 1*	Mounting Pattern 2*	Ball Lock® Shank Part No.	Wt. (Kgs)
Ball Lock®	**51459**	242.6	101.6	107.2	400	400	350 x 350	n/a	n/a	**49652**	72
Universal	**51473**	242.6	101.6	107.2	300	300	n/a	80mm	100mm	N/A	66

* Bases on Universal Columns are provided with two sets of mounting holes, to fit grids or T-Slots on 80mm and 100mm centers. Custom mounting patterns and base sizes are available upon request.

Jergens
WORKHOLDING SOLUTIONS GROUP

Hydraulic Vise Tooling Columns – 6" (150mm)

- Individual valving allows each vise to operate independently.
- Hydraulic vise ensures repeatable results with minimal effort when compared to manual vises.
- Fast quick-change jaw mechanism.
- Hydraulic Vise Columns supplied with 6" (150mm) wide machinable aluminum jaws. Extra wide jaws, extra tall jaws and hardened jaw sets and all steel jaws are standard options. 3-sided and four-sided models available.
- All Jergens vises include machinable, reversible jaws; hardened stainless steel rails; and fully sealed lead screw assembly.

Standard and Custom Bases Available

* Tank Quick Disconnect Sleeve Part Number **718241**

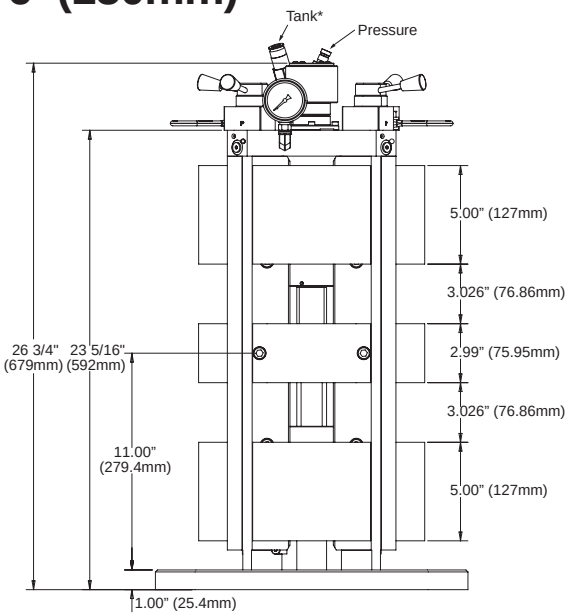

Column With Soft Jaws (Hard Jaws available)

4-Sided – 6" (150mm) wide

The 4-Sided Columns have eight stations for holding workpieces. Two standard bases are available. The universal base will mount directly to most HMC tables, using the provided mounting holes on 80mm or 100mm centers.

Further reduce set-up times by adding the Jergens Ball Lock® Mounting System to your HMC. Exchange your vise columns and any other fixture in less than a minute. Location of fixtures will repeat within ±0.0005" (0.013mm) or better.

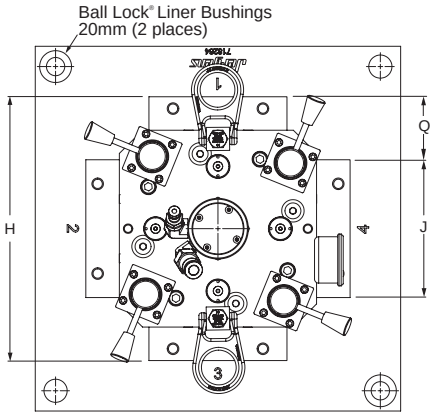

Top View with Ball Lock® Base shown

4-Sided 6" Vise Columns

Mounting	Part Number	H	J	Q	Base Width	Base Length	Ball Lock® Mtg Pattern	Mounting Pattern 1*	Mounting Pattern 2*	Ball Lock® Shank Part No.	Wt. (lbs)
Ball Lock®	**51412**	11.50	6.00	2.75	15.75	15.75	14 x 14	n/a	n/a	**49602**	270
Ball Lock®	**51404**	11.50	6.00	2.75	19.68	19.68	17 x 17	n/a	n/a	**49612**	285
Universal	**51476**	11.50	6.00	2.75	15.75	15.75	n/a	80mm	100mm	N/A	270

4-Sided 150mm Vise Columns Metric Bases

											(Kgs)
Ball Lock®	**51462**	292.1	152.4	69.9	400	400	350 x 350	n/a	n/a	**49652**	122
Ball Lock®	**51454**	292.1	152.4	69.9	500	500	425 x 425	n/a	n/a	**49662**	130
Universal	**51476**	292.1	152.4	69.9	400	400	n/a	80mm	100mm	N/A	122

* Bases on Universal Columns are provided with two sets of mounting holes, to fit grids or T-Slots on 80mm and 100mm centers. Custom mounting patterns and base sizes are available upon request.

Hydraulic Vise Tooling Columns
3-Sided – 6" (150mm) wide

The 3-Sided Columns have six workstations to provide greater access to three or more sides of the workpiece. This design is especially beneficial on machining centers with large spindle noses. This can reduce any sacrifice of tool rigidity for access, by having tools extended too far from the tool holders. The universal base will mount directly to most HMC tables, using the provided mounting holes on 80mm or 100mm centers.

Further reduce set-up times by adding the Jergens Ball Lock® Mounting System to your HMC. Exchange your vise columns and all other fixtures in less than a minute. Location of all fixtures will repeat within ±0.0005" (0.013mm) or better.

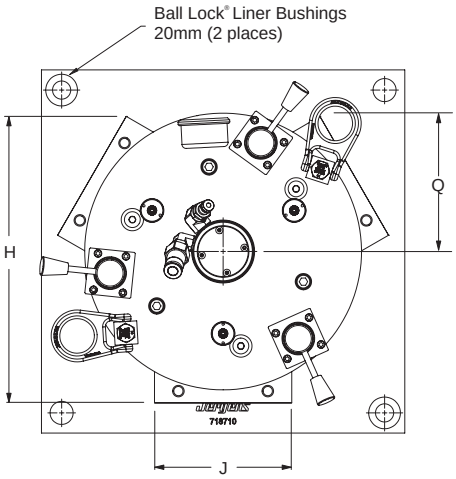

Top View with Ball Lock® Base shown

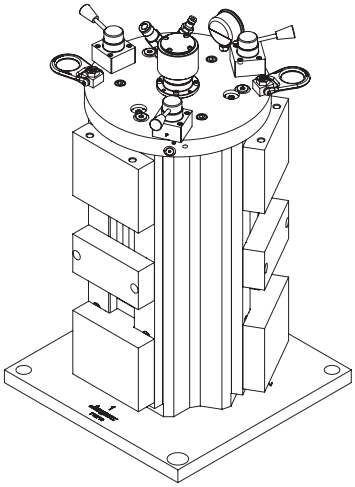

Allows for up to 240° accessibility.

3-Sided 6" Vise Columns

Mounting	Part Number	H	J	Q	Base Width	Base Length	Ball Lock® Mtg Pattern	Mounting Pattern 1*	Mounting Pattern 2*	Ball Lock® Shank Part No.	Wt. (lbs)
Ball Lock®	**51408**	12.57	6.00	5.12	15.75	15.75	14 x 14	n/a	n/a	**49602**	300
Ball Lock®	**51410**	12.57	6.00	5.12	19.68	19.68	17 x 17	n/a	n/a	**49612**	320
Universal	**51474**	12.57	6.00	5.12	19.68	19.68	n/a	80mm	100mm	N/A	320

3-Sided 150mm Vise Columns Metric Bases

Mounting	Part Number	H	J	Q	Base Width	Base Length	Ball Lock® Mtg Pattern	Mounting Pattern 1*	Mounting Pattern 2*	Ball Lock® Shank Part No.	Wt. (Kgs)
Ball Lock®	**51458**	319.3	152.4	130	400	400	350 x 350	n/a	n/a	**49652**	136
Ball Lock®	**51460**	319.3	152.4	130	500	500	425 x 425	n/a	n/a	**49662**	145
Universal	**51474**	319.3	152.4	130	500	500	n/a	80mm	100mm	N/A	145

* Bases on Universal Columns are provided with two sets of mounting holes, to fit grids or T-Slots on 80mm and 100mm centers. Custom mounting patterns and base sizes are available upon request.

Hydraulic Vise Tooling Columns Standard Subplates

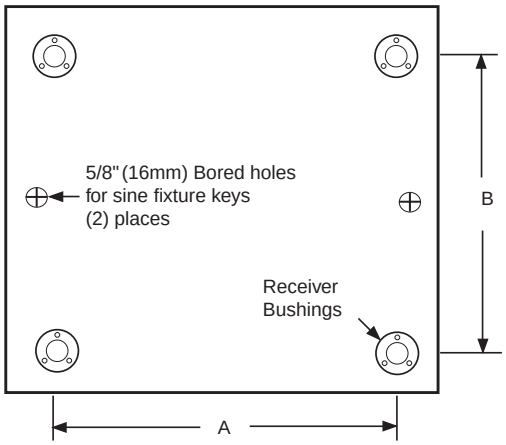

Standard Steel Subplates for Vise Columns

Part Number	Pallet Size (mm)	For Vise Columns	A (in.)	B (in.)	Receiver Size (mm)	Thickness of Subplate (in.)	Wt (lbs)
49102	400	**51403, 51409 51412,51408**	14	14	20	1.125	79
49103	500	**51404, 51410**	17	17	25	1.25	137
49103-C	500	**All above**	14	14	20	1.25	137
Combination Subplate			17	17	25		

Metric Steel Subplates for Vise Columns

Part Number	Pallet Size (mm)	For Vise Columns	A (mm)	B (mm)	Receiver Size (mm)	Thickness of Subplate Wt. (in.)(Kg)	
59102	400	**51453, 51459 51462, 51458**	350	350	20	28.57	31
59103	500	**51454, 51460**	425	425	25	31.75	59
59103-C	500	**All above**	350	350	20	31.75	59
Combination Subplate			425	425	25		

Hydraulic Production Vise Accessories

Pre-Fill Boosters Kit

Patent No. 3839866

Part Number
61725

Jergens Booster Kit provides a complete compact power source for hydraulic vises. The kit includes a Jergens 30:1 pre-fill self-bleeding booster with filter regulator, 4 way push button actuation valve, plumbed with all fittings and hoses.

This air operated booster provides enough hydraulic volume to power up to 8 Jergens Hydraulic vises.

- **Self Bleeding**
- **Easy View Reservoir**
- **30:1 Boost Ratios**

Kit 61725 Includes

- Jergens Pre-Fill Booster 61705 (see above)
- Filter Regulator
- Actuator Valve

Specifications

Part Number	61705
Reservoir Capacity (cu. in.) / Liters	50 / 0.8
High Pressure Volume (cu. in.) / cm^3	3 $^3/_4$ / 61
Minimum Input (psi) / bar	40 / 2.7
Maximum Input (psi) / bar	125 / 8.6
Boost Ratio	30:1 / 30:1
Maximum Output (psi) / bar	3,750 / 258.5
Weight (lbs) / Kg	28 / 13

Handle

Part Number
49445

- Ergonomic design
- Aluminum handle
- 1/4" Steel Drive Hex for Jergens Hydraulic Vises

Handle for Hydraulic Vises, 4" (100mm) and 6" (150mm)

Rotary Hydraulic Union

Dual Passage, Ports 1/4 NPT

Part Number
61999

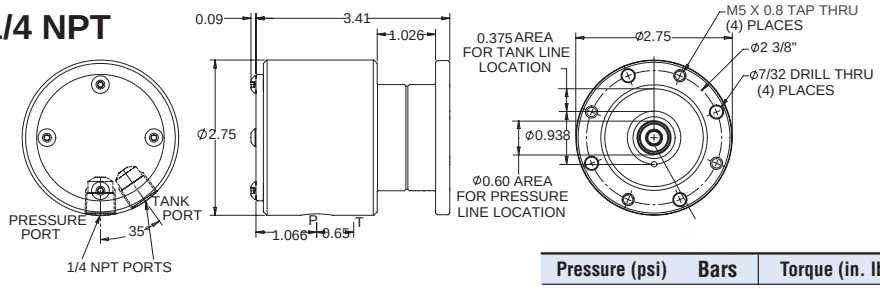

Max input pressure of Tank Port: 150 psi (10 bar)
Max input pressure of Pressure Port: 4000 psi (275 bar)
Max RPM: 30

Pressure (psi)	Bars	Torque (in. lbs)	Nm
0	0	10	1.1
2000	140	25	2.8
4000	275	40	4.5

Jergens
WORKHOLDING SOLUTIONS GROUP

Hydraulic Production Vise Accessories

Air-Powered Hydraulic Pumps

Shoebox™ Pumps

Part Number
61759

The "Shoebox" Pump is a low cost, compact unit used on smaller hydraulic circuits. Its small size offers the versatility of mounting on wheels (such as a workcart) and moving the pump from workstation to workstation. The "Shoebox" is a cost effective power source for hydraulic tooling column vises.

Specifications

Part Number	61755
Reservoir Capacity	300 cu. in. (4.9 liter)
Minimum Input	25 psi (1.7 Bar)
Maximum Input	125 psi (8.5 Bar)
Boost Ratio	36:1
Maximum Output	4500 psi (306 Bar)
Free Flow @100 psi (6.8 Bar)	100 cu.in./min. (1.64 liter/min.)
Weight	24 lbs (11Kg)

Note: Do not use more than 4,000 PSI input pressure on Jergens Vises

Kit Includes

61755 36:1 Pump

61643 Remote four-way zero-leakage valve with subplate

60703 6000psi (414 Bar) gauge

61755 Performance Curve*

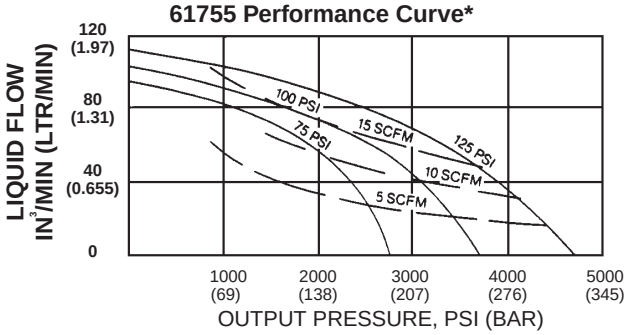

Quick Disconnect Couplers

Hydraulic Coupler

Sleeve	Nipple
1/4 NPT Female	1/4 NPT Male
61916	**61966**

Hydraulic couplers have dual checks.

Air Couplers

Sleeve	Nipple
1/8 NPT Female	1/8 NPT Male
61904	**61950**
1/4 NPT Female	1/4 NPT Male
61905	**61951**
	1/4 NPT Female
	61954

Air couplers have checks on sleeves only.

Adapters & Elbows

Adapter for BSP	Elbows
1/4 Male NPT	1/4 NPT x 1/4 Tube
1/4 Female BSP	
60221	**61004**

Air Hose

Low pressure flexible PVC air hose is sold by the foot in bulk lengths. Order the total footage and number of push-on fittings required by using the number to the right.

Low Pressure Air Hose

Hose I.D.	1/4"	3/8"	1/2"
Hose Part Number	**61106**	**61108**	**61110**
Fitting Part Number	**61107**	**61109**	**61111**

Hydraulic Hose

High pressure hose is supplied assembled and to lengths indicated. Lengths are measured from end of coupling to end of coupling. Hose is 3/8" ID and available in 4000 psi or 7000 psi rating. 3/8" female tubing fittings on each end.

High Pressure Hydraulic Hose

Length	12"	18"	24"	36"	72"
Part Number 4000 psi	**61201**	**61202**	**61203**	**61204**	**61205**
Part Number 7000 psi	**61211**	**61212**	**61213**	**61214**	**61215**

*Also available in 5000 psi.

Hydraulic Hose (Build Your Own)

Length	25'	Hose Ends	Hose Ends
Part Number	**61221**	**61226**	**61227**
2750 psi	1/4 Hose	1/4 Npt Male	1/4 37° JIC Swivel Female

Jergens Production Vise System
Flexible Clamping – Flexible Production

Variable batch sizes? Many different types of workpieces? Frequent set-ups?

The Jergens Production Vise System is the answer for these manufacturing flexibility issues!

Extra Wide Jaws

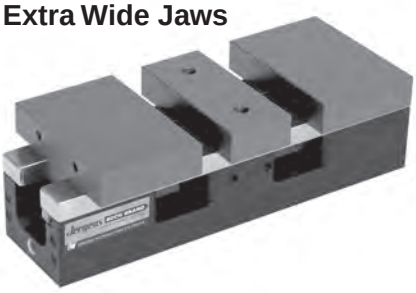

Dual Station with Hard Jaw

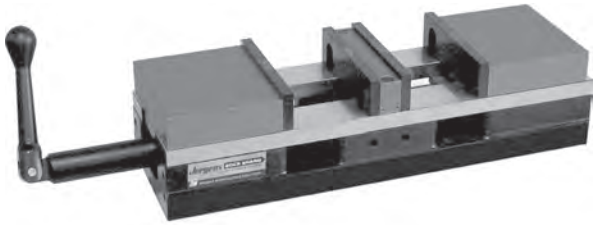

Full Face Vise Plate

Single Workpiece with Hard Jaws

Aluminum jaws can be completely milled, therefore a high degree of adaptability to the workpiece shape. For clamping, stop, and supporting surfaces.

Hard coated base made of high-strength, light-weight, aluminum extrusion. Guideway Rails made of hardened stainless steel.

Completely sealed lead screw assembly for trouble-free operation, power transmission through inserted steel nut, large slide stroke.

The clamping system consists of only a few components, for quick dismantling and minimum maintenance.

Aluminum or steel jaws suitable for milling:

- Milling of stop, supporting and clamping surfaces
- Quick set-up for formed parts and workpieces with complex clamping contours
- Significant reduction in expenditure on fixtures

Jaws change in a few seconds:

- Rapid changeover from one workpiece to the next
- Machine downtimes are minimized

High versatility:

- The clamping element can be made available for simple and complex clamping applications in a very short time

Jergens
WORKHOLDING SOLUTIONS GROUP

Production Vise Jaws

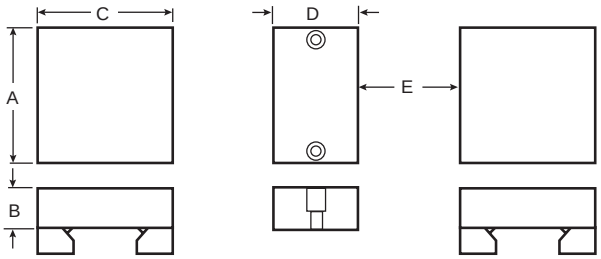

Soft Jaws

• Standard Jaws are machinable aluminum.

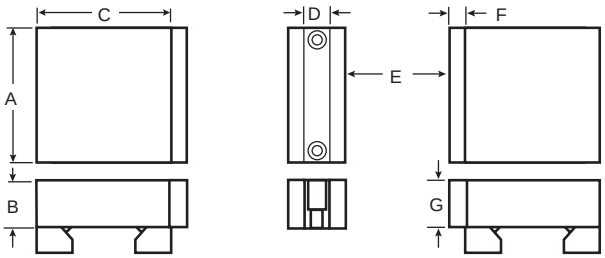

Hard Jaw Carrier Set with hardened steel inserts

Jaws for 4" (100mm) Production Vises

Part Number	Description	A	B	C	D	E [1]	F	G
49420	Standard Machinable Soft Jaw Set (3pcs.)	3.95	1.22	4.00	2.50	2.20		
49421*	Pair of Std Moveable Jaws Only (2pcs.)	3.95	1.22	4.00				
49422	Std Fixed Jaw Only (1pc.)	3.95	1.22		2.50			
49423	Extra Wide Machinable Soft Jaw Set (3pcs.)	5.95	1.22	4.00	2.50	2.20		
49424*	Pair of Wide Moveable Jaws Only (2pcs.)	5.95	1.22	4.00				
49425	Wide Fixed Jaw Only (1pc.)	5.95	1.22		2.50			
49450	Extra Tall Machinable Soft Jaw Set (3pcs.)	3.95	2.00	5.00	2.50	1.70		
49451*	Pair of Tall Moveable Jaws Only (2pcs.)	3.95	2.00	5.00				
49452	Tall Fixed Jaw Only (1pc.)	3.95	2.00		2.50			
49426	Hard Jaw Carrier Set [2] (3pcs.)	3.95	1.22	3.44	.96	2.88		
	[2] Steel Jaw Plates not included							
49428*	Pair of Moveable Hard Jaws Only (2pcs.)	3.95	1.22	3.44				
49427	Fixed Hard Jaw Only (1pc.)	3.95	1.22		.96			
49429	Hardened Steel Jaw Insert [3] (4pcs.)	4.00					.35	1.23
	[3] Steel Jaw Plates have black-oxide finish, and are hardened to Rc 54/58.							

[1] Mounted Dimensions

Jaws for 6" (150mm) Production Vises

Part Number	Description	A	B	C	D	E [1]	F	G
49430	Standard Machinable Soft Jaw Set (3pcs.)	5.95	1.45	5.00	3.00	3.50		
49431*	Pair of Std Moveable Jaws Only (2pcs.)	5.95	1.45	5.00				
49432	Std Fixed Jaw Only (1pc.)	5.95	1.45		3.00			
49433	Extra Wide Machinable Soft Jaw Set (3pcs.)	7.95	1.45	5.00	3.00	3.50		
49434*	Pair of Wide Moveable Jaws Only (2pcs.)	7.95	1.45	5.00				
49435	Wide Fixed Jaw Only (1pc.)	7.95	1.45		3.00			
49455	Extra Tall Machinable Soft Jaw Set (3pcs.)	5.95	2.50	6.00	3.00	3.00		
49453*	Pair of Tall Moveable Jaws Only (2pcs.)	5.95	2.50	6.00				
49454	Tall Fixed Jaw Only (1pc.)	5.95	2.50		3.00			
49436	Hard Jaw Carrier Set [2] (3pcs.)	5.95	1.48	4.50	.96	4.00		
	[2] Steel Jaw Plates not included							
49438*	Pair of Moveable Hard Jaws Only (2pcs.)	5.95	1.48	4.50				
49437	Fixed Hard Jaw Only (1pc.)	5.95	1.48		.96			
49439	Hardened Steel Jaw Insert Set [3] (4pcs.)	6.00					.48	1.75
	[3] Steel Jaw Plates have black-oxide finish, and are hardened to Rc 54/58.							

[1] Mounted Dimensions

Note: Steel available for all soft jaw sets, add -S to the base part number. Example: 49420-S
*For Self Centering Vises. Moveable jaw sets available with gibs for tighter tolerances within rails. Add "SC" to part number. Example: 49421SC

Production Vise Accessories

Jaws & Fixture Plates

Jaws

- **Standard** fully machinable soft jaws, as supplied on the Production Vises and Columns
- **Extra Wide** fully machinable soft jaws. (-W)
- **Extra Tall** fully machinable soft jaws. (-T)
- **Hard Jaw Carriers** are drilled and tapped to accept hard jaw plates. (-H)
- **Hard Jaw Plates** are hardened steel plates that bolt onto the hard jaw carriers. (-H)

Jaws are offered three ways:

- **Jaw Sets** include two moveable jaws and one fixed jaw.
- **Moveable Jaws** are sold in pairs
- **Fixed Jaws** are sold separately.

Machinable Soft Jaws (Standard Sets included with Vises)

Hard Jaw Carriers With Steel Inserts*

Quick Change Fixture Plates

Fixture plates provide an alternative to holding parts in the jaws. Build dedicated fixtures on the plates, and then just snap onto a vise or column. Switch between jaws and fixture plates without removing the vise or column from the machine.

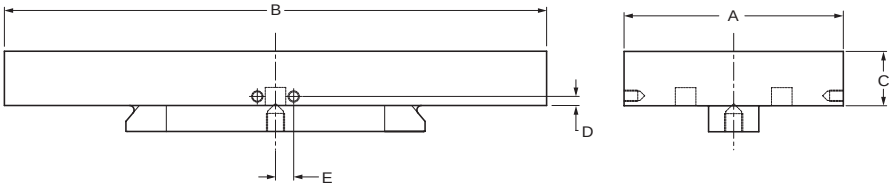

Quick Change Fixture Plate

Quick Change Fixture Plates for 4" (100mm) Production Vises

Part No.	Description	A	B	C	D	E
49446	Standard Fixture Plate	4	14.90	1.475	.25	.50
49448	Wide Fixture Plate	6	14.90	1.475	.25	.50

Quick Change Fixture Plates for 6" (150mm) Production Vises

Part No.	Description	A	B	C	D	E
49447	Standard Fixture Plate	6	19.90	1.475	.25	.688
49449	Wide Fixture Plate	8	19.90	1.475	.25	.688

Vise Handles

Part No.	Vise Size
49442	4"/100mm
49443	6"/150mm

- Ergonomic Design
- 5/8" Hex Size

Vise Work Stop

Part No.	Type
49444	Double Pivot
49459	Single Pivot

- Easily mounts to side of twin vise
- Allows for precise part location

Vise Conversion Plates

Part No.	Vise Size
49440	4"/100mm
49441	6"/150mm

NOTE: Conversion plates include mounting screws.

- Allows for easy conversion from twin station to single station vise
- Hard coat anodized aluminum

Jergens
WORKHOLDING SOLUTIONS GROUP

Production Vise Ball Lock® Accessories – Inch

Jigsaw Fixture Plate

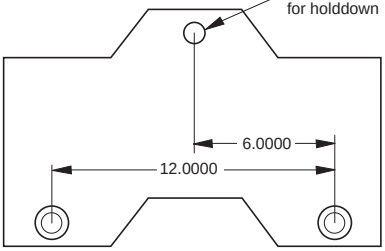

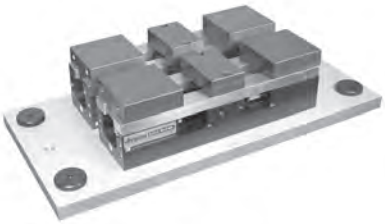

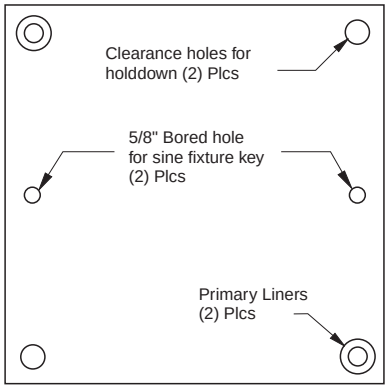

Ball Lock® Shanks

Shank Diameter	Fixture Plate Thickness	Standard Shank	Shank with Thumbscrew
20	3/4	**49601**	**49601-S**
20	1"	**49602**	**49602-S**
25	3/4	**49611**	**49611-S**
25	1"	**49612**	**49612-S**

Standard Shank

Thumb Screw

Jigsaw Interlocking Fixture Plates

Plate Part No.	Jig Saw Pattern	Plate Thickness	Outer Dimensions	Use With Vise No.	Wt. (lbs)
28705	6 x 12	3/4	8 x 15	**49401**	9
28706	8 x 12	3/4	10 x 16	**49402**	9

Ball Lock® Fixture Plates for Multiple Production Vises

Jergens manufactures standard Ball Lock® Fixture Plates for various applications. A small sample is listed below. These fixture plates will accept multiple Jergens Production Vises. However, the Jergens Ball Lock® Mounting System can provide the greatest benefits, when designed for your specific applications and your machine tools. Please contact Jergens Technical Service to select the proper fixture and sub-plate for your applications.

Plate Part No.	Ball Lock® Pattern	Shank Diameter	Plate Thickness	Outer Dimensions	Vises/ Plate	Use With Vise No.	Wt. (lbs)
28713	12 x 12	20mm	3/4	14 x 14	2	**49401**	14
28715	12 x 12	20mm	3/4	16 x 16	2	**49401**	18
28727	17 x 17	25mm	1"	20 x 20	3	**49401**	38
28727	17 x 17	25mm	1"	20 x 20	2	**49402**	38
***28742**	8 x 22	25mm	1"	12 x 25	2	**49401**	28

*Fits Jergens Tooling Column 69011

Ball Lock® Sub-Plates for Ball Lock® Vises, Columns, and Fixture Plates

Jergens manufactures standard sub-plates for popular machine tools. Three standard plates are shown. These sub-plates will accept Jergens Ball Lock® Vises, Columns and Fixture Plates. Some of the sub-plates have multiple mounting patterns that will allow multiple sizes and styles of fixture plates and vises to be used on the same machine. However, the Jergens Ball Lock® Mounting System can provide the greatest benefits, when designed for your specific applications and your machine tools. Please contact Jergens Technical Service to select the proper sub-plate for your machine.

Plate Part Number	Machine Type	Table Size	Ball Lock® Pattern	Applications
49102	HMC	400mm	14x14	Vise Columns, Tooling Columns, Other
49103-C	HMC	500mm	17x17&14x14	Vise Columns, Tooling Columns, Other
49112	VMC	20x40	Multiple Patterns	Jigsaw Vises & Plates, Multiple Vise Fixtures, Other

Production Vise Ball Lock® Accessories – Metric

Jigsaw Fixture Plate

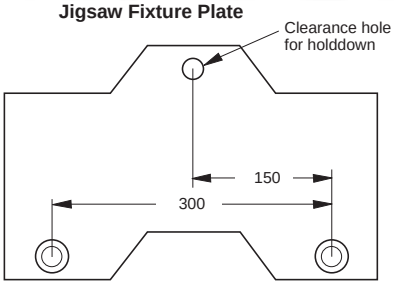

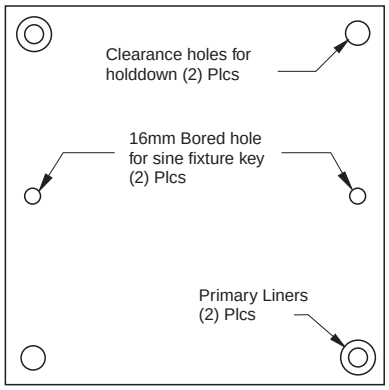

Ball Lock® Shanks

Shank Diameter	Fixture Plate Thickness	Standard Shank	Shank with Thumbscrew
20	20	**49651**	**49651-S**
20	25	**49652**	**49652-S**
25	20	**49661**	**49661-S**
25	25	**49662**	**49662-S**

Standard Shank — Thumb Screw

Jigsaw Interlocking Fixture Plates

Plate Part No.	Jig Saw Pattern	Plate Thickness	Outer Dimensions	Use With Vise No.	Wt. (Kg)
58706	200 x 300	20	250 x 400	**49402**	4

Ball Lock® Fixture Plates for Multiple Production Vises

Jergens manufactures standard Ball Lock® Fixture Plates for various applications. A small sample is listed below. These fixture plates will accept multiple Jergens Production Vises. However, the Jergens Ball Lock® Mounting System can provide the greatest benefits, when designed for your specific applications and your machine tools. Please contact Jergens Technical Service to select the proper fixture and sub-plate for your applications.

Plate Part No.	Ball Lock® Pattern	Shank Diameter	Plate Thickness	Outer Dimensions	Vises/ Plate	Use With Vise No.	Wt. (Kg)
58713	300 x 300	20mm	20	350 x 350	2	**49401**	6
58715	300 x 300	20mm	20	400 x 400	2	**49401**	8
58727	425 x 425	25mm	25	500 x 500	3	**49401**	18
58727	425 x 425	25mm	25	500 x 500	2	**49402**	18
58742	175 x 550	25mm	25	300 x 625	2	**49401**	12

Ball Lock® Sub-Plates for Ball Lock® Vises, Columns, and Fixture Plates

Jergens manufactures standard sub-plates for popular machine tools. Three standard plates are shown. These sub-plates will accept Jergens Ball Lock® Vises, Columns and Fixture Plates. Some of the sub-plates have multiple mounting patterns that will allow multiple sizes and styles of fixture plates and vises to be used on the same machine. However, the Jergens Ball Lock® Mounting System can provide the greatest benefits, when designed for your specific applications and your machine tools. Please contact Jergens Technical Service to select the proper sub-plate for your machine.

Plate Part Number	Machine Type	Table Size	Ball Lock® Pattern	Applications
59102	HMC	400mm	350 x 350	Vise Columns, Tooling Columns, Other
59103-C	HMC	500mm	350 x 350 425 x 425	Vise Columns, Tooling Columns, Other
59112	VMC	500 x 1000	Multiple Patterns	Jigsaw Vises & Plates, Multiple Vise Fixtures, Other

Jergens
WORKHOLDING SOLUTIONS GROUP

Production Vise Accessories

Sine Fixture Keys for Vises

Locate subplates or fixture plates to T-slotted machine tables. Available in inch sizes for 1/2" to 7/8" slots, and in metric sizes for 12mm to 22mm slots.

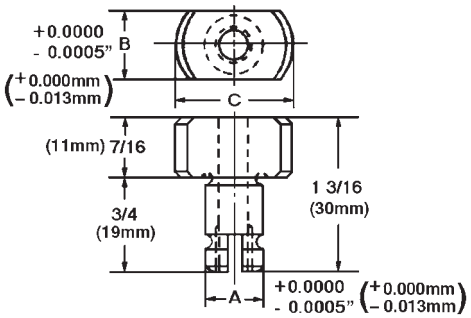

Inch – 5/8" Shanks for Inch T-Slots

Part Number	Shank Size A	Table Slot Size B	C	Wt. (lbs)
39501	0.625	0.4995	1	.09
39502	0.625	0.562	1	.11
39503	0.625	0.6245	1	.11
39504	0.625	0.687	1	.11
39505	0.625	0.7495	1 1/8	.13
39506	0.625	0.812	1 1/8	.14
39507	0.625	0.8745	1 1/8	.15

Metric – 5/8" Shanks for Metric T-Slots

Part Number	Shank Size A	Table Slot Size (mm) B	C	Wt. (Kg)
39561	0.625	12	1	.04
39562	0.625	14	1	.04
39563	0.625	16	1	.05
39564	0.625	18	1 1/8	.05
39565	0.625	20	1 1/8	.06
39566	0.625	22	1 1/8	.07

Note: Complete offering of Inch/Metric Sine Fixture Keys available on page 220-221.

T-Slot Nuts

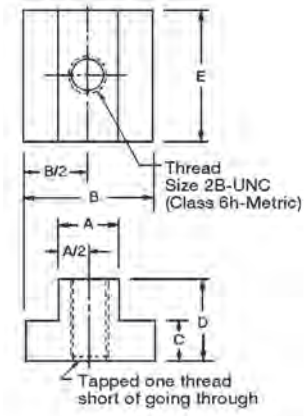

Inch

Part Number	Thread	T-Slot Width A	B	C	D	E	Wt. (lbs) 10 Pcs.
43302*	3/8-16	7/16	11/16	7/32	1/2	7/8	0.50
43303*	3/8-16	1/2	7/8	9/32	1/2	7/8	0.70
43301	3/8-16	9/16	7/8	1/4	1/2	7/8	0.70
43305*	1/2-13	9/16	7/8	11/32	5/8	1 1/8	1.20
***43306**	1/2-13	5/8	1	11/32	5/8	1 1/8	1.50
***43304**	1/2-13	11/16	1 1/8	7/16	3/4	1 1/4	2.10
43308*	5/8-11	11/16	1 1/8	7/16	3/4	1 1/4	1.14
***43309**	5/8-11	3/4	1 1/4	15/32	3/4	1 1/4	1.60
***43307**	5/8-11	13/16	1 1/4	9/16	1	1 1/2	3.11

*Conforms to TCMA. **Not Hardened

Metric

Part Number	Thread	T-Slot Width A	B	C	D	E	Wt. (Kg) 10 pcs.
43372	M10 x 1.5	12	19	7	13	25	0.25
43373	M10 x 1.5	14	22	9	16	29	0.35
43374	M10 x 1.5	16	25	9	16	29	0.35
43375	M12 x 1.75	14	22	9	16	29	0.60
43376	M12 x 1.75	16	25	9	16	29	0.75
43377	M12 x 1.75	18	29	11	19	32	1.1
43378	M16 x 2.0	18	29	11	19	32	0.57
43379	M16 x 2.0	20	32	14	25	38	0.80
43380	M16 x 2.0	22	35	14	25	38	1.56

Note: Complete offering of T-Slot Nuts available on page 264

Heavy Duty Machine Vise

Characteristics

Jergens' newest machine vise is built to be more than tough enough for your most demanding, rugged applications, while delivering exacting precision and versatility.

- Made in USA
- Single Station
- Available in 6" and 8"
- Cast Iron Base
- Soft jaws are interchangeable with common industry styles

Inch

Part Number	J01	J02	J03	J04
80075	8.000	10.750	13.500	16.250
80082	9.850	13.250	17.300	20.500

Metric

Part Number	J01	J02	J03	J04
80075	203	273	343	412
80082	250	336	439	520

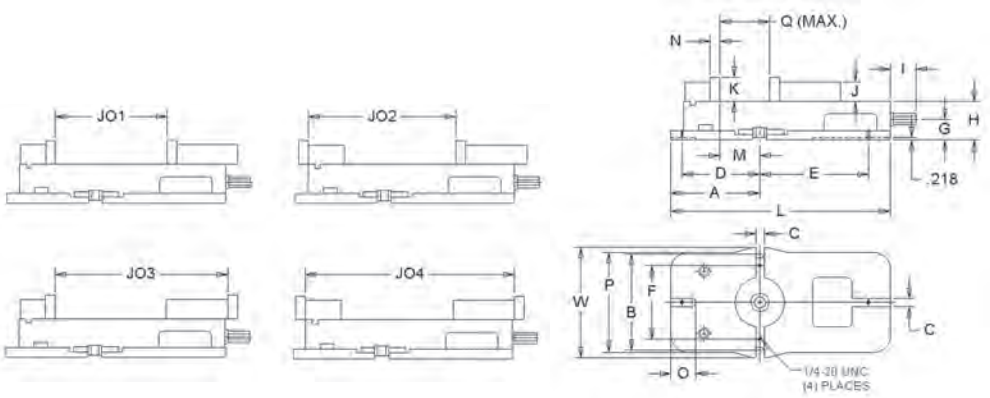

Inch

Part Number	Size	Full Opening	A	B	C	D	E	F	G	H	I	J	K	L	M	N	O	P	Q	W
80075	6	7.9375	6.78	7.652	0.688	5.97	8.345	5.5	1.54	2.875	2	1.485	1.735	16.75	3	0.725	2	8.25	7.94	9
80082	8	10	8	7	0.812	6.5	11.5	7	1.865	3.312	2.875	1.965	2.22	21.625	3.675	10.75	3.06	11	10	11.5

Metric

Part Number	Size	Full Opening	A	B	C	D	E	F	G	H	I	J	K	L	M	N	O	P	Q	W
80075	152	201	172	194	17.475	151.6	211.96	139.7	39.12	73.03	50.8	37.72	44.07	425.5	76.2	18.42	50.8	210	201	229
80082	203	254	203	178	20.625	165	292	178	47	84.1	73	49.91	56.4	549	93.35	273.1	77.7	279	254	292

Jergens BOCK BRAND
QUICK CHANGE SYSTEM

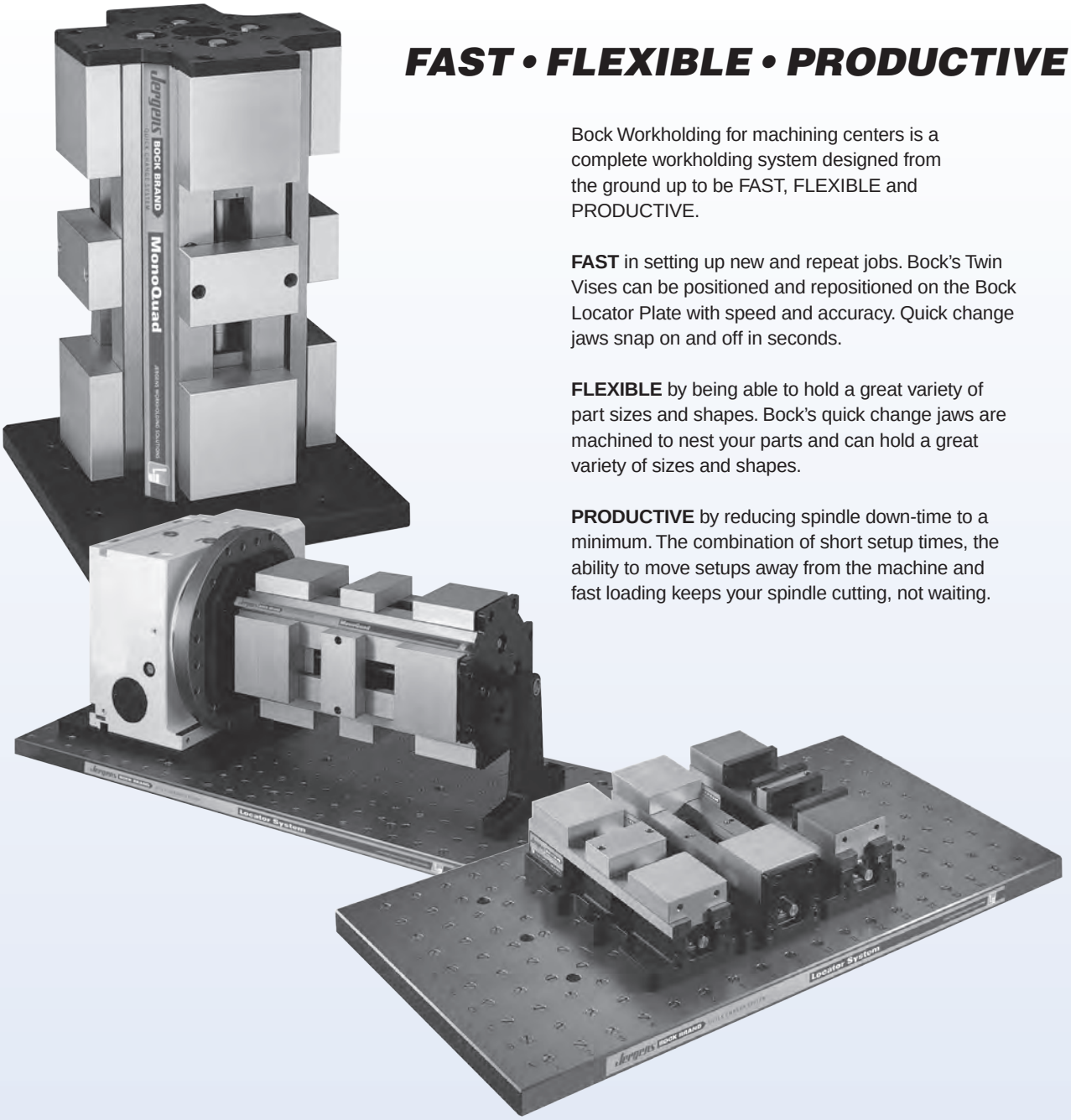

FAST • FLEXIBLE • PRODUCTIVE

Bock Workholding for machining centers is a complete workholding system designed from the ground up to be FAST, FLEXIBLE and PRODUCTIVE.

FAST in setting up new and repeat jobs. Bock's Twin Vises can be positioned and repositioned on the Bock Locator Plate with speed and accuracy. Quick change jaws snap on and off in seconds.

FLEXIBLE by being able to hold a great variety of part sizes and shapes. Bock's quick change jaws are machined to nest your parts and can hold a great variety of sizes and shapes.

PRODUCTIVE by reducing spindle down-time to a minimum. The combination of short setup times, the ability to move setups away from the machine and fast loading keeps your spindle cutting, not waiting.

System Overview

Jergens BOCK BRAND QUICK CHANGE SYSTEM

1 Bock Twin Vise System

The Bock Twin Vise is the key component of the complete Bock Workholding system. A variety of body styles made from high-strength aluminum, ground steel guides, snap-on quick-change machinable aluminum jaws and a solid clamping screw and third hand mechanism combine for fast, flexible and productive milling.

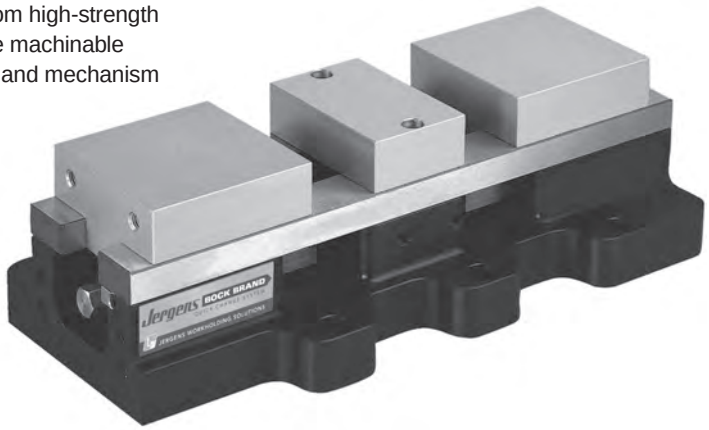

2 DexLoc™ Locator Pins

Patented DexLoc™ double-expanding locator pins allow for fast and accurate location of twin vises on locator plates.

3 Bock Locator Plate System

Bock Locator Plates are a great platform to quickly and accurately mount your Twin Vises in a number of different positions. Locator/mounting holes with alpha-numeric identifiers and Bock's DexLoc™ double-expanding locators give you +/- .0005" repeatability.

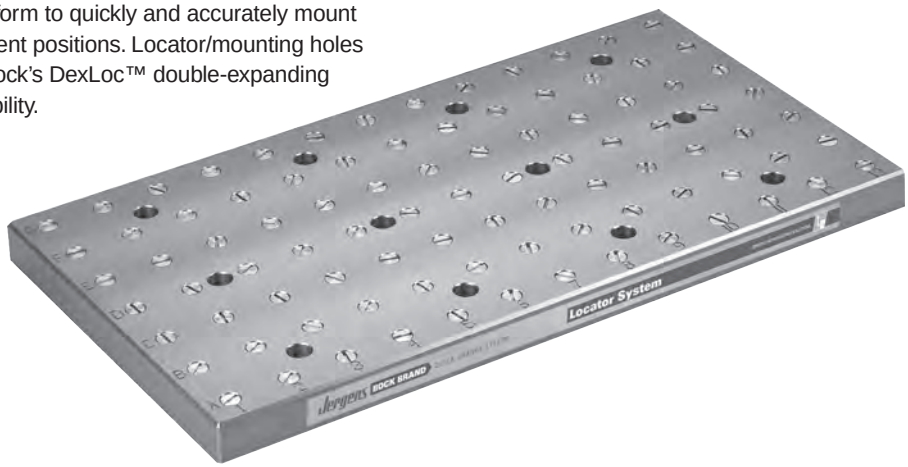

4 Bock Jaw System

An assortment of snap-on jaws and face plates gives you the ability to hold most parts.

Jergens BOCK BRAND QUICK CHANGE SYSTEM

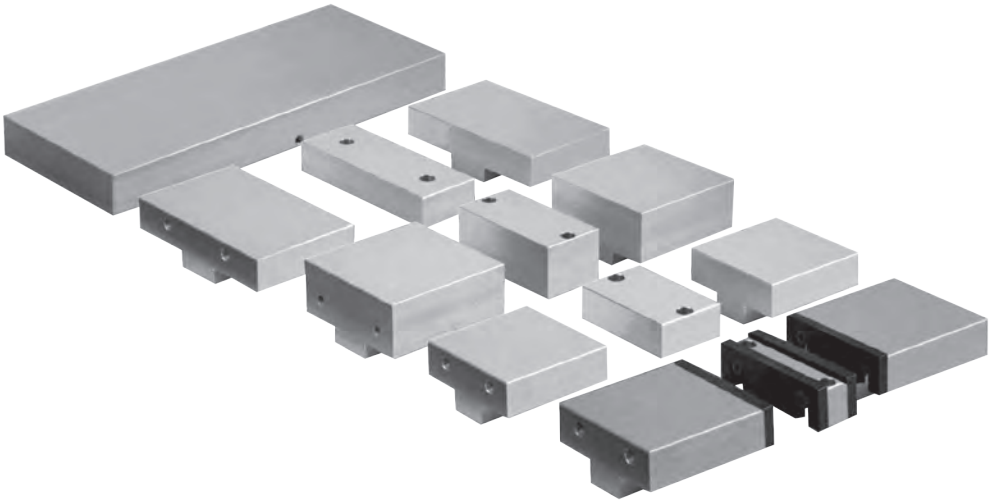

5 Bock Mono-Quad System

Bock Mono-Quad vises are the extension of the Bock System for horizontal machining centers.
Available in models that can hold 6, 8, 12 and 16 parts in one clamping to give you maximum productivity.

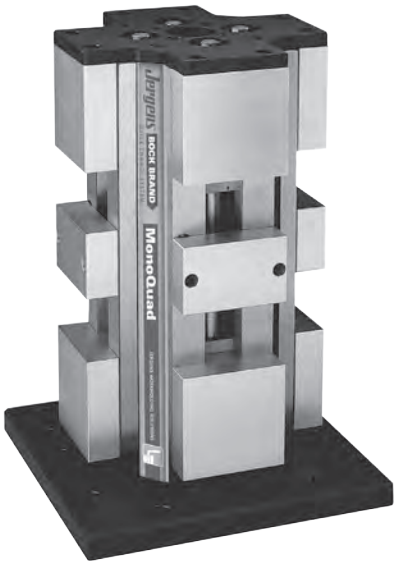

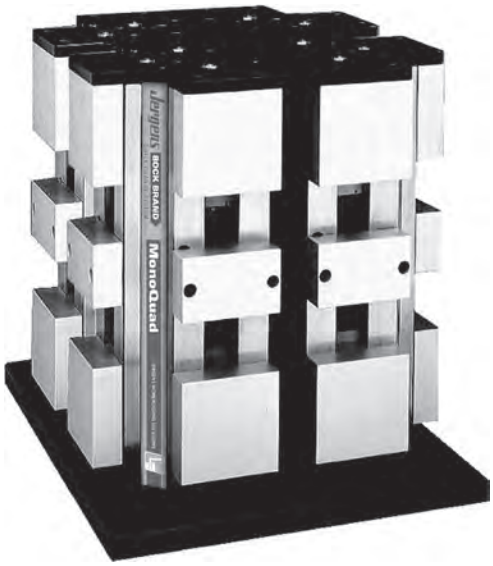

Bock Twin Vise System

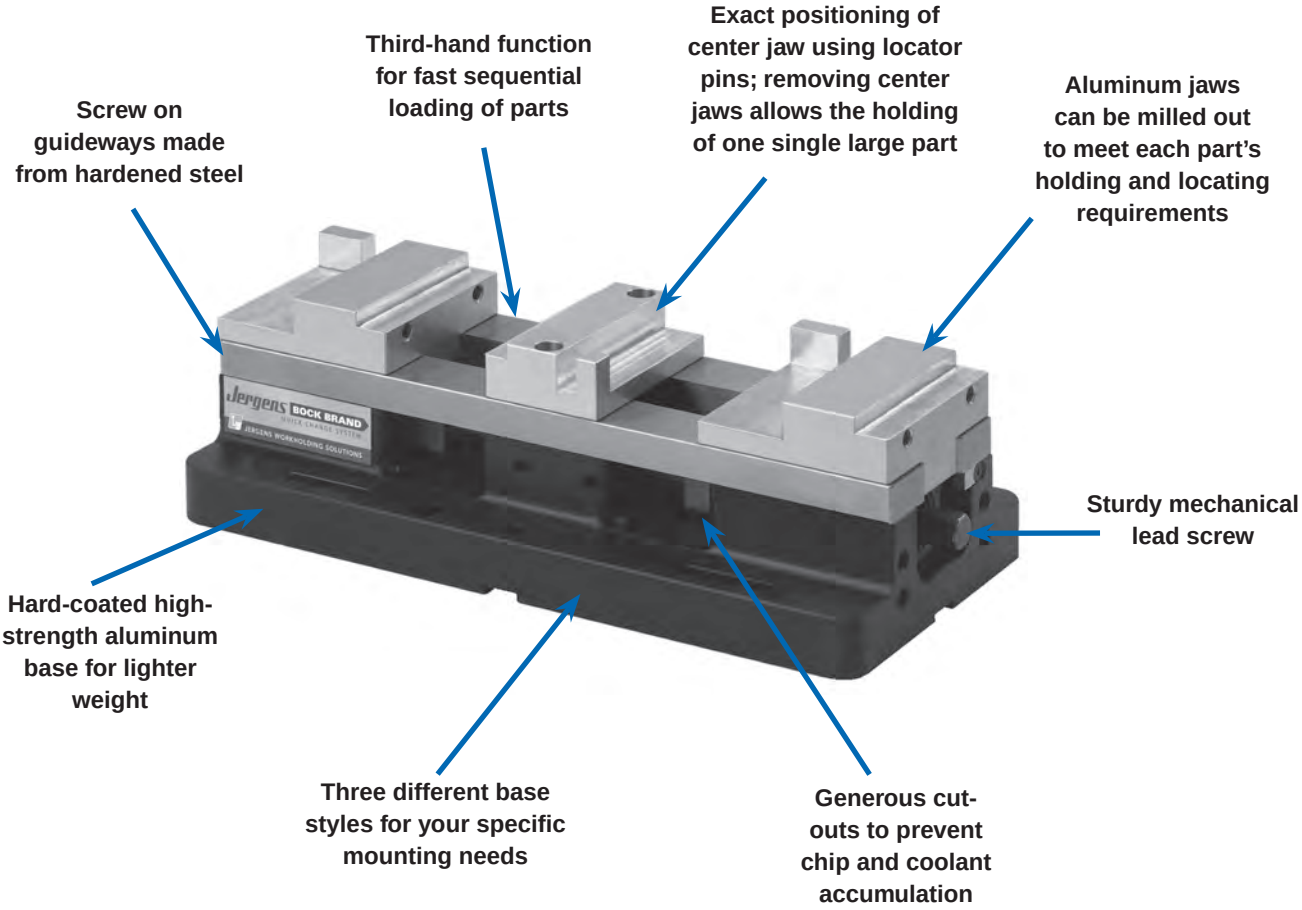

Bock's Twin Vises are available in 100mm (4") and 150mm (6") models, with three different base types:

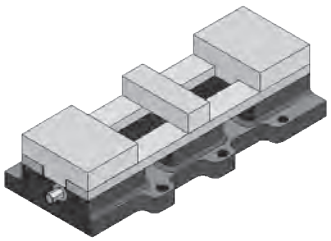

Standard interlocking base for fast mounting on Bock Locator Plates

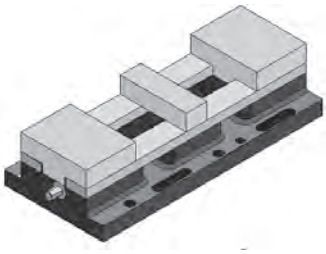

Straight base for use on Bock Locator Plates or with toe clamps

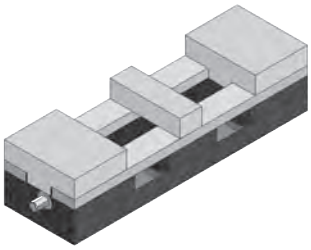

Slim-Line for high density mounting on Bock Locator Plates

Bock Jaw System

Jergens BOCK BRAND QUICK CHANGE SYSTEM

Bock Machinable Jaws are made from high-strength aircraft grade anodized aluminum.
Once machined to hold a specific part they become quick-change dedicated fixtures ideal for holding even complex shapes.

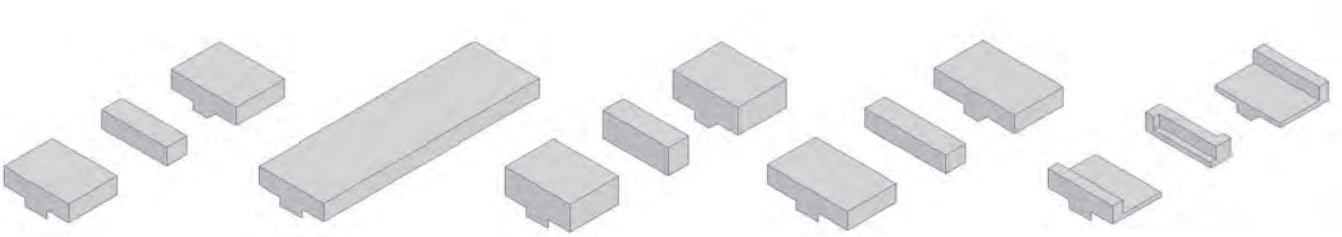

STANDARD JAWS snap on and off in seconds and can be machined to nest most any part.

QUICK CHANGE FACE PLATES can be converted to snap-on snap-off fixtures holding many small parts.

TALL JAWS to hold larger parts.

WIDE JAWS to hold several smaller parts or wide parts.

UNIQUE SNAP-ON MECHANISM holds the jaws from below the bed and allows the industry's most generous machining area.

To order jaws, please refer to page 109.

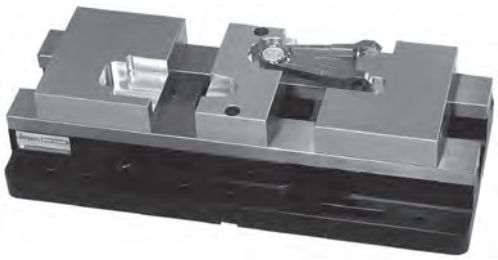

Bock Twin Vises

Jergens BOCK BRAND QUICK CHANGE SYSTEM

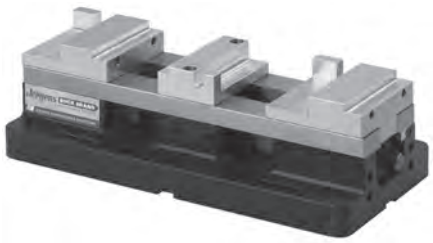

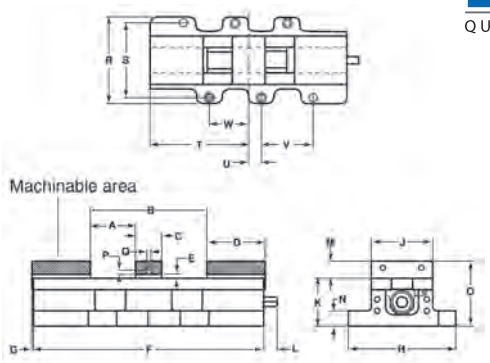

- Screw-on guideways made from hardened steel
- Third-hand function for fast sequential loading of parts
- Exact positioning of center jaw using locator pins; removing center jaws allows the holding of one single large part
- Aluminum jaws can be milled out to meet each part's holding and locating requirements.
- Sturdy mechanical lead screw
- Generous cut-outs to prevent chip and coolant accumulation
- Three different base styles
- Hard-coated, high-strength, lighter weight aluminum base

Dimensions and Capacities – Soft Jaw

Dimensions	TV4S in	TV100S mm	TV6S in	TV150S mm
A Jaw Capacity*	2.20	56	3.50	89
B Single Station Capacity*	7.00	178	10.00	254
C Fixed Jaw Width	2.50	64	3.00	76
D Jaw Carrier Length	4.00	102	5.00	127
E Jaw Plate Thickness	0.25	6	0.25	6
F Base Length	15.00	381	20.00	508
G Jaw Overhang	0.10	3	—	—
H Base Width	7.00	177	9.00	227
O Base Height	4.63	118	4.88	124
J Jaw Width	4.00	102	6.00	152
K Height Base to Rail	3.37	86	3.37	86
L Lead Screw	0.80 max	20 max	0.80 max	20 max
M Height	1.25	32	1.50	38
N Base Flange Thickness	1.25	32	1.25	32
P Non Machineable Area	0.81	21	1.00	25
Q Non Machineable Area	0.50	13	0.60	15
R Base Width	7.00	177	9.00	227
S Center Distance	6.00	150	8.00	200
T Center Line to End	7.50	191	10.00	254
U Center to Bolt Hole	1.00	25	1.00	25
V Center Bolt/dowel	4.00	100	2.00	50
W Center Line to bolt hole	3.00	75	2.00	50
Weight	30 lbs	14 Kg	65 lbs	30 Kg

* unmachined jaw capacity

Base Types:

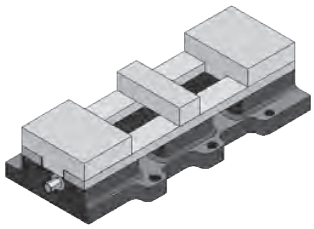

Standard Interlocking

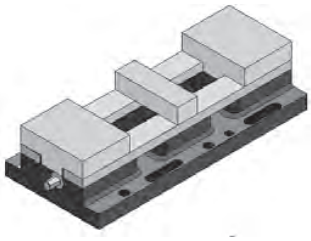

Straight Base

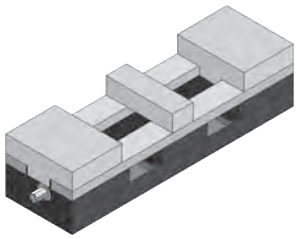

Slim-Line

Bock Brand Locator Plate System

Jergens BOCK BRAND QUICK CHANGE SYSTEM

Bock Locator Plates give you the ability to mount and locate Bock Twin Vises, and to change their size, type, number and position in minutes. Using Bock's DexLoc™ Double-Expanding Locator Pins gives you repeatability of +/- .0005".

Bock Locator Plates are made from precision machined aluminum or steel with a grid of locating/mounting holes. Each hole is identified by a letter and a number.

Bock Twin Vises with standard interlocking base gives you great flexibility at tremendous setup speeds while Bock SlimLine Twin Vises give you the possibility to mount vises very close to each other for maximum number of parts in the machine.

Each Locator Plate is custom-made for your particular application. Need a prompt quote? Call (877) 426-2504 with your specifications.

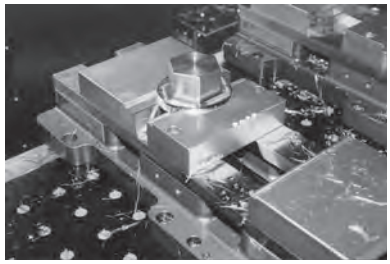

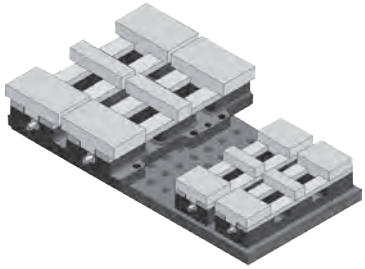

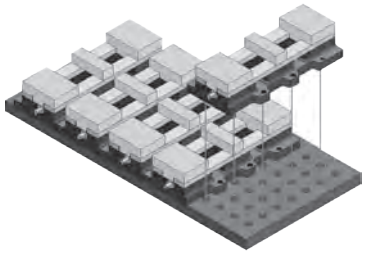

Bock Brand Locator Plates

- Repeat setups to within +/- .001"
- Locator Plates are available in a wide array of sizes, both in inch and metric dimensions.
- Jergens Bock Brand Locator Plates are made of hard coated aluminum for a durable surface
- Alpha-numeric coded holes for an accurate and repeatable baseline reference
- Every hole precision bored to fit Dex-Loc™ locating pins and threaded through for maximum versatility
- Brass protection plugs included for every hole
- Eliminate time consuming "dialing in" for every setup

Part Number	Compatible Machine	Thickness (in)	Size (in)	Material
933804	HAAS VF-2	1.42	14 x 36	Aluminum
933956	Robodrill	1.42	15.35 x 27.5	Aluminum
934204	Mazak VTC200B	1.42	20 x 57.5	Aluminum
934340	HAAS VE-2YT	1.42	18 x 36	Aluminum

DexLoc™ Locator Pins

Patented DexLoc™ double-expanding locator pins allow for fast and accurate location of twin vises on locator plates.

- Self-centering pins relocate within +/- .0005"
- Available in a wide variety of standard sizes and materials

To order DexLoc™ Locator Pins in other sizes, please refer to page 209.

Standard

Part Number	Diameter	Height	Hex Key Size (in) Top	Hex Key Size (in) Bottom
29404	5/8	1-1/4	7/32	3/16

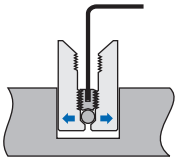

Metric

Part Number	Diameter	Height	Hex Key Size (mm) Top	Hex Key Size (mm) Bottom
29454	16	32	6	5

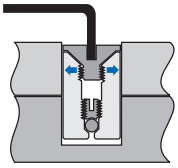

Bock Mono-Quad System

This complete range of Mono-Quad vises are designed to hold a multitude of parts and give access to several part sides in one clamping – a tremendous productivity booster on your horizontal machining center or on an indexer.

Hold 6 parts with 240°, 8 parts with 180°, 12 parts with 120°, or 16 with 90° tool access.

Mono-Quad vises are made with a high-strength aluminum column and use the same steel guides, screw mechanism and jaws as Bock's Twin Vises.

Available in 100mm (4") and 150mm (6") models and with custom base plates to fit your machine's pallet.

To order, please refer to pages 88–94.

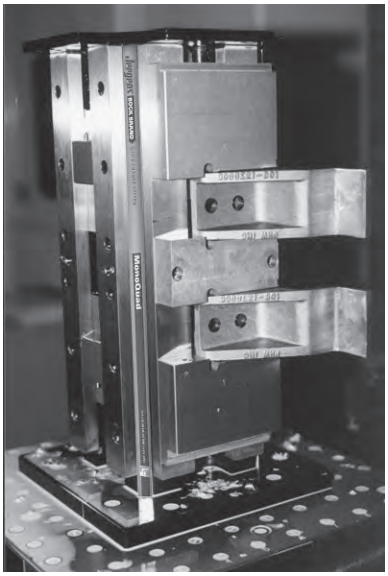

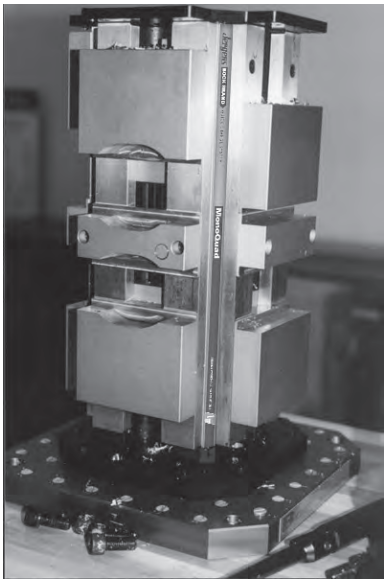

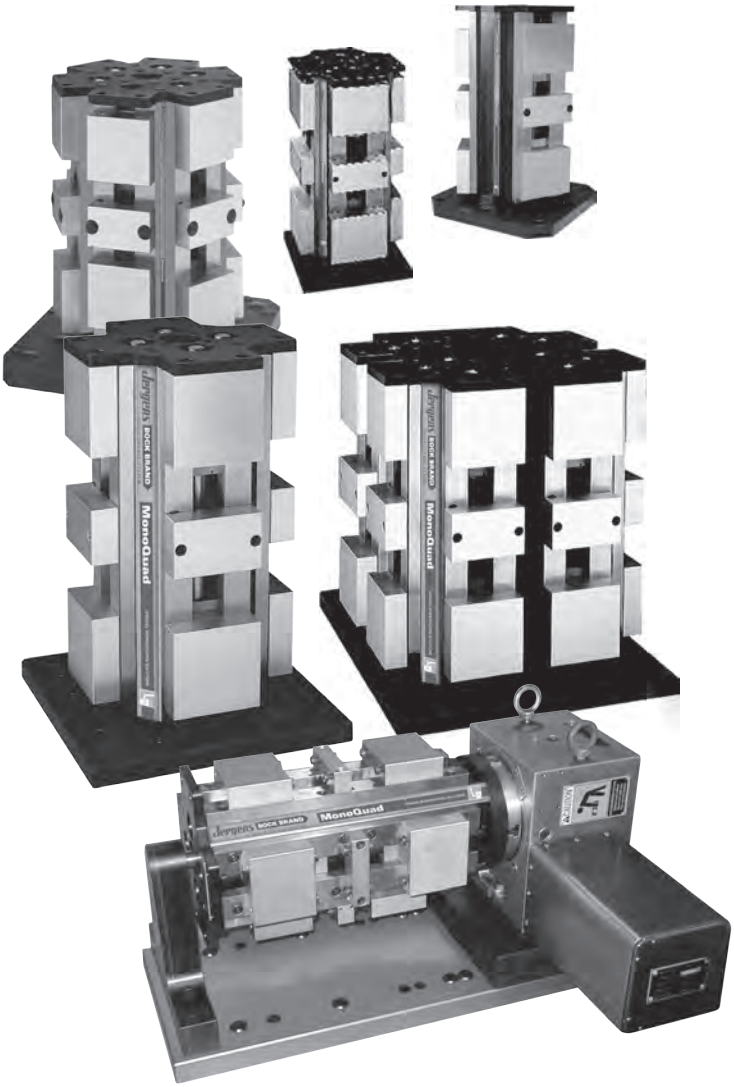

Jergens 5 AXIS WORKHOLDING SOLUTIONS

5-Axis Machining Designed to Improve Productivity by Providing:

- High Clamping Force
- Accurate Repeatability
- Fast Set-Up and Changeovers
- High Productivity Capacity
- For Complex Components/Materials

5-Axis Workholding Solutions

5-Axis Self Centering Vises

This series is suitable for many clamping tasks on 5-Axis machining centers and pallet systems. Whether the workpieces are angular or round, the concentric clamping system provides the same zero position.

The compact design, high stability and versatile selection of jaws (grip jaws, plain jaws, soft jaws, pendulum jaws, V-Type jaws) are additional features tailored for 5-Axis machining.

The 40, 60,100 and 125 clamping systems are suitable for I.D. to O.D. clamping.

- Designed for 5-Axis machining
- Free access to the workpiece, allowing the use of short standard tools
- Simple, robust construction, smooth surfaces for easy cleaning
- Also suitable as a module for standard devices
- Comprehensive jaw selection

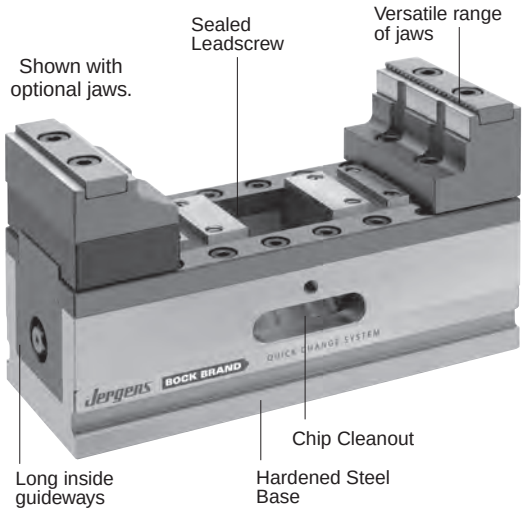

Customized design for positioning and fastening in the base on request.

Part Number	Size	Clamping Force‡ (kN/Torque Nm)	Weight (Kg)	Dimensions (mm)												Hex (mm)
				L	W	H**	d1*	g	g1	g2	h1**	h2	l1*	l2	l3	
81600	40mm	7.5 / 23	2.0	100	40	53	6H7 x8	–	–	M6 x 8	–	–	80	40.0	30	13 Male
80000	60mm	15 / 50	3.8	170	60	70	10F7	–	M10 x 11	M8 x 12	–	12	100	36.0	42	12 Male
80100	100mm	25 / 80	18.0	260	100	100	25 x 5/ M10 x 14	M8 x 11	–	M10 x 14	–	14	200	80.0	70	14 Male
80200	125mm	35 / 200	49.0	465	125	130	25 x 5/ M10 x 14	M12 x 16	–	M12 x 16	98	27	200	82.5	66	19 Male

Note: Vise handles included with each Jergens 5-Axis Vise

‡ kN x 224.8=pound - force Nm x 8.85=in. lbs Kg x 2.205=lbs Bar x 14.5=psi

* Tolerance ±0.01mm
** Tolerance ±0.02mm

40mm

Supplied with jaws.

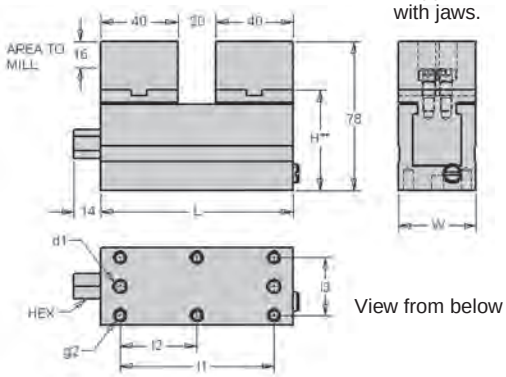

60mm

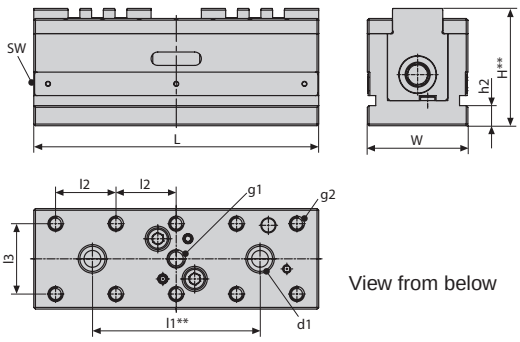

100mm

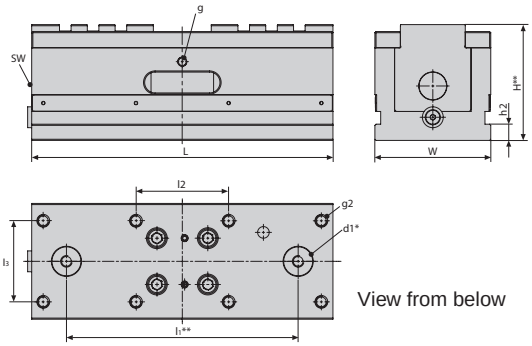

125mm

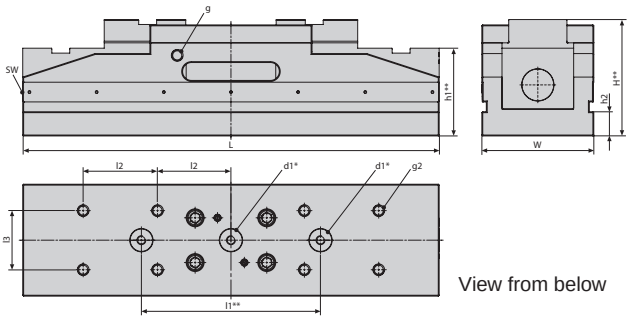

5-Axis Self Centering Jaws

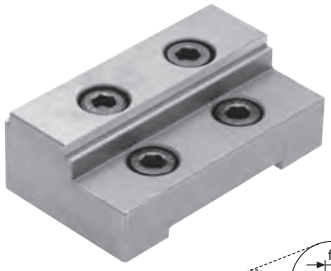

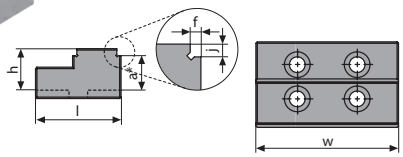

Reversible step jaw, 2 steps, hardened

Part Number	Vise(s)	Dimensions (mm)						Clamping Range min./max. (mm)
		l	w	h	a*	f	j	
80010	80000	49	60	23	18	3	5	6 – 150
80110	80100	60	100	30	25	3	5	6 – 204

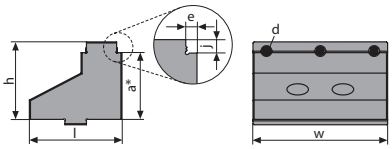

Reversible step jaw with interchangeable grip insert

Part Number	Vise	Dimensions (mm)							Clamping Range min./max. (mm)
		l	w	h	a*	d	e	j	
80210	80200	86	125	72	62	6x d10	5	10	10 – 400

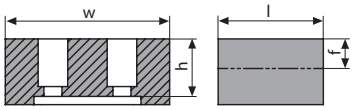

Soft jaw for milling workpiece contours

Part Number	Vise(s)	Dimensions (mm)				
		l	w	h	f	Material
80015	80000	42	60	25	8	Steel
80115	80100	64	100	35	18	Steel
80215	80200	88	125	55	32	Steel
80013	80000	53	60	22	8	Aluminum

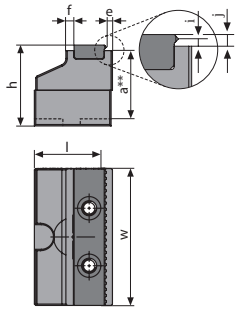

Pendulum jaw with interchangeable insert, hardened

For safe clamping of one workpiece with non-parallel clamping surfaces or two workpieces with different tolerances.

Part Number	Vise(s)	Dimensions (mm)								Clamping Range min./max. (mm)
		l	w	h	a**	e	f	i	j	
80120	80100	56	100	54	50	4.5	6	2.5	4	12 – 204
80220	80200	88	125	66	62	4.5	6	2.5	4	12 – 400

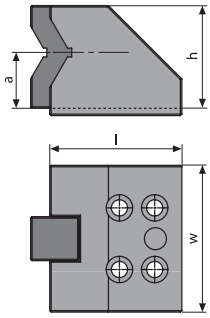

V-Type jaw with clamping inserts

Part Number	Vise(s)	Dimensions (mm)				Clamping Range min./max. (mm)
		l	w	h	a	
80030	80000	60	60	70	40	D10-76 (1)
80130	80100	64	100	70	38	D12-80 (2)

(1) = D10 – 20, D20 – 58, D58 – 76
(2) = D12 – 26, D25 – 54, D53 – 80

* Tolerance ±0.01mm
** Tolerance ±0.02mm

5-Axis Self Centering Step Jaws

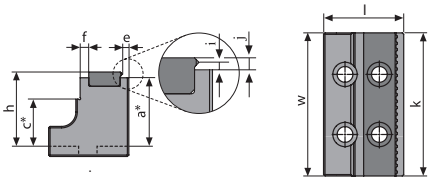

Step Jaw with Hardened Jaw Insert (Wide)

Part Number	Vise(s)	Dimensions (mm)										Clamping Range min./max.
		l	w	h	a*	c*	e	f	i	j	k	
80035	80000	56	60	34	30		4.5	6	2.5	4	60	12 – 126
80135	80100 / 80900	56	100	54	50	35	4.5	6	2.5	4	100	12 – 204
80235	80200	88	125	66	62	42	4.5	6	2.5	4	125	12 – 400

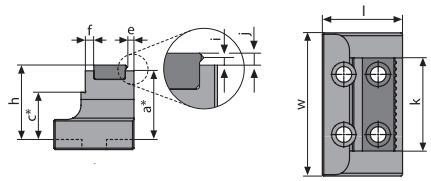

Step Jaw with Hardened Jaw Insert (Medium)

Part Number	Vise(s)	Dimensions (mm)										Clamping Range min./max.
		l	w	h	a*	c*	e	f	i	j	k	
80040	80000	56	60	34	30		4.5	6	2.5	4	35	12 – 126
80140	80100 / 80900	56	100	54	50	35	4.5	6	2.5	4	65	12 – 204
80240	80200	88	125	66	62	42	4.5	6	2.5	4	80	12 – 400

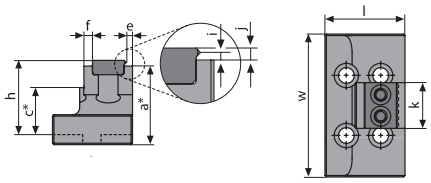

Step Jaw with Hardened Jaw Insert (Narrow)

Part Number	Vise(s)	Dimensions (mm)										Clamping Range min./max.
		l	w	h	a*	c*	e	f	i	j	k	
80145	80100 / 80900	56	100	54	50	35	4.5	6	2.5	4	32	12 – 204

* Tolerance ±0.01mm

5-Axis Self Centering Accessories

Positioning Pins, Various Diameters, for Grid Plate, set of 2

Part Number	Vise(s)	Ø (mm)
80060	80000	10/12
80160	80100 / 80200	25/12
80165	80100 / 80200	25/16

Positioning Pins, Various Diameters, for Table with T-Slots, Set of 2

Part Number	Vise(s)	Ø (mm)
80065	80000	10/14
80260	80100 / 80200	25/14
80265	80100 / 80200	25/18

Torque wrench

Part Number	Vise(s)	Torque (Nm)
80070	80000	5 – 60
80170	80100	20 – 120
80270	80200	40 – 200

Socket

Part Number	Vise(s)	Torque (Nm)
80071	80000	12
80171	80100	14
80271	80200	19

Clamping Claws, Set of 4, Including Screws

Part Number	Vise(s)	Torque (Nm)
80050	80000	M10
80053	80000	M12
80150	80100	M12
80250	80200	M12
80253	80200	M16

Jergens 5-Axis Fixed Jaw Vise

Designed especially for multi-face machining with a single clamping operation. Ideal for machining complicated workpieces in a single clamping operation, such as in mold making. These vises are small, but have a large holding capacity. A variety of jaw options increase the range of applications. Grip jaws and V-type jaws enhance the retention force of the workpiece. The hydraulic version provides automatic power clamping with exact force.

- Designed for 5-Axis machining
- Free access to the workpiece, allowing the use of short standard tools
- Simple and robust construction, smooth surfaces, easy cleaning
- Also suitable as a module for standard devices
- Comprehensive jaw selection

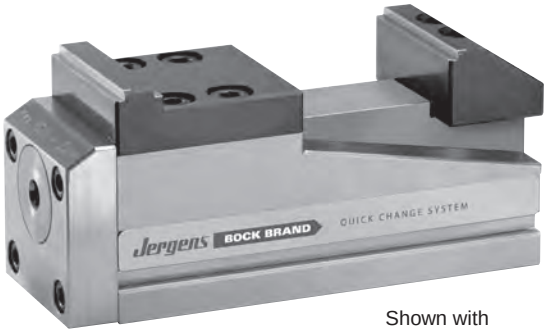

Shown with optional jaws.

Part Number	Size	Clamping Force⁑ (kN/Torque Nm)	Weight (Kg)	Dimensions (mm)													Hex (mm)
				Stroke	L	W	H**	d1	g	g1	g2	h2	l1**	l2	l3	14*	
80300	40mm	8.0 / 15 Nm	1.3	–	117	40	44	6H7	M5 x 6	–	M6 x 7	–	80	40	30	10	6 Female
80400	60mm	15.0 / 25 Nm	3.3	–	168	60	57	10F7	M6 x 10	M10 x 11	M8 x 12	12	100	36	42	17	8 Female
80500	60mm Hyd	15.0 / 260 bar	3.8	4	185	60	57	10F7	M6 x 10	M10 x 11	M8 x 12	12	100	36	42	17	8 Female

Note: Vise handles included with each Jergens 5-Axis Vise

⁑ kN x 224.8=pound - force Nm x 8.85=in. lbs Kg x 2.205=lbs Bar x 14.5=psi

* Tolerance ±0.01mm
** Tolerance ±0.02mm

40mm

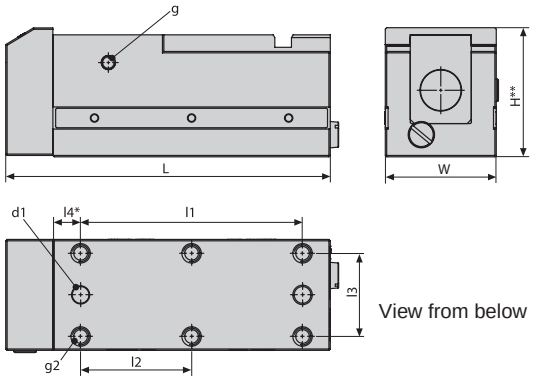

View from below

60mm / 60mm Hyd

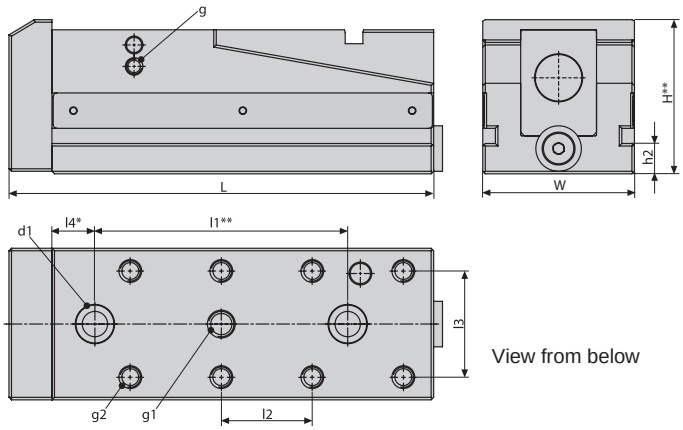

View from below

Hydraulic Drive Unit
60 HVD

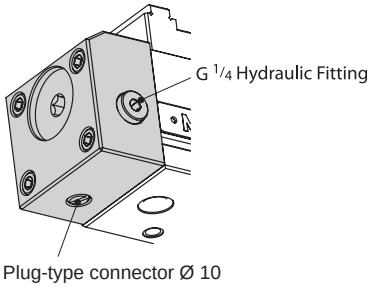

5-Axis Jaws for Fixed Jaw Vises

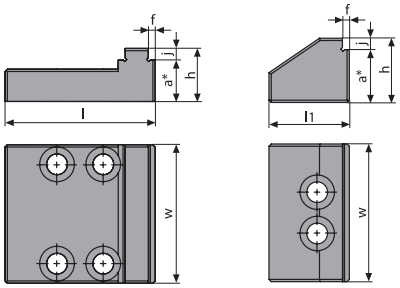

Fixed Jaw Movable Jaw

Step Jaw, Reversible

Part Number Fixed jaw	Part Number Movable jaw	Dimensions (mm)								Clamping Range min./max.
		Vise(s)	l	l1	w	h	a*	f	j	
80310	**80315**	80300	40	34	40	15	12	3	3	6 – 70
80410	**80415**	80400	65	35	60	23	18	3	5	6 – 106

l1 only for movable jaw

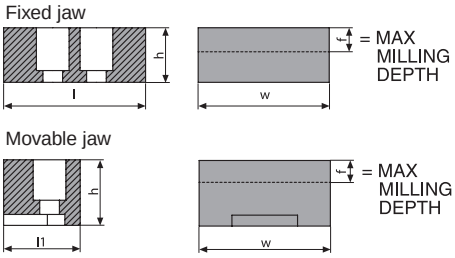

Block Jaw, Soft for Milling Workpiece Contours

Part Number Fixed jaw	Part Number Movable jaw	Dimensions (mm)					
		Vise	l	l1	w	h	f
80420	**80425**	80400	65	35	60	25	11

l1 only for movable jaw

* Tolerance ±0.01mm

5-Axis Fixed Jaw Accessories

Positioning Pins, Various Diameters, for Grid Plate, set of 2

Part Number	Vise(s)	Ø (mm)
80060	80400 / 80500	10/12

Positioning Pins, Various Diameters, for Table with T-Slots, Set of 2

Part Number	Vise(s)	Ø (mm)
80065	80400 / 80500	10/14

Torque Wrench

Part Number	Vise(s)	Torque (Nm)
80070	80300 / 80400	5 – 60

Socket

Part Number	Vise(s)	SW
80380	80300	6
80430	80400	8

Socket Wrench

Part Number	Vise	SW
80531	80500	8

Clamping Claws, set of 4, Including Screws

Part Number	Vise(s)	Thread
80050	80400 / 80500	M10
80053	80400 / 80500	M12

5-Axis Quick Clamping Block

The Jergens 5-Axis Quick Change System (QCB) is an ideal partner for the Jergens 5-Axis Clamping System. The QCB changes the workpiece position on 5-Axis machining centers. This helps reduce interference for the tool.

Rapid and precise change of clamping elements optimize efficiency. The QCB with its integral mechanical Zero-Point Clamping System provides you with the ability to increase productivity and lower costs.

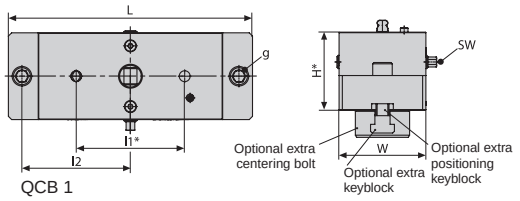

QCB 1

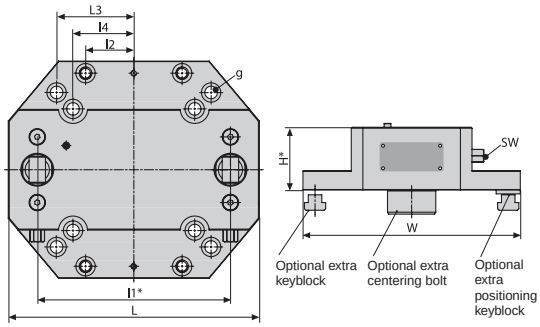

QCB 2

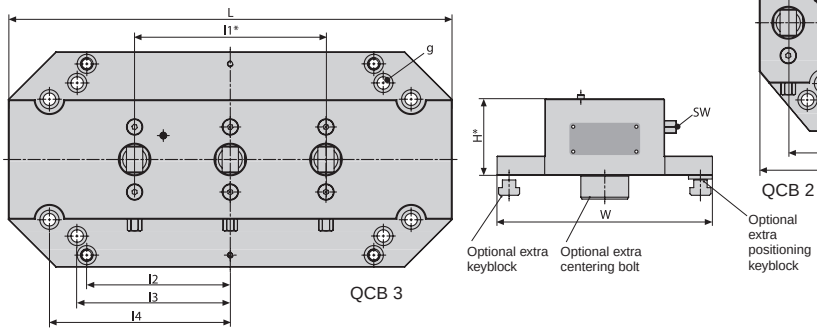

QCB 3

* Tolerance ±0.01mm

Model	Part Number	L	W	H*	g	l1*	l2	l3	l4	Socket Wrench	Feeding force (kN / Nm)	Weight (Kg)
QCB 1	**80600**	225	80	72	KM12	100	100			8	12 / 60	9
QCB 2	**80700**	260	225	65	KM12	200	50	80	63	13	2x 20 / 80	18
QCB 3	**80800**	464	225	80	KM12	200	150	160	189	13	3x 20 / 80	42

Accessories: Fastening and Positioning

Centering Bolts for QCB 1, 2, 3

Part Number	Ø mm	L
80610	D 30 g6	25 / 48
80615	D 32 g6	25 / 48
80620	D 50 g6	25 / 48
80625	D 50 g6	18 / 41

Centering Bolts, Set

Part Number	Models
80630	QCB 1 / 80000 + 81000
80710	QCB 2 / 80100 + 81100
80810	QCB 3 / 80200

Positioning Keyblock with Screw

Part Number		T-Slot (mm)
80640	DIN 6322, 1 pc.	14

Positioning pin for QCB 2, 1 pc.

Part Number		Ø (mm)
80065		10/14

Keyblock with Screws

Part Number		T-Slot (mm)
80650	DIN 508, 4 pcs.	14

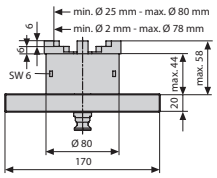

80655 Adapter Plate for QCB 1 with Self-Centering Chuck DIN 6350-1
with pull-in bolt, plate 170 x 80 mm

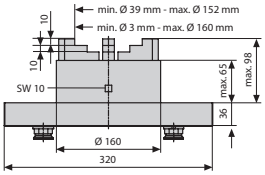

80715 Adapter Plate for QCB 2 with Self-Centering Chuck DIN 6350-1
with pull-in bolt, plate 320 x 160 mm

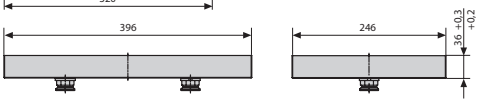

80716 Adapter Plate for QCB 2
with pull-in bolt, parallelism 0.008/100 mm
can be customized by the user

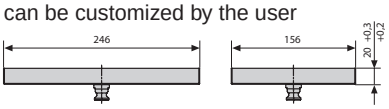

80656 Adapter Plate for QCB 1
with Pull-In Bolt, Parallelism 0.008/100 mm
can be customized by the user

5-Axis Compact Vises

New machining technologies and manufacturing methods call for the development of new solutions in clamping technology. The Jergens 5-Axis Compact Vise, with its short base and easy movement of the fixed jaw, is ideal for 5-sided machining.

The well balanced design of the guide between the base and the moveable jaw allows the use of high clamping jaws, for performing machining operations close to the workpiece.

The base is made from cast steel for rigidity and dimensional stability. All sides are hardened and ground.

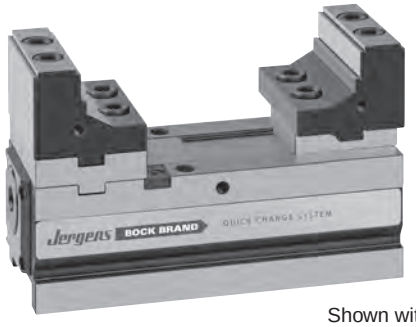

Shown with optional jaws.

Part Number	Size	Clamping Force⁑ (kN/Torque Nm)	Weight (Kg)	Dimensions (mm)												Hex (mm)
				Stroke	L	W	H*	d1*	g	g1	g2	h2	l1*	l2	l3	
81000	80mm Man	25/ 60 Nm	8.8	–	206	80	85	10F7	M6 x 10	M10 x 11	M10 x 16	18	100	60	60	12 Female
81100	120mm Man	40/100 Nm	18.4	–	260	120	100	25 x 5/ M10 x 14	M8 x 15		M12 x 18	18	200	100	80	14 Female
81200	80mm Hyd	20/310 bar	9.0	4	227	80	85	10F7	M6 x 10	M10 x 11	M10 x 16	18	100	60	60	12 Female
81300	120mm Hyd	40/270 bar	20.4	4	282	120	100	25 x 5/ M10 x 14	M8 x 15		M12 x 18	18	200	100	80	14 Female

Note: Vise handles included with each Jergens 5-Axis Vise

* Tolerance ±0.01mm

⁑ kN x 224.8=pound - force Nm x 8.85=in. lbs Kg x 2.205=lbs Bar x 14.5=psi

80mm / 80mm Hyd

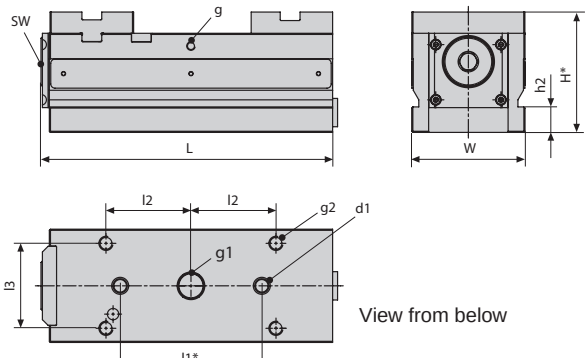

View from below

- High degree of freedom for spindle and tools; low risk of collision
- Well suited for short standard tools
- Repeatable and controllable clamping forces of up to 25 kN Compact 80 and 40 kN Compact 120
- Jaw with a special grip for maximum holding force (factor 3 as compared with standard jaw)

120mm / 120mm Hyd

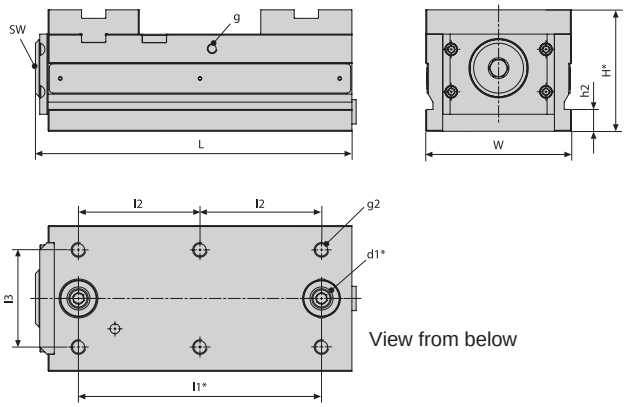

View from below

Figure:
Hydraulic drive unit
C80, C120

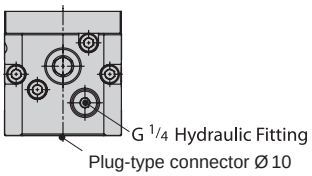

5-Axis Compact Vise Jaws

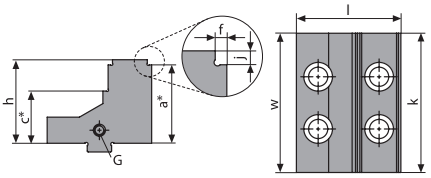

Precision Step Reversible Jaw for 81000 / 81200

Part Number	Dimensions mm									Clamping Range min./max.
	l	w	h	a*	c*	f	G	j	k	
81010	60	50	48	45	30	2.5	M6 x 10	3	25	5 – 155
81015	60	50	48	45	30	2.5	M6 x 10	3	50	5 – 155
81020	60	80	48	45	30	2.5	M6 x 10	3	80	5 – 155

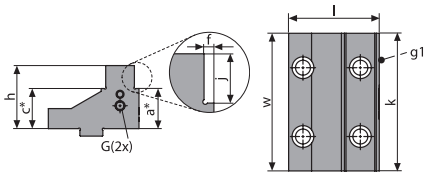

Precision Step Reversible Jaw for 81100 / 81300

Part Number	Dimensions (mm)										Clamping Range min./max.
	l	w	h	a*	c*	f	G	g1	j	k	
81110	79	84	55	35	35	4	M8 x 14	M4 x 7	20	40	8 – 200
81120	79	84	55	35	35	4	M8 x 14	M4 x 7	20	84	8 – 200
81125	79	120	55	35	35	4	M8 x 14	M4 x 7	20	120	8 – 200

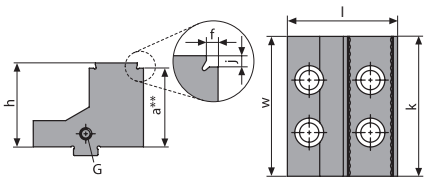

Special Grip Jaw for 81000 / 81200

Provides maximum retaining force

Part Number	Dimensions (mm)								Clamping Range min./max.
	l	w	h	a**	f	G	j	k	
81025	63	50	48	45	3.5	M6 x 10	3	25	7 – 151
81030	63	50	48	45	3.5	M6 x 10	3	50	7 – 151
81040	63	80	48	45	3.5	M6 x 10	3	80	7 – 151

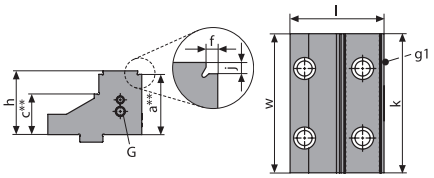

Special Grip Jaw for 81100 / 81300

Provides maximum retaining force

Part Number	Dimensions (mm)										Clamping Range min./max.
	l	w	h	a**	c**	f	G	g1	j	k	
81130	81	84	55	52	35	3.5	M8 x 14	M4 x 7	3	40	7 – 195
81135	81	84	55	52	35	3.5	M8 x 14	M4 x 7	3	84	7 – 195
81140	81	120	55	52	35	3.5	M8 x 14	M4 x 7	3	120	7 – 195

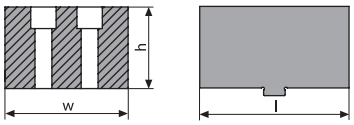

Soft Jaws

Part Number	Vise(s)	Dimensions (mm)			Material
		l	w	h	
81045	81000 / 81200	97	80	53	Steel C 45
81050	81000 / 81200	97	80	53	Aluminium
81145	81100 / 81300	97	120	53	Steel C 45
81150	81100 / 81300	97	120	53	Aluminium

* Tolerance ±0.01mm
** Tolerance ±0.02mm

5-Axis Compact Vise Accessories

Positioning Pins, Various Diameters, for Grid Plate, set of 2

Part Number	Vise(s)	Ø (mm)
80060	81000 / 81200	10/12
80160	81100 / 81300	25/12
80165	81100 / 81300	25/16

Positioning Pins, Various Diameters, for Table with T-Slots, set of 2

Part Number	Vise(s)	Ø (mm)
80065	81000 / 81200	10/14
80260	81100 / 81300	25/14
80265	81100 / 81300	25/18

Clamping Claws, set with M10 Fastening Screws

Part Number	Vise(s)	Qty.
81075	81000 / 81200	4
81180	81100 / 81300	6

Double Clamping Claws, set with M10 Fastening Screws

Part Number	Vise(s)	Qty.
81080	81000 / 81200	4
81185	81100 / 81300	6

Torque Wrench

Part Number	Vise(s)	Clamping Force (Nm)
80070	81000	5 – 60
80170	81100	20 – 120

Socket for Torque Wrench

Part Number	Vise(s)	SW
81060	81000	12, 3/8"
81160	81100	14, 1/2"

C80

C120

Workstops

Part Number	Vise(s)
81090	81000 / 81200
81195	81100 / 81300

Jergens 5-Axis Fixed Jaw Vise with Reversible and Interchangeable Inserts

With reversible (1 face flat, 1 face with grip) and interchangeable inserts, as well as round inserts (with grip), this vise allows machining of both machined and un-machined parts. Insert design minimizes change over time and an all-steel construction guarantees a long service life and high stability. With pre-drilled holes in the base for positioning and fastening, the vise is ideal for use with Jergens' Zero Point System and Ball Lock® Quick Change System.

- Suitable for clamping both un-machined and machined parts
- Interchangeable inserts allow machining of the 6th face with minimal set up
- Free access to the workpiece, allowing the use of standard tools
- Minimal clamping edge reduces material losses

Part Number	Size	Clamping Force ** (kN/Nm)	Weight (Kg)	Stroke (mm)	S	S1	L	B	H	d1	g	g2	h1	h2	l1	l2	l3	j	SW
80900	100mm	25/60	19.6	96	18-204	6-192	285	100	100	25 x 5/M10 x 14	M8 x 15	M10 x 15	50	14	200	80	70	4	12

** kN x 224.8=pound - force Nm x 8.85=in. lbs Kg x 2.205=lbs Bar x 14.5=psi

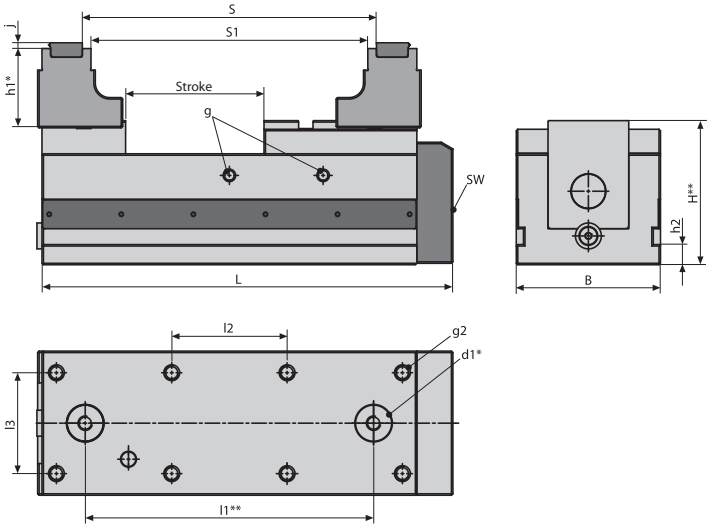

Jergens 5-Axis Fixed Jaw Vise Accessories

Clamping Claws
Set of 4 pieces, with nuts

Part Number	Vise	Thread
80150	80900	M12

Torque Wrench

Part Number	Vise	Torque (Nm)
80070	80900	5 – 60

Socket for Torque Wrench

Part Number	Vise	Width Across Flats
81060	80900	12

Workpiece Stop

Part Number	Vise
81195	80900

Jergens 5-Axis Pallet Clamps

Jergens pallet clamps (comprised of clamping jaws with a grip structure) can be used either for concentric clamping or for clamping to the fixed jaw. These pallet clamps are an effective, affordable clamping solution.

- 2 designs available: concentric clamping or clamping to a fixed jaw
- Highest quality, compact, all-steel construction
- Precise clamping
- Easy to dismantle and clean

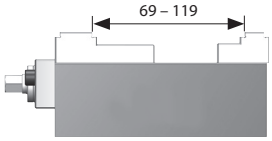

Fixed Pallet Clamp

Clamping to the fixed jaw
Clamping jaws with a grip structure

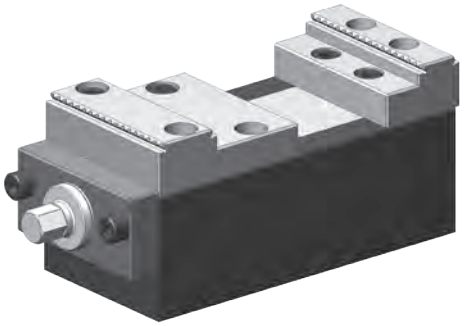

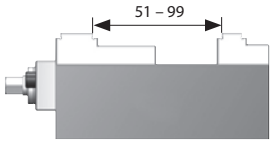

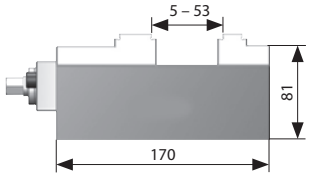

Part Number	Clamping Principle	Jaw Width (mm)	Clamping Force⁑ (kN)	Clamping Width (mm)	Clamping Step (mm)	Weight (Kg)
81400	Against the fixed jaw	80	20 at 60 Nm	5 – 119	4 x 4	6.9

⁑ kN x 224.8=pound - force Nm x 8.85=in. lbs Kg x 2.205=lbs Bar x 14.5=psi

Concentric Pallet Clamp

Concentric clamping
Clamping jaws with a grip structure

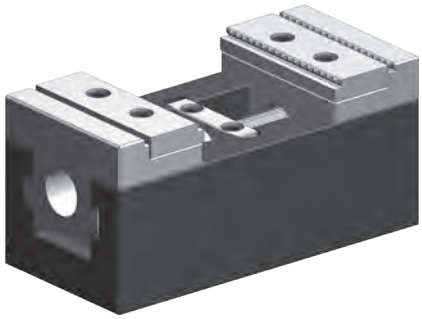

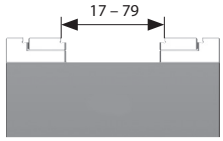

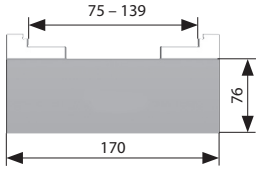

Part Number	Clamping Principle	Jaw Width (mm)	Clamping Force (kN)	Clamping Width (mm)	Clamping Step (mm)	Weight (Kg)
81500	Concentric clamping	80	20 at 60 Nm	15 – 139	4 x 4	6.4

Power Clamping

Air Circuit Controls – 2-Hand No Tie Down 191
Booster Clamping Kit..... 181
Boosters, High Pressure/Volume..... 179
Boosters Installation Kits 180
Boosters, Pre-Fill..... 176
Boosters, Pre-Fill Accessories..... 177
Boosters, Standard & Accessories 178
Clamps, Toe 144–145
Cylinders, Block 158–159
Cylinders, Double Acting 155
Cylinders, Flange Mount 160
Cylinders, Hollow Rod 148–149
Cylinders, Intensifier 161–162
Cylinders, Miniature..... 150
Cylinders, Single Acting 154
Cylinders, Swing 136–141
Cylinders, Threaded.....150–152
Fittings.....198–199
Hoses – Air & Hydraulic 200
Hydraulic Fluids 195
Hydraulic Gauges 191
Hydraulic Intensifier..... 182
Inserts, Toe..... 144
Jam Nuts..... 153
Manifolds 196
Mounting Brackets - Cylinders..... 156
Mounting Plates 143
Oil Reservoirs 195
Pallet Decoupler Valve 188
Piston Buttons..... 153
Pumps, Air – Breadbox™ 184
Pumps, Manual 187
Pumps, Shoebox™ 183
Power Pac, Pre-Fill..... 181
Quick Disconnects Air & Hydraulic 200
Repair Kits..... 201
Rotary Couplers 196
Swing Cylinder Arms..... 138
Swing Cylinder – Bottom Flange 137
Swing Cylinder – Top Flange 136
Tubing, Steel.....200
Valves, Air Circuit.....190–191
Valves, Flow Control.....189, 194
Valves, Flow Limit.....174
Work Supports 146–147
Air-Powered Hydraulic Pumps.....183–184
Block Clamp..... 172
Breadbox™ Pump 184
Proximity Switch.....168–169
Pump Kits and Accessories 183–186
Sensor Interlock..... 167
Shoebox™ Pump 183
Staylock Clamps.....164–175
Valves, Flow Limit.....174
Valves and Subplates for
Air Powered Hydraulic Pumps 186

Jergens®
MANUFACTURING EFFICIENCY

Jergens
WORKHOLDING SOLUTIONS GROUP

Swing Cylinder – Top Flange/Manifold Mount

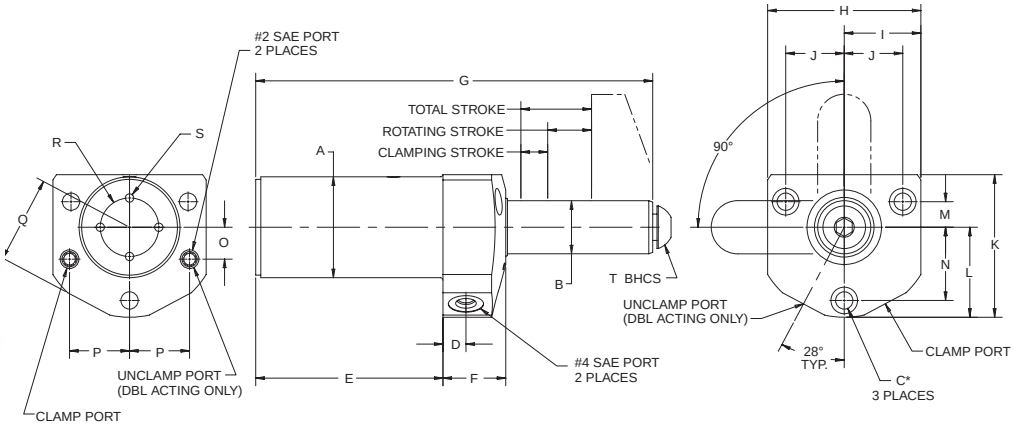

The piston rotates 90° to the right, but may be ordered with 90° left rotation (add - LH to clamp part no.) or no rotation (add - SP to clamp part no.)

- Clamping capacity from 1,100-5,000 lbs. max.
- Versatile manifold mount or conventionally plumbed
- Single and Double Acting available
- Available in three body sizes
- Assortment of Clamping Arms (sold separately) See page 138
- Popular top flange mounting design

These popular and highly adaptable swing style cylinders contain built in features, which allow users to simplify the design process. They are directly interchangeable with competitive products.

Specifications	Single Acting			Double Acting		
	60660	60662	60664	60670	60672	60674
Maximum Output Force (lbs)	1100	2600	5000	1100	2600	5000
Stroke (in) Total	.79	1.16	1.66	.76	1.16	1.66
Rotating	.48	.66	1.03	.45	.64	1.03
Clamping	.31	.50	.63	.31	.52	.63
Operating Volume Clamp (cu in)	.23	.72	1.95	.23	.72	1.98
Operating Volume Unclamp (cu in)	N/A	N/A	N/A	0.46	1.43	4.00
Minimum Operating Pressure (psi)	750	750	750	500	500	500
Maximum Operating Pressure (psi)	5000	5000	5000	5000	5000	5000
Effective Piston Area (sq in)	.30	.62	1.18	.30	.62	1.18

CAUTION! DON'T ALLOW SWING ARM TO CONTACT THE WORKPIECE OR FIXTURE WHILE ROTATING.

Part No.		*Counter Bore Size
60660	60670	1/4" S.H.C.S.
60662	60672	5/16" S.H.C.S.
60664	60674	3/8" S.H.C.S.

* Mounting Hole Counter Bore

WARNING:
All swing cylinders must be used with flow limit valves to dampen the rotating action. Please see maximum flow rate shown below. See page 142.

Top Flange Mount

Single Acting Part No.	Double Acting Part No.	A	B	D	E	F	G	H	I	J	K	L	M	N	O	P	Q	R	S	T
60660	**60670**	1.43	0.623	0.38	2.57	1.03	5.28	2.31	1.16	0.88	2.06	1.32	0.34	1.03	0.56	.845	1.23	0.66	0.136	3/8-24 x 5/8
60662	**60672**	1.75	0.874	0.41	3.35	1.06	6.78	2.69	1.35	1.00	2.53	1.63	0.44	1.25	0.53	1.05	1.53	1.00	0.196	1/2-20 x 3/4
60664	**60674**	2.37	1.247	0.54	4.40	1.48	9.33	3.60	1.80	1.38	3.35	2.12	0.60	1.72	0.75	1.41	2.04	1.38	0.196	5/8-18 x 1

Manifold Mounting Dimensions - Top Flange

Single Acting Part No.	Double Acting Part No.	A	B	C	D	E	F	G
60660	**60670**	1.476	1/4-20	0.340	1.030	0.880	0.560	0.845
60662	**60672**	1.809	5/16-18	0.440	1.250	1.000	0.530	1.050
60664	**60674**	2.433	3/8-16	0.600	1.720	1.375	0.750	1.410

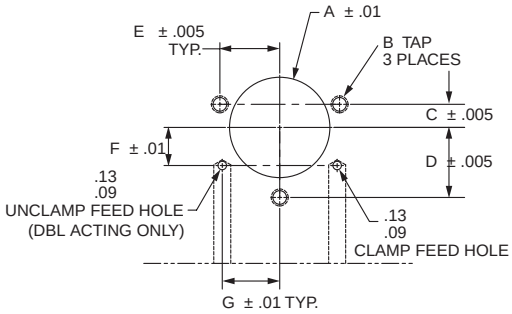

Inch to metric fittings available – see page 199.

Swing Cylinder – Bottom Flange/Manifold Mount

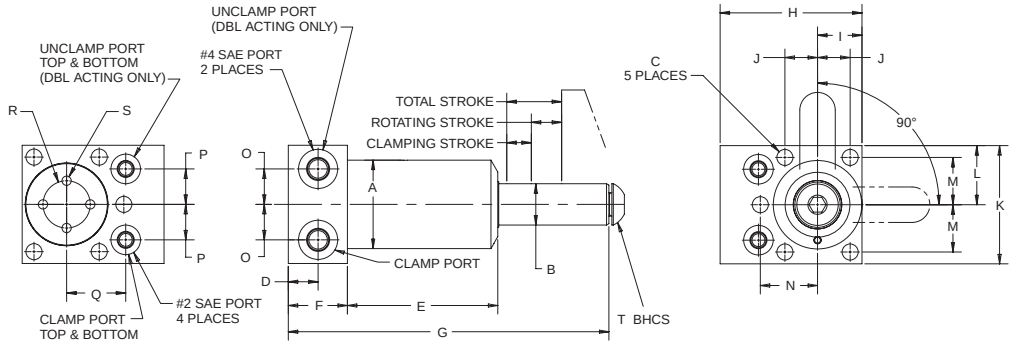

The piston rotates 90° to the right, but may be ordered with 90° left rotation (add - LH to clamp part no.) or no rotation (add - SP to clamp part no.)

- Clamping capacity from 1,100-5,000 lbs. max.
- Manifold mounting or standard plumbing
- Single and Double Acting available
- Highly adaptable flange mount design (Clamping Arms sold separately)

Bottom Flange Swing Cylinders offer versatility as a through hole bottom mount or top plate mounting device.

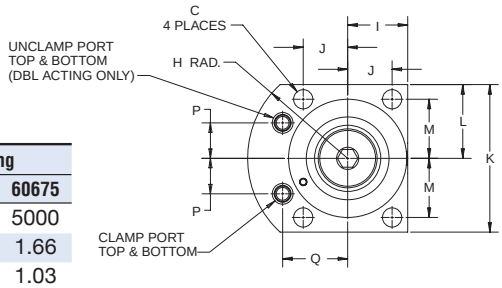

BASE FOR 60665 & 60675

Specifications	Single Acting			Double Acting		
	60661	60663	60665	60671	60673	60675
Maximum Output Force (lbs)	1100	2600	5000	1100	2600	5000
Stroke (in) Total	.79	1.16	1.66	.76	1.16	1.66
Rotating	.48	.66	1.03	.45	.64	1.03
Clamping	.31	.50	.63	.31	.52	.63
Operating Volume Clamp (cu in)	.23	.72	1.96	.23	.72	1.98
Operating Volume Unclamp (cu in)	N/A	N/A	N/A	0.46	1.43	4.00
Minimum Operating Pressure (psi)	750	750	750	500	500	500
Maximum Operating Pressure (psi)	5000	5000	5000	5000	5000	5000
Effective Piston Area (sq in)	.30	.62	1.18	.30	.62	1.18

CAUTION! DON'T ALLOW SWING ARM TO CONTACT THE WORKPIECE OR FIXTURE WHILE ROTATING.

WARNING:
All swing cylinders must be used with flow limit valves to dampen the rotating action. Please see maximum flow rate shown below. See page 142.

Bottom Flange Mount

Single Acting Part No.	Double Acting Part No.	A	B	C	D	E	F	G	H	I	J	K	L	M	N	O	P	Q	R	S	T
60661	**60671**	1.50	0.623	0.28	0.63	2.40	1.25	5.29	2.50	0.75	0.56	2.00	1.00	0.81	0.99	0.56	0.56	1.13	0.66	0.136	3/8-24 x 5/8
60663	**60673**	1.87	0.874	0.34	0.63	3.18	1.25	6.78	3.00	0.94	0.69	2.50	1.25	1.00	1.21	0.75	0.75	1.25	1.00	0.196	1/2-20 x 3/4
60665	**60675**	2.50	1.247	0.41	0.74	4.39	1.50	9.34	3.39	1.27	0.94	3.12	1.56	1.25	–	–	0.75	1.38	1.38	0.196	5/8-18 x 1

Manifold Mounting Dimensions - Bottom Flange

Single Acting Part No.	Double Acting Part No.	A	B	C	D	E	F	G
60661	**60671**	1.540	1/4-20	0.560	0.990	0.810	1.130	0.562
60663	**60673**	1.920	5/16-18	0.690	1.210	1.000	1.250	0.750
60665	**60675**	2.550	3/8-16	0.940	–	1.250	1.375	0.750

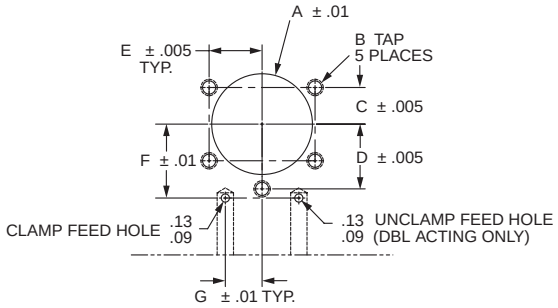

Inch to metric fittings available – see page 199.

Swing Cylinder Arms

- Material: Cast 4140
- Heat Treatment: Hardened and Drawn Rc 32-36

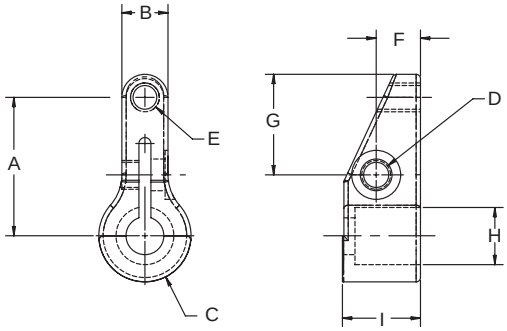

Single Arms - Standard Length

Part No.	A	B	C	D	E	F	G	H	I
60930	1 1/2	1/2	1	5/16-24	5/16-18	31/64	1 3/32	.6255/.6275	27/32
60931	2	3/4	1 3/8	3/8-24	3/8-16	43/64	1 9/16	.8755/.8775	1 5/32
60932	2 1/2	1 1/4	1 7/8	5/8-18	5/8-11	7/8	1 7/8	1.2505/1.2525	1 21/32

- Material: Cast 4140
- Heat Treatment: Hardened and Drawn Rc 32-36

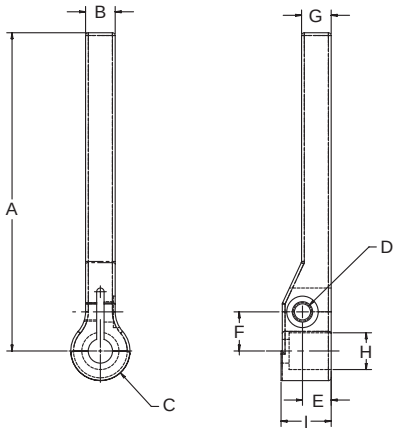

Single Arms - Long

Part No.	A	B	C	D	E	F	G	H	I
60933	5 3/8	1/2	1	5/16-24	31/64	21/32	1/2	.6255/.6275	27/32
60934	6 3/8	3/4	1 3/8	3/8-24	43/64	13/16	5/8	.8755/.8775	1 5/32
60935	6 1/2	1 1/4	1 7/8	5/8-18	7/8	1 1/4	3/4	1.2505/1.2525	1 21/32

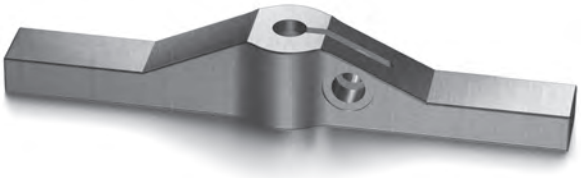

- Material: Cast 4140
- Heat Treatment: Hardened and Drawn Rc 32-36

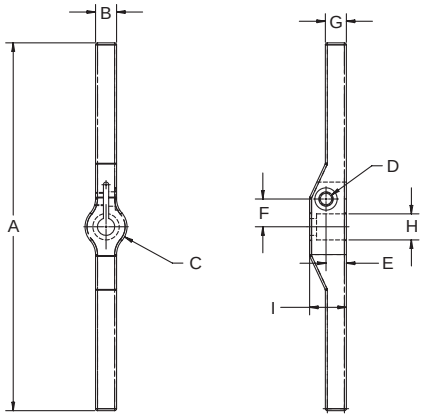

Double Arms - Long

Part No.	A	B	C	D	E	F	G	H	I
60936	8 3/4	1/2	1	5/16-24	31/64	21/32	1/2	.6255/.6275	7/8
60937	10 3/4	3/4	1 3/8	3/8-24	43/64	13/16	5/8	.8755/.8775	1 13/64
60938	11	1 1/4	1 7/8	5/8-18	7/8	1 1/4	3/4	1.2505/1.2525	1 45/64

Swing Cylinder - Application Information

- Arm length can effect clamping pressure - See Chart and Data
- Weight should be considered when utilizing modified or special arms, other than those provided by Jergens. Excessive weight and length may damage external rotating components.
- Speed of operation is a major consideration. All swing cylinders **MUST BE USED WITH FLOW LIMIT VALVES** to show the rotation action.
- Full second rotation time is recommended.
- Care should be used when select hydraulic power sources - be aware of maximum operating pressures.

Swing Cylinder Arm Ratings

Small Cylinders (1,100#) p/n's 60660, 60670, 60661, & 60671	
input pressure (psi)	max. arm length (in)
1,500	5.0
1,750	4.3
2,000	3.8
2,250	3.3
2,500	3.0
2,750	2.7
3,000	2.5
3,250	2.3
3,500	2.1
3,750	2.0
4,000	1.9
4,250	1.8
4,500	1.7
4,750	1.6
5,000	1.5

Medium Cylinders (2,600#) p/n's 60662, 60672, 60663, & 60673	
input pressure (psi)	max. arm length (in)
1,666	6.0
1,750	5.7
2,000	5.0
2,250	4.4
2,500	4.0
2,750	3.6
3,000	3.3
3,250	3.1
3,500	2.9
3,750	2.7
4,000	2.5
4,250	2.4
4,500	2.2
4,750	2.1
5,000	2.0

Large Cylinders (5,000#) p/n's 60664, 60674, 60665, & 60675	
input pressure (psi)	max. arm length (in)
1,923	6.5
2,000	6.3
2,250	5.6
2,500	5.0
2,750	4.5
3,000	4.2
3,250	3.8
3,500	3.6
3,750	3.3
4,000	3.1
4,250	2.9
4,500	2.8
4,750	2.6
5,000	2.5

Max. Arm Length vs. Pressure

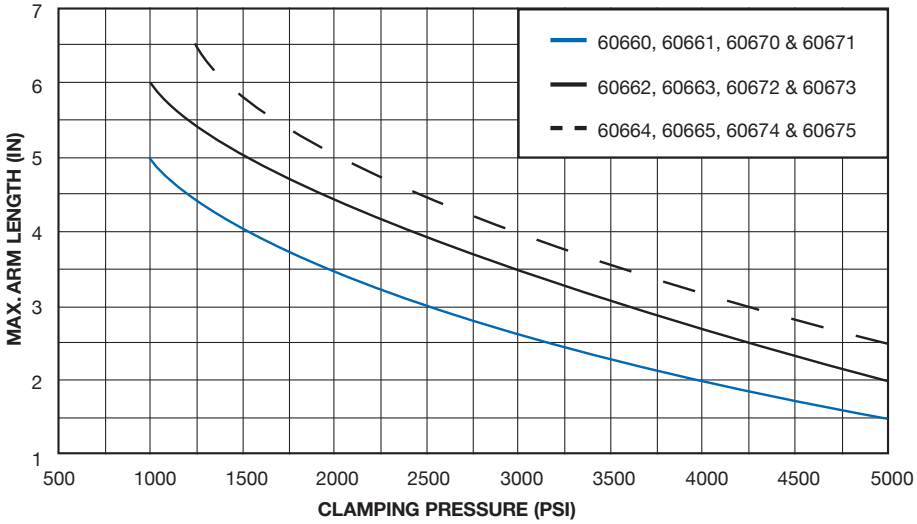

Swing Cylinders

These versatile swing cylinders/clamps can be used as single or double acting rotating clamps, or push/pull cylinders. The piston in the Swing Cylinders rotate 90° to the right, but may easily be changed to 90° left rotation, or to no rotation at all.

WARNING:
All swing cylinders must be used with flow limit valves to dampen the rotating action. Please see maximum flow rate shown below. See page 142.

- Standard with an arm
- Can be mounted using four #10 cap screws or the 1"-12 thread on the O.D. of the cylinder
- Optional components include the threaded mounting bracket and jam nut shown below
- Can be used as a non-rotating clamp
- Maximum recommended flow rate is 20 cubic inches per minute per clamp (approximately 1 second clamp time)
- **Note: Arm length can affect clamping pressures. See chart at right for more information.**
- Available in Fixture Pro® Design Software

Maximum Arm Length Vs. Pressure
Swing Cylinder with Single Arm

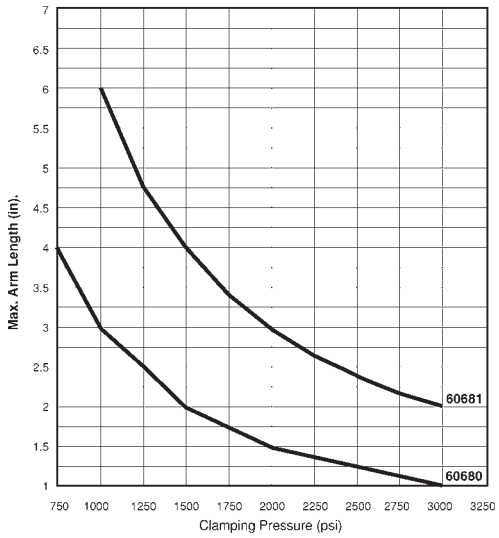

Specifications

60680 Swing Cylinder	Clamp (pull)	Return (push)
Operating Volume (cu in)	.18	.33
Effective Piston Area (sq in)	.24	.44
Minimum Operating Pressure (psi)	120	–
Maximum Operating Pressure (psi)	3000	3000
Maximum Output Force (lbs)	730	1320
Stroke (in): Full	.75	.75
Rotating	.50	.50
Clamping	.25	.25
Weight (lbs)	1	1

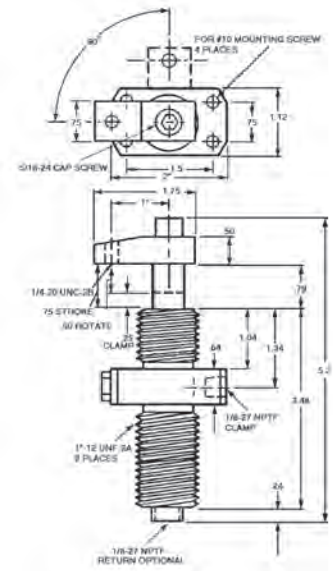

Accessories

Double Arm

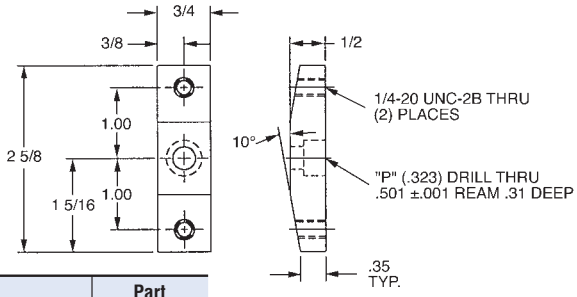

Description	Part Number
Mounting Block	**60953**
Hex Jam Nut	**60964**
Optional Double Arm	**60923**

See page 153.

Mounting Block

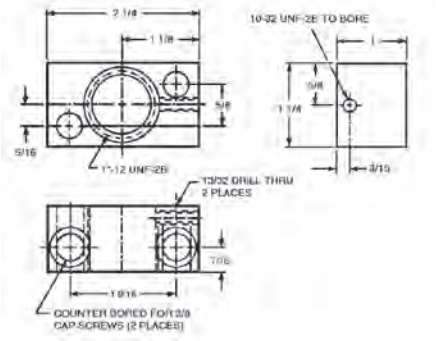

Inch to metric fittings available – see page 199.

Swing Cylinders
Large

- Standard without an arm.
- Socket Head Cap Screw is included.
- Single or double arms are available.
- Can be mounted using four 3/8" cap screws, or the 1 7/8"-16 O.D. thread of the cylinder.
- Optional components include a jam nut or a mounting bracket to replace old Jergens part number 60621.
- Can be used as a non-rotating clamp.
- Maximum recommended flow rate is 90 cubic inches per minute per clamp. (Approximately 1 second clamp time.)
- **Note: Arm length can affect clamping pressures. See chart, page 140, for more information.**
- Available in Fixture Pro® Design Software

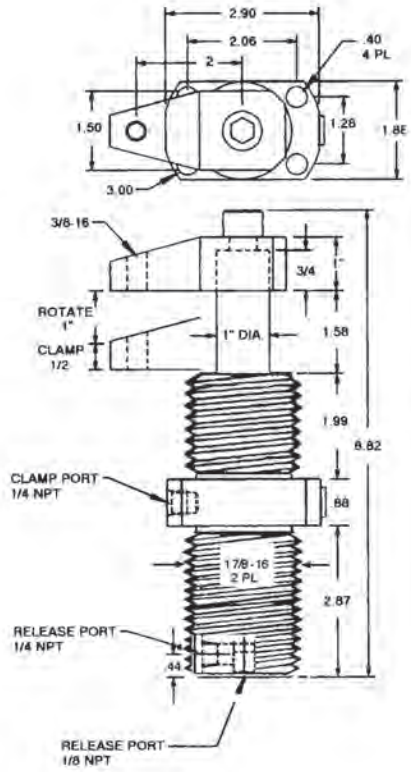

WARNING: All swing cylinders must be used with flow limit valves (see page 142) to dampen the rotating action. Please see maximum flow rate shown above.

Specifications

60681 Swing Cylinder	Clamp (pull)	Return (push)
Operating Volume (cu in)	1.5	2.7
Effective Piston Area (sq in)	.98	1.77
Minimum Operating Pressure (psi)	200	—
Maximum Operating Pressure (psi)	3000	3000
Maximum Output Force (lbs)	2900	5300
Stroke (in): Full	1.5	1.5
Rotating	1	1
Clamping	.50	.50
Weight (lbs)	5	5

Jam Nut Part Number
60967

See page 153.

Accessories

Single Arm Part Number
60921

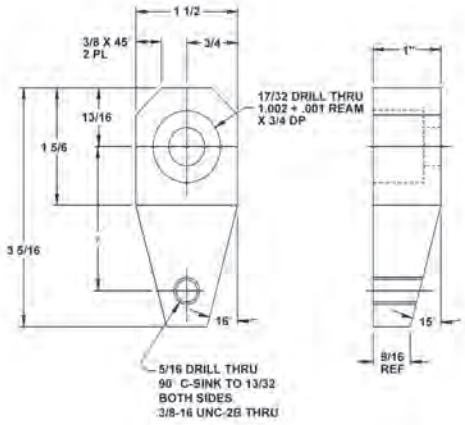

Double Arm Part Number
60922

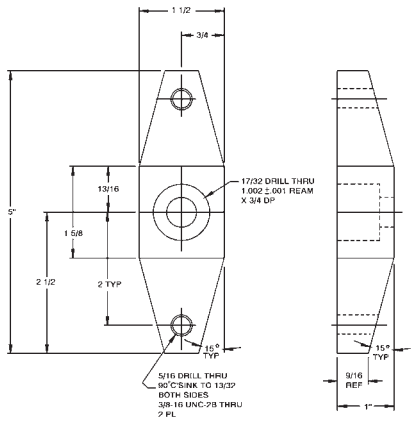

Mounting Bracket Part Number
60954

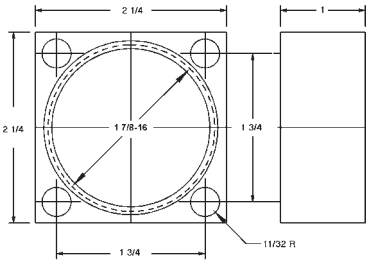

Inch to metric fittings available – see page 199.

Swing Clamps

Jergens Swing Clamps are designed to swing 80° away from the workpiece to allow easy accessibility for part insertion or removal. Swing Clamps may be used in any attitude. The clamping arm may be positioned to swing either to the left or right by repositioning one cap screw. The right hand swing is standard.

- Right or Left Hand Swing
- 4800 lbs. Clamping Force
- Operates in any position
- Clamp arm has 1/4" of vertical travel
- Can be used with flood coolant
- Available in Fixture Pro® Design Software

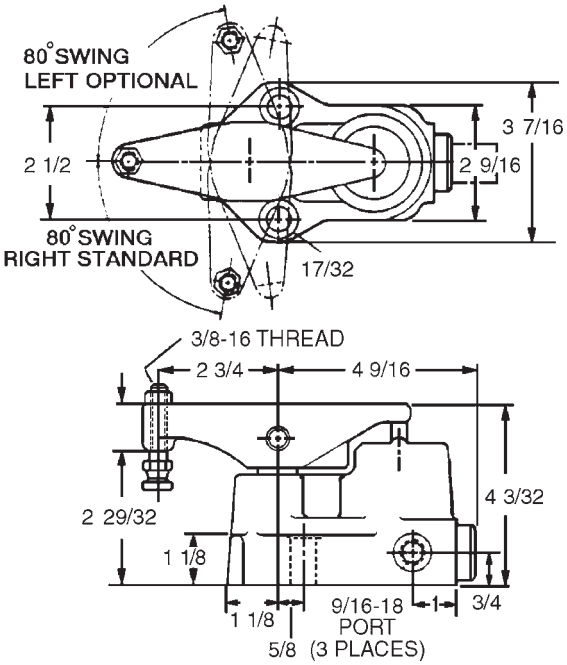

Specifications

Part Number	60685
Operating Volume (Cu. In.)	1.6
Minimum Operating Pressure (psi)	80*
Maximum Operating Pressure (psi)	3000
Maximum Output Force (lbs.)	4800
Weight (lbs.)	9.25

*80 psi to swing, 200 psi to clamp.

IMPORTANT:
Jergens Swing Clamps are built to operate on pre-fill systems allowing much larger circuits to be used. To use a Jergens Swing Clamp with a standard booster or with any other power source you ***must*** use the Flow Limit Valve shown below.

Flow Limit Valves

The Flow Limit Valve restricts the flow of oil to dampen the rotating action of the Swing Clamp. Flow Limit Valves are not needed with 36:1 or 71:1 Air Powered Hydraulic Pumps. (Part Number **61755** or **61756**).

Part Number
61648

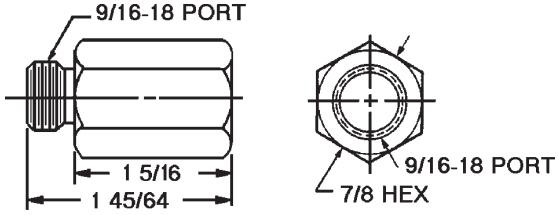

Inch to metric fittings available – see page 199.

Swing Clamp
Application

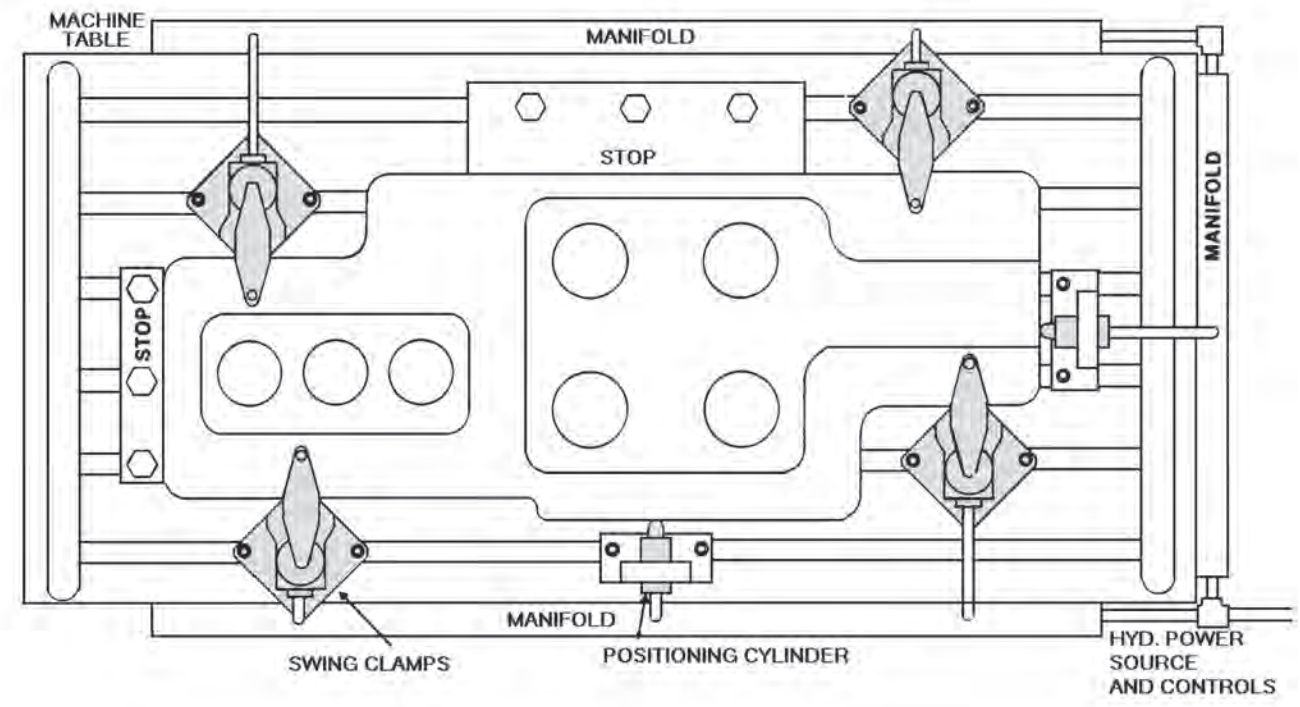

For hydraulic clamping directly on the machine table, use Jergens Swing Clamps and Mounting Plates. The workpiece is positioned using Threaded Cylinders and fixed stops. Manifolds at the edges of the table, with hydraulic quick disconnects, allow any number of clamps to be used.

Mounting Plates

- Material: Low Carbon Steel
- Finish: Black Oxide
- Available in Fixture Pro® Design Software

Part Number
60971

Mounting plates are subplates for Swing Clamps and are designed to save fixturing cost and allow versatility in set-ups. Mounting Plates may be bolted directly to your machine table and moved to any location on the table. Each mounting plate has pre-drilled mounting holes or can be easily adapted to your machine table or application.

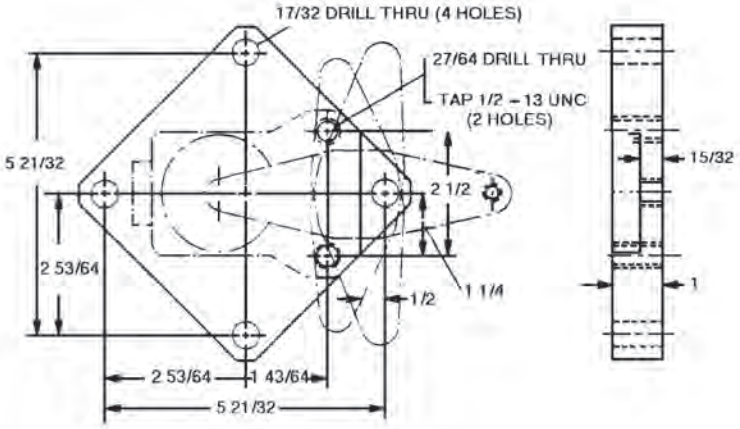

Toe Clamps

U.S. Patents:
No. 4406445

Features

- Single Acting
- Low Profile
- Direct Mounting
- 3/16" Stroke
- 3000 lbs. Force
- Steel or Brass Toe Insert Available
- Available in Fixture Pro® Design Software

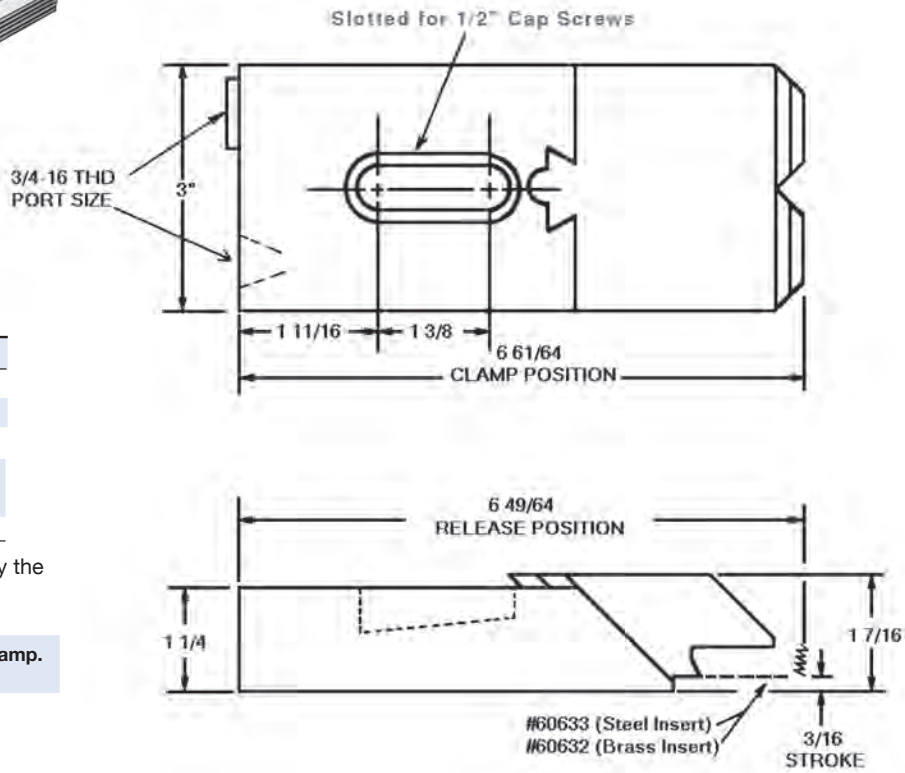

Specifications

Part Number	60631
Operating Volume (cu. in.)	.115
Minimum Operating Pressure (psi)	200
Maximum Output Force (lbs.)	3000
Overall Stroke	3/16

A washer (60636), to prevent damage by the cap screw, is included with each clamp.

Toe Insert is not supplied with the Toe Clamp. See below to order the Toe Inserts.

Toe Inserts

Part Number	Insert
60633	Steel
60632	Brass

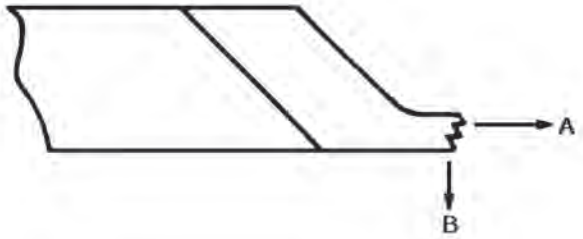

Hydraulic Pressure	Force in Pounds	
	A	B
1500	900	750
3000	1800	1500
5000	3000	2500

Inch to metric fittings available – see page 199.

Toe Clamp
Application

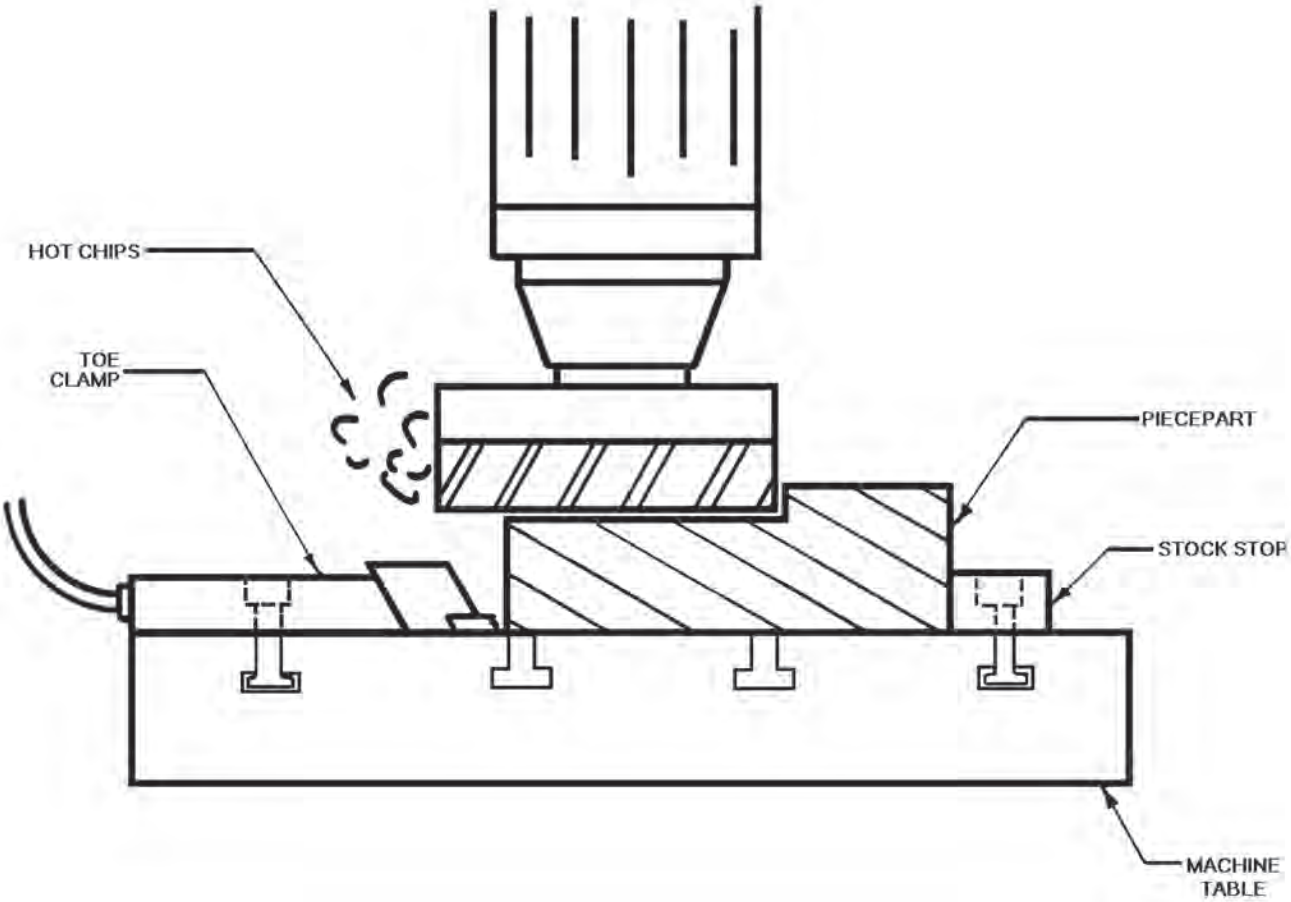

A Toe Clamp is used in applications where clamps cannot be on top of the workpiece due to the fact that the cutter must pass over that area. The clamp holds the workpiece against stop and down on the table. T-Slot mounting gives clamping versatility.

Jergens
WORKHOLDING SOLUTIONS GROUP

Work Supports

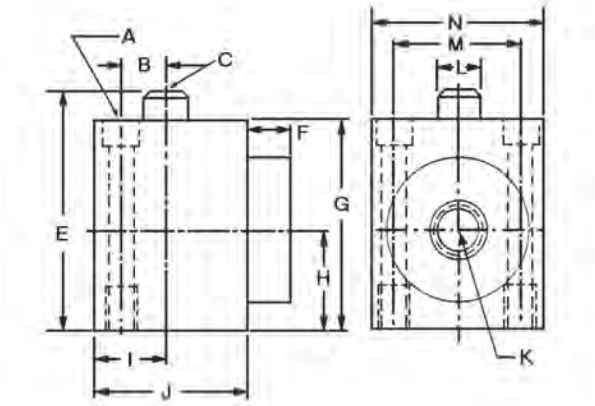

Part Number	Bolt Size Thru A	Bolt Size Tapped A	B	Tap C	Height E Min	Height E Max	F	G	H	I	J	Port K	L	M	N
60513	1/4	5/16-24	.50	1/4-20	2.45	2.70	.49	2.36	1.12	.81	1.75	9/16-18	.5	1.5	2

Hydraulically-locked Work Supports differ from clamps and vises in that they do not actually exert force upon the workpiece. Rather, they are used to support the part being machined, offering resistance to any clamping forces acting counter to the direction of travel of the piston.

In a typical application, a large, thin casting is located on several tooling point pads for positioning. Work Supports will automatically adjust to support the delicate sections of the casting. When hydraulic pressure is applied, the floating pistons within the Work Support are locked in position and resist any downward movement exerted on the casting. After the casting is removed, the floating pistons return to their fully-raised position.

Specifications

Part Number		60513	60512
Operating Volume (cu. in.)		.04	.06
Support to Pressure Ratio		1.6:1	3.3:1
Minimum Operating Pressure (psi)		500	500
Maximum Operating Pressure (psi)		3000	3000
Maximum Support Capacity (lbs.)		5000	10000
Plunger Spring Force (lbs.)	Start	2	14
	Finish	7	40
Weight (lbs.)		2.0	5.5

- Available in Fixture Pro® Design Software

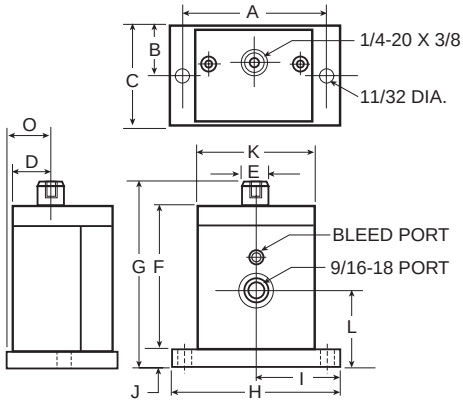

Part Number	A	B	C	D	E	F	G Min	G Max	H	I	J	K	L	O
60512	3 9/16	1 3/8	2 3/4	.990	5/8	3.69	4.15	4.65	4 3/16	2 3/32	3/8	3	1 7/8	1.07

Inch to metric fittings available – see page 199.

Work Support
Applications

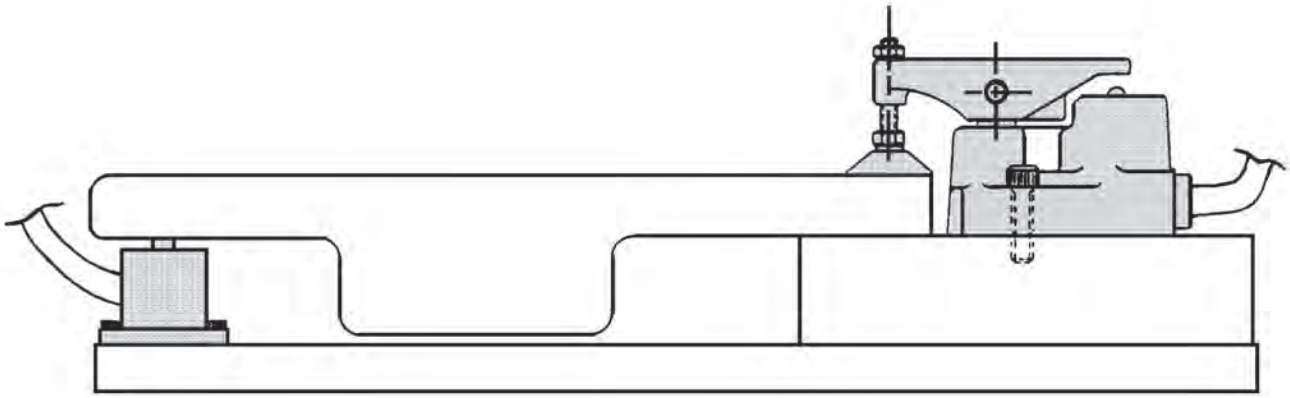

The workpiece is located and clamped on the right end by a Jergens Swing Clamp. The Work Support resists the machining forces applied to the other end of the casting. Variations between castings are compensated for by the floating support plunger in the Work Support.

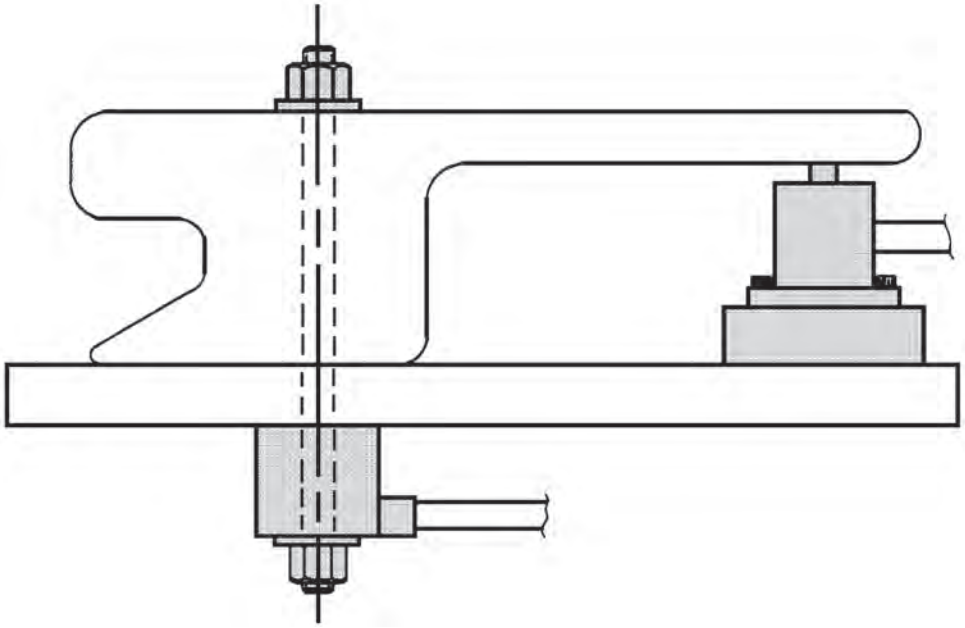

The top and bottom surfaces of the large casting must be machined to be flat, parallel, and at a fixed distance from each other. Jergens Work Supports eliminate deflection at the outer edge while compensating for variations between castings. A Jergens Hollow Rod Cylinder, stud and “C” washer are used to hold the casting.

Hollow Rod Cylinders

Hollow Rod Cylinders are ideal for converting existing fixtures to power clamping. Replaces clamps which use double cams, flange nuts, draw bars, or other mechanical devices. Generally, no special machining is required, just a longer stud.

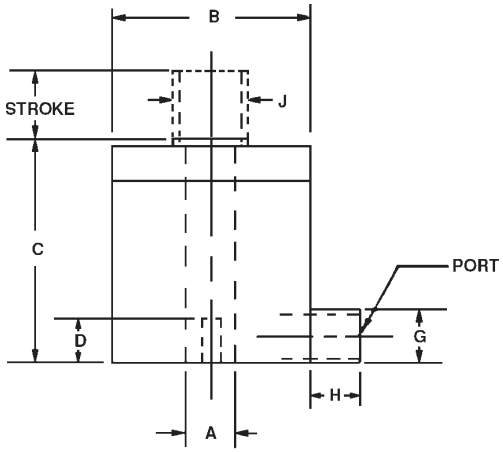

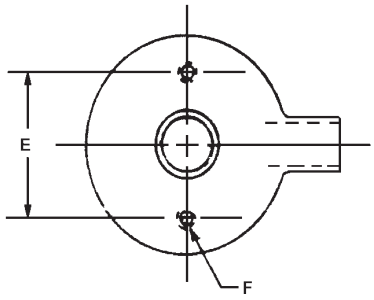

Specifications

Specifications / Part Number	60403 60404 60413 60414	60401 60402 60410 60411 60412	60405
Operating Stroke (in.)	.24	.31	.64
Operating Volume (cu. in.)	.3	.7	3.2
Effective Piston Area (sq. in.)	.96	1.9	5
Min. Oper. Pressure (psi)*	100	100	100
Max. Oper. Pressure (psi)	5000	5000	5000
Max Output Force (lbs.)	4800	9850	25000

* With Spring Installed

Hollow Rod Cylinders can either push or pull. Two styles are available, either Through Hole or Tapped Hole. In the Through Hole style, the piston rod is hollow to accept a bolt. The Tapped Hole cylinders accept a bolt threaded into the piston. Because of the piston design, the Tapped Hole style cannot gain stroke. Removing the return springs make the Hollow Rod Cylinders suitable for air operation.

- Available in Fixture Pro® Design Software

Through Hole Cylinders

Part Number	A	B	C†	D	E	F	G	H	Rod Dia. J	Port Size	Wt. (lbs)
***60403**	13/32	1 15/16	1 7/8	5/16	1 5/8	10-32	3/4	1/2	7/8	7/16-20	1.0
***60404**	17/32	1 15/16	1 7/8	5/16	1 5/8	10-32	3/4	1/2	7/8	7/16-20	1.0
60401	21/32	2 1/2	2 3/16	5/16	2 7/32	10-32	7/8	3/8	1 1/4	9/16-18	2.5
60402	25/32	2 1/2	2 3/16	5/16	2 7/32	10-32	7/8	7/8	1 1/4	9/16-18	2.5
60405	1 1/64	4	3 9/16	5/8	3 1/2	1/4-28	No Boss		2 1/8	9/16-18	10.5

*Cannot increase stroke
† Measured over piston in the retracted position.

Tapped Hole Cylinders

Part Number	A	B	C	Thd. Depth D	E	F	G	H	J	Port Size	Wt. (lbs)
60413	3/8-16	1 15/16	1 13/16	5/16	1 5/8	10-32	3/4	1/2	7/8	7/16-20	1.0
60414	1/2-13	1 15/16	1 13/16	5/16	1 5/8	10-32	3/4	1/2	7/8	7/16-20	1.0
60410	1/2-13	2 1/2	2 3/16	5/16	2 7/32	10-32	7/8	7/8	1 1/4	9/16-18	2.5
60411	5/8-11	2 1/2	2 3/16	5/16	2 7/32	10-32	7/8	7/8	1 1/4	9/16-18	2.5
60412	3/4-10	2 1/2	2 3/16	5/16	2 7/32	10-32	7/8	7/8	1 1/4	9/16-18	2.5

Inch to metric fittings available – see page 199.

Hollow Rod Cylinder
Applications

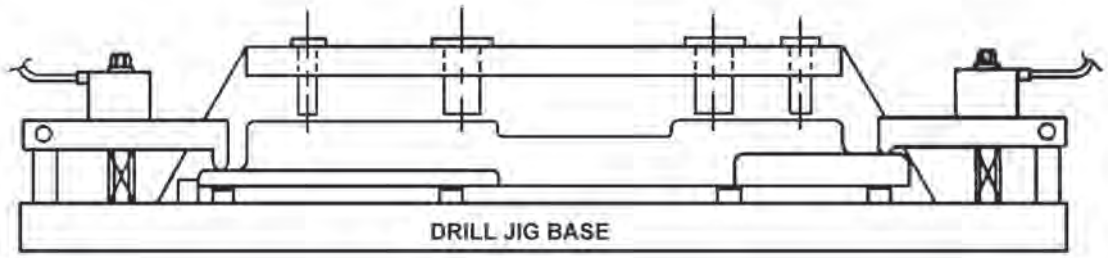

DRILL JIG (SEMI-AUTOMATIC, HYDRAULIC CLAMPING)

Typical, low cost conversion from manual clamping to Hollow Rod Cylinders can be accomplished by using the existing drill jig clamps and changing the stud to a longer length. Besides clamping faster than the manual method, the Hollow Rod Cylinders allow for uniform clamping forces on all strap clamps.

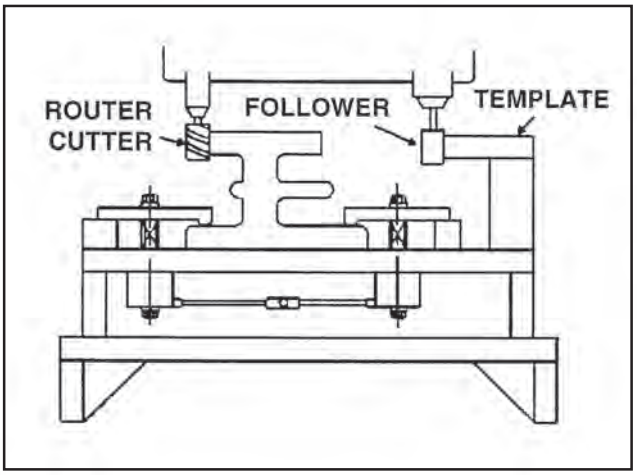

The Hollow Rod Cylinder is ideal for “close to the machine base” strap clamping. By mounting the clamps under the work table, a manual clamping set-up can be easily and economically converted to hydraulic clamping.

Threaded Cylinders
Pressure Points

Jergens Pressure Points may be used with any power source and are designed to be used in restricted areas where space is at a minimum. Pressure Points can be used to eliminate part distortion during machining operations or to hold large diameter castings or rings in place while machining the upper surface. Pressure Points have hardened tool steel tips (50-60Rc). Jam nuts are included. Not suitable for air operation.

- Available in Fixture Pro® Design Software

Specifications

Part Number	61512	61514
Operating Stroke (in.)	3/16	3/16
Operating Volume (cu. in.)	.037	.037
Effective Piston Area (sq. in.)	.20	.20
Minimum Operating Pressure (psi)	400	400
Maximum Operating Pressure (psi)	5000	5000
Maximum Output Force (lbs.)	1000	1000
Weight (lbs.)	.5	.6

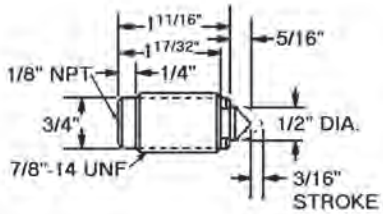

Part Number
61512

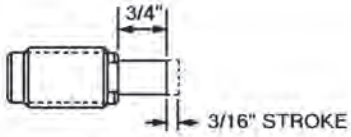

Part Number
61514

Miniature Cylinders

Small, fully-threaded bodies ensure easy mounting and simple length adjustments. Their small size provides high workholding forces in tight places. Threaded Cylinders have hardened piston rods, steel bodies, alloy springs and Teflon® back-up rings which ensure trouble-free operation and long life. Not suitable for air operation. For mounting, see brackets on page 156. Jam nuts are included.

- Available in Fixture Pro® Design Software

Specifications

Part Number	60461	60462
Operating Stroke (in.)	3/16	1/2
Operating Volume (cu. in.)	.018	.049
Effective Piston Area (sq. in.)	.096	.196
Minimum Operating Pressure (psi)	200	300
Maximum Operating Pressure (psi)	10000	10000
Maximum Output Force (lbs.)	960	1960
Weight (lbs.)	.5	.7

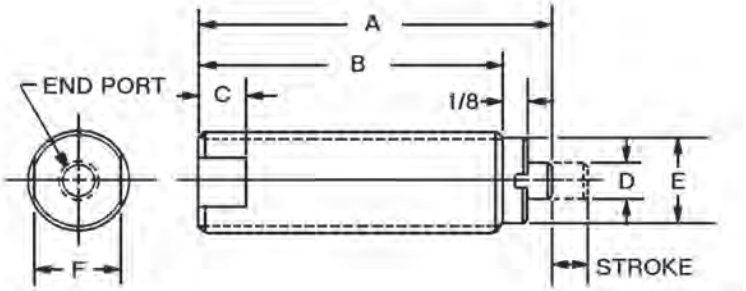

Part Number	Stroke	Body Thread	A	B	C	D	E	F	End Port
60461	3/16	1/2-20	1 13/16	1 9/16	1/4	3/16	3/8	7/16	1/16-27 NPTF
60462	1/2	3/4-16	2 3/8	2	5/16	1/4	21/32	5/8	1/8-27 NPTF

Manifold Mount Cylinders

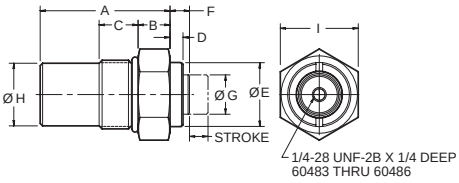

- Provides for clean installation
- Eliminates exposed fittings and plumbing
- Well suited for use in custom design fixtures

Specifications

Part Number	60481	60482	60483	60484	60485	60486
Operating Stroke (in.)	3/16	1/2	1/2	1	1/2	1
Operating Volume (cu. in.)	0.017	0.098	0.393	0.785	0.884	1.767
Effective Piston Area (sq. in.)	0.093	0.196	0.785	0.785	1.767	1.767
Minimum Operating Pressure (psi)	200	200	200	200	200	200
Maximum Operating Pressure (psi)	5000	5000	5000	5000	5000	5000
Maximum Output Force (lbs.)	465	980	3925	3925	8835	8835
Weight (lbs.)	0.5	0.7	1	1.5	2	2.5

Part No.	Body Thread	Stroke	A	B	C	D	E Dia.	F	G Dia.	H Dia.	I Hex.
60481	9/16-18 UNF	3/16	1 13/32	.375	1/2	1/8	3/8	1/4	3/16	.48	3/4
60482	3/4-16 UNF-2A	1/2	1 23/32	.375	9/16	1/8	41/64	3/8	1/4	.66	7/8
60483	1 5/16-12 UN-2A	1/2	2 1/2	.615	3/4	1/4	1 7/32	5/16	3/4	1.19	1 1/2
60484	1 5/16-12 UN-2A	1"	3	.615	3/4	1/4	1 7/32	5/16	3/4	1.19	1 1/2
60485	1 7/8-12 UN-2A	1/2	2 1/2	.615	3/4	1/4	1 47/64	5/16	1 1/4	1.75	2 1/8
60486	1 7/8-12 UN-2A	1"	3	.615	3/4	1/4	1 47/64	5/16	1 1/4	1.75	2 1/8

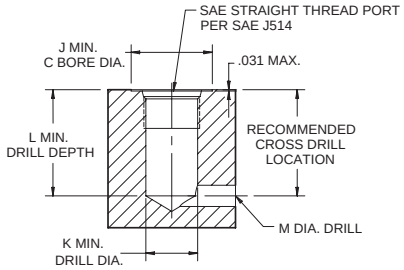

Part No.	SAE No.	Thread Size	Thread Depth	J	K	L	M
60481	6	9/16-18 UNF	1/2	.970	1/2	1.09	1/4
60482	8	3/4-16 UNF-2A	9/16	1.19	11/16	1.41	5/16
60483	16	1 5/16-12 UN-2A	3/4	1.91	1 7/32	2.00	1/2
60484	15	1 5/16-12 UN-2A	3/4	1.91	1 7/32	2.50	1/2
60485	24	1 7/8-12 UN-2A	3/4	2.56	1 13/16	2.00	9/16
60486	24	1 7/8-12 UN-2A	3/4	2.56	1 13/16	2.50	9/16

Pressure Points

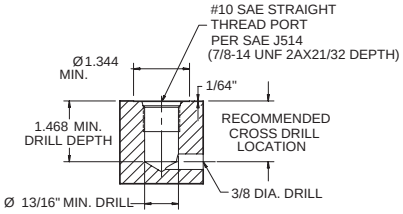

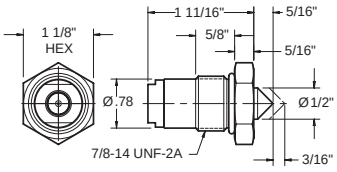

61522

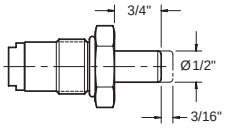

61524

Specifications

Part Number	61522	61524
Operating Stroke (in.)	3/16	3/16
Operating Volume (cu. in.)	0.049	0.049
Effective Piston Area (sq. in.)	0.261	0.261
Minimum Operating Pressure (psi)	400	400
Maximum Operating Pressure (psi)	5000	5000
Maximum Output Force (lbs.)	1305	1305
Weight (lbs.)	0.5	0.5

Jergens
WORKHOLDING SOLUTIONS GROUP

Threaded Cylinders
Heavy-Duty

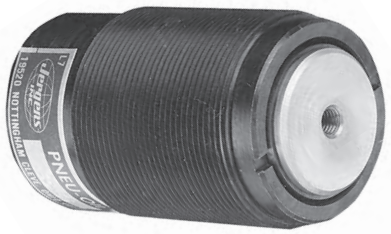

Full-threaded bodies ensure easy mounting and simple length adjustments. Their small size provides high work holding forces in tight places. Threaded Cylinders have hardened piston rods, steel bodies, alloy springs and Teflon® back-up rings which ensure trouble-free operation and long life. Not suitable for air operation. For mounting, see bracket and jam nuts on page 153.

- Compact Design
- Easy Installation
- Side and Rear Ports
- Tapped Piston

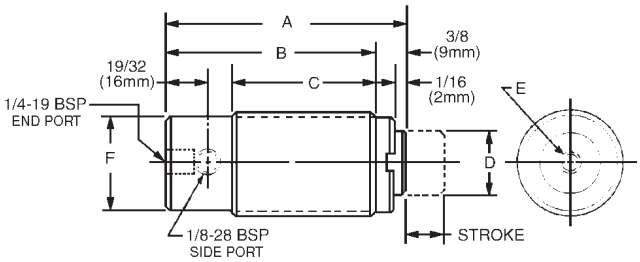

Specifications - Inch

Part Number	60463	60464	60465	60466
Operating Stroke (in.)	1/2	1	1/2	1
Operating Volume (cu. in.)	.392	.785	.883	1.767
Effective Piston Area (sq. in.)	.785	.785	1.767	1.767
Minimum Operating Pressure (psi)	200	200	200	200
Maximum Operating Pressure (psi)	5000	5000	5000	5000
Maximum Output Force (lbs.)	3925	3925	8835	8835
Weight (lbs.)	1.0	1.5	2.0	2.5

Specifications - Metric

Part Number	63213	63214	63215	63216
Operating Stroke (mm)	13	25	13	25
Operating Volume (cu. Cm.)	6.4	12.8	14.5	29
Effective Piston Area (cm^2)	5	5	11.4	11.4
Maximum Oper. Pressure (bars)	340	340	340	340
Minimum Oper. Pressure (bars)	14	14	14	14
Maximum Output Force (kg)	1780	1780	4007	4007
Weight (kg)	.45	.68	.90	1.13

Inch

Part Number	Stroke	Body Thread	A	B	C	D	E	F	Input Ports End	Input Ports Side
60463	1/2	1 5/16-16	3 1/4	2 7/8	2	3/4	1/4-28 x 1/4	1 7/32	7/16-20 SAE	1/8-NPT
60464	1	1 5/16-16	3 3/4	3 3/8	2 1/2	3/4	1/4-28 x 1/4	1 7/32	7/16-20 SAE	1/8-NPT
60465	1/2	1 7/8-16	3 1/4	2 7/8	2	1 1/4	1/4-28 x 1/4	1 25/32	7/16-20 SAE	1/8-NPT
60466	1	1 7/8-16	3 3/4	3 3/8	2 1/2	1 1/4	1/4-28 x 1/4	1 25/32	7/16-20 SAE	1/8-NPT

Cylinders are supplied with a plug installed in the side port.
To use side port, remove plug and install part number 61060 (7/16-20 pipe plug) to plug end port.

Metric

Part Number	Stroke	Body Thread	A	B	C	D	E	F	Input Ports End	Input Ports Side
63213	13	M36 x 1.5	82	73	51	19	M6 x 1.0 x 6	31	1/4 - 19 BSP	1/8 - 28 BSP
63214	25	M36 x 1.5	95	86	64	19	M6 x 1.0 x 6	31	1/4 - 19 BSP	1/8 - 28 BSP
63215	13	M48 x 1.5	82	73	51	32	M6 x 1.0 x 6	44	1/4 - 19 BSP	1/8 - 28 BSP
63216	25	M48 x 1.5	95	86	64	32	M6 x 1.0 x 6	44	1/4 - 19 BSP	1/8 - 28 BSP

Cylinders are supplied with a plug installed in the side port.

Threaded Cylinders

Piston Buttons

1/4 - 28 Thread

Hardened steel buttons for use on 60463 thru 60466 cylinders.

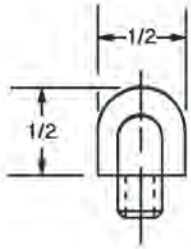

60471

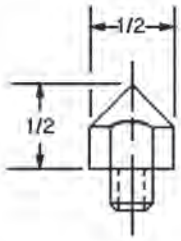

60472

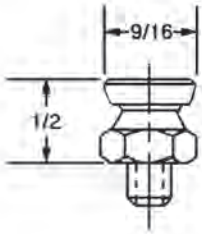

60473

Threaded Cylinders

Block Mountings

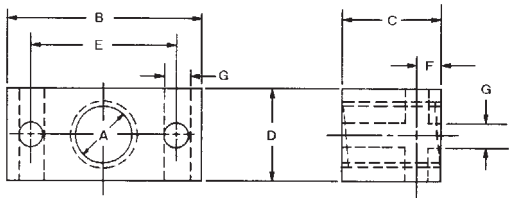

- Material: Low Carbon Steel
- Finish: Black Oxide

Inch

Part Number	A	B	C	D	E	F	G	Wt. (lbs)
60950	1/2-20	1 3/8	3/4	5/8	15/16	1/4	1/4	.125
60951	3/4-16	1 5/8	1 1/8	1	1 1/8	1/4	1/4	.375
60959	7/8-14	2	3/4	1 1/2	1 1/2	3/8	21/64	.40
60956	1 5/16-16	3	1 1/4	1 13/16	2 1/8	7/16	25/64	1.27
60957	1 9/16-16	3 1/4	1 1/2	2	2 7/16	7/16	25/64	1.95
60958	1 7/8-16	4	2	2 3/8	3	1/2	33/64	—

Metric

Part Number	A	B	C	D	E	F	G	Wt. (kg)
60997	M36 x 1.5 6H	82.6	38.1	50.8	62	12	10.8	.86
60998	M48 x 1.5 6H	101.6	38.1	60.3	76	12	13	1.13

Flange Mountings

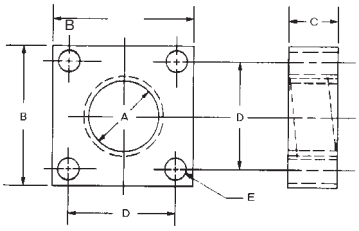

- Material: Low Carbon Steel
- Finish: Black Oxide

Inch

Part Number	A	B	C	D	E	Wt. (lbs)
60952	1 5/16-16	1 5/8	1/2	1 1/4	17/64	.18
60955	1 9/16-16	2	1	1 1/2	17/64	.56
60954	1 7/8-16	2 1/4	1	1 3/4	21/64	.625

Metric

Part Number	A	B	C	D	E	Wt. (kg)
60995	M36 x 1.5 6H	50.8	25.4	38	6.7	.30
60994	M48 x 1.5 6H	63.5	25.4	50	8.8	.42

Jam Nuts

Part Number	60961	60962	60963	60964	60965	60966	60967
Thread	1/2-20	3/4-16	7/8-14	1-12	1 5/16-16	1 9/16-16	1 7/8-16
Thickness	5/16	3/8	5/16	35/64	25/64	25/64	7/16
Width Across Flats	3/4	1 1/8	1 5/16	1 5/8	1 7/8	2 1/4	3

Standard Cylinders
Single Acting

These single-acting, spring-return cylinders will operate on air or oil; all have a 1" stroke.

Single-acting cylinders are especially applicable to large circuits where cylinders are plumbed into the air side of the circuit and used to align parts in the fixture prior to hydraulic clamping. These applications are primarily pushing type operations where the cylinder return spring pulls only the piston rod.

- Available in Fixture Pro® Design Software

NOTE: Not recommended for applications where coolant or chips are prevalent. Use double acting style (next page) for these applications

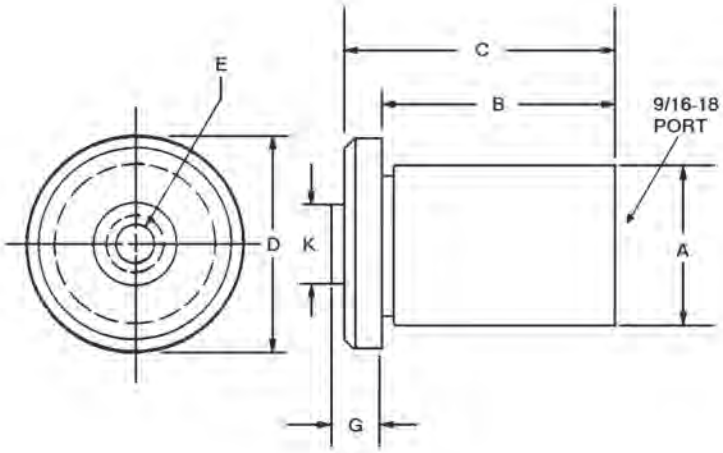

Specifications

Part Number	60301	60307	60303
Operating Stroke (in.)	1	1	1
Operating Volume (cu. in.)	.44	1.22	3.14
Effective Piston Area (sq. in.)	.44	1.22	3.14
Minimum Operating Pressure (psi)	32	25	25
Maximum Operating Pressure (psi)	3000	3000	3000
Maximum Output Force (lbs.)	1320	3660	9300
Weight (lbs.)	.5	1	3

Bore Tolerances: +.0005
-.0010

Dimensions

Part Number	A	B	C	D	Tap E	G	K
60301	1.000	2 3/8	2 5/8	1 15/64	1/4-20 x 1/2	7/16	3/8
60307	1.500	2 3/8	2 5/8	1 47/64	3/8-16 x 3/4	7/16	1/2
60303	2.500	2 3/8	2 5/8	2 47/64	3/8-16 x 3/4	7/16	3/4

Inch to metric fittings available – see page 199.

Standard Cylinders
Double Acting

Double Acting Cylinders can be used for clamping, holding positioning, staking, punching...anywhere that a heavy duty cylinder is needed. If the cylinder is mounted in the fixture (as opposed to using mounting brackets), the fixture should be bored to between .0005 and .0010 over the "A" dimension. Doing so will prevent an out-of-round condition of the cylinder body which could damage the piston. They may be returned by air or by hydraulic pressure.

- Available in Fixture Pro® Design Software

Specifications

Part Number		60345	60341	60350	60351	60360	60361
Operating Stroke (in.)		1	1	2	2	3	3
Operating Volume (cu. in.)		1.1	3.14	2.2	6.28	3.31	9.42
Effective Piston Area (sq. in.)	-Push	1.1	3.14	1.1	3.14	1.1	3.14
	-Pull	.912	2.699	.956	2.699	.956	2.699
Minimum Operating Pressure (psi)		20	20	20	20	20	20
Maximum Operating Pressure (psi)		3000	3000	3000	3000	3000	3000
Maximum Output Force (lbs.)		3300	9300	3300	9300	3300	9300
Weight (lbs.)		2.5	4.5	3.5	6.0	4.75	6.2

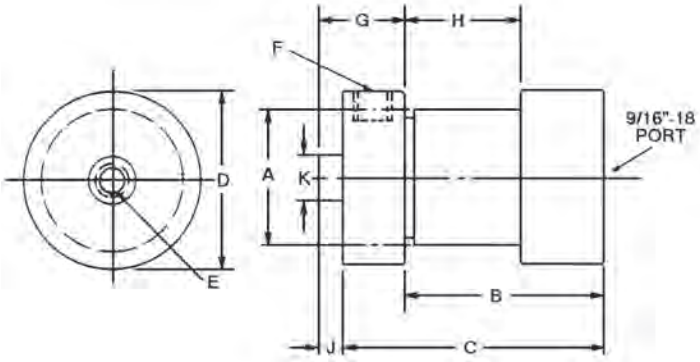

Dimensions

Part Number	A	B	C	D	Tap E	Return Port F	G	H	J	K
60345	1.500	2 7/16	3 1/8	2 15/32	3/8-16 x 3/4	7/16-20	31/32	1 9/32	1/4	1/2
60341	2.500	2 11/16	3 3/8	2 31/32	3/8-16 x 3/4	7/16-20	31/32	1 9/32	1/4	3/4
60350	1.500	3 1/2	4 1/2	2 15/32	1/4-20 x 1/2	9/16-18	1 7/32	2 11/32	1/4	7/16
60351	2.500	3 3/4	4 23/32	2 31/32	3/8-16 x 3/4	9/16-18	1 3/16	2 11/32	1/4	3/4
60360	1.500	4 1/2	5 1/2	2 15/32	1/4-20 x 1/2	9/16-18	1 7/32	3 11/32	1/4	7/16
60361	2.500	4 3/4	5 23/32	2 31/32	3/8-16 x 3/4	9/16-18	1 3/16	3 11/32	1/4	3/4

Inch to metric fittings available – see page 199.

Standard Cylinders
Mounting Brackets

Mounting Brackets are designed to save you time and money when laying out your fixture.

All Mounting Brackets are made of low carbon steel, which is not heat-treated. This allows you to custom fit or weld the brackets into your fixture. The cylinder clamping area is concentric to the OD of the various cylinders to avoid distortion of the cylinder walls which may cause damage to the piston.

Spacers may be used to add height to the cylinders when using Jergens Mounting Brackets.

- Material: Low Carbon Steel
- Finish: Black Oxide
- Bore Tolerances: +.0005
  -.0010
- Available in Fixture Pro® Design Software

Part Number	A	B	C	D	E	Tap F	G	H	(2 Bolts Supplied) I	Wt. (lbs)
60901	1 1/4	3 3/4	2 3/8	1 1/2	1.00	1/2-13	3/4	2	3/8-16 x 4	2.75
60902	1 1/4	4	3 1/2	2 1/8	1.50	3/4-10	1	2	1/2-13 x 4 1/2	3.5
60903	1 1/4	4 1/2	4 3/8	3 1/4	2.50	3/4-10	1 1/2	2	5/8-11 x 5	4.75

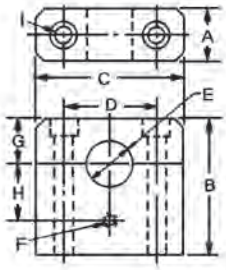

Part Number	A	B	C	D	E	Tap F	G	H	I	(2 Bolts Supplied) J	Wt. (lbs)
60904	1 1/4	3 3/4	2 3/8	1 1/2	1.00	1/2-13	3/4	2	2 9/16	3/8-16 x 1 1/2	2.7
60905	1 1/4	4	3 1/8	2 1/8	1.50	3/4-10	1	2	2 1/2	1/2-13 x 1 1/2	3.5
60906	1 1/4	4 1/2	4 3/8	3 1/4	2.50	3/4-10	1 1/2	2	2 7/16	5/8-11 x 1 1/2	4.7

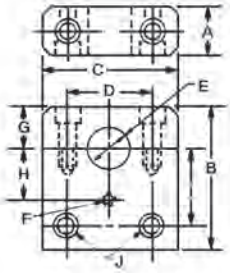

Part Number	A	B	C	D	E	F	(2 Bolts Supplied) G	Wt. (lbs)
60907	1 1/4	1 1/2	2 3/8	1 1/2	1.00	3/4	3/8-16 x 1 3/4	.95
60908	1 1/4	2	3 1/8	2 1/8	1.50	1	1/2-13 x 2 1/4	1.50
60909	1 1/4	3	4 3/8	3 1/4	2.50	1 1/2	5/8-11 x 3 1/4	2.75

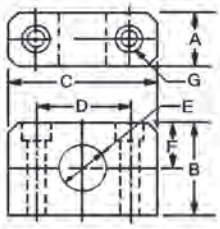

Threaded Cylinder
Applications

By replacing step blocks or similar mechanical devices with a threaded cylinder, manual clamping is easily adaptable into a more productive hydraulic clamping set-up.

This principle of "building block" components can be combined with various Jergens cylinders, standard components and mounting blocks or strap clamps; thus allowing an almost infinite method of production clamping.

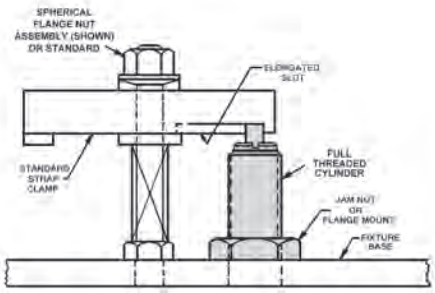

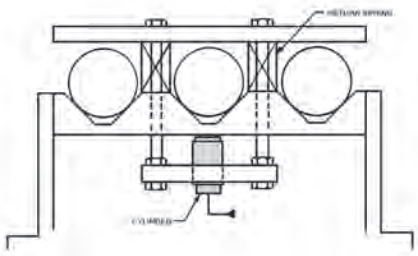

Standard Cylinder
Applications

Holding Fixture

A Single Acting Cylinder is used to locate and clamp the workpiece in a channel fixture. The cylinder rod automatically returns when the booster pressure is released.

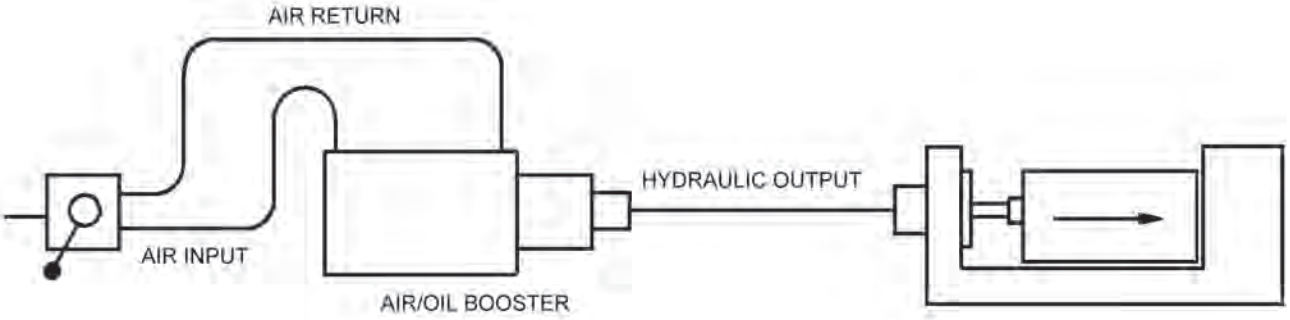

Vise Fixture

A Double Acting Cylinder is being used to operate a Vee Jaw in the above fixture. Hydraulic pressure is used to clamp and unclamp the jaw. Air pressure, used to return the Double Acting Cylinder, is connected to the air return line of the Booster. Jergens Double Acting Cylinders will operate with as little as 10 psi of air pressure or up to 3000 psi of hydraulic pressure.

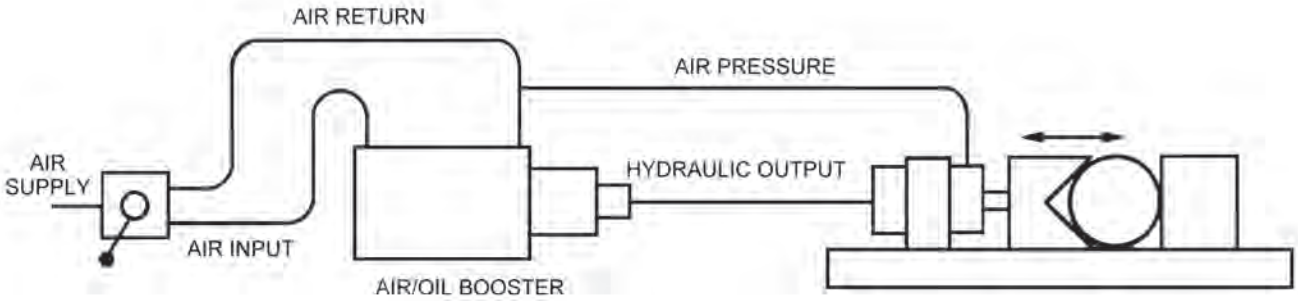

Block Cylinders
Single Acting Horizontal

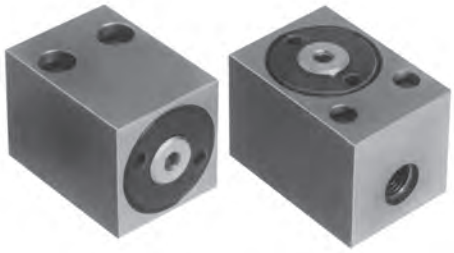

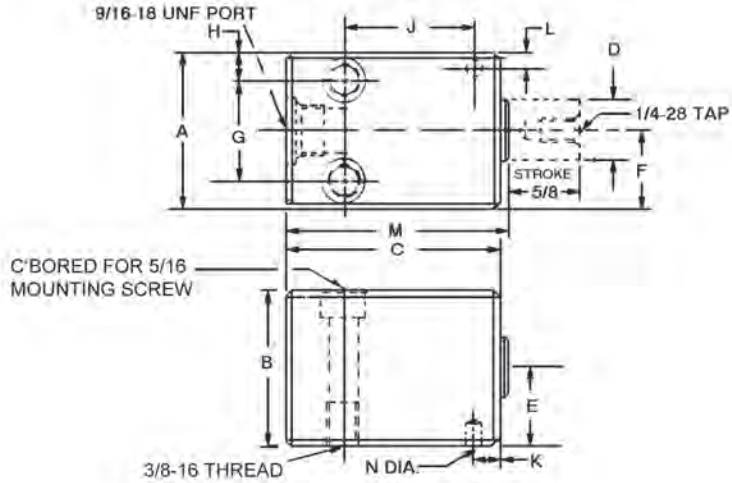

- Vertical and Horizontal Styles
- Simple Mounting
- Compact Design

Dimensions (Horizontal Style)

Part Number	A	B	C	D	E	F	G	H	J	K	L	M	N
60372*	1 3/4	1 3/4	2 7/16	11/16	7/8	7/8	1	3/8	1 15/32	9/32	3/16	2 1/2	.194

Dimensions (Vertical Style)

Part Number	A	B	C	D	E	F	G	H	J	K	L	M	N	P	Mtg. Screw Size	Mtg. Thread
60371*	1 3/4	1 3/4	2 1/2	11/16	1	7/8	1 1/8	5/16	1 11/16	1/4	1 13/16	1/4-28 UNF	.194	1 9/16	#10	1/4-20 UNC
60373	2 1/2	2 1/2	3 3/16	1 1/2	1 11/32	1 1/4	—	—	2 3/32	7/16	2 11/16	3/8-24 UNF	.257	1 15/16	5/16	3/8-16 UNC
60374	3 1/2	3	4	2	1 1/2	1 3/4	1 3/4	7/8	—	—	3 3/8	1/2-20 UNF	—	2 1/4	5/16	3/8-16 UNC

*Not recommended for applications where coolant or chips are prevalent.

Single Acting Vertical

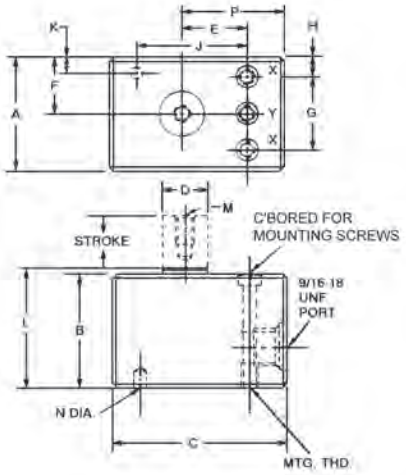

Specifications (Both Styles)

Part Number	60371	60372	60373	60374
Operating Stroke (in.)	5/8	5/8	1/2	1/2
Operating Volume (cu. in.)	.77	.77	1.1	1.96
Effective Piston Area (sq. in) -Push	1.22	1.22	1.77	3.14
-Pull	Spring Return	Spring Return	Spring Return	Spring Return
Maximum Operating Pressure (psi)	5000	5000	5000	5000
Maximum Output Force (lbs.)	6100	6100	8850	15700
Weight (lbs.) Approx.	2	2	5	11
Mounting Location	X Position	As Shown	Y Position	X Position

"X" refers to double mounting hole style.
"Y" refers to single mounting hole style.

Inch to metric fittings available – see page 199.

Block Cylinders
Heavy Duty Double Acting

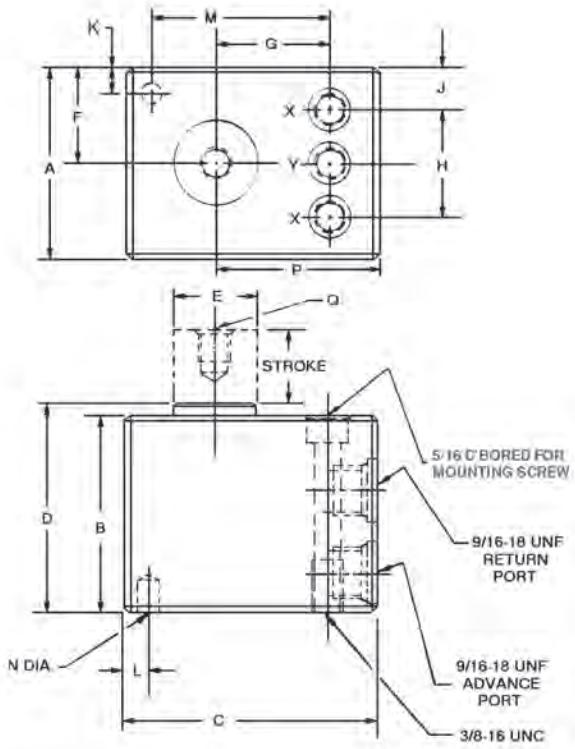

- Simple Mounting
- Compact Design
- High Output Forces

Specifications

Part Number	60381	60382	60383	60384
Operating Stroke (in.)	1/2	1	1/2	1
Operating Volume (cu. in.)	.88	1.77	1.57	3.14
Effective Piston Area (sq. in) -Push	1.77	1.77	3.14	3.14
Effective Piston Area (sq. in) -Pull	.98	.98	1.37	1.37
Minimum Operating Pressure (psi)	20	20	20	20
Maximum Operating Pressure (psi)	5000	5000	5000	5000
Maximum Output Force (lbs.)	8850	8850	15700	15700
Weight (lbs.) Approx.	4	4.8	10.5	12.1
Mounting Location	Y Position		X Position	

"X" refers to double mounting hole style.
"Y" refers to single mounting hole style.

Dimensions

Part Number	A	B	C	D	E	F	G	H	J	K	L	M	N	P	Stroke	Q
60381	2 1/4	2 5/16	3	2 7/16	1	1 1/8	1 11/32	—	—	5/16	5/16	2 3/32	.257	1 15/16	1/2	3/8-24 UNF-2B
60382	2 1/4	2 13/16	3	2 15/16	1	1 1/8	1 11/32	—	—	5/16	5/16	2 3/32	.257	1 15/16	1	3/8-24 UNF-2B
60383	3 1/4	3 1/4	3 3/4	3 3/8	1 1/2	1 5/8	1 1/2	1 3/4	3/4	—	—	—	—	2 1/4	1/2	1/2-20 UNF-2B
60384	3 1/4	3 3/4	3 3/4	3 7/8	1 1/2	1 5/8	1 1/2	1 3/4	3/4	—	—	—	—	2 1/4	1	1/2-20 UNF-2B

Inch to metric fittings available – see page 199.

Flange Mount Cylinders

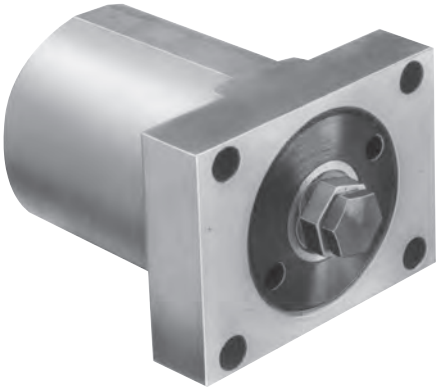

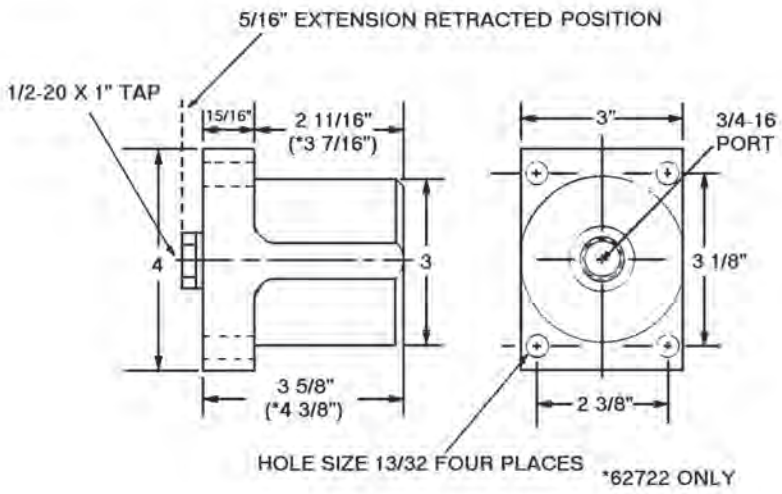

- Easy Mounting
- Heavy Duty
- High Output Forces
- Long Lasting
- Available in Fixture Pro® Design Software

The Jergens Heavy Duty Flange Mount Cylinders mount through holes on the flange of the cylinder body. This feature eliminates the need for separate mounting brackets. The cylinders can provide high forces for clamping, lifting and pressing. Not recommended with flood coolant applications.

Specifications

Part Number	62721	62722
Operating Stroke (in.)	1/2	1
Operating Volume (cu. in.)	1.9	3.9
Effective Piston Area (sq. in.)	3.9	3.9
Minimum Operating Pressure (psi)	100	100
Maximum Operating Pressure (psi)	5000	5000
Maximum Output Force (lbs.)	19880	19880
Weight (lbs.)	5.0	6.5

Inch to metric fittings available – see page 199.

Intensifier Cylinders

Intensifier Cylinders are combination air-hydraulic cylinders. An air powered cylinder is driven into a small oil reservoir which produces a nominal 8:1 or 30:1 power boost ratio, depending upon air pressure and the cylinder used. These miniature, self-contained power sources are ideal where fast action (100 operations per minute), a short stroke and high power are needed.

- 8:1 and 30:1 Boost Ratios
- Self-Contained
- Fast Acting
- Air Controlled
- Easy Recharge Without Disassembly
- Available in Fixture Pro® Design Software

For Mounting Brackets see page 156.

Specifications

Part Number	60596	60598
Operating Stroke (in.)	1/4	1/4
Force (lbs.) at Inlet Air Pressure 125 psi Max.	950	3700
100 psi	700	2900
75 psi	450	2100
50 psi	250	1300
25 psi Min.	50	450
Weight (lbs.)	2.2	4.5
Ratio	8:1	30:1

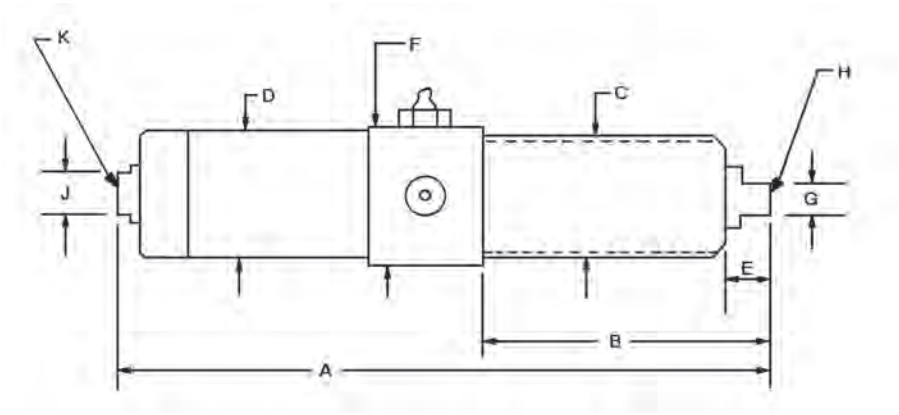

Dimensions

Part Number	A	B	Thread C	D	E	F	Across Flats G	Tap H	Across Flats J	Port K
60596	7 1/4	2 13/16	1 9/16-16	1 3/4	23/32	2	3/4	5/16-24 x 1/2	7/8	9/16-18
60598	9 5/16	3 15/16	1 7/8-16	2 1/2	23/32	2 1/2	3/4	5/16-24 x 1/2	7/8	9/16-18

Inch to metric fittings available – see page 199.

Intensifier Cylinder
Applications

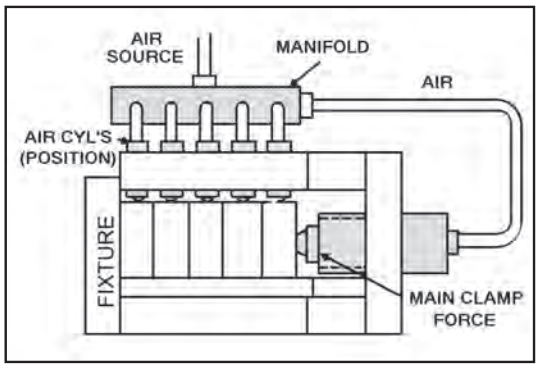

Positioning
A series of plates are gang loaded into the fixture. Air operation of the intensifier assures fast and positive positioning of the plates, after which the multiple hydraulic cylinders are used to clamp.

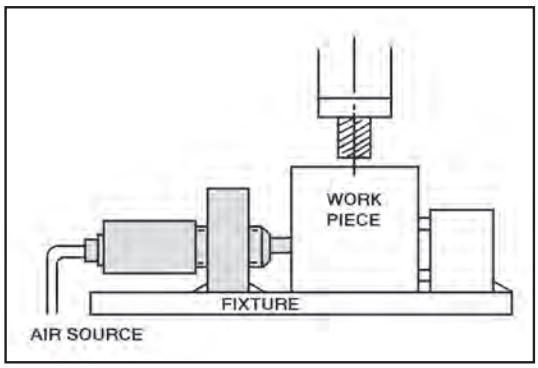

Clamping
Installed in a Jergens Mounting Bracket, the Intensifier Cylinder provides efficient, versatile, yet economical clamping.

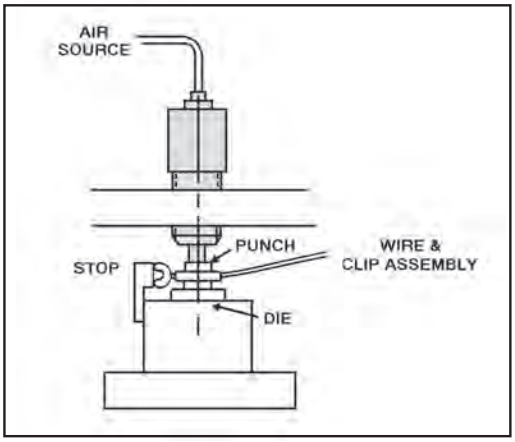

Crimping
The intensifiers may be installed at any attitude. Mounted in a vertical attitude (as shown), up to 1 1/2 tons of force is available for crimping, punching, or notching.

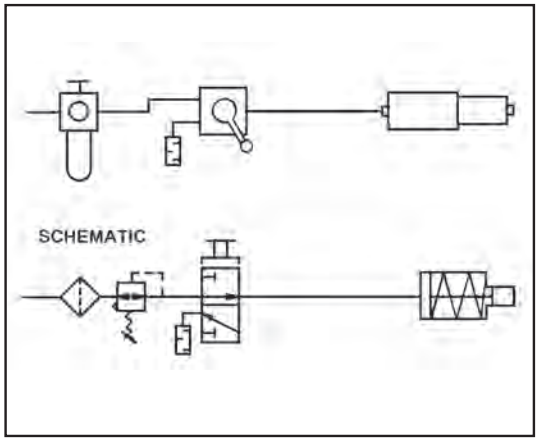

Circuit Diagrams
A filter/regulator and a 3-way hand valve are all that is required to control an Intensifier Cylinder. Installation is as simple as an air cylinder but the resulting force is much greater.

How to Design Your Own Hydraulic System

1. Calculate the force used to hold the workpiece during machining.
   To convert the torque applied to a fastener into holding force use the following formula:

$$P = \frac{T}{KD}$$

Where:
P = Holding Force (lbs.)
T = Torque (in. lbs.)
D = Nominal Thread Diameter (in.)
K = Friction Factor
(K Varies with material, finish, and lubrication, .19 to .25)

Example: 1/2-13 bolt tightened to 30 ft. lbs
(360 in. lbs.) provides 3600 lbs. of force.

$$P = \frac{360}{(.2 \times .5)} = 3600$$

2. Calculate the force required at each work unit.

$$\frac{\text{Total Force}}{\text{Number of work units}} = \text{Force per unit}$$

3. Select the style of work unit to be used at each location. Select units which can be easily mounted and will allow access for loading and unloading of the workpiece.

4. Compare the force required by each work unit with the maximum force available from the unit selected. If the required force is greater than the available force, substitute larger work units or increase the number of work units to be used.

5. Calculate the hydraulic pressure required to provide the force needed at each work unit. To determine pressure, divide the force required at the work unit by the effective piston area of the unit selected.

$$\frac{\text{Force}}{\text{Area}} = \text{Pressure}$$

   The unit requiring the highest pressure determines the requirement for the entire system.

6. Determine the total volume of oil required to operate all of the work units (Volume = Piston Area x Stroke).
   Operating volume requirements for work units are listed in the specifications chart for the item.

7. Select a power source which will provide the required pressure, using the available air pressure. To determine if a power source will provide the required pressure from available air pressure, multiply the available air pressure by the boost ratio of the power source.

   Example: (90 psi air pressure) (15:1 boost ratio) = 1350 psi hydraulic pressure

   The power source must also provide the total volume of oil required by the system. When using a standard booster, the high pressure volume of the unit must exceed the system requirement.

8. If you need help, call Jergens Technical Sales at: 1-877-426-2504.

Staylock Clamps

Stays Mechanically Locked– Even When Disconnected from Hydraulic Pressure

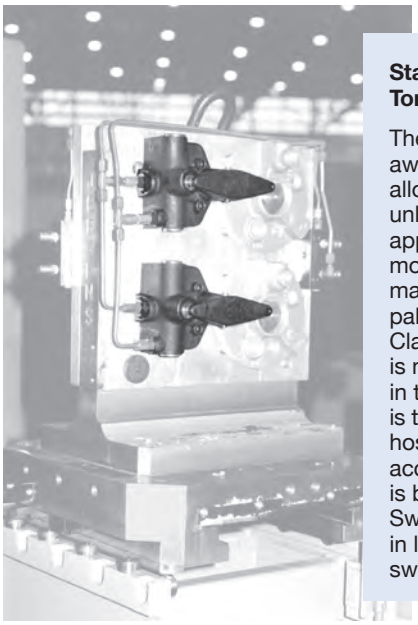

StayLock Swing Clamp on a Tombstone Fixture

The Swing Clamp rotates 80° away from the workpiece, allowing easy loading and unloading of the part. In this application, the tombstone is mounted on a double pallet machining center. When the pallet rotates, the StayLock Clamp remains clamped. There is no need for an accumulator in the hydraulic system. Nor is there a chance of hydraulic hoses getting tangled or accidentally cut while the part is being machined. StayLock Swing Clamps are available in left-hand or right-hand swing styles.

StayLock Clamps ...the Hydraulic clamp with the mechanical advantage! With conventional power clamping, when pressure is put to the clamp, it clamps... take the pressure away (on purpose or not), it unclamps. With the StayLock Clamp's patented internal locking mechanism, hydraulic pressure is needed to clamp...and to unclamp!

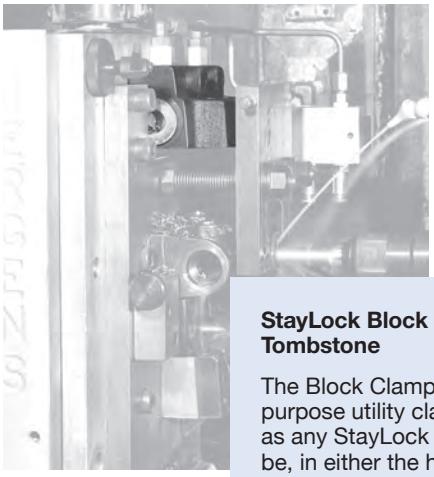

StayLock Block Clamp on a Tombstone

The Block Clamp is a multi-purpose utility clamp, utilized, as any StayLock Clamp can be, in either the horizontal or vertical clamping positions. In this application, the Block Clamp (at the top of the tombstone) is replacing step blocks and tedious manual clamping.

StayLock Rocker Clamp Holding a Die

The Rocker Clamp is ideal for quick change clamping on dies, molds, and fixture plates where a standard height subplate is employed. Because of the unique body design of the Rocker Clamp, it can easily be adapted with a T-slot nut mounted on the bottom. This enables the Rocker Clamp to slide in and out, making part removal easier, plus it allows for various widths of subplates or fixture plates to be used.

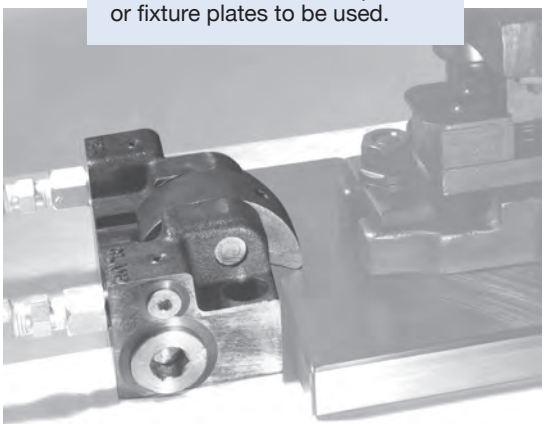

Staylock Clamps

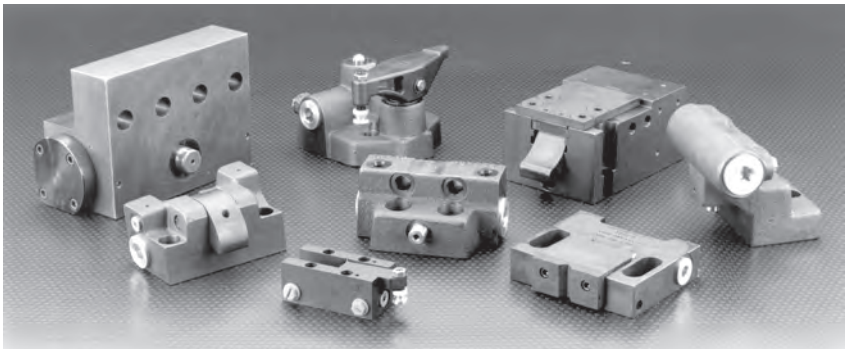

Positive Mechanical Lock

Jergens StayLock Clamps offer a breakthrough in clamping flexibility! These mechanically locked clamps are activated and released by hydraulic pressure. Once activated, the clamps automatically lock and will not release until hydraulic pressure is applied to the release port.

Once clamped, you can:
- disconnect your hydraulic power source
- move the fixture, with the part still clamped, to other machines
- not worry about your part unclamping due to hydraulic power failure, a cut line, or leaks in the hydraulic system

Patented positive mechanical lock minimizes:
- reclamping
- set-up costs
- parts accidentally becoming unclamped

Jergens StayLock Clamps can provide solutions to many clamping problems. They are designed for use on:
- palletized fixtures
- transfer machines
- machining centers
- any power clamping application
- quick change on molds and dies

Use the StayLock Clamps with Jergens Air-Operated Hydraulic Pumps (described on pages 183–184). One Hydraulic Pump can service several machines because there is no need to maintain hydraulic pressure when clamping StayLock Clamps. Once StayLock Clamps are in a clamping position, the hydraulic hoses can be disconnected, and the part will remain clamped indefinitely. Once the machining cycle is completed, applying hydraulic pressure to the release port unclamps the part.

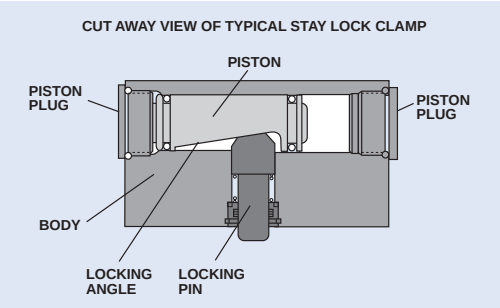

Most Commonly Asked Questions

Q. Does the StayLock Clamp lose pressure?

A. No, it does not. Because of a patented mechanical lock, a positive locking wedge is activated when pressure is applied to the clamp port. There is no need to maintain hydraulic pressure; therefore, the power source can be disconnected. There is no pressure to lose.

Q. How do I lock StayLock Clamps in place?

A. Applying hydraulic pressure to the clamp port of a StayLock Clamp drives two internal wedges together. The two wedges form a mechanical lock and will not retract until hydraulic pressure is applied to the release port.

Q. Can these clamps be used with air?

A. No. Air pressure does not apply enough force to lock or unlock the internal wedge mechanism.

Q. How much hydraulic pressure is needed to activate the clamps?

A. The minimum pressure required on most of the StayLock Clamps is 500 psi. The minimum and maximum pressure requirements are specified for each clamp on the following pages.

Q. What is needed to set up a hydraulic system using StayLock Clamps?

A. Typically, a system includes several clamps (depending on individual requirements); a power source; a four-way, three-position, zero-leakage control valve (see page 186); and hydraulic hose and fittings. There is no need for an accumulator in the system.

Q. Can an air/oil booster be used with StayLock Clamps?

A. No. Boosters typically are used with standard hydraulic clamps because pressure is needed to activate and maintain the clamp in the clamping position. With a Booster set-up, there is only one hydraulic line that provides the pressure needed. StayLock Clamps need pressure to clamp and unclamp; therefore, a Booster would not provide the needed pressure to the release port to unclamp the part.

Q. Can I get technical assistance from Jergens when designing a StayLock Clamping system?

A. Yes. Jergens will assist you by providing a CAD schematic drawing of your system, including all of the part numbers needed to order the system.

For assistance, call 1-877-426-2504.

Staylock Clamps

Die/Mold Clamps

Four models of Die/Mold Clamps are available. Part number 62801 provides 4000 lbs. of output pressure. It is only available in the T-Slot mounting style. The T-Slot mount allows the clamp to be mounted on a machine base via a T-Slot nut, thus allowing the clamp to slide to and from the workpiece. Part number 62802 provides 10,000 lbs. of clamping force. It employs standard mounting bolts for permanent mounting to the machine base, subplate, or fixture plate. Part number 62803 also provides 10,000 lbs. of clamping force. This clamp is provided with a Sensor Interlock which, when wired to a control panel, indicates whether the clamp is locked or not. Sensor Interlocks are available as an accessory for part numbers 62801 and 62802. Part number 62804 is similar to part number 62802, except it has a greater clamping range. It does not have mounting holes for the Sensor Interlock. Die/Mold Clamps are available with Viton® seals for high temperature applications.

Ideal for:

- Injection molding machines
- Die casting machines
- Punch presses
- Machining centers

U.S. Patents:
No. 4,511,127
No. 4,471,293

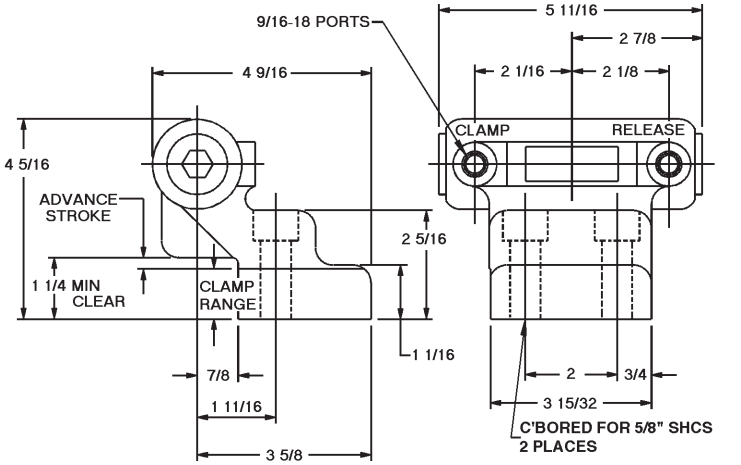

Part Number
62802

Part Number
62803 with Sensor Interlock

Specifications

Part Number	62801	62802	62803	62804
Operating Volume (cu. in.)	1	1	1	1
Min Operating Pressure (psi)	500	500	500	500
Max Operating Pressure (psi)	2000	5000	5000	5000
Force to Pressure Ratio	2:1	2:1	2:1	2:1
Clamping Range (in.)	1.03/.95	1.03/.95	1.03/.95	1.15/.97
Max Output Force (lbs)	4000	10000	10000	10000
Weight (lbs)	9.5	9.5	9.5	9.5

- Available in Fixture Pro® Design Software

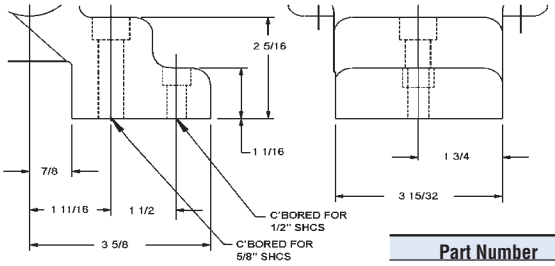

Part Number
62801 T-Slot Style

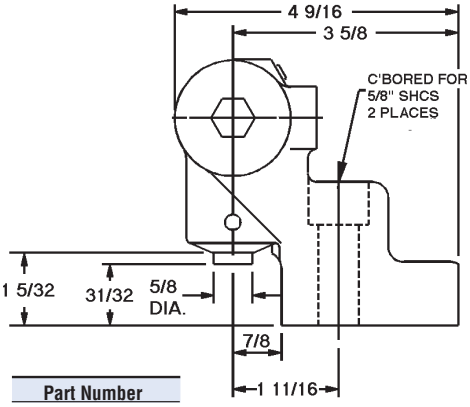

Part Number
62804

Inch to metric fittings available – see page 199.

Staylock Clamps

Die/Mold StayLock® Clamp Applications

Punch Press

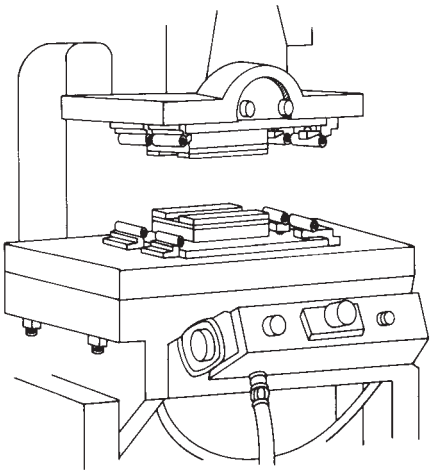

The Die/Mold Clamp is mounted (either permanently, or by using T-Slots) on the injection molding machine platen. The mold is mounted on subplates. By standardizing on subplates with the same height and width, several different molds can be used on one injection molding machine. The mold is lowered into the machine, the Die/Mold Clamps are activated, hydraulic connections are removed, and the job is run. A Sensor Interlock can be added to indicate to the operator that the Die/Mold Clamp is clamping. If molds are used that have a clamping slot, either a StayLock Retractable Clamp or a StayLock Rocker Clamp can be used.
Die/Mold Clamps are mounted on the Punch Press table either permanently or by using T-Slots. The top and bottom dies are slid into place, hydraulic connections are removed and the job is run.

At changeover time, the hydraulic quick disconnect fittings are reconnected, the die is removed and replaced with the next die, and the process is repeated. In some applications on punch presses, the Die/Mold Clamp may create a shut height problem. If this is the case, the StayLock Rocker Clamp is an excellent substitute.

Injection Molding Press

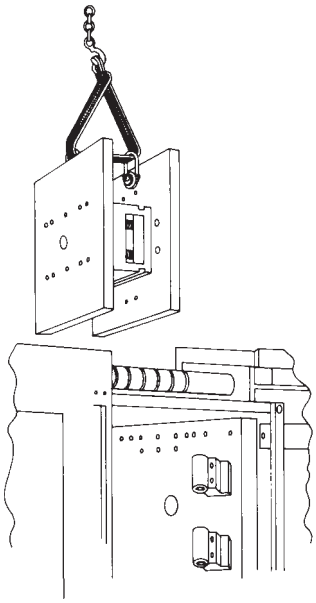

Sensor Interlock

- Available in Fixture Pro® Design Software

The Sensor Interlock (62816) can be mounted on the Die/Mold Clamp and is used to indicate that the clamping piston is engaged or disengaged. Because of the minimal movement of the clamping piston, some applications may require more than a visual method of determining if the Die/Mold Clamp is in the clamping position. The Sensor Interlock is a normally open, 110 volt, 6 amp switch. It is supplied with a six foot long wire and mounting hardware to mount in the control panel of a machine. The switch contacts on the Sensor Interlock will only close when the clamping piston is within the clamping range of the Die/Mold Clamp. It is included with Part Number 62803.

Part Number
62816

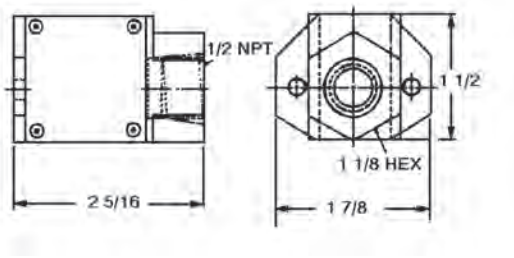

Jergens
WORKHOLDING SOLUTIONS GROUP

Staylock Clamps

Large Capacity Mold Clamp

The Jergens Large Capacity Mold Clamp is used on molding machines and wherever heavy clamping forces are required. It has a clamping force of 28,000 lbs. The clamp can be mounted either individually or in series on a manifold.

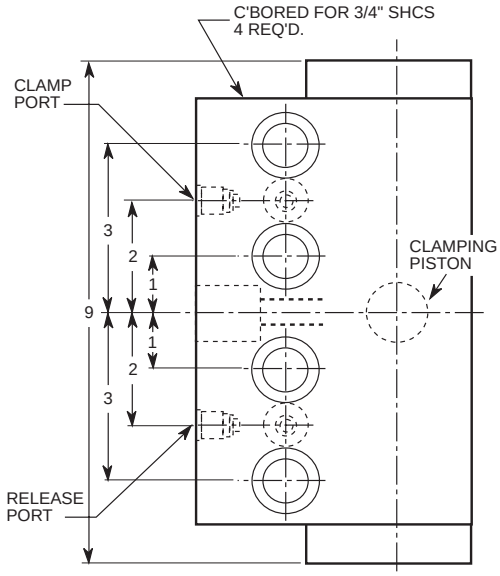

Specifications

Part Number	62806
Operating Volume (cu. in.)	7
Minimum Operating Pressure (psi)	500
Maximum Operating Pressure (psi)	3500
Force to Pressure Ratio	8:1
Clamping Stroke	.38
Maximum Output Force (lbs.)	28,000
Weight (lbs.)	43

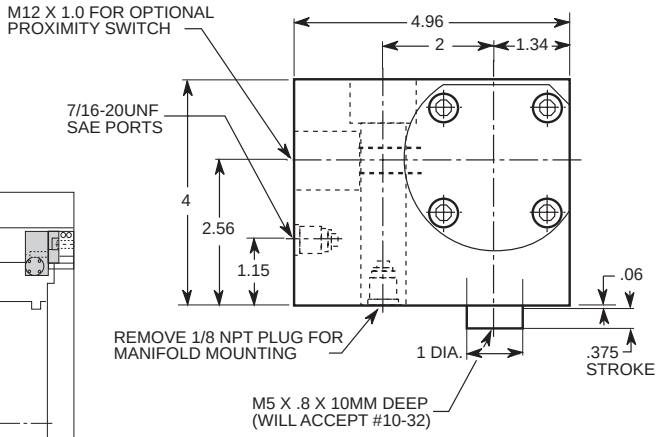

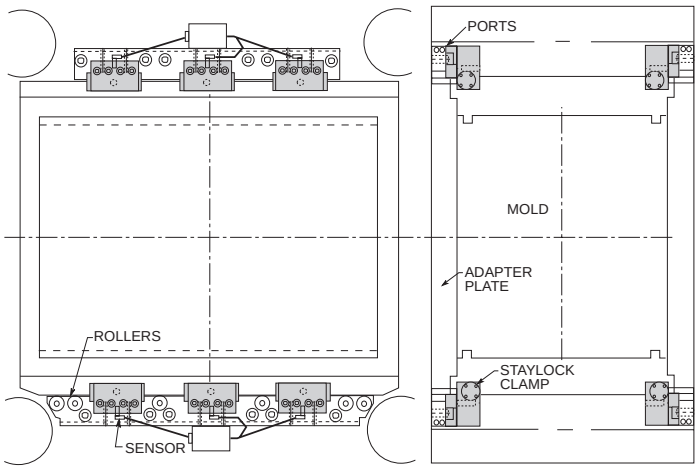

Typical StayLock Manifold Layout on Injection Molding Machine

Part Number
62817

Proximity Switch

The Proximity Switch indicates the clamp's piston position. A single switch is required for each Large Capacity Clamp. Stainless steel construction with 16' cord, 10-30 VDC.

Inch to metric fittings available – see page 199.

Staylock Clamps

Retractable Clamps

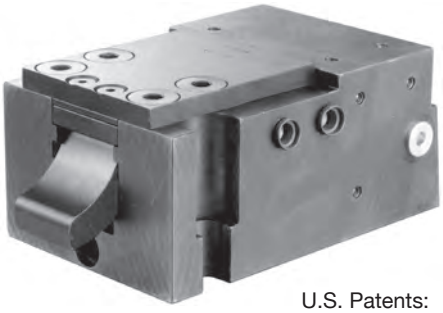

U.S. Patents:
No. 4,511,127
No. 4,471,293

Jergens StayLock Retractable Clamps are designed to allow quick change of molds in injection molding machines and die casting machines. The locking arm, which retracts into the clamp body for easy loading and unloading of a mold, is adaptable to clamp many standard mold slots. The Retractable Clamp is double acting and includes alternate clamp and release ports for easier hydraulic plumbing set-up. A Proximity Switch, which indicates the Retractable Clamp is in the extended or retracted position, is also available (see below).

High temperature version available, contact Technical Sales for more information

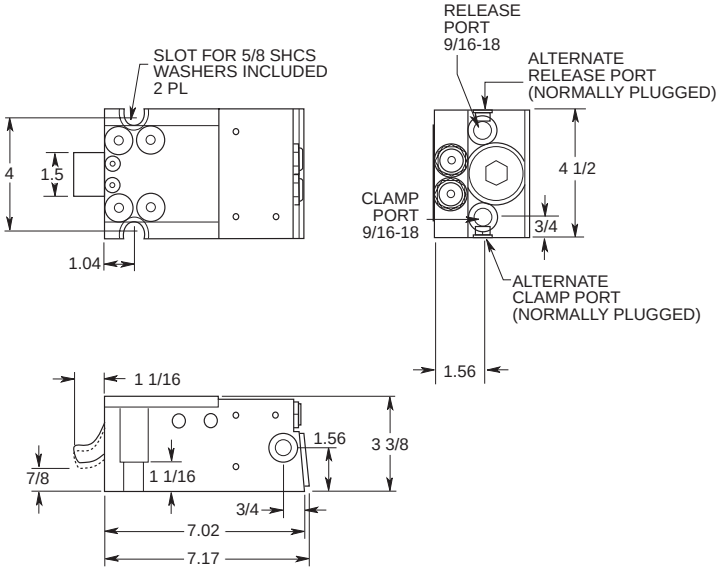

Specifications

Part Number	62852
Operating Volume (in³)	1.6
Minimum Operating Pressure (psi)	500
Maximum Operating Pressure (psi)	2500
Force to Pressure Ratio	2:1
Clamping Stroke	.13
Maximum Output Force (lbs.) @ 2500 (psi)	5000
Weight (lbs.)	23

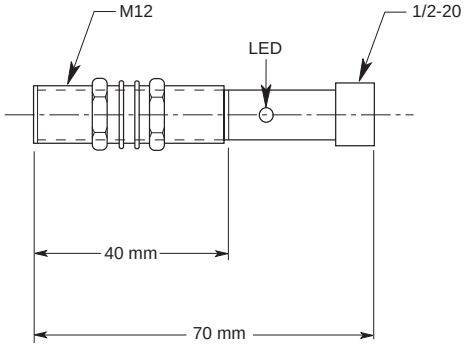

Proximity Switch

The Proximity Switch senses the position of the clamping arm within the Retractable Clamp. Two Proximity Switches are required for each clamp. They have a stainless steel housing and are mounted in the Retractable Clamp. One Switch senses the arm extended; the other, the arm retracted. A sixteen foot cord is included with each Proximity Switch, 35-250 VAC.

Part Number
62857

Inch to metric fittings available – see page 199.

Jergens
WORKHOLDING SOLUTIONS GROUP

Staylock Clamps

Rocker Clamps

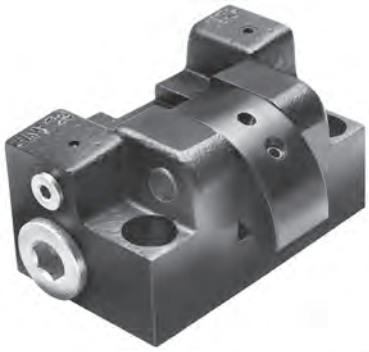

Part Number
62841

U.S. Patents:
No. 4,511,127
No. 4,471,293

Part Number
62842

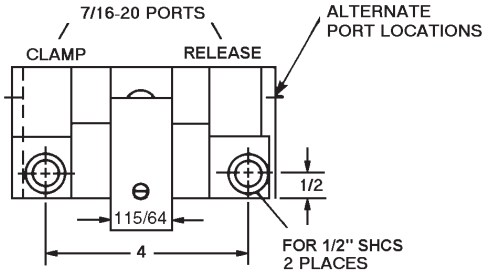

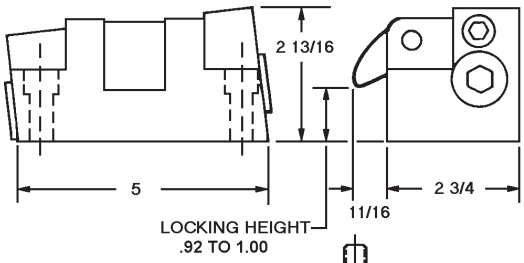

Part Number
62841

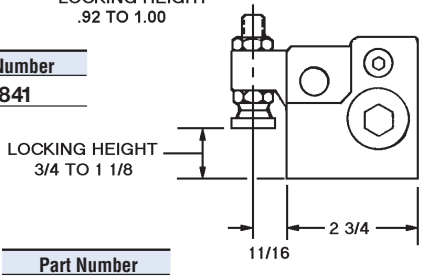

Part Number
62842

Inch to metric fittings available – see page 199.

Compact design and dual mounting capability make the Jergens StayLock Rocker Clamp versatile for many applications. The Rocker Clamps come in two styles. Part number 62841 is typically used with standard height subplates upon which the die, mold, or fixture plate is mounted. Part number 62842 has an adjustable spindle which adapts to the height of the workpiece. Both styles of Rocker Clamps have drilled and tapped holes on the bottom of the clamp for mounting T-Slot nuts for use on slotted tables. This method of mounting allows the operator to slide the clamp to and from the workpiece for easier part loading and unloading. Bolt down mounting holes are also provided. For mounting applications, contact the Jergens Technical Sales Department.
Ideal for:

- Holding dies on punch presses
- Molds on injection molding machines
- Dies on die casting machines
- Use on hydraulic fixtures
- Available in Fixture Pro® Design Software

Specifications

Part Number	62841	62842
Operating Volume (cu. in.)	.67	.67
Minimum Operating Pressure (psi)	500	500
Maximum Operating Pressure (psi)	2,000	2,000
Force to Pressure Ratio	1.9:1	1.9:1
Clamping Range (in.)	.92 to 1.00	.10*
Maximum Output Force (lbs.) @2,000 psi	3,800	3,800
Weight (lbs.)	7.5	7.6

*After adjustment for height.

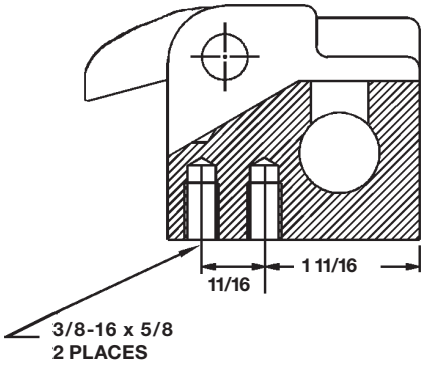

Mounting holes for T-Slot applications.

Staylock Clamps

Mini-Rocker Clamps

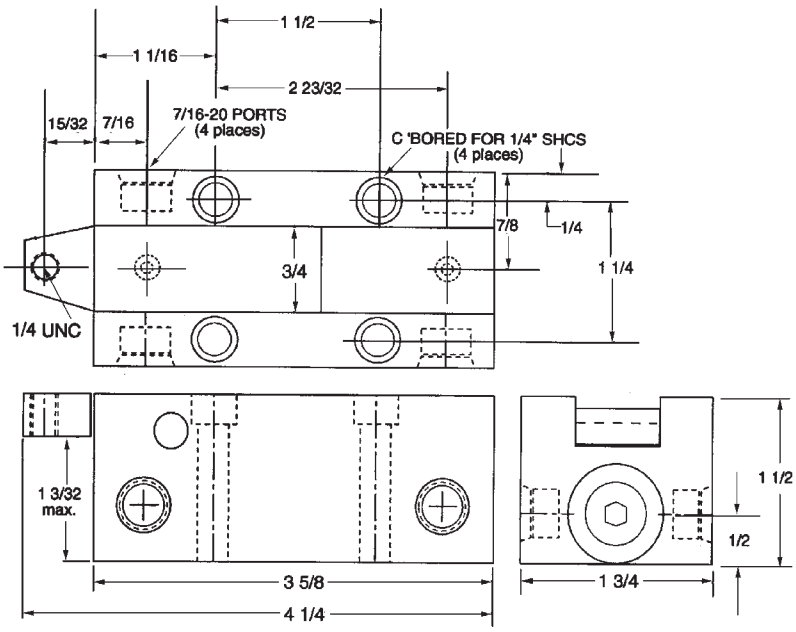

The StayLock Mini-Rocker Clamp is designed for small parts workholding. Like the other StayLock Clamps, the Mini-Rocker can be mounted at any angle. Clamping forces range from 200 lbs. to 700 lbs. The Mini-Rocker can be used as a single clamp; or because of its unique port arrangement, it can be manifold mounted.

Socket Toggle Screw

Part Number
33302

Set Screw/Jam Nut not included.

See page 246.

Optional Toggle Pad
(Shown in picture)

Part Number
43502

See page 247.

Specifications

Part Number	62845*	62846**
Operating Volume (cu. in.)	.08	.08
Minimum Operating Pressure (psi)	500	500
Maximum Operating Pressure (psi)	3,500	3,500
Force to Pressure Ratio	.2:1	.2:1
Clamping Range	.09	.09
Clamping Force @ 3500 psi	700 lbs	700 lbs
Clamping Force @ 1000 psi	200 lbs	200 lbs
Weight (lbs.)	2.1	2.1

* Includes four plugs & two O-Rings, SAE style, for manifold mounting

** Includes two plugs

Inch to metric fittings available – see page 199.

Staylock Clamps
Block Clamps

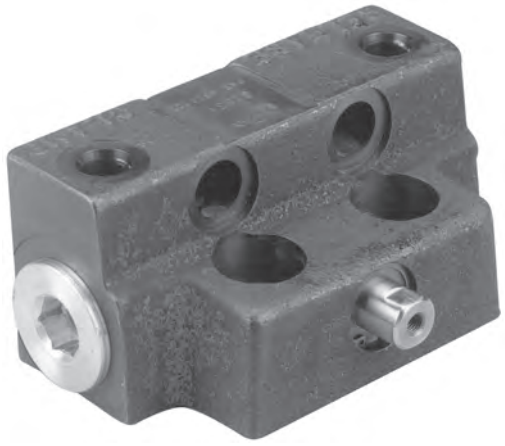

U.S. Patents:
No. 4,511,127
No. 4,471,293

Jergens StayLock Block Clamps are multi-purpose utility clamps designed for many versatile applications. Block Clamps may be mounted for either vertical or horizontal clamping. They may be used with strap clamps or similar workholding devices for maximum adaptability (see illustration below). The Block Clamp plunger has a 1/4 - 28 thread on the I.D. for use with various contact points.

- Available in Fixture Pro® Design Software

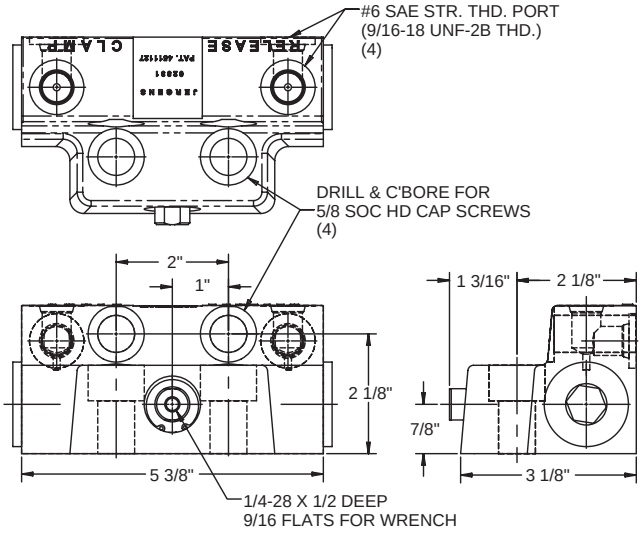

Specifications	Inch
Part Number	**62831**
Operating Volume (cu. in.)	1.1
Minimum Operating Pressure (psi)	500
Maximum Operating Pressure (psi)	5,000
Force to Pressure Ratio	2:1
Clamping Stroke (in.)	.18
Maximum Output Force (lbs.) @ 5,000 psi	10,000
Weight (lbs.)	6.5

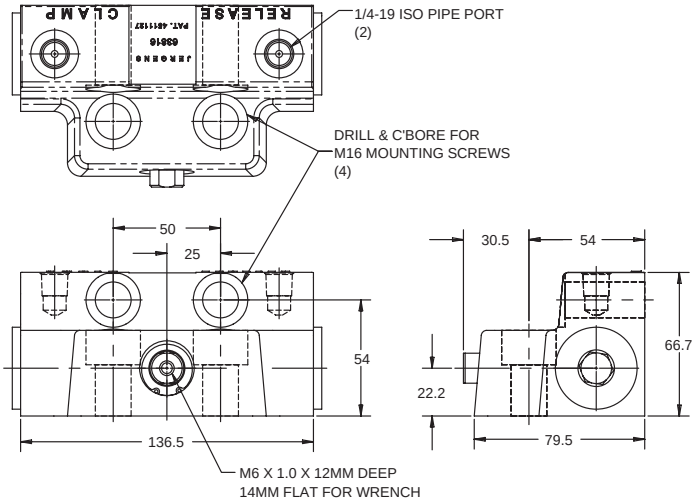

Specifications	Metric
Part Number	**63816**
Operating Volume (cu. cm)	18
Minimum Operating Pressure (kg/cm²)	14
Maximum Operating Pressure (kg/cm²)	350
Force to Pressure Ratio	12.8:1
Clamping Stroke (mm)	4.7
Maximum Output Force (kg) @ 351(kg/cm²)	4,500
Weight (kg)	2.93

Inch to metric fittings available – see page 199.

Staylock Clamps

Toe Clamps

Low Toe Style

Part Number
62811

U.S. Patents:
No. 4,511,127
No. 4,471,293

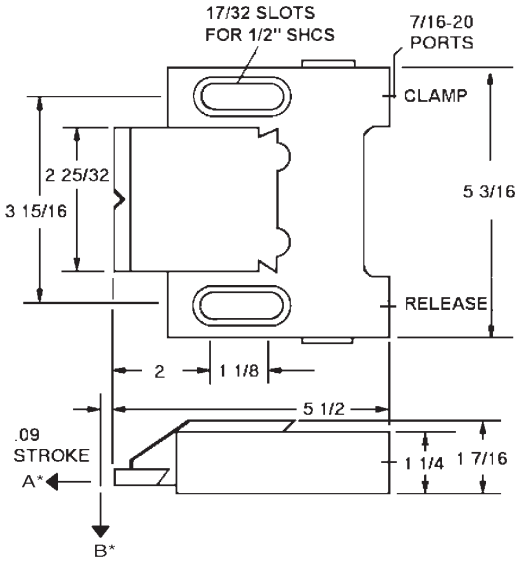

Specifications

Part Number		62811
Part Number		62812
Operating Volume (cu. in.)		.5
Minimum Operating Pressure (psi)		500
Maximum Operating Pressure (psi)		3,000
Hydraulic	Force in Pounds	
Pressure (psi)	A*	B*
1,500	1,200	800
3,000	2,500	1,800
Clamping Stroke		.09
Maximum Output Force (lbs.) @3,000 psi		2,500
Weight (lbs.)		6.7

- Two special washers which prevent damage by the cap screws are included with each toe clamp. To order washers separately, order Part Number 60636.
- Toe is moved back by spring.
- Available in Fixture Pro® Design Software

Jergens StayLock Toe Clamps are designed for edge gripping of parts when the clamp height must be kept at a minimum, such as in a milling operation. They are available in Low Toe (62811) or High Toe (62812) styles.

Toe Clamps provide two directional clamping forces: one pushes the workpiece against a positive stop, the other pushes it down against the table or fixture. A brass or steel insert is available on the low toe style Toe Clamp. The inserts must be ordered separately.

IMPORTANT: Jergens 62811 Toe Clamp is supplied without toe insert. Please order one of the inserts below.

Part Number	Insert
60633	Steel
60632	Brass

High Toe Style

Part Number
62812

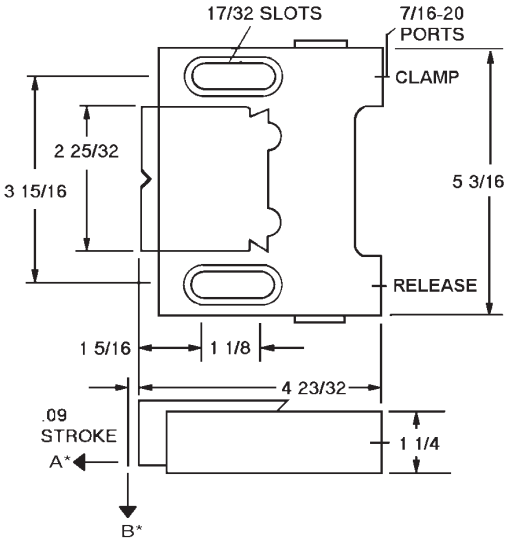

Inch to metric fittings available – see page 199.

Staylock Clamps

Swing Clamps (Metric)

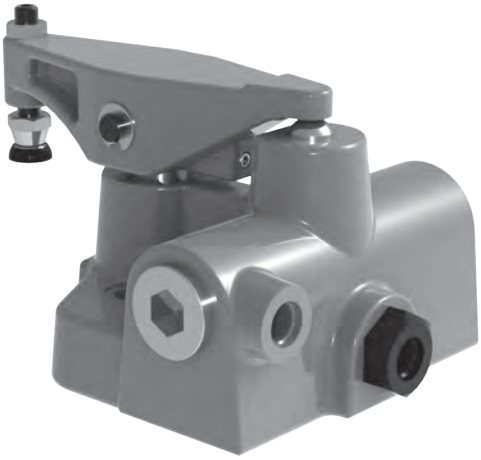

U.S. Patents:
No. 4,511,127
No. 4,471,293

Specifications

Part Number (Right Swing)	63801
Part Number (Left Swing)	63802
Operating Volume (cm^3)	20.5
Minimum Operating Pressure (bar)	6*/7
Maximum Operating Pressure (bar)	200
Force to Pressure Ratio	8.5:1
Clamping Stroke (mm)	5.5
Maximum Output Force (kN) @ 200 bar	18
Effective Piston Area (cm^2)	8.6
Weight (kg)	5.5

*5.4 bar to swing, 7 bar to clamp.

Jergens StayLock Swing Clamps are designed to be used when accessible loading and unloading of a workpiece is required. The clamping arm rotates 80° away from the workpiece. The Swing Clamp operates in any position and is sealed so it can be used with coolant applications.

Important: When using the High Volume Air-Powered Hydraulic Pumps (61761 and 61762), the Flow Limit Valve (shown below) must be used to limit the flow of hydraulic oil going to the clamp port of the Swing Clamp. This will extend the life of the clamp by minimizing the clamp arm from slamming into the clamping position.

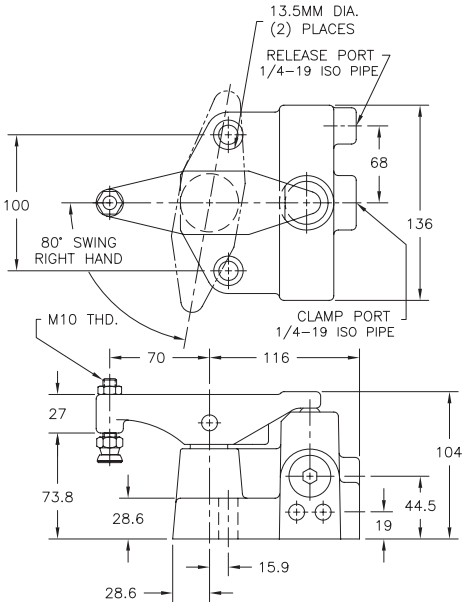

CLAMP ARM HAS 5.5MM OF VERTICAL TRAVEL

The Flow Limit Valve restricts the flow of oil to dampen the rotating action of the Swing Clamp. It is recommended that the Flow Limit Valve be used with the High Volume Air-Powered Hydraulic Pump (61761 or 61762). It is not needed with the lower volume “Shoebox” Pumps (61755 or 61756).

Flow Limit Valves

Part Number
63603

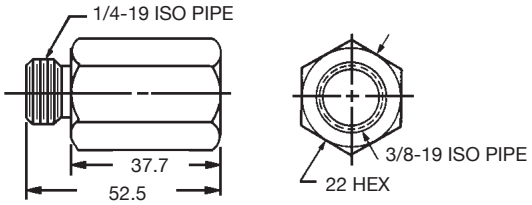

- Available in Fixture Pro® Design Software

Staylock Clamps

Swing Clamps

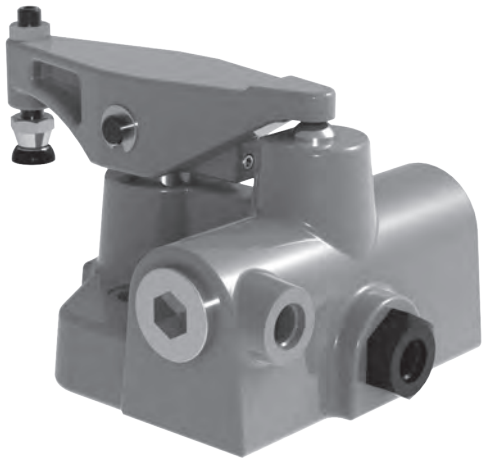

U.S. Patents:
No. 4,511,127
No. 4,471,293

Specifications

Part Number (Right Swing)	62823
Part Number (Left Swing)	62824
Operating Volume (cu. in.)	1
Minimum Operating Pressure (psi)	80*/300
Maximum Operating Pressure (psi)	3,000
Force to Pressure Ratio	1.3:1
Clamping Stroke (in.)	.18
Maximum Output Force (lbs.) @ 3,000 psi	3,900
Weight (lbs.)	11

*80 psi to swing, 300 psi to clamp.

Jergens StayLock Swing Clamps are designed to be used when accessible loading and unloading of a workpiece is required. The clamping arm rotates 80° away from the workpiece. The Swing Clamp operates in any position and is sealed so it can be used with coolant applications.

Important: When using the High Volume Air-Powered Hydraulic Pumps (61761 and 61762), the Flow Limit Valve (shown below) must be used to limit the flow of hydraulic oil going to the clamp port of the Swing Clamp. This will extend the life of the clamp by minimizing the clamp arm from slamming into the clamping position.

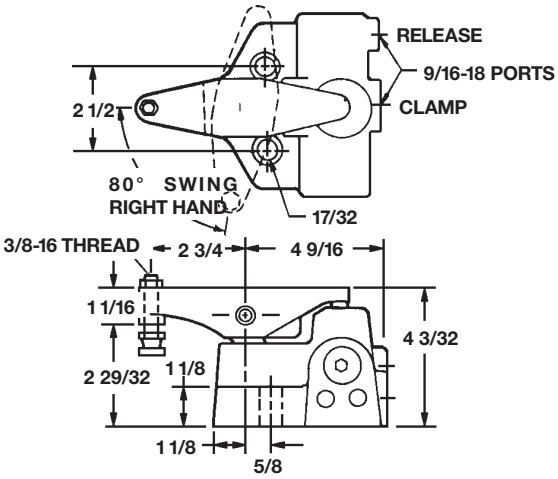

Clamp Arm Has 3/16" Of Vertical Travel

The Flow Limit Valve restricts the flow of oil to dampen the rotating action of the Swing Clamp. It is recommended that the Flow Limit Valve be used with the High Volume Air-Powered Hydraulic Pump (61761 or 61762). It is not needed with the lower volume "Shoebox" Pumps (61755 or 61756).

Flow Limit Valves

Part Number
61648

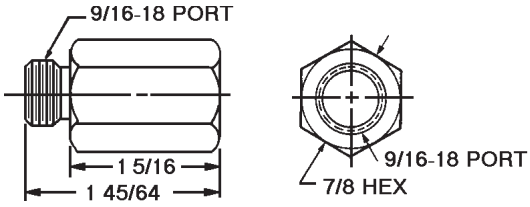

- Available in Fixture Pro® Design Software

Pre-Fill Boosters

Patent No. 3839866

- **Self Bleeding**
- **Easy View Reservoir**
- **15:1, 30:1, and 54:1 Boost Ratios**

These units offer many more advantages than conventional boosters, while maintaining the same basic simplicity. The pre-fill booster has two automatic cycles. The first cycle pre-fills the work circuit using low pressure with a large reservoir to provide volume. The second cycle then automatically provides high pressure, as needed. These units also provide automatic bleeding of the work circuit. This self-bleeding feature negates the need to "bleed the lines" after it is set up.

The pre-fill booster is ideal for any general use production system requiring maximum efficiency with minimum effort! Pre-fill boosters must be used in the upright (vertical) position.

- Installation Kits Available. See page 180.
- See page 177 for Rapid Exhaust and Rapid Advance Kits, Handles, and Mounting Bases.

Specifications

Part Number	61704	61705	61706
Reservoir Capacity (cu. in.)	50	50	55
High Pressure Volume (cu. in.)	7 1/2	3 3/4	2
Minimum Input (psi)	40	40	40
Maximum Input (psi)	125	125	75
Boost Ratio	15:1	30:1	55:1
Maximum Output (psi)	1875	3750	4100
Weight (lbs.)	28	28	28

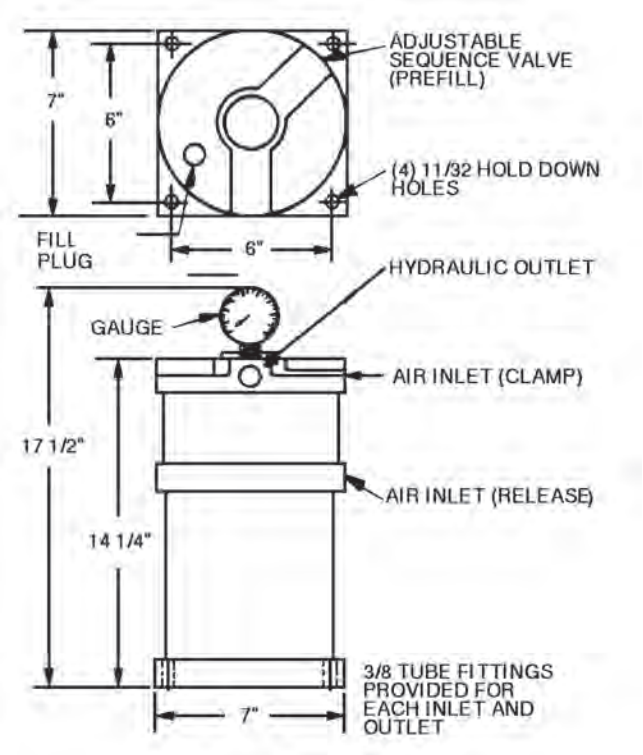

Inch to metric fittings available – see page 199.

Boosters

Circuit Diagrams

Graphic

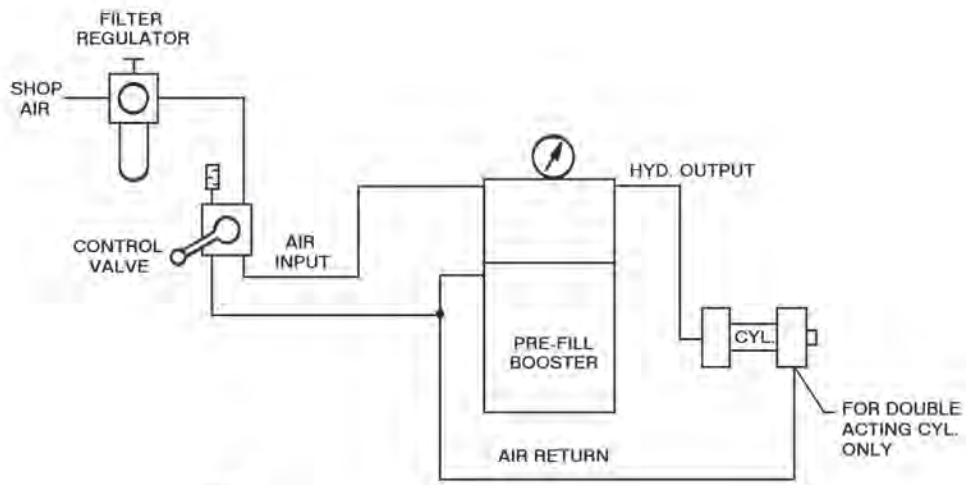

Schematic

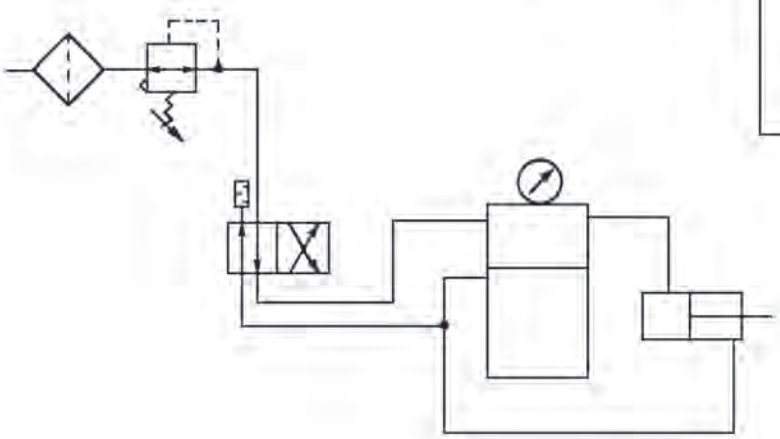

Accessories

Rapid Exhaust and Advance Kits

Rapid Exhaust Part Number	Rapid Advance Part Number
62214	62215

These kits include everything needed to convert a standard Pre-Fill Booster to high speed operation. Fittings, pre-bent tubing, and the quick exhaust valve are included.

Valve Only
61641

Handle

Part Number
62621

Convert your Pre-Fill Booster to a portable power source. The 62621 handle is for use when the hydraulic gage is mounted on the top of the booster.

Standard Boosters

Standard Boosters are ideal for permanent fixtures, special machines or O.E.M. applications.

The volume of oil available to operate the work circuit depends upon the high pressure capacity of the booster. Work circuits using standard boosters require manual bleeding.

- Easy to view reservoir
- 15:1 and 30:1 boost ratios
- May be mounted vertically or horizontally

Specifications

Part Number	61709	61710	61711
Reservoir Capacity (cu. in.)	15	15	18
High Pressure Volume (cu. in.)	4	7 1/2	3 3/4
Minimum Input (psi)	20	20	20
Maximum Input (psi)	125	125	125
Boost Ratio	15:1	15:1	30:1
Maximum Output (psi)	1875	1875	3750
Weight (lbs.)	20	24	22
Height (H)	10 7/16	14 7/16	14 7/16

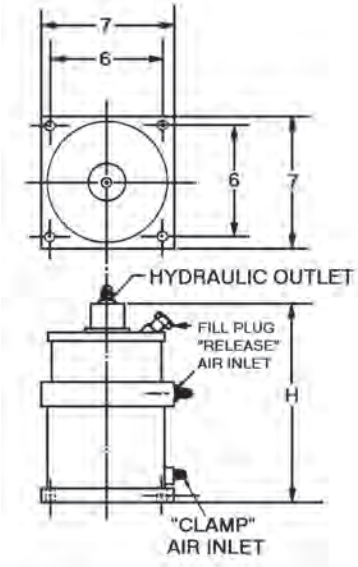

3/8" TUBE FITTING PROVIDED FOR EACH INLET AND OUTLET PORT.

Accessories

Mounting Bases

Part Number
60973

Base 60973 can be used to mount Jergens Boosters 61709 thru 61711 in a horizontal position.

Rapid Exhaust Kit

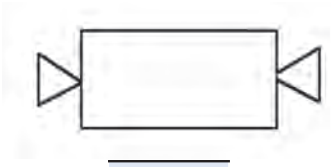

Part Number
62215

The Rapid Exhaust Kit includes a valve, muffler, and fittings needed to convert Booster numbers 61709 thru 61711 to high speed operation.

Valve Only
61641

Installation Kits See page 180

Inch to metric fittings available – see page 199.

High Pressure/Volume Boosters

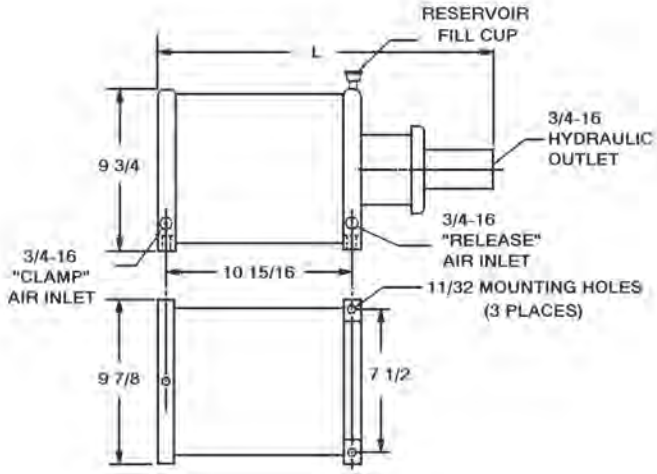

- Available in 26:1, 37:1, and 64:1 boost ratios.
- High output pressure
- High pressure volume

Unit must be used only in the **horizontal position**

Specifications

Part Number	61720	61721	61722
Reservoir Capacity (cu. in.)	17	17	17
High pressure Volume (cu. in.)	12.9	9.1	5.3
Minimum Input (psi)	10	10	10
Maximum Input (psi)	125	125	125
Boost Ratio	26:1	37:1	64:1
Maximum Output (psi)	3250	4625	8000
Length (L)	19 11/16	19 5/8	19 1/2
Weight (lbs.)	28	28	28

Circuit Diagrams

GRAPHIC

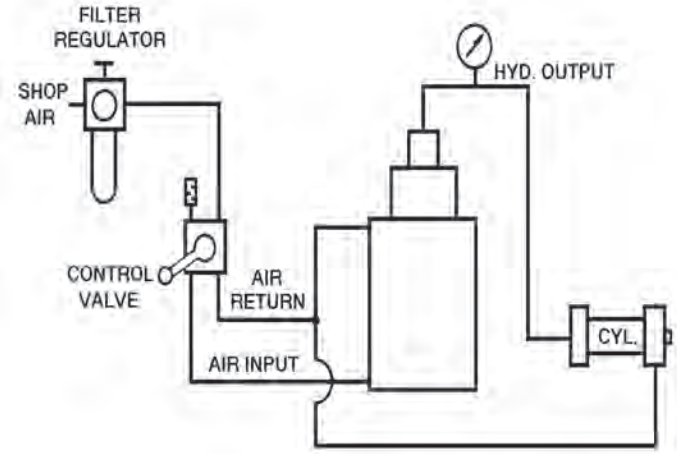

SCHEMATIC

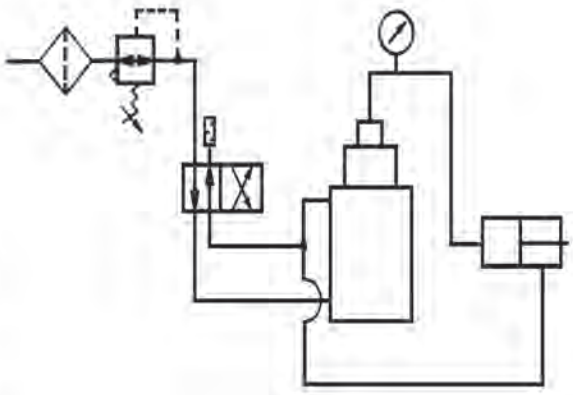

Inch to metric fittings available – see page 199.

Boosters Installation Kits

Jergens offers four kits to simplify the installation of your Jergens booster. The kits may be used with any Jergens booster.

62203 — This kit is recommended for most applications. The kit includes everything needed to connect your air line to the booster and everything needed to connect the booster to your fixture.

62204 — This kit should be used when the protection of a pilot check valve is not required, as in punching or staking applications.

62205 — This kit is the same as kit 62203 except the hand valve has been eliminated. Use this kit when the system will be activated by a foot valve, solenoid or pilot operated valve.

62206 — This kit should be used for punching or other applications where no check valve is required and the system will be activated by a foot valve.

				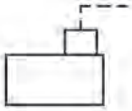			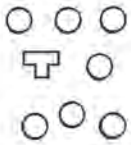
Filter/ Regulator 61617 (1)	4-Way Hand Valve 61615 (2)	Muffler 62613 (3)	Air Hose (18 Ft.) 61108 (4)	Pilot Check Valve 61629 (5)	Hydraulic Hose (6 Ft.) 61205 (6)	Quick Disconnect Couplings 61915 61965 (7)	Fittings as Req'd. (8)
See page 189	See page 190	See page 189	See page 200	See page 194	See page 200	See page 200	

Selection Data

Part Number	Items Included In Kit
62203	1, 2, 3, 4, 5, 6, 7, 8
62204	1, 2, 3, 4, 6, 7, 8
62205	1, 3, 4, 5, 6, 7, 8
62206	1, 3, 4, 6, 8

Jergens recommends the use of a gage kit with any standard booster.

Gage Kit

Part Number	PSI
60711	3000 psi
60712	6000 psi
60713	10000 psi

3 Second Clamping Kit

To simplify the installation of Jergens power clamps, Jergens offers its 3 SECOND Clamping Kit. The Kits contain everything required to convert your shop air pressure to hydraulic power for your clamping fixture.

61717 —This kit contains a 61711 booster, control valve, gage, hoses and fittings. This kit should be used for fixtures which will remain on a machine for long periods of time, such as a vise on a milling machine.

61719 —This kit contains a 61705 booster, control valve, filter-regulator, pilot check valve, quick disconnects and all hose and fittings required. This kit should be used on machines where the fixture changes frequently. The 61705 booster eliminates the need to bleed each fixture after it is connected. To change the fixture, simply switch the hydraulic hose from one fixture to the other using quick disconnect fittings.

Selection Data

Part Number	Included in Kit	
	Booster	Accessories*
61717	**61711**	2, 3, 4, 6, 8, 9
61719	**61705**	1, 2, 3, 4, 5, 6, 7, 8
61716	**61710**	2, 3, 4, 6, 8, 9
61718	**61704**	1, 2, 3, 4, 5, 6, 7, 8

*As shown on page 176.

Pre-Fill Power Pacs

Jergens Pre-Fill Power Pacs provide a complete portable power source. Everything required to power and control your hydraulic fixture is included. Connect your shop air to the filter/regulator, and your fixture to the hydraulic hose. The self bleeding feature and the hydraulic quick disconnects (provided) make these units the ideal power sources for job shops and production lines.

- Completely Assembled
- Self Contained
- Portable
- Self Bleeding
- Fast Set-Up

Selection Data

Part Number	Included In Power Pac	
	Booster	Accessories*
61714	**61704**	1, 2, 3, 5, 6, 7, 8
61715	**61705**	1, 2, 3, 5, 6, 7, 8

*As shown on page 176.

Hydraulic Intensifier

This unit is designed to be used on any machine tool with its own hydraulic system where higher pressures are needed. Jergens Intensifiers will pre-fill your circuit at approximately 200 psi maximum. Once the Intensifier sequences over to its high pressure mode, it will deliver one cubic inch of working oil at seven times the input pressure.

Specifications

Part Number	61701
High Pressure Volume (cu. in.)	1
Minimum Input (psi)	50
Maximum Input (psi)	710
Boost Ratio	7:1
Maximum Output (psi)	5000
Prefill (psi) Adjustments	50-200
Weight (lbs.)	4.4

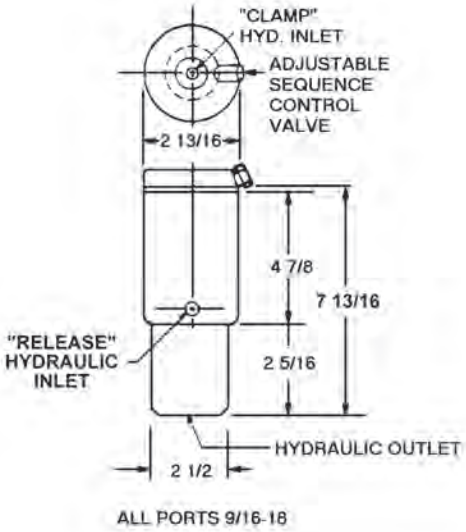

Circuit Diagrams

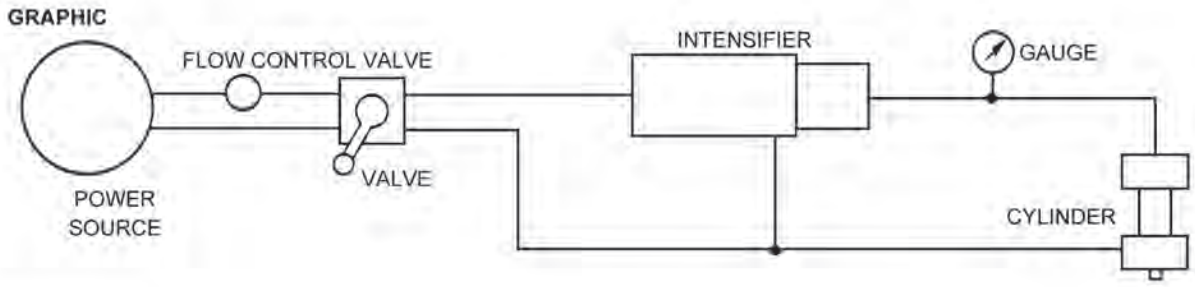

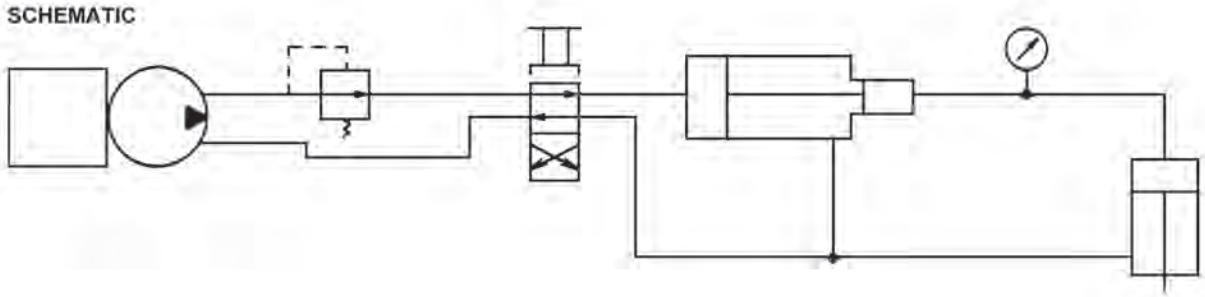

Inch to metric fittings available – see page 199.

Air-Powered Hydraulic Pumps

Shoebox™ Pumps

Jergens Air-Powered Hydraulic Pumps are used as a power source to activate Hydraulic Clamps. Shop air is introduced into the Filter/Regulator and converted to hydraulic pressure. These pumps are available in two styles: the High Volume Pump (61761 and 61762) with Boost Ratios of 20:1 and 50:1 and the standard, more compact "shoebox" pump (61755 and 61756) with Boost Ratios of 36:1 and 71:1. The Air-Powered Hydraulic Pumps are easy to use, energy efficient, versatile and affordable. They are completely self-contained and do not require any external reservoirs or motors.

NOTE: See page 186 for Valve and Subplate options.

The "Shoebox" Pump is a low cost, compact unit used on smaller hydraulic circuits. Its small size offers the versatility of mounting on wheels (such as a workcart) and moving the pump from workstation to workstation. Like the High Volume Pump, this pump allows independent control of multiple workstations.

61755 Performance Curve*

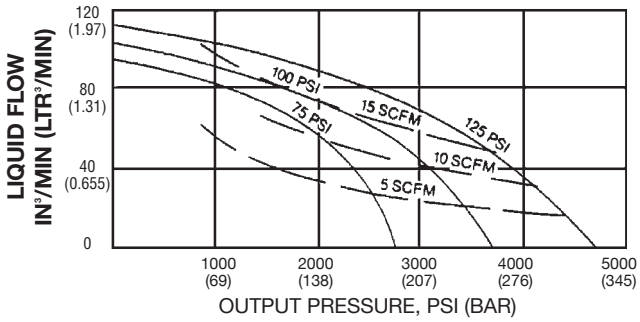

Specifications

Part Number	61755	61756
Reservoir Capacity (cu.in.)	300	300
Minimum Input (psi)	25	25
Maximum Input (psi)	125	85
Boost Ratio	36:1	71:1
Maximum Output	4500	6000
Free Flow (psi) @100 psi (cu.in./min.)	100	50
Weight (lbs.)	24	24

A ten cubic inch accumulator (Part Number 62601) is available to increase the clamping speed if needed. Contact our Technical Sales Department for details.

61756 Performance Curve*

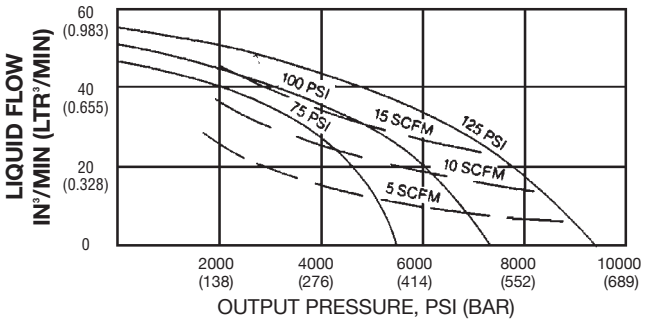

* Air Drive Pressure (SOLID Lines) / Air Drive Flow (DASHED Lines)

Pump Kits

The 61757 Pump Kit includes a 61755 Pump (36:1 Ratio), a 61642 Four-Way, Zero-Leakage Valve, a 61647 Subplate, and a 60703 gauge (6000 psi). The valve, subplate and gauge are supplied mounted on the pump.

The 61758 Pump Kit includes a 61756 Pump (71:1 Ratio), a 61642 Four-Way, Zero-Leakage Valve, a 61647 Subplate, and a 60706 gauge (10,000 psi). The valve, subplate and gauge are supplied mounted on the pump.

Part Number 61757 includes:		Part Number 61758 includes:	
61755	36:1 Pump	**61756**	71:1 Pump
61642	Four-way, zero-leakage valve	**61642**	Four-way, zero-leakage valve
61647	Subplate	**61647**	Subplate
60703	6000 psi gauge	**60706**	10,000 psi gauge

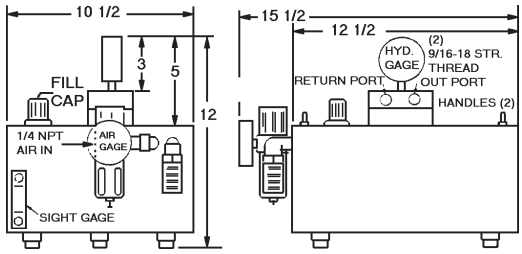

Inch to metric fittings available – see page 199.

Jergens
WORKHOLDING SOLUTIONS GROUP

Air-Powered Hydraulic Pumps
Breadbox™ Pumps

High Volume Air-Powered Hydraulic Pump

The Jergens High Volume Air-Powered Hydraulic Pump converts standard and accessible low pressure shop air to hydraulic pressure up to 5000 psi. These pumps offer large reservoir capacities and allow independent control of multiple work stations. They are designed to provide high volume output throughout the pump's entire pressure range.

Specifications

Part Number	61761	61762
Reservoir Capacity (cu.in.)	440	440
Minimum Input (psi)	40	40
Maximum Input (psi)	125	100
Boost Ratio	20:1	50:1
Maximum Output (psi)	2500	5000
Free Flow @ 100 psi (cu.in./min.)	700	300
Weight (lbs)	100	100

A ten cubic inch accumulator (Part Number 62601) is available to increase the clamping speed if needed. Contact our Technical Sales Department for details.

61761 Performance Curve

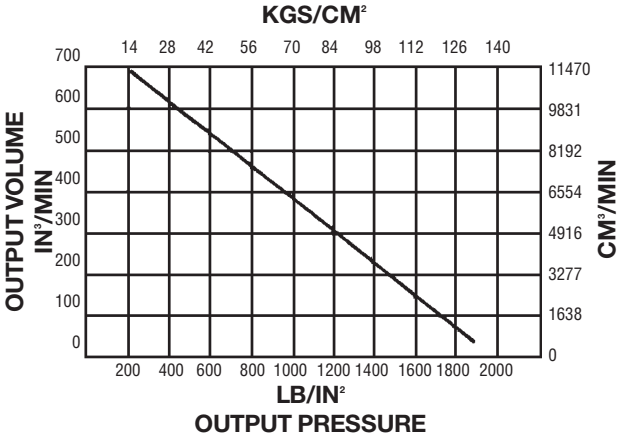

61762 Performance Curve

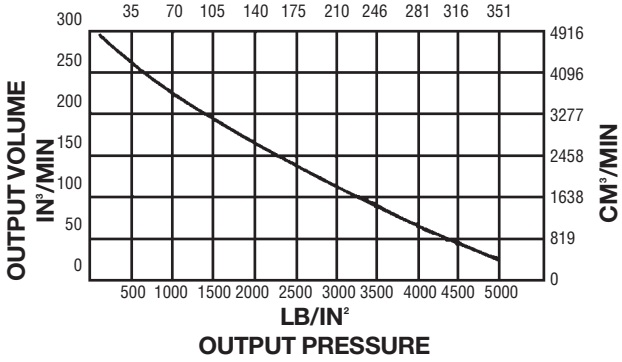

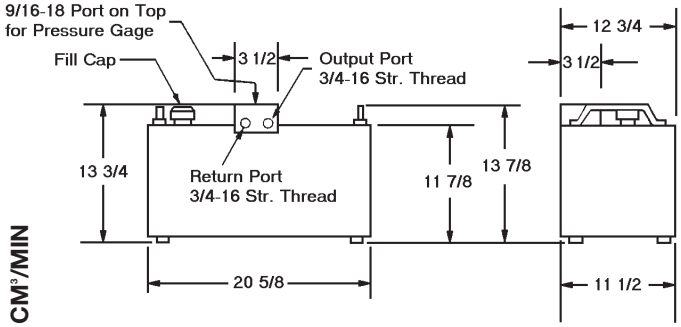

Inch to metric fittings available – see page 199.

Typical Hydraulic Circuit
Application

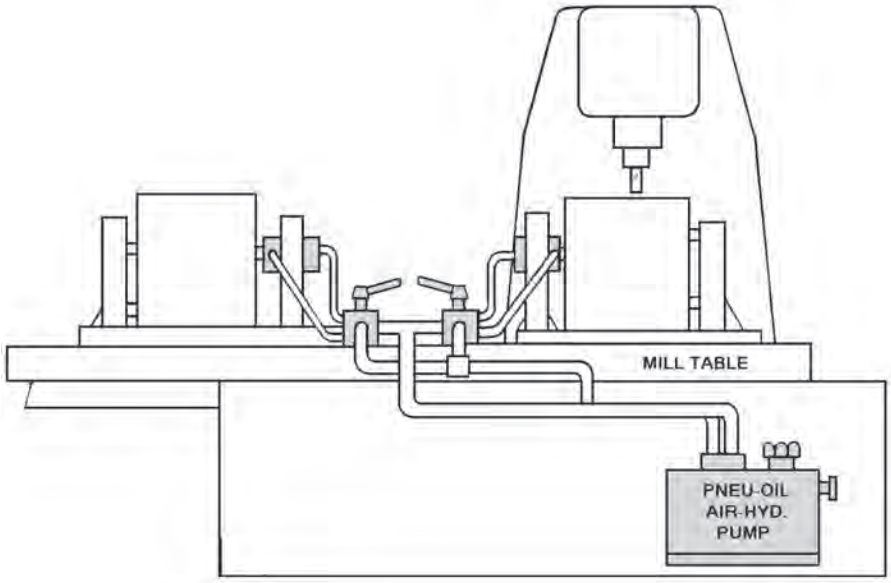

Typical Installation — Two Station Milling Operation

Circuit Diagram

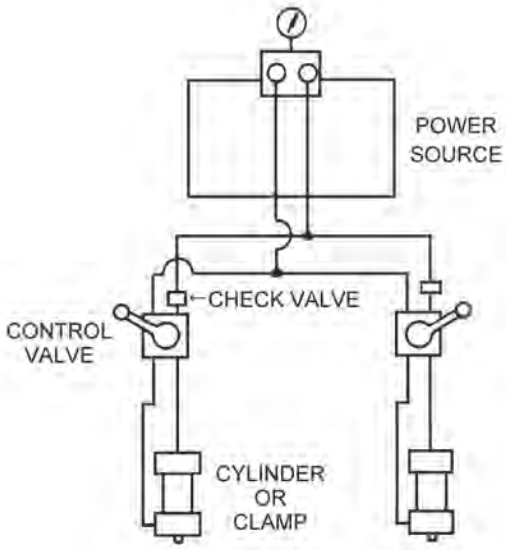

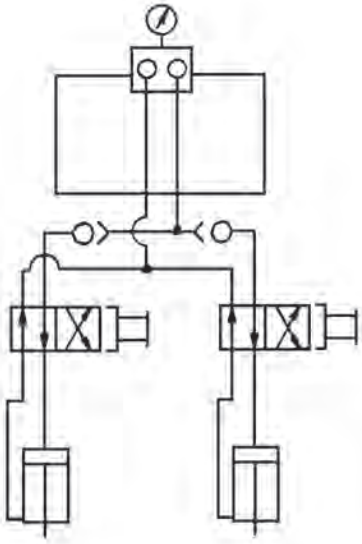

Valves and Subplates for Air Powered Hydraulic Pumps

Zero-Leakage Valve

Part Number
61642

For inline applications, use the 61642 Valve mounted on a 61646 Subplate (Order Part Number 61643). This set-up is also recommended for use with High Volume Air-Powered Hydraulic Pumps (61761, 61762) in StayLock and standard applications. For D03 manifold mounting, directly on the pump, the 61647 Subplate and 61642 Valve are recommended. Because the Jergens Air-Powered Hydraulic Pump provides only the necessary hydraulic pressure to clamp and unclamp the StayLock Clamps, the Four-Way, Zero-Leakage Valve is recommended to prevent the unnecessary running of the pump, thus minimizing pump maintenance and wear.

Subplate for Shoebox Pump

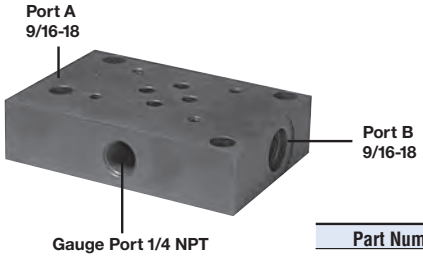

Part Number
61647

- For 61642 (D03 Pad)

Inline Subplate

Part Number
61646

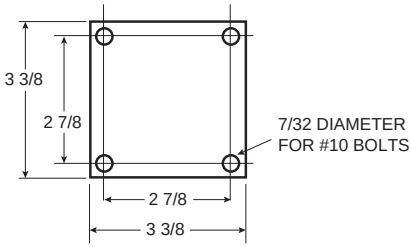

Valve and Inline Subplate Assembly

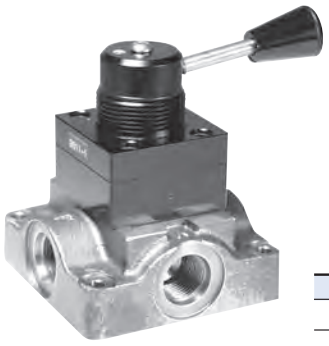

Part Number
61643

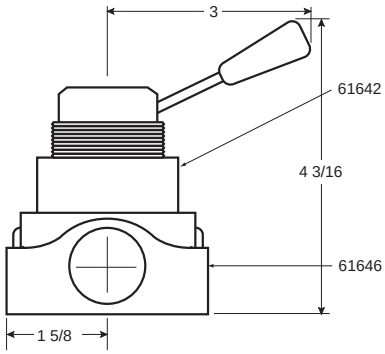

Inch to metric fittings available – see page 199 (except 61642).

Manual Pumps

Application

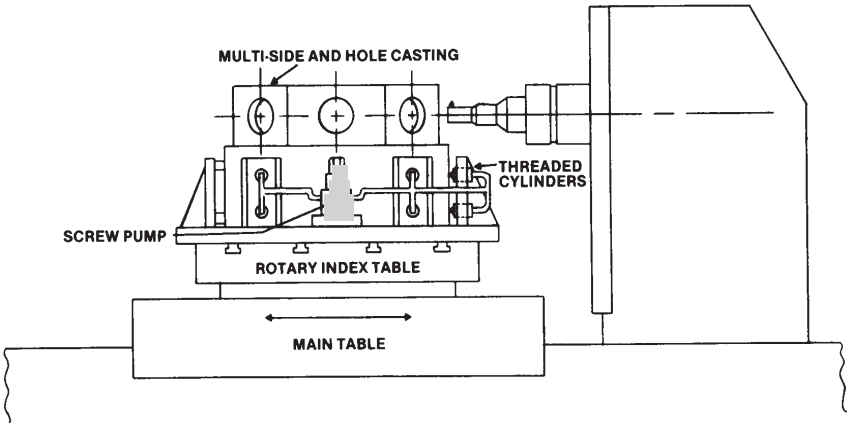

Typical Manual Pump application on a boring mill. The clamping is a self-contained set-up for rotary indexing for large multi-side castings.

Circuit Diagram

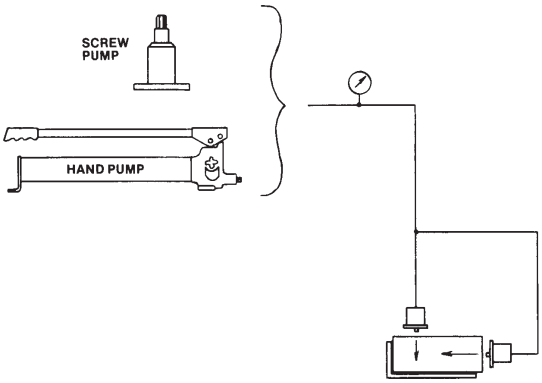

Pallet Decoupler Valve

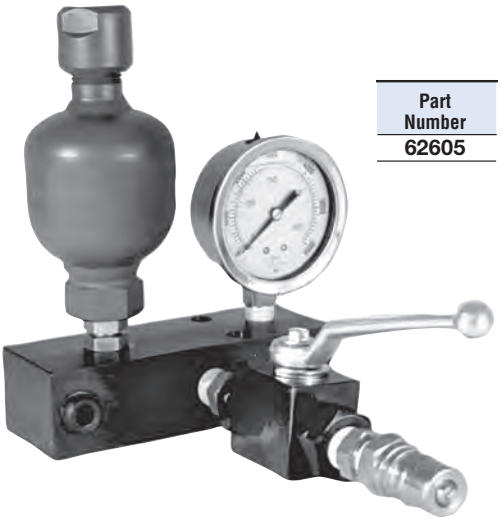

Part Number
62605

The Pallet Decoupler Valve allows hydraulically clamped tooling fixtures to maintain pressure when disconnected from their power source. The built-in pre-charged accumulator maintains pressure within a hydraulic system, compensating for slow leaks. The Pallet Decoupler Valve adds a level of security to fixtures that must be disconnected from a power source while being moved. Ideal for use with palletized fixtures and machining centers.

- Manifold
- Accumulator
- Hydraulic Connections
- Hydraulic Gauge
- Manual Ball Valve

Accumulator

Part Number	Max. Pressure	Pre-Charge Pressure	Volume	Weight (lbs)
62603	3600 psi	1500 psi	5 cu. in.	1.5

*Other Accumulators and pre-charge pressure are available upon request.

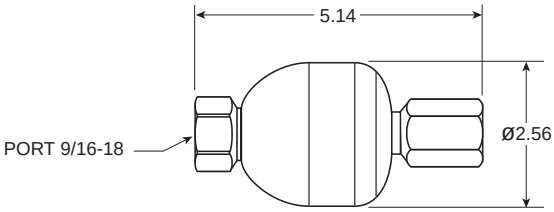

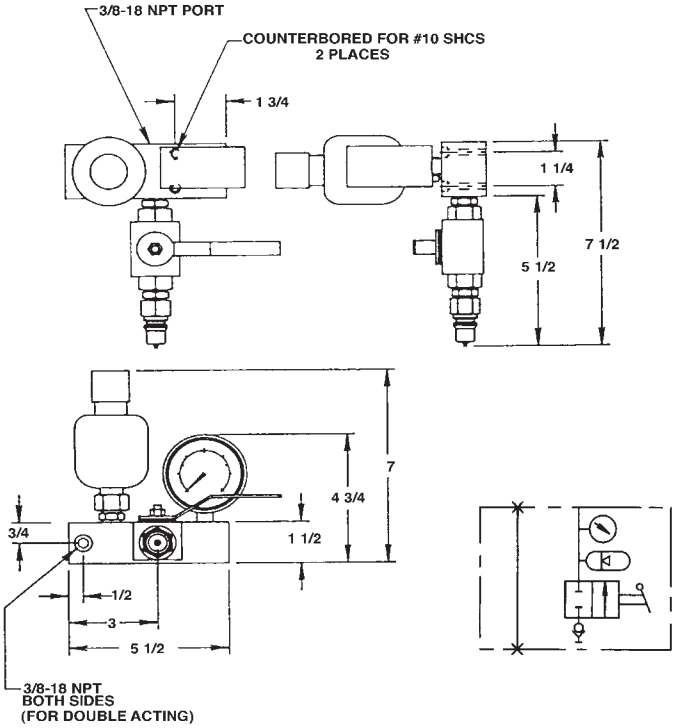

To order components separately

Ball Valve	Male Quick Disconnect	Coupler Sleeve	Hydraulic Gage
61639	61965	61915	60703

Air Circuit Controls

Filter/Regulators

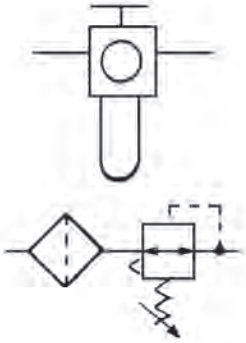

The filter element removes the solid impurities and condensates before the compressed air enters the regulator. The regulator valve supplies a preset pressure regardless of main circuit pressure as long as pressure in the main circuit is higher than that in the secondary.

Specifications

Part Number	61616	61617
Port Size	1/4 NPT	3/8 NPT
SCFM Rating	53 SCFM	80 SCFM
Weight (lbs)	1.6	3.2

Gauges

When sizing a pressure gauge, the maximum output of the system should be approximately 2/3 of the gauge capacity.

Specifications

	160 PSI		
Part Number	60701	60702	60705
Thread Size	1/8 NPT	1/4 NPT	1/4 NPT
Location	Back	Bottom	Back
Weight (lbs)	.16	.25	.25

Mufflers

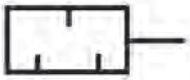

Used to reduce air flow noise. Installation is recommended at exhaust ports of Air Control Valves.

Specifications

Part Number	62612	62613
Thread Size	1/4 NPT	3/8 NPT
Weight (lbs)	.06	.22

Flow Control Valve

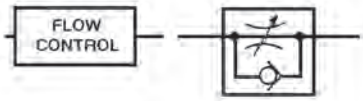

Manually adjusted control of input pressures. Allows the regulation of pressures into a work circuit. Reverse flow is unrestricted. Used for throttling or metering a circuit so that actuator speed meets work requirements.

Specifications

Part Number	61603
Port Size	1/4 NPT
Weight (lbs)	.31

Jergens
WORKHOLDING SOLUTIONS GROUP

Air Circuit Controls

2-Way and 3-Way Valves

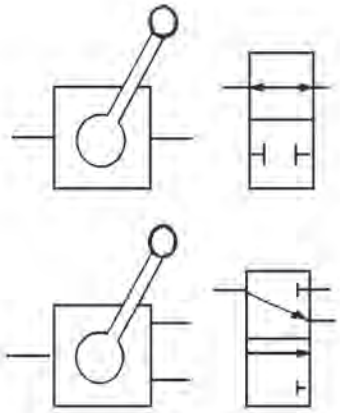

Specifications

Part Number	61601	61634
Type	2-way	3-way
Port Size	3/8 NPT	1/8 NPT
Weight (lbs)	.81	.22

2-way valves are in-line ball valves. They are used as a shut-off valve in simple circuits.

3-way valves are similar to 2-way valves but have a third port which is generally used as a vent or exhaust.

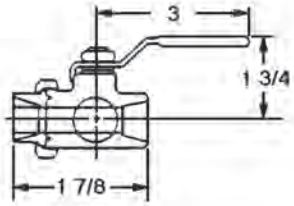

Part Number
61601

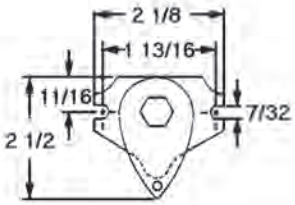

Part Number
61634

4-Way Valves

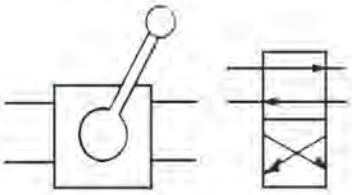

A variety of directional control valves are offered. Manual valves are normally two position, detented. Solenoid valves are 115V-60 Hz; other voltages are available.

Specifications

Part Number	61615	61620	61621	61630	61631*
Actuator Type	Hand	Solenoid	Solenoid	Treadle	Pedal
Return Actuator	Hand	Spring	Solenoid	Treadle	Spring
Port Size	3/8 NPT	3/8 NPT	3/8 NPT	3/8 NPT	3/8 NPT
CV Rating	1.5	1.0	1.0	2.3	2.3
Weight (lbs)	2.75	5.0	5.5	4.0	3.5

*Foot Guard for 61631 Valve; Part Number 61632

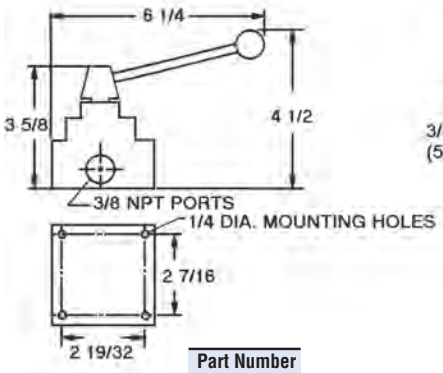

Part Number
61615

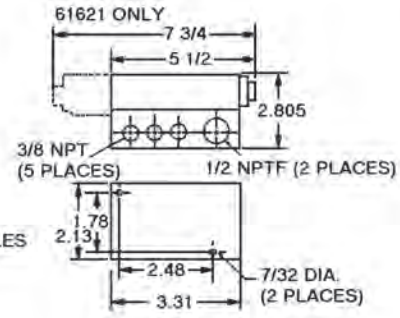

Part Number
61620 & 61621

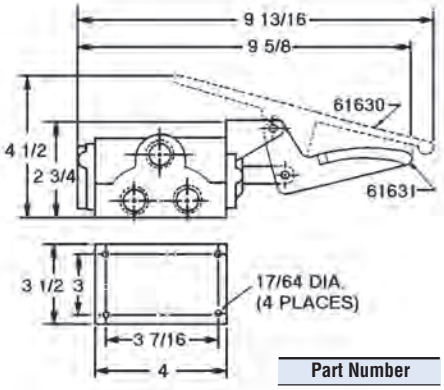

Part Number
61630 & 61631

Air Circuit Controls
2-Hand No Tie Down

Requires the operator to use both hands when activating a work circuit. Two counterbored finger buttons are installed at a minimum center distance.

Specifications

Part Number	61304
Medium	Clean, dry compressed air only
Working Range	50 to 100 psi
TemperatureRange	-30° to 180°F
Air Flow (with Modular Valves)	10 CFM at 100 psi
Exhaust	To atmosphere through holes in plate
Mounting	7/32 holes provided in subplate
Materials	Clear Acrylic, brass
Filtration	40 Micron required
Lubrication	Recommended

Hydraulic Circuit Controls
Gauges

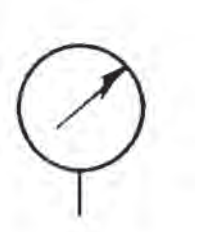

Recommended as a visual pressurized monitoring gauge to be used on all pressuring systems.

When sizing a pressure gauge, the maximum output of the system should equal approximately 2/3 of the gauge capacity.

Gauges are filled with glycerine in order to dampen internal movement.

Gauge blocks facilitate the installation of pressure gauges on standard boosters.

Selection Data

	Part Number		
	3000 Psi	6000 Psi	10000 Psi
Gauge Only	60704	60703	60706
Block Only	61055	61055	61055
Gauge Kit*	60711	60712	60713

* Gauge, Block and Fittings included in kits. All Gauges 1/4" NPT, bottom ported.

Hydraulic Circuit Controls

2-Way Valves

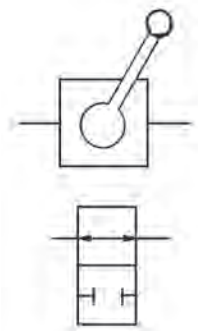

2-way valves are in-line ball valves. They are used as a shut-off valve in simple circuits.

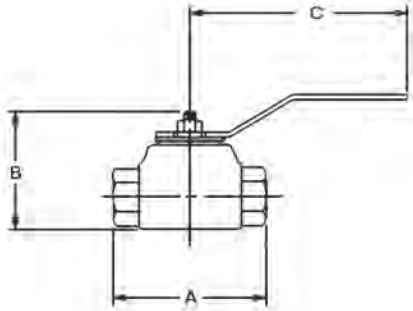

Specifications

Part Number	61610	61639
Port Size	1/4 NPT	3/8 NPT
Pressure Rating (psi)	3000	5000

Dimensions

Part Number	A	B	C
61610	2 11/16	2 5/8	5 1/4
61639	3	2	4 1/4

4-Way Valves

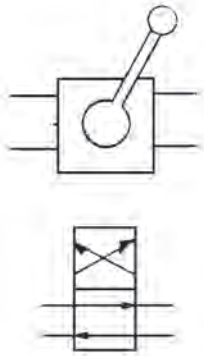

A variety of directional control valves are offered. Manual valves are normally two position, detented. Solenoid valves are 115V-60 Hz; other voltages are available.

Specifications

Part Number	61643	61644	61636	61637	61638
Actuator Type	Hand	Solenoid (115 VAC)	Solenoid (115 VAC)	Solenoid (115 VAC)	Air
Return Actuator	Hand	Solenoid (115 VAC)	Spring	Solenoid (115 VAC)	Spring
Port Size	3/4-16	DO3 MT6	3/4-16	3/4-16	3/8 NPT
Flow Rating	5 GPM	3 GPM	5 GPM	5 GPM	12 GPM
Pressure Rating (psi)	5000	6000	5000	5000	5000
Weight (lbs)	3.75	3	6.75	7.3	17.5

For 4-Way, Zero Leakage Valves, see page 186.

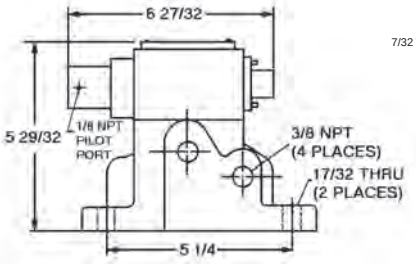

Part Number
61638

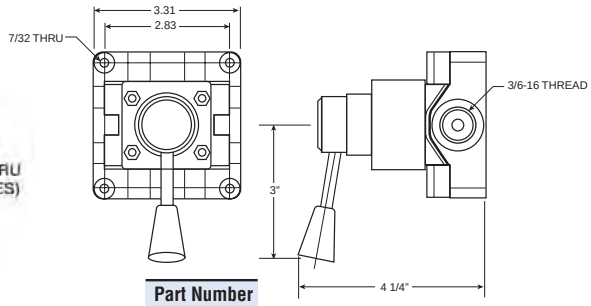

Part Number
61643

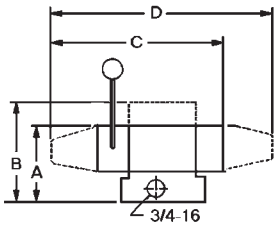

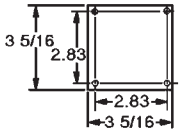

Dimensions

Part Number	A	B	C	D
61636	3 1/4	5 5/64	5 21/32	—
61637	3 1/4	5 5/64	—	8 3/8
61644	2 3/8	—	—	8 3/16

Hydraulic Circuit Controls

Pressure Reducing Valve

Allow individual cylinders or clamps to operate at different pressures from the same power source.

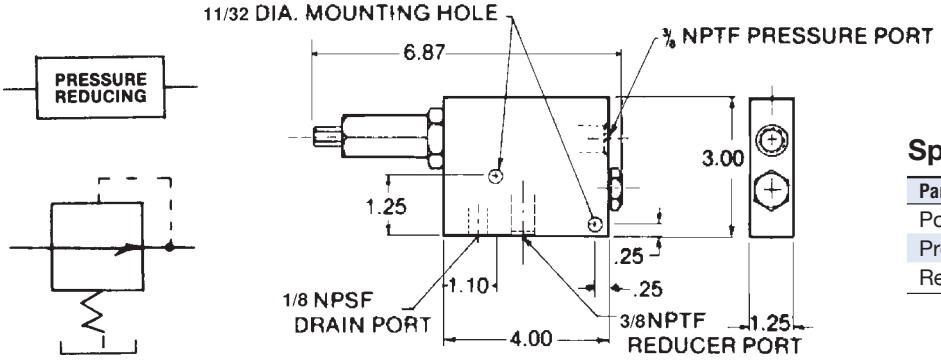

Specifications

Part Number	61619
Port Size	3/8 NPT
Pressure Rating (psi)	5000
Regulating Range (psi)	500-4500

Pressure Switch

Senses pressure in a circuit and may be used to start or shut down a system. A pressure switch can be used to remove the cutting tool and turn off machine in the event of loss of clamping pressure.

Specifications

Part Number	61633
Port Size	1/4 NPT
Pressure Rating (psi)	10000
Regulating Range (psi)	350-5000

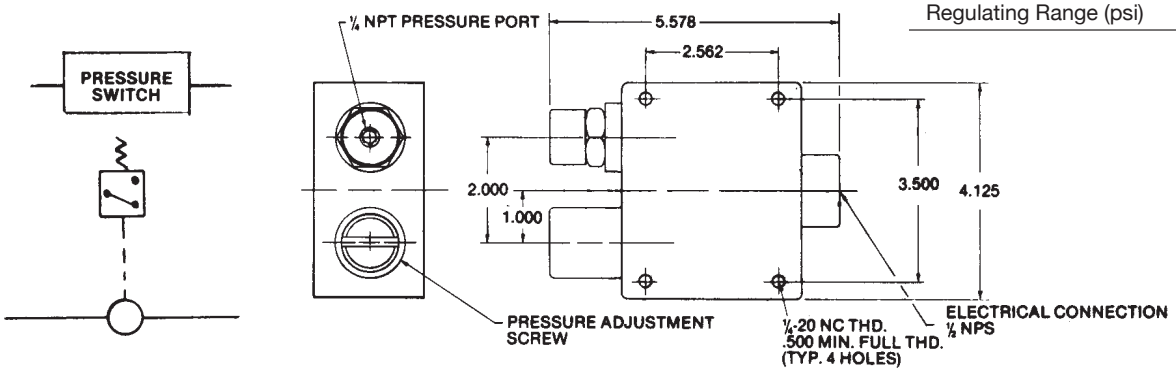

Sequence Valve

With adjustable opening pressure, this valve may be used to control the sequence of work devices in a common circuit.

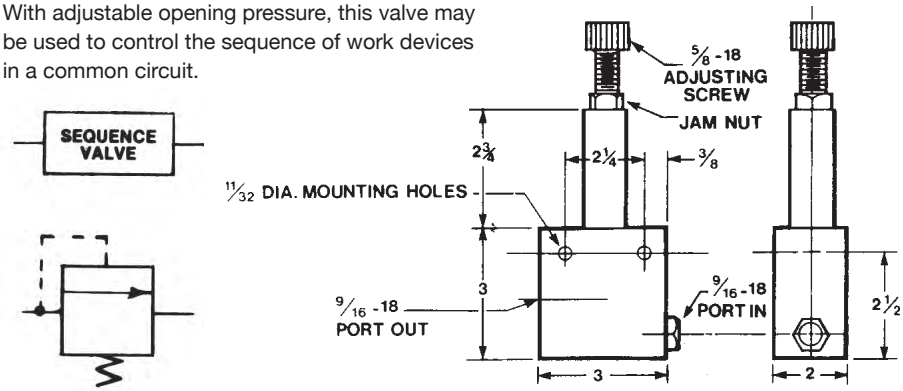

Specifications

Part Number	61640
Port Size	9/16-18
Pressure Rating (psi)	5000
Sequence Range* (psi)	500-3000

* Factory Adjusted to sequence at 1000 psi.

Hydraulic Circuit Controls

Pilot Operated Check Valve

Specifications

Part Number	61629
Hydraulic	
Ports	3/4-16
Pilot Port	7/16-20
Pressure	
Rating (psi)	5000

- Minimum operating pressure 500 psi
- 50:1 differential pressure
- Pilot not to exceed 125 psi

A two-way valve used to lock pressure in a working circuit. Automatic free return flow is provided via air pilot operation. Designed so that loss of shop air line pressure will have no effect on the hydraulic circuit in booster applications.

Specifications

	Part Number
Valve only	**61629**
Valve with Installation Kit	**62211***

* Includes hose, fittings and valves

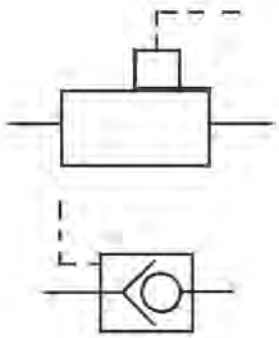

Check Valve

Specifications

Part Number	61607
Port Size	3/8 NPT
Pressure	
Rating (psi)	5000
Flow Rating	CV .83
Weight (lbs)	.63

Allows pressure flow in one direction only.

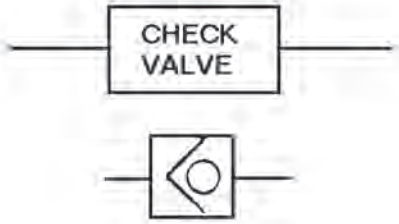

Flow Control Valve

Specifications

Part Number	61609
Port Size	3/8 NPT
Pressure	
Rating (psi)	5000
Flow Rating	CV .78
Weight (lbs)	.63

- Recommended for use with Jergens Swing Clamps

Used to control the flow of pressure in a system, to slow the movement of individual cylinders, or decrease shock.

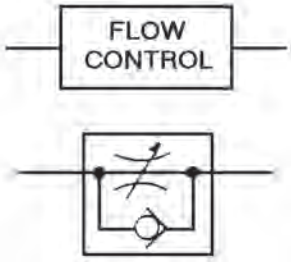

Oil Reservoirs

Can be used with air pressure on top of oil to do work in your system, such as returning double acting cylinders with hydraulic pressure. The acrylic reservoir allows easy monitoring of oil level. Special baffle plates in the top of the reservoir distribute incoming air pressure evenly against the top surface of the oil.

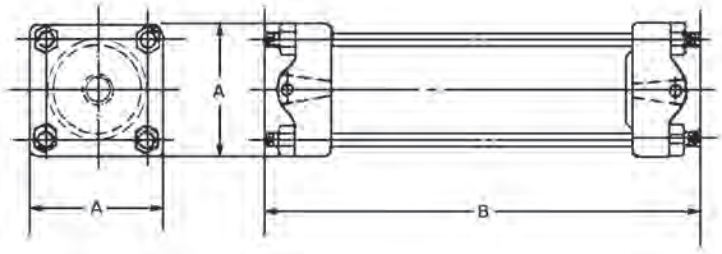

Part Number	A	B	Capacity (Cu. In.)	Side Ports	End Ports	Wt (lbs)
61750	2 7/8	9 1/2	18	9/16-18	9/16-18	3.0
61751	4 13/16	8 1/2	55	NONE	9/16-18	6.8

• Maximum air operating pressure rating 125 PSI.

Inch to metric fittings available – see page 199.

Hydraulic Fluids

Hydraulic Oil
Jergens Hydraulic Oil is specially formulated to minimize foaming and to protect metal parts from rust. It is an aircraft type oil with high wetting out and film strength characteristics.

Its viscosity is 170/190 at 100˚F and it maintains functional characteristics down to 25˚F below zero.

One Quart.....**60801**
One Gallon.....**60802**
Five Gallon..... **60803**
55 Gallon Drum **60804**

Food Grade Hydraulic Oil
Jergens Food Grade Hydraulic Oil is a blend of food grade lubricants designed for use as a hydraulic media in food packaging and other similar equipment. It is composed of 100% chemically produced synthetic lubricants and contains no petroleum hydrocarbons.

Its viscosity is 140 SUS at 100˚F and 725 SUS at 35˚F.

One Quart..... **60813**
One Gallon..... **60812**
55 Gallon Drum **60811**

Manifold
Strip

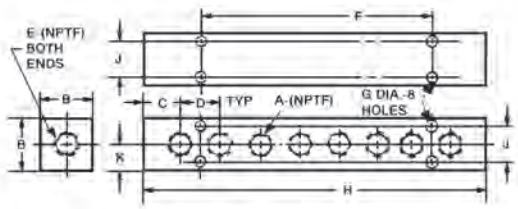

Dimensions

Part Number	Number Of Side Ports	Ports A	B	C	D	End Ports E	F	G	H	J	K	Wt. (lbs)
61801	4	1/4	1 1/2	5/8	7/8	3/8	1 3/4	13/64	3 7/8	1 1/64	3/4	.75
61802	8	1/4	1 1/2	5/8	7/8	3/8	5 1/4	13/64	7 3/8	1 1/64	3/4	1.50

NOTE: Maximum operating pressure is 3000 PSI for all aluminum manifolds.

Hex

- Material: Aluminum
- Finish: Black Oxide

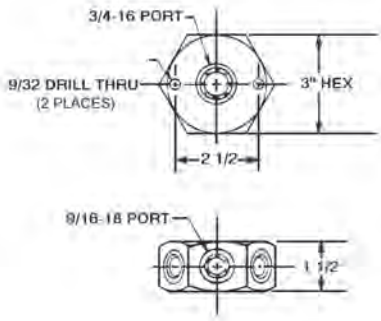

The six port hex manifold, with SAE straight thread ports, can be mounted in the center of several work units or used with a **61031** union (see page 199) to mount the manifold directly to the output port of your Jergens Booster.

Part Number
61805

Rotary Coupler
Single and Dual Passage

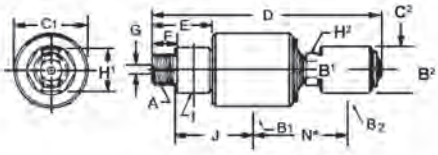

*N on 61998 is 3 3/16

Specifications

Maximum Air Pressure (psi)	150
Maximum Vacuum (Hg.)	28"
Maximum Hydraulic Pressure (psi)	3000
Maximum Temperature	250°F
Maximum Speed (rpm)	250

Dimensions

Part Number	Rotor Thread A	Tap B1	Tap B2	C1	C2	D	E	F	Rotor Port G	Hex H1	Hex H2	Tap I	Lockup J	Wt. (lbs)
61997	3/8 NPT	1/4 NPT	—	1 1/2	—	3 1/4	1 1/8	5/8	5/16	7/8	—	—	1 25/32	.5
61998	3/4 NPT	1/2 NPT	1/4 NPT	2 3/4	1 1/2	7 11/16	1 15/16	7/8	1/4	1 3/8	7/8	1/4 NPT	2 7/8	3.0

Installation Tips for Plumbing Hydraulic Systems

Hose

The use of hydraulic hose is only recommended when the need for flexibility exists. Generally, the only hydraulic hose in an application is that used to connect the power source to the fixture.

All hydraulic hoses expand under pressure. This uses costly energy as well as volume. Some hoses expand at a greater rate than others, even though size remains the same.

Generally speaking, an 8 foot length of hydraulic hose will expand at a rate absorbing one cubic inch of high pressure oil at 3000 p.s.i.

When applying hose, the following is recommended:

Do Not:
- Overextend bend radius of hose.
- Put unnecessary strain at fitting ends.
- Subject hose to abrasive conditions.
- Use hose that hasn't been identified.

Do:
- Use a minimum size of 3/8" I.D.
- Check with factory for alternate brands.
- Use firesleeve protective covering in applications where flame is present (like weld fixtures).
- Make sure power source has enough high pressure volume to compensate for hose expansion.

Tubing

Whenever possible use 3/8" diameter steel fluid line tubing for hydraulic lines. This is a low carbon, soft tube and readily available. Depending on the application, two types are recommended:

- 3/8" diameter x .049 wall thickness for pressures to 3000 p.s.i.
- 3/8" diameter x .065 wall thickness for pressures to 5000 p.s.i.

When rigid tubing is applied to air circuitry, use copper tube. This will reduce the corrosive effect of water most likely found in your air lines. Caution: Do not use copper in a high pressure hydraulic circuit!

Fittings

Pipe Thread Fittings

Upon installation, apply a good sealing compound on threads of fitting only. When Teflon tape is used, overlap threads 1-1/2 to two turns tightly in direction of thread. Be careful not to extend tape over end of fitting. Do not overtighten pipe threads as they may put unnecessary strain on pressure vessels.

Straight Thread Fittings (SAE J514)

These fittings require no sealing material as the built-in o-ring provides a positive seal. The threads are a Class 2 straight thread with no taper. Before installation, be sure to lubricate the o-ring. Tighten these fittings to approximately 50-150 ft./lbs.

The Tube Flare

Cut tube squarely and remove any burrs. Split flares may be caused by the tube being too hard, opening up of scratches and draw marks, or failure to deburr tube end.

Place nut, then sleeve onto tube with open end of nut and toe end of sleeve toward end of tube.

Flare to standard 37° angle (maximum diameter of flare is equal to maximum diameter of sleeve). A correct flare should extend beyond the inside diameter of toe on sleeve but not beyond outside diameter of toe on sleeve.

Never attempt to spring tube to force alignment using the fitting installed. This can damage the flare and wrinkle, kink or flatten the tube. This can be avoided by using the correct tools.

Jergens
WORKHOLDING SOLUTIONS GROUP

Fittings

37° Flare Fittings

Sleeve

Part Number	Item	Tube
61001	Sleeve	1/4
61015	Sleeve	3/8
61049	Sleeve	1/2

Nuts

Part Number	Item	Tube
61002	Nuts	1/4
61016	Nuts	3/8
61050	Nuts	1/2

Caps

Part Number	Item	Tube
61056	Caps	1/4
61057	Caps	3/8

Plugs

Part Number	Item	Tube
61058	Plugs	1/4
61059	Plugs	3/8

Reducer

Part Number	Item	Tube
61063	Reducer	1/4 Tube 3/8 Female

Tee Nut Fittings

Part Number	Thread	Tube
61051	Swivel Nut Branch Tees	1/4
61062	Swivel Nut Branch Tees	3/8
61023	Union Tee	3/8

Male Connectors

Part Number	Thread Type	Thread/ Tube
61007	Pipe	1/8 NPT x 1/4 Tube
61054	Pipe	1/8 NPT x 3/8 Tube
61008	Pipe	1/4 NPT x 1/4 Tube
61020	Pipe	1/4 NPT x 3/8 Tube
61028	Pipe	3/8 NPT x 1/4 Tube
61034	Pipe	3/8 NPT x 3/8 Tube
61048	Pipe	3/8 NPT x 1/2 Tube
61009	Straight	7/16-18 x 1/4 Tube
61030	Straight	9/16-18 x 1/4 Tube
61021	Straight	9/16-18 x 3/8 Tube
61046	Straight	3/4-16 x 3/8 Tube
61047	Straight	3/4-16 x 1/2 Tube

Male Elbows

Part Number	Type	Thread/ Tube
61003	Pipe Thread	1/8 NPT x 1/4 Tube
61004	Pipe Thread	1/4 NPT x 1/4 Tube
61017	Pipe Thread	1/4 NPT x 3/8 Tube
61064	Pipe Thread	3/8 NPT x 3/8 Tube
61045	Pipe Thread	3/8 NPT x 1/2 Tube
61072	45 Elbow	3/8 NPT x 3/8 Tube
61005	Straight Thread	7/16-20 x 1/4 Tube
61029	Straight Thread	9/16-18 x 1/4 Tube
61018	Straight Thread	9/16-18 x 3/8 Tube
61044	Straight Thread	3/4-16 x 1/2 Tube

Male Branch Tees

Part Number	Type	Thread/ Tube
61014	Pipe Thread	1/8 NPT x 1/4 Tube
61027	Pipe Thread	1/4 NPT x 3/8 Tube
61043	Pipe Thread	3/8 NPT x 1/2 Tube
61040	Straight Thread	7/16-20 x 1/4 Tube
61041	Straight Thread	9/16-18 x 3/8 Tube
61042	Straight Thread	3/4-16 x 1/2 Tube
61032	Male Run Tees	7/16-20 x 1/4 Tube
61061	Male Run Tees	9/16-18 x 3/8 Tube

Flareless Fittings

These fittings are the most common types needed to plumb Pressure Points and Screw Pumps. Use 1/8" Heavy Duty High Pressure, Fluid Line Steel Tube.

Ferrule 1/8 Tube	Nut 1/8 Tube	Male Connector 1/8 NPT x 1/8 Tube	Male Elbow 1/8 Tube	Union Tee 1/8 Tube
60201	60202	60204	60205	60207

Fittings

Adapters

Part Number	Thread Type	Male	Female
61075	Pipe	1/16 NPT	1/4 NPT
61076	Pipe	1/8 NPT	1/4 NPT
60221	Mixed	1/4 NPT	1/4 BSP
61082	Mixed	7/16-20	1/4 NPT
61081	Mixed	9/16-18	1/4 NPT
60211	Mixed	9/16-18	3/8 Tube
60217	Mixed	3/8 Tube	1/4 NPT
60222	Mixed	3/8 NPT	3/8 BSP
61035	Mixed	3/4-16	1/4 NPT
61036	Mixed	3/4-16	3/8 NPT
61077	Metric	7/16-20	1/8 ISO
61078	Metric	9/16-18	1/4 ISO
61079	Metric	3/4-16	3/8 ISO
61150	Mixed	7/16-20	1/8 BSPP
61151	Mixed	7/16-20	1/4 BSPP
61153	Mixed	9/16-18	3/8 BSPP
61152	Mixed	9/16-18	1/4 BSPP
61154	Mixed	3/4-16	1/4 BSPP
61155	Mixed	3/4-16	3/8 BSPP

Elbows

Part Number	Thread	
61095	1/8 NPT Female	—
61070	1/8 NPT Straight	—
61096	1/4 NPT Female	—
61071	1/4 NPT Straight	—
61097	3/8 NPT Female	—
61066	3/8 NPT Male	—
61098	1/2 NPT Female	—
61065	3/4-16 Male	3/8 NPT Female

Tees

Part Number	Thread
61087	1/8 NPT Female
61088	1/4 NPT Female
61089	3/8 NPT Female
61090	1/2 NPT Female

Reducers/Expanders

Part Number	Thread Type	Male	Female
61074	Pipe	1/4 NPT	1/8 NPT
61025	Pipe	3/8 NPT	1/4 NPT
61038	Pipe	1/2 NPT	3/8 NPT
61067	Pipe	3/4 NPT	3/8 NPT
61039	Pipe	3/4 NPT	1/2 NPT
61033	Straight	9/16-18	7/16-20
61080	Straight	7/16-20	9/16-18
61037	Straight	3/4-16	9/16-18

Nipples

Part Number	Thread
61083	1/8 NPT
61084	1/4 NPT
61085	3/8 NPT
61086	1/2 NPT
61052	1/8 NPT x 3/8 NPT
61053	1/4 NPT x 3/8 NPT
60210	9/16-18 Union
61031	3/4-16 Union

Plugs

Part Number	Thread
61091	1/8 NPT
61092	1/4 NPT
61093	3/8 NPT
61094	1/2 NPT
61060	7/16-20
61068	9/16-18
61069	3/4-16

Quick Disconnect Couplers

Hydraulic Coupler

Sleeve	Nipple
3/8 NPT Female **61915**	3/8 NPT Female **61965**
1/4 NPT Female **61916**	1/4 NPT Male **61966**

Hydraulic couplers have dual checks.

Air Couplers

Sleeve	Nipple
1/8 NPT Female **61904**	1/8 NPT Male **61950**
1/4 NPT Female **61905**	1/4 NPT Male **61951**
	1/4 NPT Female **61954**

Air couplers have checks on sleeves only.

Flexible Hose

Low pressure air hose is sold by the foot in bulk lengths. Order the total footage and number of push-on fittings required by using the number to the right.

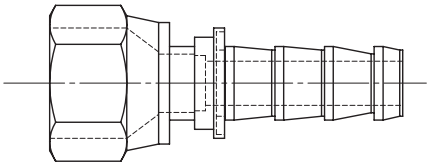

Low Pressure Air Hose

Hose I.D.	1/4	3/8	1/2
Hose Part Number	**61106**	**61108**	**61110**
Fitting Part Number	**61107**	**61109**	**61111**
Thread Size	7/16-20	9/16-18	3/4-16

Hydraulic Hose

High pressure hose is supplied assembled and to lengths indicated. Lengths are measured from end of coupling to end of coupling. Hose is 3/8" ID and available in 4000 psi or 7000 psi rating. 3/8" female tubing fittings on each end.

High Pressure Hydraulic Hose

Length	12"	18"	24"	36"	72"
Part Number 4000 psi	**61201**	**61202**	**61203**	**61204**	**61205**
Part Number 7000 psi	**61211**	**61212**	**61213**	**61214**	**61215**

*Also available in 5000 psi.

Hydraulic Hose (Build Your Own)

Length	25'	Hose Ends	Hose Ends
Part Number 2750 psi	**61221** 1/4 Hose	**61226** 1/4 Npt Male	**61227** 1/4 37° JIC Swivel Female

Simple Tools: Adjustable wrench and saw with steel blade.

Steel Tubing

Whenever possible, 3/8" diameter steel tubing should be used for hydraulic lines. Jergens tubing is low carbon soft tube with .065 wall thickness. The tubing is rated at 5000 psi.

Steel Tubing

Part Number	Description
60209	3/8 DIA. x 5 Ft.

Hydraulic Product Repair Kits with Replacement Seals

Hydraulic Part Number	Repair Kit Number	Hydraulic Part Number	Repair Kit Number	Hydraulic Part Number	Repair Kit Number	Hydraulic Part Number	Repair Kit Number	Hydraulic Part Number	Repair Kit Number
60302	62102	60414	62195	—	62162 (3)	61709	62109	62824	62184
60303	62103	60461	62125	60651	62105 (2)	61710	62109	62831	62187
60307	62102	60462	62126	—	62162 (3)	61711	62110	62841	62185
60340	62104	60463	62127	60660	62360	61714	62107	62842	62185
60341	62105	60464	62128	60661	62360	61715	62108	62845	62303
60345	62189	60465	62129	60662	62362	61720	62173	62846	62303
60350	62120	60466	62130	60663	62362	61721	62174	62852	62199
60351	62121	60511	62139	60664	62364	61722	62175	63101	62101
60360	62120	60512	62140	60665	62364	61736	62159	63103	62103
60361	62121	60513	62194	60670	62360	61737	62160	63107	62102
60371	62167	60554	62151	60671	62360	61755	62197	63113	62105
60372	62167	60555	62151	60672	62362	61756	62198	63117	62104
60373	62168	60593	62145 (1)	60673	62362	61761	62144	63123	62106
60374	62169	60594	62146 (1)	60674	62364	61762	62144	63201	62134
60381	62170	60595	62147 (1)	60675	62364	61997	62165	63202	62134
60382	62170	60596	62177	60680	62190	61998	62166	63212	62126
60383	62171	60597	62178	60681	62196	62721	62161	63213	62127
60384	62171	60598	62179	60685	62131	62722	62161	63214	62128
60401	62106	60601	62102 (2)	61501	62133	62801*	62172	63215	62129
60402	62106	—	62162 (3)	61612	62134	62802*	62172	63216	62130
60403	62195	60602	62103 (2)	61514	62134	62803*	62172	63302	62140
60404	62195	—	62162 (3)	61623	62163	62804*	62172	63303	62194
60405	62124	60621	62154	61629	62123	62805	62301	63801	62184
60410	62106	60622	62155	61640	62164	62806	62302	63802	62184
60411	62106	60631	62156	61701	62132	62811	62183	—	—
60412	62106	60650	62104 (4)	61704	62107	62812	62183	—	—
60413	62195	—	62189 (5)	61705	62108	62823	62184	—	—

(1) Special tools required: use 62148 tool for 60556, use 62149 tool for 60597 or 60598.
(2) Cylinder Kit (3) Mechanical Kit (4) Kit for cylinder with 3/8" piston (5) Kit for cylinder with 1/2" piston
(*) Tool kit 62176 required for 62801, 62802, 62803, 62804

Recommendation – when replacing seals in hydraulic cylinders, we recommend replacing all seals at the same time.

Technical Assistance

Jergens maintains a qualified staff whose primary responsibility is to provide technical assistance to our distributors and customers.

Your direct connection number for dimensional questions, circuit assistance and troubleshooting is:

1-877-426-2504

OR

E-mail: workholding@jergensinc.com

THE Jergens® DIFFERENCE

Swing Cylinders

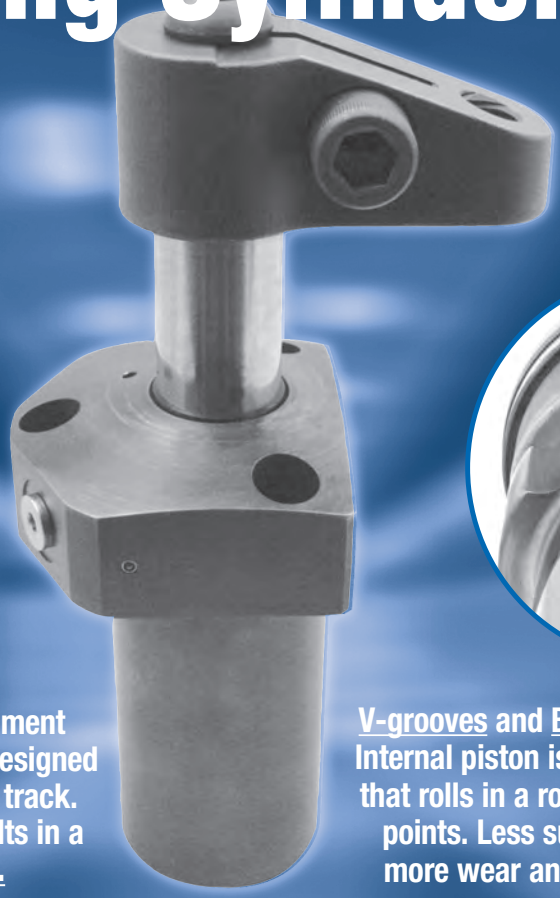

OURS

Squared Tracks and Pin Engagement
Internal piston is driven by a pin designed for close tolerance with squared track. Larger load-bearing surface results in a more durable assembly.

THEIRS

V-grooves and Ball-bearing Engagement
Internal piston is driven by a ball bearing that rolls in a rounded track on only two points. Less surface contact leads to more wear and reduced product life.

JERGENS CLAMPING SWING CYLINDERS	VS.	OTHER CLAMPING SWING CYLINDERS
Precision machined for close tolerance between piston groove and pin. Better fit results in smoother motion and a more durable swing cylinder assembly.		Less surface area between bearing and track combined with severe conditions within the clamp body result in deforming of the bearing and assembly breakdown.
Free-floating pin design matches the shape of the groove. More contact area and less wear "keeps the pin in the pocket."		Ball bearings can "pop out" of the track—a common failure of traditional swing clamps—causing the piston to seize.
Heavy-duty, low-friction rod seal features "double-lip" sealing—virtually leak-free even under severe operating conditions. Plus, lubricant is retained in the cavity formed by secondary lip—increases performance and quiets operation.		Seals may be more prone to wear and "dry run." Failure of traditional seals is the primary failure of swing cylinder clamps.
High-pressure, low-friction, bi-directional piston seal is easier to turn and reduces leaks.		Breakdown of traditional seals is the primary failure of swing cylinder clamps. Galled seals cause contaminants, accelerating breakdown and increasing downtime.

Jergens®

The Standard Components with the Highest Standards™

15700 S. Waterloo Road • Cleveland, OH 44110 • 877-426-2504 • www.jergensinc.com

LOCATING COMPONENTS

Locating Components

Adjustable Jack Screws 218
Adjustable Locating Buttons 218
Alloy Steel Pull Dowel Pins 206–207
Bullet Nose Dowels 225
Bullet Nose Pins 226
Drift Handles 219
Fixture Jacks 218
Fixture Keys, Sine 220–221
Fixture Keys, Standard 219
Flat Feet 216
Jig Feet 215
Jig Legs 216
Lanyards 210
Locating Pins 222–223
Locating Pin Liners 224
Locating Pin Lock Screws 224
Pilot Locating Pins 225
Precision Expanding Dowels 209
Pull Dowel Pins, Alloy Steel 206–207
Pull Dowels 208
Rest Buttons 211–213
Rest Buttons, Carbide Insert 213
Rest Buttons, Threaded 213
Rest Pads 214
Screws, Adjustable Jack 218
Slotted Locator Bushings 210
Stripper Bolts, Kwik-Strip 204–205
Tooling/Inspection Balls 227–229
Work Support Jacks, Manual 217

Jergens®
MANUFACTURING EFFICIENCY

Kwik-Strip® Stripper Bolts

A New Perspective on Stripper Plates

Today's more complex dies require more time to service. The advantage of time saving devices such as ball and roll lock punches is minimized unless the stripper plate can be removed first.

The patented Jergens Kwik-Strip Stripper Bolts provide an inexpensive, simple method of stripper plate removal. The stripper can be removed with the die still mounted in the press!

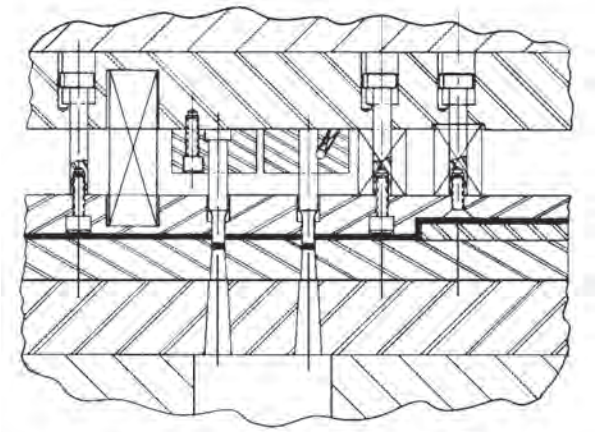

Installation

Step 1: Drill a through hole 1/32" larger than the nominal body diameter of the bolt to be used.

Step 2: Using a Jergens Drill Jig, drill the auxiliary 1/4" hole. The 1/4" hole may be located radially at any position on the periphery of the body hole. Drill the 1/4" hole slightly deeper than the proposed counterbore.

Step 3: Using a standard counterboring tool, counterbore to required depth. See counterbore selection chart for proper size.

Step 4: Drill and counterbore the stripper plate for a socket head cap screw.

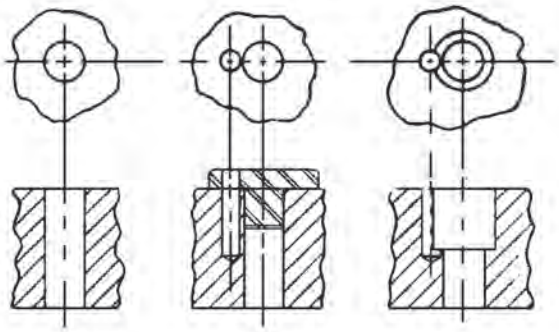

Installation in Existing Dies

To convert an existing die for use with Jergens Kwik-Strip Stripper Bolts, simply mill a 1/4" slot down the side of the stripper counterbore, then drill and counterbore the stripper plate. If the same size thread must be maintained, the through hole and counterbore in the punch holder will have to be increased.

Disassembly in the Press

Block the stripper plate in position, remove the cap screws using a hex wrench, then carefully remove stripper plate. Replace stripper plate after completion of required service.

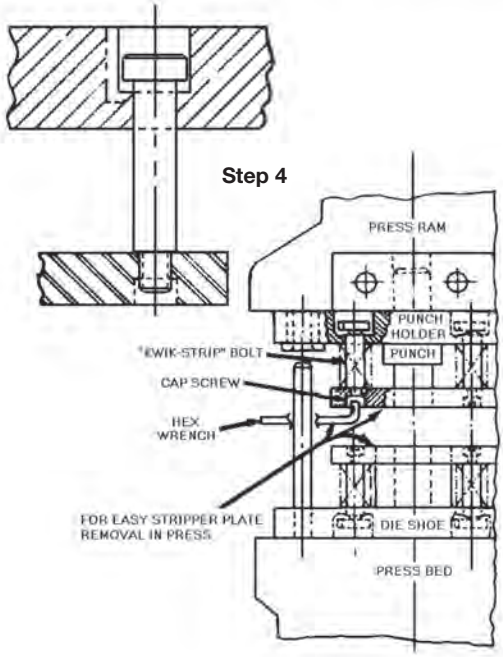

Kwik-Strip® Stripper Bolts

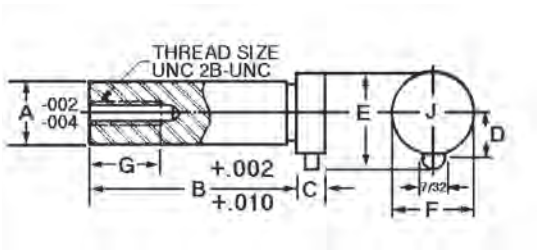

- Material: Alloy Steel
- Heat Treat: Rc 32-36
- Available in Fixture Pro® Design Software

Selection of Sizes

Size selections should be based upon thread size. For example, if your application calls for a 1/2" stripper bolt (with a 3/8" thread) use a 5/8" Kwik-Strip bolt (with a 3/8" thread). Kwik-Strip bolts may be shortened by 1/4" and still have sufficient thread depth for the cap screw.

Part Number	A	B	C	D	E	F	G	Thread Size	Wt. (lbs)
46601	1/2	2	5/16	.409	57/64	3/4	1	5/16-18	.14
46602	1/2	2 1/2	5/16	.409	57/64	3/4	1	5/16-18	.17
46603	1/2	3	5/16	.409	57/64	3/4	1	5/16-18	.20
46604	1/2	3 1/2	5/16	.409	57/64	3/4	1	5/16-18	.23
46605	1/2	4	5/16	.409	57/64	3/4	1	5/16-18	.26
46606	1/2	4 1/2	5/16	.409	57/64	3/4	1	5/16-18	.29
46607	1/2	5	5/16	.409	57/64	3/4	1	5/16-18	.32
46608	5/8	2	3/8	.472	1 1/64	7/8	1 1/8	3/8-16	.18
46609	5/8	2 1/2	3/8	.472	1 1/64	7/8	1 1/8	3/8-16	.23
46610	5/8	3	3/8	.472	1 1/64	7/8	1 1/8	3/8-16	.27
46611	5/8	3 1/2	3/8	.472	1 1/64	7/8	1 1/8	3/8-16	.32
46612	5/8	4	3/8	.472	1 1/64	7/8	1 1/8	3/8-16	.36
46613	5/8	4 1/2	3/8	.472	1 1/64	7/8	1 1/8	3/8-16	.41
46614	5/8	5	3/8	.472	1 1/64	7/8	1 1/8	3/8-16	.45
46615	3/4	2	1/2	.534	1 9/64	1	1 1/4	1/2-13	.26
46616	3/4	2 1/2	1/2	.534	1 9/64	1	1 1/4	1/2-13	.33
46617	3/4	3	1/2	.534	1 9/64	1	1 1/4	1/2-13	.39
46618	3/4	3 1/2	1/2	.534	1 9/64	1	1 1/4	1/2-13	.46
46619	3/4	4	1/2	.534	1 9/64	1	1 1/4	1/2-13	.52
46620	3/4	4 1/2	1/2	.534	1 9/64	1	1 1/4	1/2-13	.59
46621	3/4	5	1/2	.534	1 9/64	1	1 1/4	1/2-13	.65

Alloy Steel Pull Dowel Pins

Jergens Offers 3 Styles of Precision Ground Pull Dowels

Spiral Groove
(Grooves Help to Relieve Trapped Air)

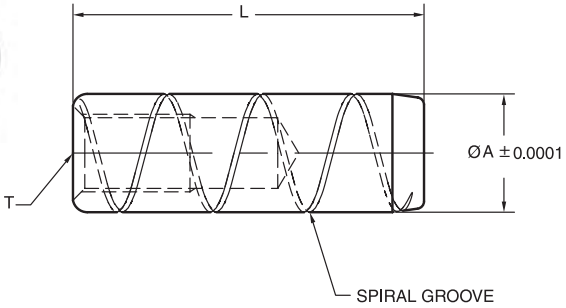

Flat Vent
(Ground Flat Helps to Relieve Trapped Air)

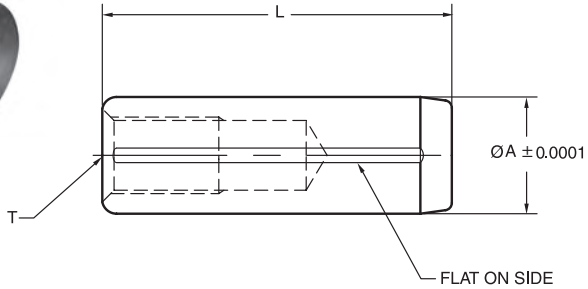

Standard Round
(Non-Vented)

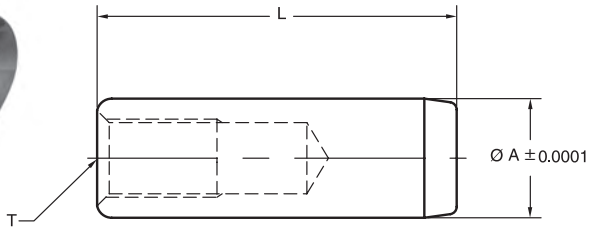

Features, Applications & Benefits

- Internally threaded hole allows removal of pull dowels with a standard screw.
- Standard Round Pull Dowels are typically used in applications featuring a through hole.
- Spiral Groove Pull Dowels feature a groove cut to allow trapped air to be released.
- Flat Vent Pull Dowels feature a ground flat on one side to release trapped air.
- Spiral Groove and Flat Vent Pull Dowels are typically used in blind hole applications.
- All of Jergens Precision Ground Pull Dowels are constructed of heat treated alloy steel.

Precision Ground Pull Dowels

Spiral Groove	Flat Vent	Standard Round	Nominal	Actual	Length	Internal Thread
31800	31400	31600	1/4	.2502	1/2	8 - 32
31801	31401	31601	1/4	.2502	3/4	8 - 32
31802	31402	31602	1/4	.2502	1	8 - 32
31803	31403	31603	1/4	.2502	1-1/4	8 - 32
31804	31404	31604	1/4	.2502	1-1/2	8 - 32
31805	31405	31605	1/4	.2502	1-3/4	8 - 32
31806	31406	31606	1/4	.2502	2	8 - 32
31807	31407	31654	1/4	.2502	2-1/4	8 - 32
31808	31408	31607	1/4	.2502	2-1/2	8 - 32
31809	31409	31608	5/16	.3127	3/4	10 - 32
31810	31410	31609	5/16	.3127	1	10 - 32
31811	31411	31610	5/16	.3127	1-1/4	10 - 32
31812	31412	31611	5/16	.3127	1-1/2	10 - 32
31813	31413	31612	5/16	.3127	2	10 - 32
31814	31414	31613	5/16	.3127	2-1/4	10 - 32
31815	31415	31614	5/16	.3127	2-1/2	10 - 32
31816	31416	31615	3/8	.3752	3/4	10 - 32
31817	31417	31616	3/8	.3752	1	10 - 32
31818	31418	31617	3/8	.3752	1-1/4	10 - 32
31819	31419	31618	3/8	.3752	1-1/2	10 - 32
31820	31420	31619	3/8	.3752	1-3/4	10 - 32
31821	31421	31620	3/8	.3752	2	10 - 32
31822	31422	31621	3/8	.3752	2-1/4	10 - 32
31823	31423	31622	3/8	.3752	2-1/2	10 - 32
31824	31424	31623	3/8	.3752	3	10 - 32
31825	31425	31624	7/16	.4377	1	1/4 - 20
31826	31426	31625	7/16	.4377	1-1/2	1/4 - 20
31827	31427	31626	7/16	.4377	2	1/4 - 20
31828	31428	31627	1/2	.5002	3/4	1/4 - 20
31829	31429	31628	1/2	.5002	1	1/4 - 20
31830	31430	31629	1/2	.5002	1-1/4	1/4 - 20
31831	31431	31630	1/2	.5002	1-1/2	1/4 - 20
31832	31432	31631	1/2	.5002	1-3/4	1/4 - 20
31833	31433	31632	1/2	.5002	2	1/4 - 20
31834	31434	31633	1/2	.5002	2-1/4	1/4 - 20
31835	31435	31634	1/2	.5002	2-1/2	1/4 - 20
31836	31436	31635	1/2	.5002	3	1/4 - 20
31837	31437	31636	1/2	.5002	3-1/2	1/4 - 20
31838	31438	31637	1/2	.5002	4	1/4 - 20
31839	31439	31638	5/8	.6252	1-1/4	1/4 - 20
31840	31440	31639	5/8	.6252	1-1/2	1/4 - 20
31841	31441	31640	5/8	.6252	2	1/4 - 20
31842	31442	31641	5/8	.6252	2-1/4	1/4 - 20
31843	31443	31642	5/8	.6252	2-1/2	1/4 - 20
31844	31444	31643	5/8	.6252	3	1/4 - 20
31845	31445	31644	5/8	.6252	4	1/4 - 20
31846	31446	31645	3/4	.7502	1-1/2	5/16 - 18
31847	31456	31655	3/4	.7502	1-3/4	5/16 - 18
31848	31447	31646	3/4	.7502	2	5/16 - 18
31849	31448	31647	3/4	.7502	2-1/2	5/16 - 18
31850	31449	31648	3/4	.7502	3	5/16 - 18
31851	31450	31649	3/4	.7502	4	5/16 - 18
31856*	31451	31656	1	1.0002	1-3/4	5/16 - 18
31852*	31452	31650	1	1.0002	2	5/16 - 18
31853*	31453	31651	1	1.0002	2-1/2	5/16 - 18
31854*	31454	31652	1	1.0002	3	5/16 - 18
31855*	31455	31653	1	1.0002	4	5/16 - 18

*3/8-16 Internal Thread

Technical Data

Material:
Alloy Steel

Length Tolerance:
± .010"

Core Hardness:
47 - 58 Rockwell C

Diameter Tolerance:
± .0001"

Surface Hardness:
60 - 64 Rockwell C

Recommended Hole Size:
.0005" under Nom. Dia.

Surface Finish:
8 Micro-Inch

Specification:
ASME B18.8.2

Spiral Groove

Flat Vent

Standard Round

Pull Dowels
Metric

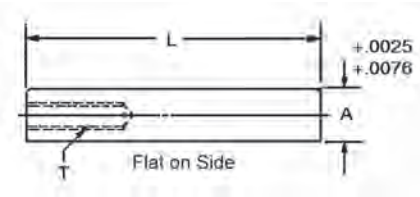

- Material: Low Carbon Steel
- Heat Treat: Case Hardened
- Available in Fixture Pro® Design Software

Flat ground on the side for air release in blind holes.

Part Number	A	L	T
31751	8	20	M5 x 1.0
31753	8	30	M5 x 1.0
31755	8	40	M5 x 1.0
31759	10	20	M6 x 1.0
31761	10	30	M6 x 1.0
31763	10	40	M6 x 1.0
31765	10	50	M6 x 1.0
31767	10	70	M6 x 1.0
31769	12	20	M6 x 1.0
31771	12	30	M6 x 1.0
31773	12	40	M6 x 1.0

Part Number	A	L	T
31775	12	50	M6 x 1.0
31776	12	60	M6 x 1.0
31777	12	70	M6 x 1.0
31780	16	40	M8 x 1.25
31782	16	50	M8 x 1.25
31783	16	60	M8 x 1.25
31784	16	70	M8 x 1.25
31787	20	50	M10 x 1.6
31788	20	60	M10 x 1.6
31789	20	70	M10 x 1.6

Button head screw not included.

Precision Expanding Dowels

- Material: Alloy Steel, case hardened to 50-55 Rockwell C
- Self-Centering and Repeatable within +/- 0.0005" (0.013mm)
- Top and bottom half of dowel expand seperately
- Patented

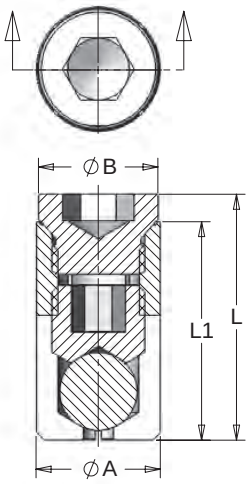

Inch

Part Number	Nominal Diameter Inch	Nominal Length (L) Inch	Recommended Hole Diameter	A Diameter	B Diameter	L1	Hex Key Sizes Bottom	Hex Key Sizes Top
			+0.001/-0.000"	+0.000/-0.001"	+0.000/-0.010"	±0.005"	Step 1	Step 2
29401	1/4	1/2	0.250	0.249	0.245	0.428	5/64	3/32
29402	3/8	3/4	0.375	0.374	0.370	0.634	1/8	5/32
29403	1/2	1	0.500	0.499	0.495	0.881	5/32	3/16
29404	5/8	1 1/4	0.625	0.624	0.620	1.162	3/16	7/32
29405	3/4	1 1/2	0.750	0.749	0.745	1.390	1/4	5/16
29406	1	2	1.000	0.999	0.995	1.758	3/8	1/2

Metric

Part Number	Nominal Diameter (mm)	Nominal Length (L) (mm)	Recommended Hole Diameter	A Diameter	B Diameter	L1	Hex Key Sizes Bottom	Hex Key Sizes Top
			+0.025/-0.00mm	+0.00/-0.025mm	+0.00/-0.25mm	±0.13mm	Step 1	Step 2
29451	10	20	10	9.98	9.88	17.45	3	4
29452	12	25	12	11.98	11.89	22.48	4	5
29453	14	28	14	13.97	13.89	24.74	4	5
29454	16	32	16	15.98	15.90	29.51	5	6
29455	20	38	20	19.98	19.89	35.31	6	8

Installation Instructions

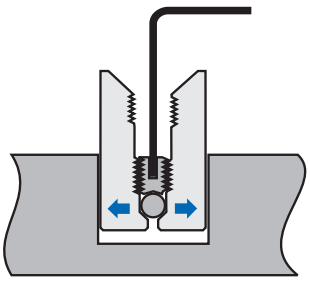

Step 1

Remove the top screw, insert the dowel into the locating hole of the first part, and expand the bottom half with a hex wrench.

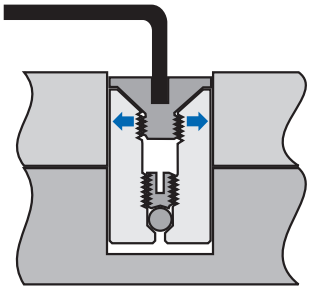

Step 2

Replace the top screw, slide the locating hole of the second part over the dowel and expand top half with a hex wrench.

Lanyards

- To attach lanyard to L or T Pins order Split Ring **890000**
- To permanently attach Lanyard to L or T Pins add -C to Lanyard part number
- For Lanyard &Tab drawings see Kwik-Lok™ Pins in Specialty Fastener Solutions Catalog or Master Catalog

Ordering Lanyards When Supplied Separately Without Pins

Lanyards with Tabs

Length		Round Tab	Oval Tab
		Stainless Steel	Aluminum
inch	mm		
4	102	**890054***	**890104***
6	152	**890056***	**890106***
8	203	**890058***	**890108***
10	254	**890060***	**890110***
12	305	**890062***	**890112***
16	406	**890066***	**890116***
20	508	**890070***	**890120***
24	610	**890074***	**890124***

Substitute the asterisk (*) with the proper hole size letter from Table 1.

Table 1 Tab Hole Size

Tab Mounting Hole Diameter		
Inch	mm	Size Letter
0.131	3.3	P
0.196	4.9	Q
0.257	6.5	R
0.283†	7.1†	S
0.320†	8.1†	T
0.379†	9.6†	U
0.406†	10.3†	V
0.468†	11.8†	W
0.515†	13.1†	Y

(†) These sizes only available in stainless steel round tabs

Lanyards without Tabs

Length		2 Loops	1 Loops (Pin)
inch	mm		
4	102	**890204**	**890254**
6	152	**890206**	**890256**
8	203	**890208**	**890258**
10	254	**890210**	**890260**
12	305	**890212**	**890262**
16	406	**890216**	**890266**
20	508	**890220**	**890270**
24	610	**890224**	**890274**

Lanyard Loop/Eyelet

For Screw Size	
#10	M5
890304	**890404**
890306	**890406**
890308	**890408**
890310	**890410**
890312	**890412**
890316	**890416**
890320	**890420**
890324	**890424**

Slotted Locator Bushing

- Use with L Pins to align two holes without binding.
- Available for 3/16" through 1" diameter pins (6mm-25mm in metric sizes).
- Tool Steel, heat treated to Rc 58-62
- Supplied with Roll Pin: Locate within ±.002" of slot centerline.

Press Fit

Part Number	Pin Dia	A	Dia B	Dia C	D
24301	3/16	.1876/.1882	0.312	0.75	0.400
24302	1/4	.2501/.2507	0.375	0.75	0.400
24303	1/4	.2501/.2507	0.375	1	0.400
24304	5/16	.3126/.3132	0.437	1	0.400
24305	3/8	.3751/.3757	0.5	1	0.400
24306	1/2	.5001/.5007	0.625	1	0.400
24307	1/2	.5001/.5007	0.625	1	0.900
24308	5/8	.6251/.6257	.075	1.25	0.900
24309	3/4	.7501/.7510	0.812	1.5	1.0000
24310	7/8	.8751/.8760	1	1.5	1.0000
24311	1	1.0001/1.0010	1.062	1.5	1.0000

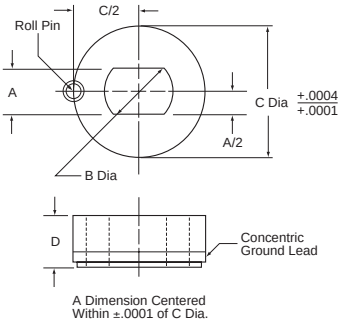

Press Fit Metric

Part Number	Pin Dia	A	Dia B	Dia C	D
24351	6mm	6.00/6.03	9.0	20.000	9.0
24352	8mm	8.00/8.03	11.0	24.000	9.0
24353	10mm	10.00/10.03	13.0	24.000	9.0
24354	12mm	12.00/12.03	15.0	24.000	14.0
24355	16mm	16.00/16.03	18.0	30.000	12.0
24356	20mm	20.00/20.03	22.0	35.999	19.0
24357	25mm	25.00/25.03	27.0	40.000	19.0

Knurled

Part Number	Pin Dia	A	Dia B	Dia C	D
24331	3/16	0.188	0.312	0.565	.50
24332	1/4	0.25	0.375	0.64	.50
24333	5/16	0.313	0.437	0.765	.50
24334	3/8	0.375	0.5	0.89	.50

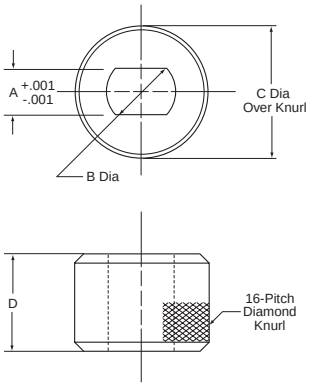

Rest Buttons
Ground and Unground

- Material:
  Ground, Low Carbon Steel
  Unground, 52100
- Finish: Black Oxide
- Heat Treat:
  Ground, Case Hardened
  75-77 R30N
  Unground, 58-62 Rc
- Available in Fixture Pro®
  Design Software

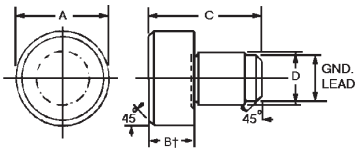

†"B" dimension for ground style is +.0005/-.000, unground +.010/+.015

The Closest Tolerances in the Industry...

Jergens is proud of the close tolerances held on the "B" dimension of our Ground Rest Buttons. When it becomes necessary through constant wear to replace rest buttons, they can be replaced with the assurance of being within .0005 (.013mm) of the original location. Where replacement is not going to be a problem, we recommend the use of the Unground Buttons, which have a +.010 (.25mm) grinding stock to be ground after the fixture is assembled.

Part Number "B" Ground†	Part Number "B" Unground†	A	B	C	D	Wt. (lbs) 10 Pcs.
—	**45719**	1/4	1/4	15/32	.1885-.188	.05
34701*	**45721**	3/8	1/4	15/32	.1885-.188	.08
34702*	**45722**	3/8	3/8	19/32	.1885-.188	.16
34703*	**45723**	3/8	1/2	23/32	.1885-.188	.16
34704*	**45724**	1/2	1/4	23/32	.251-.2505	.16
34705*	**45725**	1/2	3/8	27/32	.251-.2505	.21
34706*	**45726**	1/2	1/2	31/32	.251-.2505	.31
34707*	**45727**	5/8	1/4	23/32	.376-.3755	.31
34708*	**45728**	5/8	3/8	27/32	.376-.3755	.47
—	**45729**	5/8	7/16	29/32	.376-.3755	.50
34709*	**45730**	5/8	1/2	31/32	.376-.3755	.55
34710*	**45731**	5/8	5/8	1 3/32	.376-.3755	.62
34711	**45732**	5/8	3/4	1 7/32	.376-.3755	.78
—	**45733**	7/8	3/8	31/32	.501-.5005	.68
34712	**45734**	7/8	7/16	1 1/32	.501-.5005	.78
—	**45735**	7/8	1/2	1 3/32	.501-.5005	.94
34713*	**45736**	7/8	5/8	1 7/32	.501-.5005	1.10
34714	**45737**	7/8	3/4	1 11/32	.501-.5005	1.25
—	**45738**	1	3/8	1 3/32	.626-.6255	1.20
34715	**45739**	1	7/16	1 5/32	.626-.6255	1.45
34716*	**45740**	1	1/2	1 7/32	.626-.6255	1.65
—	**45741**	1	5/8	1 11/32	.626-.6255	2.00
—	**45742**	1	3/4	1 15/32	.626-.6255	2.50
—	**45743**	1 1/4	3/8	1 7/32	.751-.7505	1.80
—	**45744**	1 1/4	7/16	1 9/32	.751-.7505	2.10
—	**45745**	1 1/4	1/2	1 11/32	.751-.7505	2.50
34717*	**45746**	1 1/4	5/8	1 15/32	.751-.7505	3.10
34718	**45747**	1 1/2	3/4	1 31/32	1.001-1.0005	6.90

*Conforms to TCMA

Rest Buttons
Metric
Ground and Unground

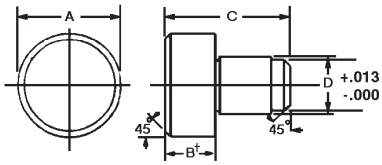

"B" Ground† Part Number	"B" Unground† Part Number	A	B	C	D
34751	**45771**	10	6	12	5
34754	**45774**	13	6	18	6
34757	**45777**	16	6	18	10
34758	**45778**	16	10	22	10
34759	**45780**	16	12	25	10
34763	**45786**	22	16	31	12
34766	**45790**	25	12	30	16

†"B" Dimension for ground style is +.013/-.000mm, ungrounded style is +.25/+.38mm.

Threaded Rest Buttons

- Material: Low Carbon Steel
- Finish: Black Oxide
- Heat Treat: Case Hardened 75-77 R30N
- Thread: 2A-UNF
- Available in Fixture Pro® Design Software

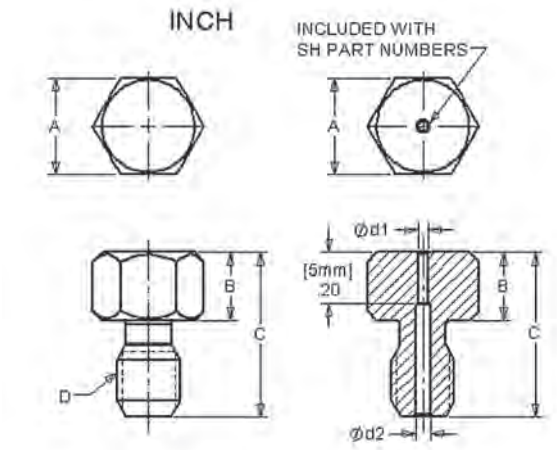

Thread into job instead of press fit. "B" dimension left with .010-.015 for finishing after assembly. For cutter setting blocks on milling fixtures, grind to your own specifications. Case hardened to approximately .030 deep.

Part Number w/o Sensor Hole	Part Number w/ Sensor Hole	A (in.)	B (in.)	C (in.)	D	Thread Pitch	d1 in (mm)	d2 in. (mm)	wt/lbs 10 pcs
21501	**21501-SH**	3/8	1/4	5/8	1/4-28	Fine	0.04 (1.0mm)	0.06 (1.5mm)	0.16
21521	**21521-SH**	3/8	1/4	5/8	1/4-20	Coarse	0.04 (1.0mm)	0.06 (1.5mm)	0.16
21502	**21502-SH**	3/8	3/8	3/4	1/4-28	Fine	0.04 (1.0mm)	0.06 (1.5mm)	0.16
21522	**21522-SH**	3/8	3/8	3/4	1/4-20	Coarse	0.04 (1.0mm)	0.06 (1.5mm)	0.16
21503	**21503-SH**	3/8	1/2	7/8	1/4-28	Fine	0.04 (1.0mm)	0.06 (1.5mm)	0.16
21523	**21523-SH**	3/8	1/2	7/8	1/4-20	Coarse	0.04 (1.0mm)	0.06 (1.5mm)	0.16
21504	**21504-SH**	1/2	1/4	11/16	3/8-24	Fine	0.06 (1.5mm)	0.13 (3.2mm)	0.24
21524	**21524-SH**	1/2	1/4	11/16	3/8-16	Coarse	0.06 (1.5mm)	0.13 (3.2mm)	0.24
21505	**21505-SH**	1/2	3/8	13/16	3/8-24	Fine	0.06 (1.5mm)	0.13 (3.2mm)	0.31
21525	**21525-SH**	1/2	3/8	13/16	3/8-16	Coarse	0.06 (1.5mm)	0.13 (3.2mm)	0.31
21506	**21506-SH**	1/2	1/2	15/16	3/8-24	Fine	0.06 (1.5mm)	0.13 (3.2mm)	0.47
21526	**21526-SH**	1/2	1/2	15/16	3/8-16	Coarse	0.06 (1.5mm)	0.13 (3.2mm)	0.47
21507	**21507-SH**	1/2	3/4	1 3/16	3/8-24	Fine	0.06 (1.5mm)	0.13 (3.2mm)	0.47
21527	**21527-SH**	1/2	3/4	1 3/16	3/8-16	Coarse	0.06 (1.5mm)	0.13 (3.2mm)	0.47
21508	**21508-SH**	3/4	3/8	15/16	1/2-20	Fine	0.06 (1.5mm)	0.17 (4.3mm)	0.78
21528	**21528-SH**	3/4	3/8	15/16	1/2-13	Coarse	0.06 (1.5mm)	0.17 (4.3mm)	0.78
21509	**21509-SH**	3/4	1/2	1 1/16	1/2-20	Fine	0.06 (1.5mm)	0.17 (4.3mm)	0.94
21529	**21529-SH**	3/4	1/2	1 1/16	1/2-13	Coarse	0.06 (1.5mm)	0.17 (4.3mm)	0.94
21510	**21510-SH**	3/4	3/4	1	1 9/16	Fine	0.06 (1.5mm)	0.17 (4.3mm)	1.56
21530	**21530-SH**	3/4	1	1 9/16	1/2-13	Coarse	0.06 (1.5mm)	0.17 (4.3mm)	1.56
21511	**21511-SH**	1	1/2	1 3/16	5/8-18	Fine	0.06 (1.5mm)	0.17 (4.3mm)	1.72
21531	**21531-SH**	1	1/2	1 3/16	5/8-11	Coarse	0.06 (1.5mm)	0.17 (4.3mm)	1.72
21512	**21512-SH**	1	1 1/2	2 3/16	5/8-18	Fine	0.06 (1.5mm)	0.17 (4.3mm)	4.10
21532	**21532-SH**	1	1 1/2	2 3/16	5/8-11	Coarse	0.06 (1.5mm)	0.17 (4.3mm)	4.10

Threaded Rest Buttons

Metric

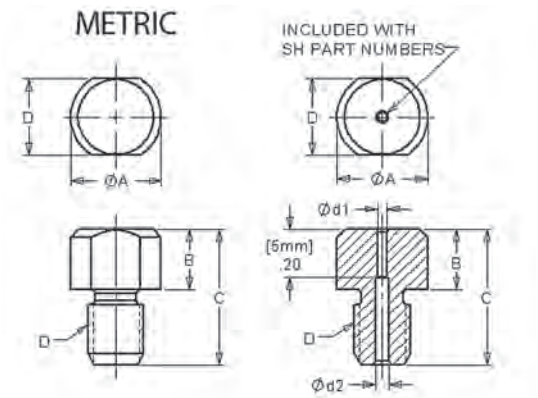

- Material: Low Carbon Steel
- Finish: Black Oxide
- Heat Treat: Case Hardened 75-77 R30N
- Thread: Class 6g

Part Number w/o Sensor Hole	Part Number W/ Sensor Hole	A (mm)	B (mm)	C (mm)	D	Across Flats E (mm)	d1 (mm)	d2 (mm)	wt/lbs 10 pcs
21551	**21551-SH**	10	6	14	M6x1.0	8	1.0	1.5	0.10
21554	**21554-SH**	13	6	14	M10X1.5	10	1.5	3.2	0.20
21558	**21558-SH**	16	10	25	M12X1.75	14	1.5	4.3	0.60
21561	**21561-SH**	25	12	30	M16X2.0	20	1.5	4.3	1.52

Carbide Insert Rest Buttons

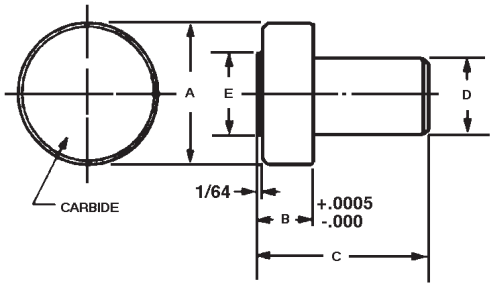

- Material: Body, Low Carbon Steel
  Insert, Carbide
- Available in Fixture Pro® Design Software

Part Number	A	B	C	D	E	Wt. (lbs) 10 Pcs.
34901	1/2	.250	23/32	.2505/.2510	3/8	.25
34902	5/8	.250	23/32	.3755/.3760	3/8	.42
34903	5/8	.375	27/32	.3755/.3760	3/8	.58
34904	3/4	.4375	1 1/32	.5005/.5010	1/2	.92
34905	1	.4375	1 5/32	.6255/.6260	3/4	1.80

Metric Carbide Insert Rest Buttons

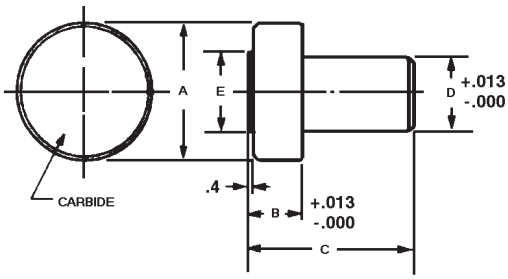

- Material: Body, Low Carbon Steel
  Insert, Carbide

Part Number	A	B	C	D	E
34951	13	6	18	6	10
34953	16	10	22	10	10
34955	25	12	30	16	19

Rest Pad

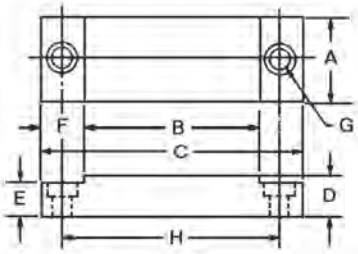

Jergens Feature:

By holding close tolerances on the "D" dimension, when replacement becomes necessary, your original tolerances are maintained within .0005 (.013)

- Material: Low Carbon Steel
- Finish: Black Oxide
- Heat Treat: Case Hardened 75-77 R30N
- Available in Fixture Pro® Design Software

Rest Pads are designed to be used when you need a larger hardened wearing surface for heavy duty applications. Rest Pads can also be used as hardened work rests or as wear plates on your jigs and fixtures.

Part Number	A	B	C	+0.0005 -0.000 D	E	F	G	H	Wt. (lbs)
35901	1	1	2	.475	3/8	1/2	#10	1 1/2	.22
35902	1 1/2	1 1/2	2 1/2	.600	1/2	1/2	1/4	2	.58
35904	1	2	3 1/2	.720	5/8	3/4	5/16	2 3/4	.63
35905	1	3	4 1/2	.720	5/8	3/4	5/16	3 3/4	.84
35906	1	4	5 1/2	.720	5/8	3/4	5/16	4 3/4	1.06

Metric

Part Number	A	B	C	+0.013 -0.000 D	E	F	G	H
35951	25	25	50	12	10	13	M5	38
35952	25	38	64	15	13	13	M6	50
35954	25	50	89	18	16	19	M8	70

Rest Pad

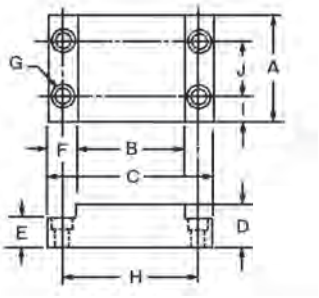

Rest Pads are designed to be used when you need a larger hardened wearing surface for heavy duty applications. Rest Pads can also be used as hardened work rests or as wear plates on your jigs and fixtures.

- Material: Low Carbon Steel
- Finish: Black Oxide
- Heat Treat: Case Hardened 75-77 R30N
- Available in Fixture Pro® Design Software

Part Number	A	B	C	+0.0005 -0.000 D	E	F	G	H	I	J	Wt. (lbs)
35903	2	2	3	.725	1/2	1/2	1/4	2 1/2	1/2	1	1.06

Metric

Part Number	A	B	C	+0.013 -0.000 D	E	F	G	H	I	J
35953	50	50	75	18	12	13	M6	64	13	25

Jig Feet

- Material: Low Carbon Steel
- Finish: Black Oxide
- Cap Screw included
- Heat Treat: Case Hardened 75-77 R30N
- Available in Fixture Pro® Design Software

Jergens Feature:

By holding close tolerances on the "B" dimension, when replacement becomes necessary, your original tolerances are maintained within .0005 (.013)

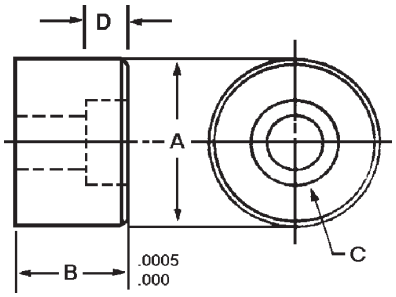

Part Number	A	+0.0005 -0.000 B	Socket Head Capscrew C	D	Wt. (lbs) 10 Pcs.
25701*	5/8	3/8	1/4-20 x 3/8	9/32	.31
25702*	5/8	1/2	1/4-20 x 1/2	9/32	.31
25703*	5/8	5/8	1/4-20 x 5/8	9/32	.47
25704*	5/8	3/4	1/4-20 x 3/4	9/32	.55
25705	5/8	7/8	1/4-20 x 7/8	9/32	.62
25706	5/8	1	1/4-20 x 1	9/32	.78
25707*	7/8	1/2	5/16-18 x 1/2	11/32	.78
25708*	7/8	5/8	5/16-18 x 5/8	11/32	.94
25709*	7/8	3/4	5/16-18 x 3/4	11/32	1.03
25710	7/8	7/8	5/16-18 x 7/8	11/32	1.12
25711*	7/8	1	5/16-18 x 1	11/32	1.15
25712	7/8	1 1/8	5/16-18 x 1 1/4	11/32	1.17
25713	7/8	3/4	3/8-16 x 3/4	13/32	1.11
25714*	1 1/4	3/4	3/8-16 x 3/4	13/32	2.50
25715	1 1/4	7/8	3/8-16 x 7/8	13/32	2.70
25716*	1 1/4	1	3/8-16 x 1	13/32	3.30
25717*	1 1/4	1 1/2	3/8-16 x 1 1/2	13/32	5.00
25718	1 1/4	2	3/8-16 x 2	13/32	6.60
25719	1 5/8	1 1/4	1/2-13 x 1 1/2	17/32	7.00
25720	1 5/8	1 3/4	1/2-13 x 1 3/4	17/32	9.80
25721	1 5/8	2 1/4	1/2-13 x 2 1/2	17/32	13.75

*Conforms to TCMA

Metric Jig Feet

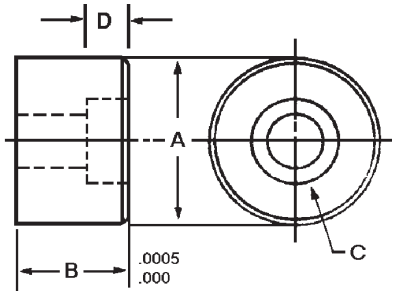

Part Number	A	+0.013 -0.000 B	Socket Head Capscrew C	D
25751	16	10	M6 x 10	7
25752	16	12	M6 x 12	7
25754	16	20	M6 x 20	7
25757	22	12	M8 x 12	9
25759	22	20	M8 x 20	9
25761	22	24	M8 x 25	9
25766	32	24	M10 x 25	11

Jig Legs

The Jergens Jig Legs are ideal for cutting costs in simple jig plates. They assure lasting accuracy in your jig plate with a larger bearing surface at the top the the leg. The large diameter rest button provides more bearing surface for spot facing or counterboring on the bottom side. Both legs and rest buttons are hardened for long life.

- Material: Low Carbon Steel
- Finish: Black Oxide
- Heat Treat: Case Hardened 75-77 R30N
- Cap Screw Included
- Available in Fixture Pro® Design Software

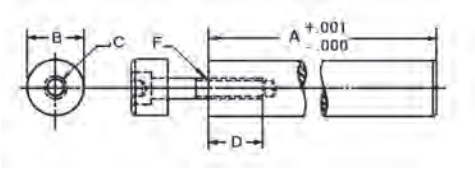

Part Number	A	B	C	D	Cap Screw F	Wt. (lbs)
25301	1	5/8	1/4-20	5/8	1/4-20 x 1	.13
25302	2	5/8	1/4-20	5/8	1/4-20 x 1	.20
25303	3	5/8	1/4-20	7/8	1/4-20 x 1	.28
25304	4	7/8	3/8-16	7/8	3/8-16 x 1 3/4	.81
25305	5	7/8	3/8-16	7/8	3/8-16 x 1 3/4	1.00
25306	6	7/8	3/8-16	7/8	3/8-16 x 1 3/4	1.10

Flat Feet

- Material: Low Carbon Steel
- Heat Treat: Case Hardened 75-77 R30N
- Cap Screw Included
- Available in Fixture Pro® Design Software

Jergens Feature:

By holding close tolerances on the "B" dimension, when replacement becomes necessary, your original tolerances are maintained within .0005 (.013mm)

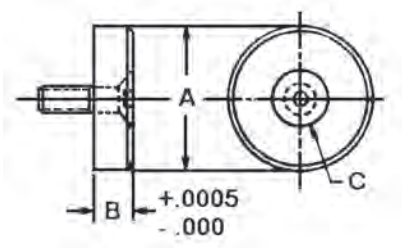

Part Number	A	+0.0005 -0.000 B	Flat Head Screw C	Wt. (lbs) 10 Pcs
19301	1/2	1/8	8-32 x 3/8	.06
19302	1/2	1/4	8-32 x 1/2	.16
19303	5/8	1/4	10-32 x 5/8	.21
19304	7/8	3/8	1/4-20 x 3/4	.62
19305	1 1/4	3/8	5/16-18 x 3/4	1.25
19306	1 5/8	3/8	3/8-16 x 3/4	2.20

Metric

Part Number	A	+0.013 -0.000 B	Flat Head Screw C	Wt. (Kg) 10 Pcs
19351	13	3	M4 x 10	.03
19352	13	6	M4 x 12	.09
19353	16	6	M5 x 16	.11
19354	22	10	M6 x 20	.33
19355	31	10	M8 x 20	.47

Work Support Jacks

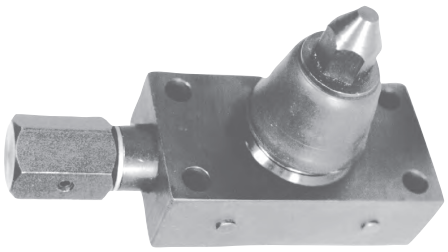

The Jergens Spring Loaded Work Jacks provide consistent support and rigidity to odd shaped workpieces. They are designed to prevent workpiece deflection under forces created during machining operations. Precision mated locking jaws grip the jackpost from both sides creating a vise-like action.

- Load capacities 300-4500 lbs.
- Rugged design
- Quality construction
- Dual jaw locking action
- Rubber boot or dust cap models available

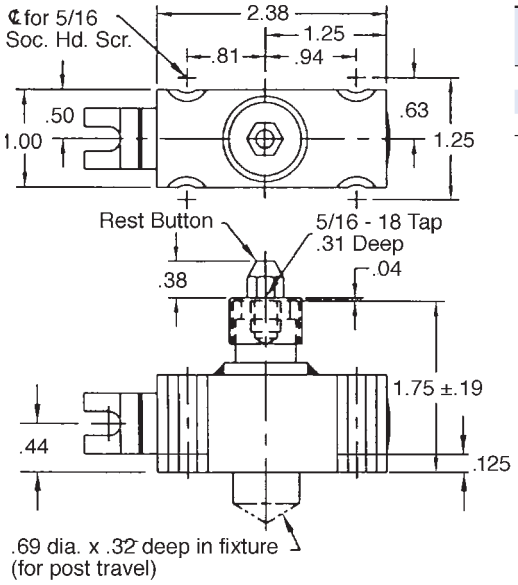

25201

Riser Optional on Part Number 25207 & 25208	
1/4"	**25211**
1/2"	**25212**
3/4"	**25213**

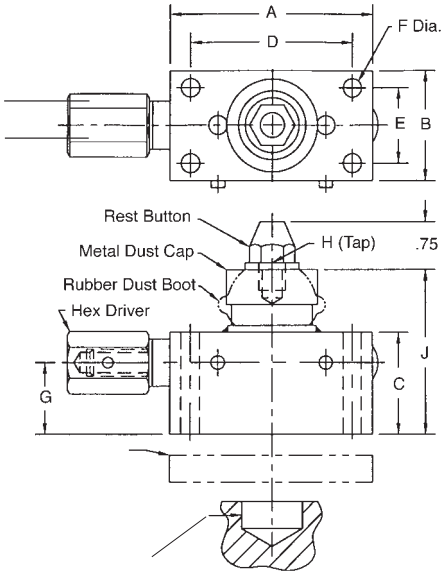

If risers are not used, hole must be provided in fixture base:
1.12" dia. x .50" deep for Part No.'s 25207 & 25208

Part Number	Load Rating	Type Of Dust Protector	Type Of Driver	A	B	C	D	E	Dia. F	G	Tap H	Jackpost J Mean Ht.	Jackpost J Travel
25201	300 lbs at 10 ft-lbs Torque	Cap	Slotted, See Detailed View for Dimensions									1.75	±.19
25203	1400 lbs	Cap	.750 Hex	3.75	2.00	2.00	3.00	1.38	11/32	1.13	3/8-16 .44 Deep	3.31	±.25
25207	2500 lbs	Cap	.750 Hex	3.75	2.00	1.12	3.00	1.38	11/32	.56	3/8-16 .44 Deep	2.38	±.25
25205	4500 lbs	Cap	.937 Hex	4.54	2.50	2.50	3.50	1.88	13/32	1.63	1/2-13 .59 deep	4.13	±.38

Fixture Jacks

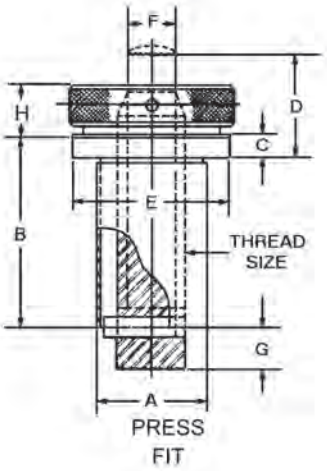

Designed as a positive locking jack for irregular clamping to achieve various heights requiring a positive pressure stop. Adjustable to fit height irregularities of milling operations. Available in either a smooth radius head or a hardened tool steel serrated gripping surface. Elevates vertically, no rotation. Outer diameter of bushing ground for press-fit.

- Material: Bushing, Low Carbon Steel
  Radius Stem, Low Carbon Steel
  Serrated Stem, 4140
- Finish: Bushing, Black Oxide
  Radius Stem, Black Oxide
  Serrated Stem, Black Oxide
- Heat Treat: Bushing, Case Hardened
  74-77 R30N
  Radius Stem, Case Hardened
  Serrated Stem, Rc 45-48
- Available in Fixture Pro® Design Software

Part Number Radius	Part Number Serrated	Press Fit A	B	C	D Min.	D Max.	E	F	G	H	Thread Size	Wt. (lbs)
24901	**25101**	5/8	1 3/16	3/16	9/16	1 1/2	1	1/4	5/32	3/8	3/8-16	.19
24902	**25102**	1	1 5/8	3/16	7/8	2 7/16	1 5/16	15/32	7/16	7/16	5/8-11	.55
24903	**25103**	1 1/2	2 3/4	3/16	7/8	3 1/2	1 3/4	13/16	1/2	9/16	1-8	1.90

Adjustable Jack Screws

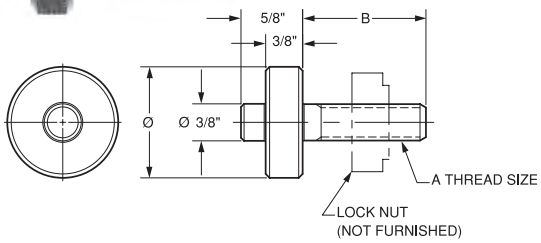

- Material: Low Carbon Steel
- Finish: Black Oxide
- Heat Treat: Screw/Stem Case Hardened 87-92 R15N

Part Number	A	B	C	Wt. (lbs)	Lock Nut (Not Included)
25001	3/8-16	1-1/4	1-1/8	0.15	28101
25003	3/8-16	2	1-1/8	0.18	28101
25005	1/2-13	1-5/8	1-1/8	0.20	28102
25007	1/2-13	2-1/2	1-1/8	0.25	28102
25009	5/8-11	2	1-3/8	0.34	28103
25011	5/8-11	3	1-3/8	0.43	28103

Adjustable Locating Buttons

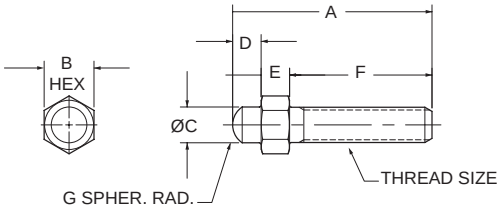

- Material: Low Carbon Steel
- Finish: Black Oxide
- Heat Treat: Case Hardened 87-92 R15N

Part Number	Thread Size	A	B	C	D	E	F	G
21401	10-32	1	1/4	3/16	1/8	1/8	3/4	1/8
21402	1/4-28	1 1/2	3/8	1/4	3/16	3/16	1 1/8	3/16
21403	5/16-24	1 3/4	7/16	5/16	1/4	1/4	1 1/4	3/16
21404	3/8-24	2	1/2	3/8	1/4	1/4	1 1/2	1/4
21405	1/2-20	2 1/2	5/8	1/2	5/16	5/16	1 7/8	5/16
21406	5/8-18	3	3/4	5/8	3/8	3/8	1 1/4	3/8
21407	3/4-16	3 1/2	7/8	3/4	7/16	7/16	2 5/8	7/16

Standard Fixture Keys

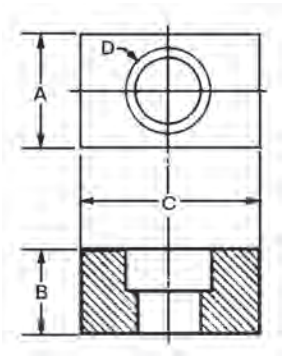

- Material: C-1018
- Finish: Black Oxide
- Heat Treat: Case Hardened 74-77 R30N
- Available in Fixture Pro® Design Software

Part Number	-0.0005 -0.0010 A	B	C	Socket Head Screw D	Wt. (lbs) 10 Pcs.
19701*	.5000	1/2	3/4	1/4	.14
19702*	.5625	1/2	3/4	1/4	.65
19703*	.6250	1/2	3/4	5/16	.68
19704*	.6875	1/2	1	5/16	.98
19705	.7500	1/2	1 1/4	5/16	1.10
19706	.8125	1/2	1 1/4	5/16	1.25

*Conforms to TCMA

Metric

Part Number	-0.0013 -0.0026 A	B	C	Socket Head Screw D
19751	12	13	19	M5
19752	14	14	22	M6
19753	16	13	22	M6
19754	18	14	22	M6
19755	20	13	22	M6
19756	22	13	32	M6

Drift Handles

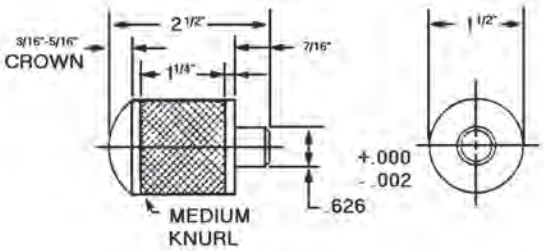

Part Number	Wt. (lbs)
22901	1.0

- Material: AISI-S7
- Finish: Black Oxide
- Heat Treat: Rc 44-48
- Available in Fixture Pro® Design Software

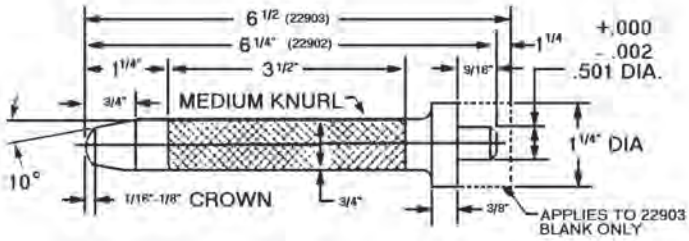

Part Number	Wt. (lbs)
22902	1.1
22903	1.2

Compare The Jergens Sine Fixture Key Method To The Standard Method

Construct a fixture to mill slots in castings A, B, and C. The locator pins to be common.

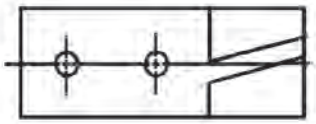

A

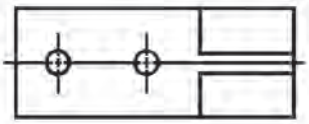

B

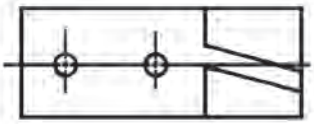

C

Present Method

A total of 11.2 hours was required to complete this fixture base with finished edge, milled fixture key slots, bored locator pin holes and drilled and tapped set screw holes.

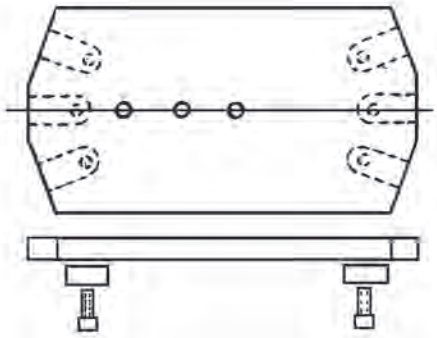

PRESENT METHOD	TIME
1. Finish one edge.	.5 hours
2. Locate on jig bore and bore locating point and two locator pin holes	1.75 hours
3. Relocate, position and mill two fixture key slots.	1.75 hours
4. Relocate and, by use of sine bar or other positioning device, establish and mill two fixture key slots.	2.35 hours
5. For opposite slots-same as above	2.35 hours
6. Drill and tap six holes for holding fixture keys in slots.	1.5 hours
7. Set up and perform inspection-if inaccurate, reroute for reworking.	1.0 hours
TOTAL TIME REQUIRED	11.2 hours

Jergens Method

It took only 5 1/2 hours to complete this fixture with bored sine fixture key holes and bored locator pin holes

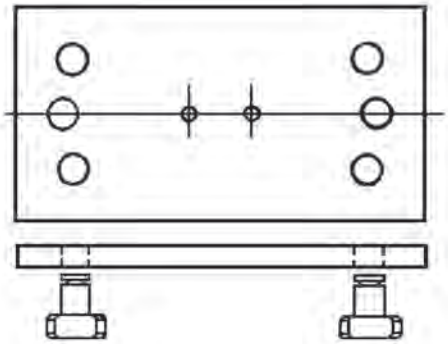

JERGENS METHOD	TIME
1. Eliminated.	
2. One set-up serves for establishing locator holes and sine fixture keys.	4.5 hours
3. Eliminated.	
4. Eliminated	
5. Eliminated.	
6. Eliminated.	
7. Inspect on original set-up.	1.0 hours
TOTAL TIME REQUIRED	5.5 hours

ON THIS PARTICULAR FIXTURE - SAVE OVER 50% OF SET-UP TIME!

Sine Fixture Keys

- Material: 4140
- Heat Treat: 26-30
- Available in Fixture Pro® Design Software
- Reduce fixture costs
- Cut extra set-up time
- Completely interchangeable
- Fits many table slot sizes

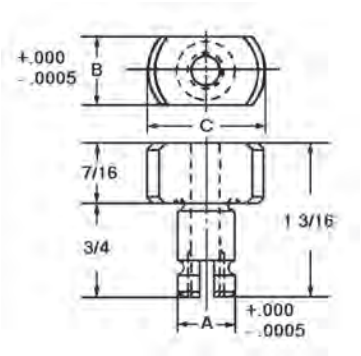

Jergens Feature:

Full 360° contact for more accurate locating.

Sine Fixture Keys locate jigs and fixtures on machine tool tables and position the part in one operation. They eliminate the need to slot fixture bases, make step fixture keys, or drill and tap keys. Simply ream two holes, depending upon the shank size shown in the table below.

The unique expansion shaft allows the key to be locked in the fixture from either the top or the bottom using a standard hex wrench.

Part Number	Shank Size A	Slot Size B	C	Wt. (lbs)	Recommended Hole Diameter
39501	.625	.4995	1	.09	**.625 Shank Size:** 0.6255 ± 0.0005
39502	.625	.562	1	.11	
39503	.625	.6245	1	.11	
39504	.625	.687	1	.11	
39505	.625	.7495	1 1/8	.13	
39506	.625	.812	1 1/8	.14	
39507	.625	.8745	1 1/8	.15	
39509	.750	.9995	1 3/8	.22	**.75 Shank Size:** 0.7505 ± 0.0005
39510	.750	1.062	1 3/8	.23	

Metric Sine Fixture Keys

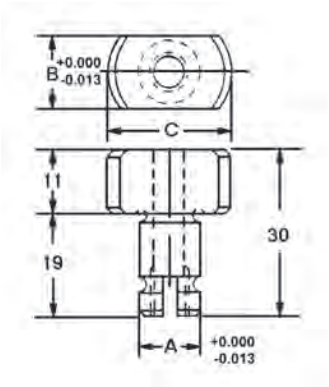

Part Number	Shank Size A	Slot Size B	C	Wt. (kg)	Recommended Hole Diameter
39550	16	10	25	.04	**16mm Shank Size:** 16.01 ± 0.01
39551	16	12	25	.04	
39552	16	14	25	.05	
39553	16	16	25	.05	
39554	16	18	29	.05	
39555	16	20	29	.06	
39556	16	22	29	.06	
39557	20	24	35	.07	**20mm Shank Size:** 20.01 ± 0.01
39558	20	28	35	.10	
39559	20	32	40	.10	

Metric Slot/Inch Shank

Used primarily for adapting existing fixtures with inch locating holes to metric table slots.

Part Number	Shank Size A	Slot Size (Mm) B	C	Wt. (lbs)	Recommended Hole Diameter
39561	.625	12	1	.09	0.6255 ± 0.0005
39562	.625	14	1	.09	
39563	.625	16	1	.11	
39564	.625	18	1 1/8	.11	
39565	.625	20	1 1/8	.14	
39566	.625	22	1 1/8	.15	

Jergens
WORKHOLDING SOLUTIONS GROUP

Locating Pins-Slip Fit
Round

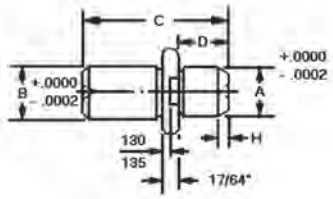

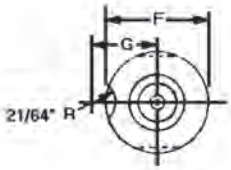

- Material: Low Carbon Steel
- Heat Treat: Case Hardened 74-77 R30N
- Available in Fixture Pro® Design Software

- Sizes range from1/8" to 1" head diameters
- Concentricity in both diameters is held within .0002
- For special applications we will grind the "A" dimension to your specifications
- Quick turnaround on specials
- May be used in bushing applications or press fit with Lock Screws.

Part Number Round	A	B	C	D	F	G	H	Wt. (lbs) 10 Pcs.
29101*	.1245	5/16	1 3/16	7/16	5/8	33/64	1/32	.31
29102	.1401	5/16	1 3/16	7/16	5/8	33/64	1/32	.31
29103*	.1558	5/16	1 3/16	7/16	5/8	33/64	3/64	.31
29104	.1714	5/16	1 3/16	7/16	5/8	33/64	3/64	.31
29105*	.1870	5/16	1 3/16	7/16	5/8	33/64	1/16	.31
29106	.2026	5/16	1 3/16	7/16	5/8	33/64	1/16	.31
29107*	.2183	5/16	1 3/16	7/16	5/8	33/64	5/64	.31
29108	.2339	5/16	1 3/16	7/16	5/8	33/64	3/32	.31
29109*	.2495	5/16	1 3/16	7/16	5/8	33/64	3/32	.31
29110	.2651	5/16	1 3/16	7/16	5/8	33/64	3/32	.31
29111*	.2808	5/16	1 3/16	7/16	5/8	33/64	3/32	.36
29112	.2964	5/16	1 3/16	7/16	5/8	33/64	3/32	.36
29113*	.3120	5/16	1 3/16	7/16	5/8	33/64	3/32	.36
29114*	.3115	1/2	1 1/2	1/2	7/8	41/64	1/8	.90
29115	.3271	1/2	1 1/2	1/2	7/8	41/64	1/8	.90
29116*	.3428	1/2	1 1/2	1/2	7/8	41/64	1/8	.90
29117	.3584	1/2	1 1/2	1/2	7/8	41/64	1/8	.90
29118*	.3740	1/2	1 1/2	1/2	7/8	41/64	1/8	.90
29119	.3896	1/2	1 1/2	1/2	7/8	41/64	1/8	.90
29120*	.4053	1/2	1 1/2	1/2	7/8	41/64	1/8	.90
29121	.4209	1/2	1 1/2	1/2	7/8	41/64	1/8	.90
29122*	.4365	1/2	1 1/2	1/2	7/8	41/64	1/8	.90
29123	.4521	1/2	1 1/2	1/2	7/8	41/64	1/8	.95
29124*	.4678	1/2	1 1/2	1/2	7/8	41/64	1/8	.95
29125	.4834	1/2	1 1/2	1/2	7/8	41/64	1/8	1.00
29126*	.4990	1/2	1 1/2	1/2	7/8	41/64	1/8	1.00
29127*	.4980	3/4	1 15/16	11/16	1 1/8	49/64	3/16	2.0
29128*	.5293	3/4	1 15/16	11/16	1 1/8	49/64	3/16	2.0
29129*	.5605	3/4	1 15/16	11/16	1 1/8	49/64	3/16	2.5
29130*	.5918	3/4	1 15/16	11/16	1 1/8	49/64	3/16	2.5
29131*	.6230	3/4	1 15/16	11/16	1 1/8	49/64	3/16	2.5
29132*	.6543	3/4	1 15/16	11/16	1 1/8	49/64	3/16	2.5
29133*	.6855	3/4	1 15/16	11/16	1 1/8	49/64	3/16	2.5
29134*	.7168	3/4	1 15/16	11/16	1 1/8	49/64	3/16	2.5
29135*	.7480	3/4	1 15/16	11/16	1 1/8	49/64	3/16	2.5
29136*	.7480	1	2 5/8	1	1 1/2	61/64	9/32	5.0
29137*	.7793	1	2 5/8	1	1 1/2	61/64	9/32	5.0
29138*	.8105	1	2 5/8	1	1 1/2	61/64	9/32	5.0
29139*	.8418	1	2 5/8	1	1 1/2	61/64	9/32	5.0
29140*	.8730	1	2 5/8	1	1 1/2	61/64	9/32	5.0
29141*	.9043	1	2 5/8	1	1 1/2	61/64	9/32	5.0
29142*	.9355	1	2 5/8	1	1 1/2	61/64	9/32	5.0
29143*	.9668	1	2 5/8	1	1 1/2	61/64	9/32	5.0
29144*	.9980	1	2 5/8	1	1 1/2	61/64	9/32	5.0

* Conforms to TCMA
See page 224 for Liners and Lock Screws.

Locating Pins-Slip Fit
Relieved

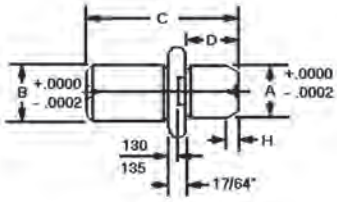

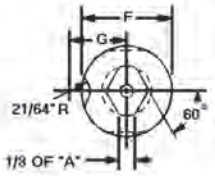

- Material: Low Carbon Steel
- Heat Treat: Case Hardened 74-77 R30N
- Available in Fixture Pro® Design Software

- Sizes range from 1/8" to 1" head diameters
- Concentricity in both diameters is held within .0002
- For special applications we will grind the "A" dimension to your specifications
- Quick turn-around on specials
- May be used in bushing applications or press fit with lock screws.

Part Number Relieved	A	B	C	D	F	G	H	Wt. (lbs) 10 Pcs.
29301*	.1245	5/16	1 3/16	7/16	5/8	33/64	1/32	.31
29302	.1401	5/16	1 3/16	7/16	5/8	33/64	1/32	.31
29303*	.1558	5/16	1 3/16	7/16	5/8	33/64	3/64	.31
29304	.1714	5/16	1 3/16	7/16	5/8	33/64	3/64	.31
29305*	.1870	5/16	1 3/16	7/16	5/8	33/64	1/16	.31
29306	.2026	5/16	1 3/16	7/16	5/8	33/64	1/16	.31
29307*	.2183	5/16	1 3/16	7/16	5/8	33/64	5/64	.31
29308	.2339	5/16	1 3/16	7/16	5/8	33/64	3/32	.31
29309*	.2495	5/16	1 3/16	7/16	5/8	33/64	3/32	.31
29310	.2651	5/16	1 3/16	7/16	5/8	33/64	3/32	.31
29311*	.2808	5/16	1 3/16	7/16	5/8	33/64	3/32	.36
29312	.2964	5/16	1 3/16	7/16	5/8	33/64	3/32	.36
29313*	.3120	5/16	1 3/16	7/16	5/8	33/64	3/32	.36
29314*	.3115	1/2	1 1/2	1/2	7/8	41/64	1/8	.90
29315	.3271	1/2	1 1/2	1/2	7/8	41/64	1/8	.90
29316*	.3428	1/2	1 1/2	1/2	7/8	41/64	1/8	.90
29317	.3584	1/2	1 1/2	1/2	7/8	41/64	1/8	.90
29318*	.3740	1/2	1 1/2	1/2	7/8	41/64	1/8	.90
29319	.3896	1/2	1 1/2	1/2	7/8	41/64	1/8	.90
29320*	.4053	1/2	1 1/2	1/2	7/8	41/64	1/8	.90
29321	.4209	1/2	1 1/2	1/2	7/8	41/64	1/8	.90
29322*	.4365	1/2	1 1/2	1/2	7/8	41/64	1/8	.90
29323	.4521	1/2	1 1/2	1/2	7/8	41/64	1/8	.95
29324*	.4678	1/2	1 1/2	1/2	7/8	41/64	1/8	.95
29325	.4834	1/2	1 1/2	1/2	7/8	41/64	1/8	1.00
29326*	.4990	1/2	1 1/2	1/2	7/8	41/64	1/8	1.00
29327*	.4980	3/4	1 15/16	11/16	1 1/8	49/64	3/16	2.0
29328*	.5293	3/4	1 15/16	11/16	1 1/8	49/64	3/16	2.0
29329*	.5605	3/4	1 15/16	11/16	1 1/8	49/64	3/16	2.5
29330*	.5918	3/4	1 15/16	11/16	1 1/8	49/64	3/16	2.5
29331*	.6230	3/4	1 15/16	11/16	1 1/8	49/64	3/16	2.5
29332*	.6543	3/4	1 15/16	11/16	1 1/8	49/64	3/16	2.5
29333*	.6855	3/4	1 15/16	11/16	1 1/8	49/64	3/16	2.5
29334*	.7168	3/4	1 15/16	11/16	1 1/8	49/64	3/16	2.5
29335*	.7480	3/4	1 15/16	11/16	1 1/8	49/64	3/16	2.5
29336*	.7480	1	2 5/8	1	1 1/2	61/64	9/32	5.0
29337*	.7793	1	2 5/8	1	1 1/2	61/64	9/32	5.0
29338*	.8105	1	2 5/8	1	1 1/2	61/64	9/32	5.0
29339*	.8418	1	2 5/8	1	1 1/2	61/64	9/32	5.0
29340*	.8730	1	2 5/8	1	1 1/2	61/64	9/32	5.0
29341*	.9043	1	2 5/8	1	1 1/2	61/64	9/32	5.0
29342*	.9355	1	2 5/8	1	1 1/2	61/64	9/32	5.0
29343*	.9668	1	2 5/8	1	1 1/2	61/64	9/32	5.0
29344*	.9980	1	2 5/8	1	1 1/2	61/64	9/32	5.0

* Conforms to TCMA
See page 224 for Liners and Lock Screws.

Locating Pin Liners

• Material: 52100 Steel

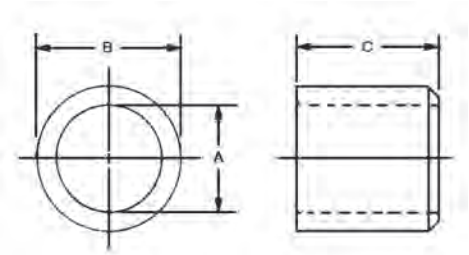

Part Number	A	B	C	Wt. (lbs) 10 Pcs.
28501	.3129 .3126	.5017 .5014	1/2	.16
28502	.5005 .5002	.7518 .7515	3/4	.47
28503	.7506 .7503	1.0018 1.0015	1	.94
28504	1.0007 1.0004	1.3772 1.3768	1 3/8	2.80

Locating Pin Shoulder Liners

• Material: 52100 Steel

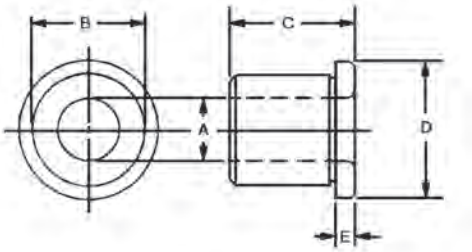

Part Number	A	B	C	D	E	Wt. (lbs) 10 Pcs.
40901	.3129 .3126	.5017 .5014	1/2	5/8	3/32	.16
40902	.5005 .5002	.7518 .7515	3/4	7/8	3/32	.47
40903	.7506 .7503	1.0018 1.0015	1	1 1/8	1/8	.94
40904	1.0007 1.0004	1.3772 1.3768	1 3/8	1 1/2	1/8	2.65

Locating Pin Lock Screws

- Material: Low Carbon Steel
- Finish: Black Oxide
- Heat Treat: Case Hardened
- Thread: 2A-UNC

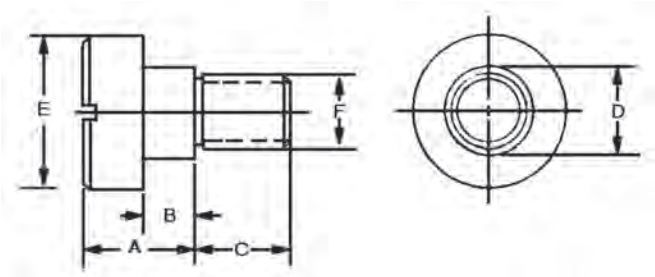

Part Number	A	B	C	D	E	F	Wt. (lbs) 10 Pcs.
10101	1/4	.135	3/8	3/8	5/8	5/16-18	.16

Bullet Nose Dowels

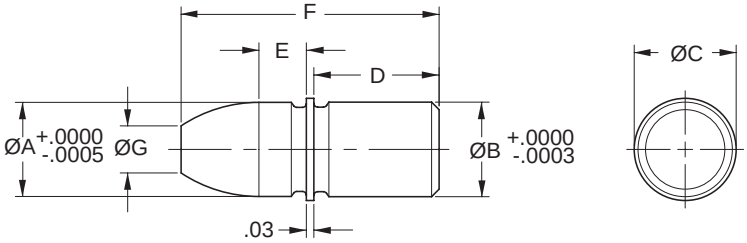

Bullet Nose Dowels are used for aligning two pieces of a fixture together.

- Pin and head centric within .0005 TIR
- Bushing ID and OD concentric within .0003 TIR
- Material: Low carbon steel
- Heat Treat: Case hardened 72-82 R30N
- Ground finish

Bullet-Nose Dowels

Part Number	A	B	C	D	E	F	G
29221	.2499	.2516	.280	1/2	.12	.90	1/8
29222	.3124	.3141	.344	1/2	.16	.94	5/32
29223	.3749	.3766	.407	1/2	.19	1.03	3/16
29224	.4999	.5017	.532	1/2	.19	1.09	1/4

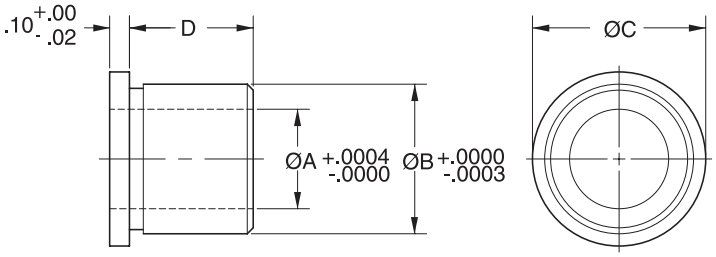

Bullet-Nose Dowel Liners (Bushings)

Part Number	A	B	C	D
40921	.2501	.5017	5/8	3/8
40922	.3126	.5017	5/8	3/8
40923	.3751	.6267	3/4	1/2
40924	.5001	.7518	7/8	5/8

Pilot Locating Pins

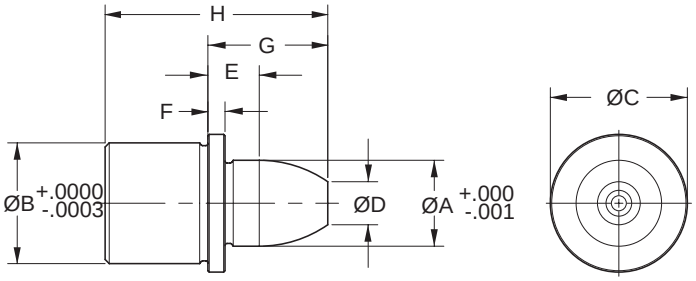

- Material: Low carbon steel
- Heat Treat: Case hardened 72-82 R30N
- Ground finish

Pilot Locating Pins

Part Number	A	B	C	D	E	F	G	H
29231	.249	.4078	9/16	5/32	9/32	3/32	15/32	27/32
29232	.312	.5017	5/8	3/16	9/32	3/32	15/32	27/32
29233	.624	.8768	1	5/16	3/8	1/8	7/8	1 5/8

Bullet Nose Pins

Bullet-Nose Pins – Round

Bullet-Nose Pins – Relieved

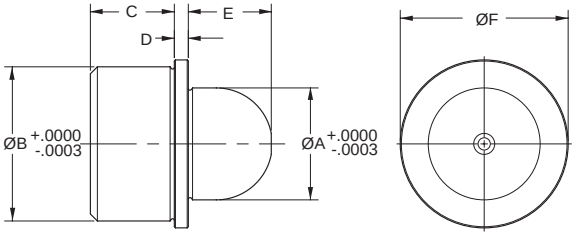

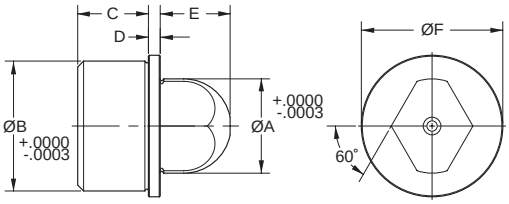

Bullet-Nose Pins – Round

Part Number	A	B	C	D	E	F
29201	.2499	.4078	3/8	1/16	7/32	9/16
29202	.3124	.5017	3/8	1/16	9/32	5/8
29203	.3749	.6267	1/2	1/16	5/16	3/4
29204	.4998	.7518	1/2	1/16	13/32	7/8
29205	.7498	1.0018	3/4	1/8	9/16	1 1/8
29206	.9998	1.3771	3/4	1/8	3/4	1 1/2

Bullet-Nose Pins – Relieved

Part Number	A	B	C	D	E	F
29211	.2499	.4078	3/8	1/16	7/32	9/16
29212	.3124	.5017	3/8	1/16	9/32	5/8
29213	.3749	.6267	1/2	1/16	5/16	3/4
29214	.4998	.7518	1/2	1/16	13/32	7/8
29215	.7498	1.0018	3/4	1/8	9/16	1 1/8
29216	.9998	1.3771	3/4	1/8	3/4	1 1/2

Bullet Nose Pins are used for aligning two pieces of a fixture together. The round and relieved style are used in conjunction with a matching bushing to locate radially on the round pin. The flats on the relieved pin prevents binding, yet allows a high degree of accuracy to be maintained.

- Material: Low carbon steel
- Heat Treat: Case hardened 72-82 R3ON
- Ground finish

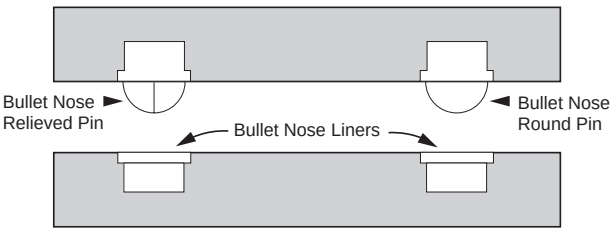

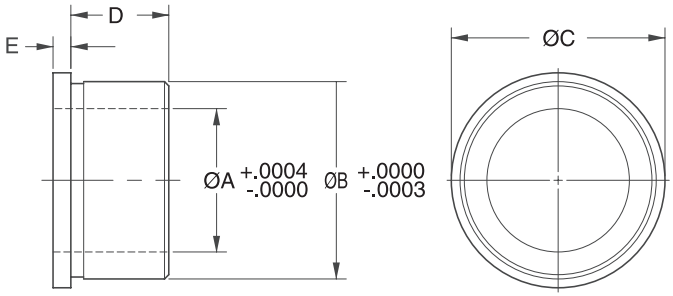

Bullet Nose Pins Liners (Bushings)

Part Number	A	B	C	D	E
40911	.2501	.4078	9/16	7/16	1/16
40912	.3126	.5017	5/8	7/16	1/16
40913	.3751	.6267	3/4	7/16	1/16
40914	.5001	.7518	7/8	1/2	1/16
40915	.7502	1.0018	1 1/8	1/2	1/8
40916	1.0002	1.3771	1 1/2	1 11/16	1/8

Inspection Balls

Premium Short Shank

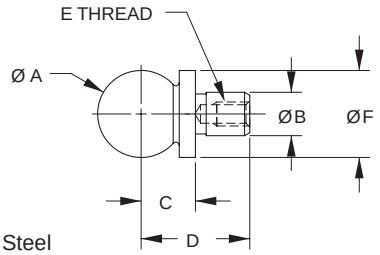

- Material: 8620 Steel
- Case Hardened
- Used as reference points for inspection applications in conjunction with Coordinate Measuring Machines to accurately measure the workpiece.
- Concentricity of Ball to Shank - 0.0001 T.I.R.
- One-piece construction

Part Number	+0.0000 -0.0002 A	+0.0000 -0.0002 B	±0.0002 C	D	Thread E	Dia. F	Weight (lbs) 10 Pcs.
29060	0.2500	0.1247	0.2000	0.58		1/4	.1
29061	0.3750	0.1872	0.3000	0.75		3/8	.1
29062	0.3750	0.3125	0.3000	0.74	8-32	1/2	.3
29063	0.5000	0.2497	0.3125	0.63	6-32	1/2	.3
29064	0.5000	0.2497	0.4000	0.93	6-32	1/2	.3
29065	0.5000	0.2497	0.5000	0.88	6-32	1/2	.3
29066	0.5000	0.3750	0.3750	1.31	10-24	5/8	.6
29067	0.6250	0.3122	0.4500	1.08	8-32	5/8	.6
29068	0.6250	0.3750	0.4500	1.42	10-24	5/8	.7
29069	0.6875	0.3750	0.5000	1.47	10-24	3/4	.9
29070	0.7500	0.3750	0.5625	1.53	10-24	3/4	1.3
29071	1.0000	0.5000	0.7000	1.64	10-24	1	2.5

Precision Slip Fit

- Used as reference points for inspection applications in conjunction with Coordinate Measuring Machines to accurately measure the workpiece.
- Concentricity of Ball to Shank - 0.0002 T.I.R.
- Hardened and ground steel (440 Stainless)
- Two-piece construction

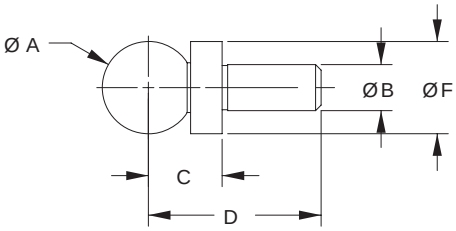

Part Number	±0.0005 A	+0.0000 -0.0002 B	±0.0002 C	D	Dia F	Weight (lbs) 10 Pcs.
29075	0.2500	0.1247	0.2000	9/16	1/4	.1
29076	0.3750	0.1872	0.3000	3/4	3/8	.1
29077	0.5000	0.2497	0.4000	15/16	1/2	.3
29078	0.6250	0.3122	0.4500	1 1/16	5/8	.6
29079	0.7500	0.3747	0.5000	1 1/4	3/4	1.0
29080	0.8750	0.4372	0.6000	1 7/16	3/4	.7
29081	1.0000	0.4997	0.7000	1 5/8	1	2.4

One Piece with Shoulder

- One Piece Construction
- Close Tolerances – 0.0002 T.I.R.
- 8620 Steel Hardened Rc58-62

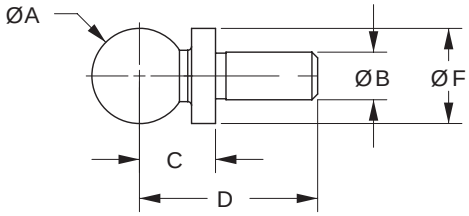

Slip Fit

Part Number	±0.0002 A	+0.0000 -0.0004 B	±0.0002 C	D	Dia F	Weight (lbs) 10 Pcs.
29041	.2500	.1250	.2000	9/16	1/4	.1
29042	.3750	.1875	.3000	3/4	3/8	.1
29043	.5000	.2500	.4000	15/16	1/2	.3
29044	.5000	.2500	.5000	1 3/8	1/2	.4
29045	.7500	.3750	.5000	1 1/4	3/4	1.0

Press Fit

Part Number	±0.0002 Dia A	+0.0003 -0.0000 B	±0.0002 C	D	Dia F	Wt. (lbs) 10 Pcs.
29085	0.2500	.1253	.2000	9/16	1/4	.1
29086	0.3750	.1878	.3000	3/4	3/8	.1
29087	0.5000	.2503	.4000	15/16	1/2	.3
29088	0.5000	.2503	.5000	1 3/8	1/2	.4
29089	0.7500	.3753	.5000	1 1/4	3/4	1.0

Jergens
WORKHOLDING SOLUTIONS GROUP

Construction Balls-Tapped, One-Piece Construction

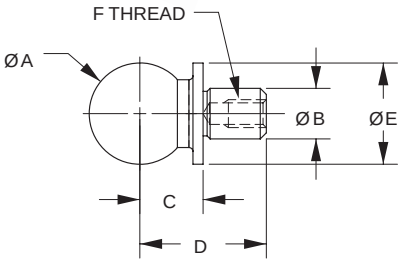

- Heavy-Duty, Resists Lateral Forces
- Close Tolerances – 0.0002 T.I.R.
- 8620 Steel Hardened Rc58-62

Inch

Part Number	±0.0002 A	+0.0000 -0.0004 B	±0.0002 C	D	Dia. E	F	Weight (lbs) 10 Pcs
29051	0.5000	0.2500	.3125	5/8	.490	6-32 x 1/4	.3
29052	0.5000	0.2500	.3125	5/8	.490	Not Tapped	.3

Metric

Part Number	±0.005mm A	+0.000 -0.010mm B	±0.005mm C	D	Dia. E	F	Weight (kgs) 10 Pcs
29090	6mm	3mm	6mm	16mm	6mm	Not Tapped	.05
29091	10mm	5mm	10mm	20mm	10mm	Not Tapped	.15
29092	12mm	6mm	12mm	22mm	12mm	Not Tapped	.15

Tooling Balls - Standard Tolerance, One-Piece Construction

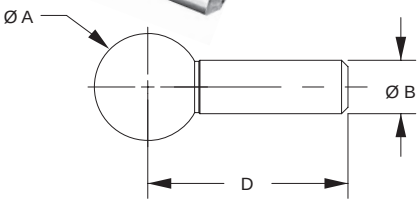

- One Piece Construction
- Close Tolerances – 0.0002 T.I.R.
- 8620 Steel Hardened Rc58-62

Part Number	±0.0002 A	+0.0000 -0.0004 B	D	Weight (lbs) 10 Pcs
29031	.2500	.1250	9/16	.1
29032	.3750	.1875	3/4	.1
29033	.5000	.2500	15/16	.3
29034	.5000	.2500	1 1/2	.3
29035	.5000	.3750	1 1/2	.8

Tooling/Inspection Ball Covers

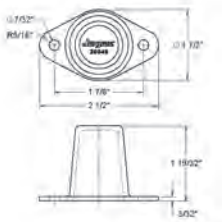

- Mounts directly to the fixture with two number 10 (M4) screws.
- Fits most tooling balls up to 3/4".

Part Number	Mounting Hole-Center to Center ±0.005	Mounting Hole Diameter	Overall Height
29049	1.875	7/32	1.590

Carbide

Part Number
29099

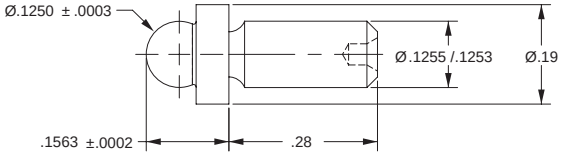

- Two-piece construction
- Used as reference points for inspection applications in conjunction with Coordinate Measuring Machines to accurately measure the workpiece.
- Concentricity of Ball to Shank - 0.0002 T.I.R.
- Hardened and ground
- Material: Ball - Carbide
  Shank - 440 Stainless
- Weight per 10 pcs. 0.1 lbs.

Tooling Balls

Fixture Balls (plain shank)

These Tooling balls are assembled by a welding technique that retains the initial high precision and fine finish of the balls.

- Material: Type 440-C Stainless Steel hardened to Rc 58-62
- Eccentricity, ball to shank, 0.0002 T.I.R. maximum
- Two Piece Welded Construction

NOTE: The weld between the ball and the shank is made so that the ball will drop off if subjected to unusually heavy lateral forces. This prevents setup and inspection errors that might occur because of accidental bending of the shank.

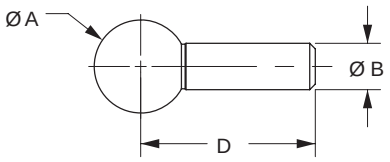

Part Number	A ±0.0001	B +0.0000 -0.0003	C ±0.005
29001	0.2500	0.1247	0.560
29002	0.3750	0.1872	0.750
29003	0.5000	0.2497	0.940
29004	0.6250	0.3122	1.060
29005	0.7500	0.3747	1.250
29006	0.8750	0.4372	1.440
29007	1.0000	0.4997	1.620

*Metric available if requested

Checking Balls (with reference shoulders)

High precision stainless steel checking balls are made to closer tolerances and avoid excessive side forces. The accurately located shoulder provides for positive positioning, re-positioning, or replacement.

- Material: Type 440-C Stainless Steel hardened to Rc 58-62
- Eccentricity, ball to shank, 0.0002 T.I.R. maximum
- Two Piece Welded Construction

A DIM
1/8 thru 5/8 ±.00002
3/4 thru 1" ±.00005

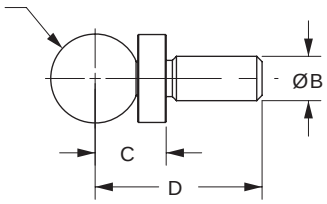

Part Number	A	B +0.0000 -0.0002	C ±0.0002	D -0.005
***29010**	0.1250	0.1255	0.0938	0.375
29011	0.2500	0.1247	0.2000	0.560
29012	0.3750	0.1872	0.3000	0.750
29013	0.5000	0.2497	0.4000	0.940
29014	0.6250	0.3122	0.4500	1.060
29015	0.7500	0.3747	0.5000	1.250
29016	0.8750	0.4372	0.6000	1.440
29017	1.0000	0.4997	0.7000	1.620

*29010 is supplied with tungsten carbide ball only, with Rockwell hardness 91.5 - 92.5
**Metric available if requested

Checking Balls (with reference shoulder and tapped shank)

This Checking Ball can be pulled into a hole or bushing from below without applying pressure on the ball (accomplished by using a cap screw in the tapped hole in the shank).

- Material: Type 440-C Stainless Steel hardened to Rc 58-62
- Eccentricity, ball to shank, 0.0002 TIR max.
- Two Piece Welded Construction

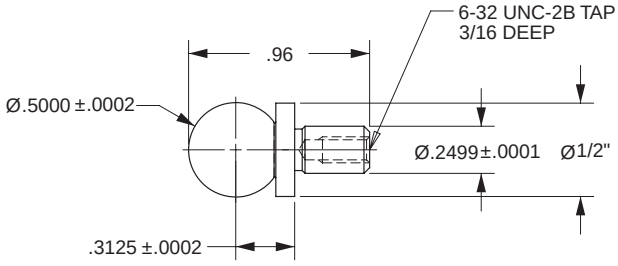

Part Number
29021

Jergens Workolding Solutions Group... Your Uptime Consultants

To compete in today's global industry you need to accommodate shorter lead times, smaller batch sizes and frequent set up changes.

Get more savings by changing what's UNDER the spindle, not ON it.

Shave 90% from your set up times by implementing a quick change fixturing system for a fraction of the cost of your cutting tool investment. Jergens' workholding efficiency improvement process helps:

- **Increase spindle uptime**
- **Speed implementation of lean manufacturing**
- **Improve productivity**
- **Optimize workholding**
- **Reduce downtime**
- **Maximize cost savings**
- **Eliminate setup errors and inefficiencies**
- **Faster part-to-part changeover**

Jergens®
SAVINGS
UNDER THE SPINDLE

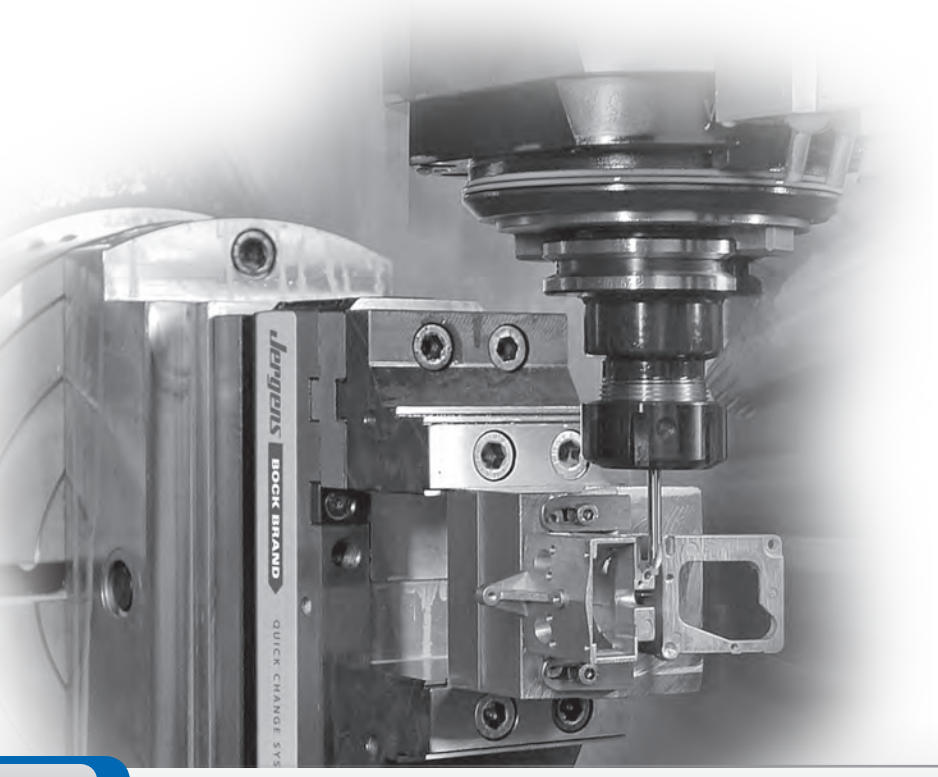

"The applications of the Ball Lock® System are basically limitless – you're completely free from the design limitations of common tooling. We have increased utilization rates 75% – 90%."

Jergens Ball Lock® Customer

Workholding Components

Adjustable Clamp Heels....274
Adjustable Clamp Rests....273
Adjustable Step Blocks....284
Assemblies, Spherical Flange....260
Bolts, Dovetail....258
Bolts, Swing....241
Bolts, T....258
Bolts, T-Slot....257
Bolts, T-Strap....253
Clamp Assemblies, Double Cam....234
Clamp Assemblies, Flange Nut....233
Clamp Assembly, Heel Pad....232
Clamp Assemblies, Hook....239
Clamp Assemblies, Knob....235
Clamp Assemblies, Miniature Flat....232
Clamp Assemblies, Miniature Radius....232
Clamp Assemblies, Radius End Flange Nut....233
Clamp Assemblies, Radius Swing....233
Clamp Assemblies....232–235, 238–239
Clamp Rests....236
Clamping Kits....286
Clevis Pins....252
Collars, Steel Shaft....253
Double Cams....237
Finger Handles....236
Forged Adjustable Clamp....282
Forged Straps, U Clamp....281
Forged Straps, Finger Clamp....281
Forged Straps, Gooseneck Clamp....280
Forged Straps, Heel Clamp....280
Guide Blocks....236
Replaceable Grippers....270–271
  Tapered Hardened Steel....270–271
  Tapered Carbide Steel....270
I.D. Expansion Clamp....291
Leveling Mounts....250
Leveling Pads....248–249
Micro Clamps, Adjustable....290
Micro Clamps, Edge....296
Micro Clamps, Expanding....293
Micro Clamp, Knife Edge....292
Micro Clamp, Low Profile....289
Micro Clamps, Machinable Expanding....294
Micro Clamps....292
Micro Clamps, T-Slot....295
Micro Clamps, Toe....295
Modular Mini Vise....297
Nuts, Acorn....263
Nuts, Check....262
Nuts, Coupling....262
Nuts, Equalizing Hex Head....260
Nuts, Flange....259
Nuts, Heavy Duty Hex....260
Nuts, Knurled Equalizing....263
Nuts, Knurled Lock....262
Nuts, Spherical Flange....261
Nuts, Spinner-Grip™....261
Nuts, Stainless Steel....263
Nuts, T-Slot....264
Plastic Pad Covers....246
Revolving Clamp Assemblies, Long Bushing Type....238
Revolving Clamp Assemblies, Short Bushing Type....238
Revolving Clamp Base....238
Rod Ends....242
Screw, Half Turn....243
Screws, Hand Knob....236
Screws, Quarter Turn....243
Screws, Socket Shoulder....240–241
Screws, Thumb....244
Set-Up Kits, Die....286
Set-Up Kits....285–286
Single Cams....237
Step Blocks....284
Strap Pads....237
Straps, Heel....283
Straps, Miniature Flat....273
Straps, Miniature Radius....272
Straps, Padded....275
Straps, Plain....274
Straps, Radius....277
Straps, Slotted Radius....277
Straps, Taper Nose....279
Straps, Tapped....278
Studs, Alloy Steel....254–255
Studs, Fixture....256
Studs, Set-Up....256
Studs....254–256
Tee Strap Bolts....253
Toe Clamp, Kits....287–288
Toe Clamps, Large....288
Toe Clamps, Small....287
Toggle Pads....247
Toggle Screws, Adjustable Torque....245
Toggle Screws, Hand Knob....245
Toggle Screws, Socket Toggle....246
Toggle Screws, Thumb....246
U-Straps, Long Slot....276
Washers, "C"....266
Washers, Equalizing "C"....266
Washers, Equalizing Swing "C" Assembly....267
Washers, Equalizing Swing "C"....266
Washers, Flat....265
Washers, Heavy Duty Flat....265
Washers, Heavy Duty Square....267
Washers, Self Aligning....268
Washer, USAE....269
Yokes....251–252

Jergens®
MANUFACTURING EFFICIENCY

Clamp Assemblies

Miniature Flat

Fast-acting clamp for light-duty holding. Includes strap, knurled thumb screw, spherical washer, stud, plain flat washer, three hex jam nuts and spring. Features free swinging adjustments for positioning the assembly without interference.

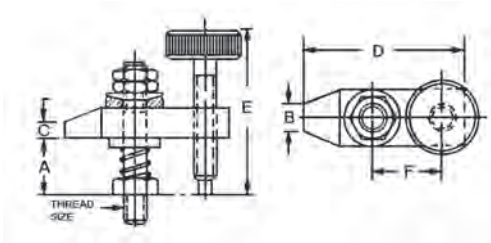

Part Number	A	B	C	D	E	F	Thread Size	Wt. (lbs)
12901	5/8	1/4	1/8	1 1/2	1 9/16	11/16	10-24	.19
12902	5/8	1/4	1/8	2	1 9/16	15/16	1/4-20	.22
12903	9/16	1/4	1/8	2 1/2	1 9/16	1 3/16	1/4-20	.25

Miniature Radius

A light-duty clamp assembly for clamping close to the edge. Complete with radius strap, double jam nuts with spherical washers, finger tip, quick-action knurled thumb screw heel rest, stud, spring and washer. The latter allows free swinging and lateral adjustments for easier set-ups.

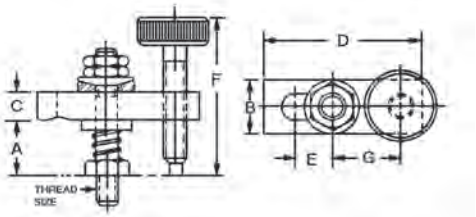

Part Number	A	B	C	D	E	F	G	Thread Size	Wt. (lbs)
13101	1/2	1/2	1/4	1 1/2	7/16	1 9/16	9/16	10-24	.20
13102	1/2	1/2	1/4	1 3/4	9/16	1 9/16	11/16	10-24	.22
13103	1/2	1/2	1/4	2	11/16	1 9/16	13/16	10-24	.24

Heel Pad

In one movement this clamp assembly can be moved into place and tightened; recommended where hand pressure clamping is suitable for the application.

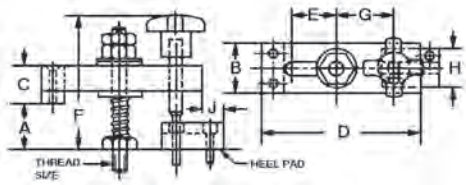

Part Number	A	B	C	D	E	F	G	H	Heel Pad	J	Thread Size	Wt. (lbs)
13301	5/8	5/8	1/2	2	5/8	1 15/16	25/32	3/4	13701	1/2	1/4-20	.38
13312	9/16	7/8	11/16	2 1/2	3/4	2 9/16	15/16	1	13703	5/8	5/16-18	.69
13306	13/16	1 1/4	7/8	3 1/2	1	2 7/8	1 7/16	1	13703	1/2	3/8-16	1.38
13308	13/16	1 1/4	7/8	4 1/2	1 5/8	2 7/8	1 13/16	1	13703	1/2	3/8-16	1.68
13313	1 1/4	1 1/2	1	4 1/2	1 1/4	3 7/8	1 15/16	1 1/2	13705	1 1/8	1/2-13	2.20

Clamp Assemblies

Flange Nut

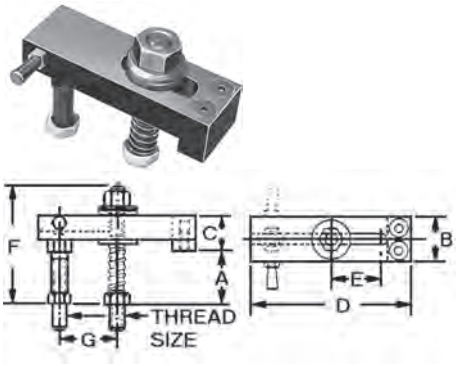

Use where great clamping pressures are needed and vibration is a problem.

Heavy-duty clamping with spherical flange nut and spherical washer for greater flexibility. Extra long, true milled slot allows more clearance for placing and removing work. Brass and plastic pads are available, see page 237.

Part Number	A	B	C	D	E	F	G*	Thread Size	Wt. (lbs)
12701†	3/4	5/8	1/2	2	5/8	1 5/8	7/8	1/4-20	.27
12703	1 1/2	1 1/4	7/8	3 1/2	1 1/8	2 15/16	1 7/16	3/8-16	1.12
12705	1 1/2	1 1/4	7/8	4 1/2	1 5/8	2 15/16	1 15/16	3/8-16	1.38
12707	1 1/8	1 1/2	1 1/8	4 1/2	1 1/4	3	2 1/8	1/2-13	2.12
12710	1 1/8	1 1/2	1 1/8	6	2	3	2 7/8	1/2-13	2.62
12711	2 5/8	1 3/4	1 3/8	5	1 1/2	5 1/16	2 1/8	5/8-11	3.50
12713	2 5/8	1 3/4	1 3/8	7	2 1/2	5 1/16	3 1/8	5/8-11	4.12
12714	1 3/4	1 3/4	1 1/2	5	1 1/2	4 3/8	2 1/8	3/4-10	4.12
12716	1 3/4	1 3/4	1 1/2	7	2 1/2	4 3/8	3 1/8	3/4-10	4.87

*G dimension represents an optimum dimension.
† Does not include finger handle. See page 236.

Radius End Flange Nut

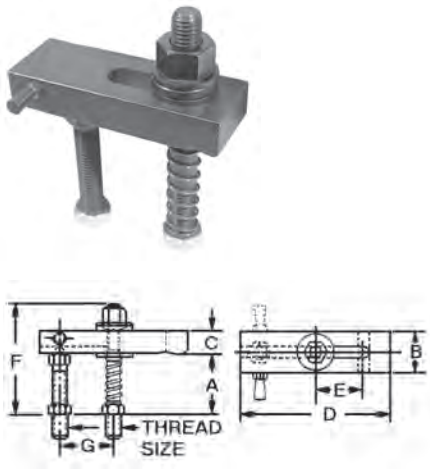

Heavy-duty clamping of plain surfaces with spherical flange nut and spherical washer for angular flexibility. Long, true milled slot allows greater clearance for placing and removing work. Spring-loaded stud for quick release.

Part Number	A	B	C	D	E	F	G*	Thread Size	Wt. (lbs)
14103†	7/8	5/8	3/8	2	5/8	1 5/8	7/8	1/4-20	.25
14104†	7/8	5/8	3/8	2 1/2	1	1 5/8	7/8	1/4-20	.28
14117†	1 1/8	7/8	1/2	2 1/2	3/4	2 1/4	15/16	5/16-18	.75
14118†	1 1/8	7/8	1/2	3 1/2	1 1/4	2 1/4	15/16	5/16-18	.85
14105	1 3/4	1 1/4	5/8	3 1/2	1 1/8	2 15/16	1 7/16	3/8-16	1.10
14119	1 3/4	1 1/4	5/8	4 1/2	1 5/8	2 15/16	1 7/16	3/8-16	1.20
14108	1 1/2	1 1/2	3/4	4 1/2	1 1/4	3	1 7/8	1/2-13	2.00
14110	1 1/2	1 1/2	3/4	6	1 1/2	3	1 7/8	1/2-13	2.44
14111	3 1/8	1 3/4	7/8	5	1 1/2	5 1/16	2	5/8-11	3.25
14113	3 1/8	1 3/4	7/8	7	2 1/2	5 1/16	2	5/8-11	3.88
14114	2 1/4	1 3/4	1	5	1 1/2	4 3/8	2 1/8	3/4-10	3.88
14116	2 1/4	1 3/4	1	7	2 1/2	4 3/8	2 1/8	3/4-10	4.85

*G dimension represents an optimum dimension.
† Does not include finger handle. See page 236.

Radius Swing Clamp

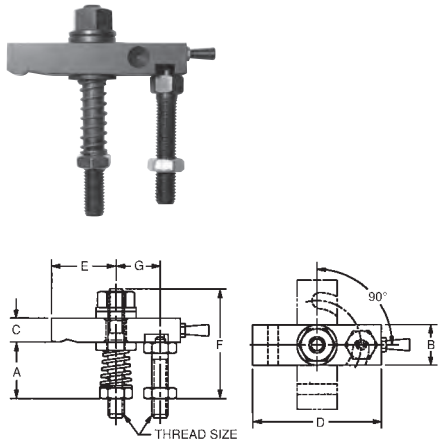

Features fast-action, light-duty holding of plain surface work where quick movements are required in a restricted space. Radial milled slots allows for 90° swing. Ideally suited for placing and removing workpiece.

Part Number	Thread Size	A	B	C	D	E	F	G	Wt. (lbs)
14123*	1/4-20	7/8	5/8	3/8	2	1	1 5/8	11/16	.25
14125	3/8-16	1 3/4	1 1/4	5/8	3 1/2	1 1/2	2 15/16	1 1/4	1.10
14128	1/2-13	1 1/2	1 1/2	3/4	4 1/2	1 13/16	3	1 15/16	2.00
14131	5/8-11	3 1/8	1 3/4	7/8	5	2 1/16	5 1/16	2 3/16	3.25
14134	3/4-10	2 1/4	1 3/4	1	5	2 1/16	4 3/8	2 3/16	3.88

*Does not include finger handle. See page 236.

Clamp Assemblies

Double Cam

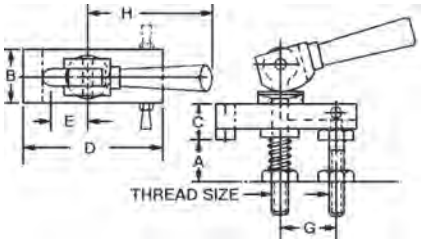

Features fast-action, light-duty holding of plain surface work where quick movements are required in a restricted space. Long end slot for lateral adjustment. Spring-loaded stud member under sturdy double-cam lever. Plastic and brass pads available for protecting workpiece, see page 237.

Part Number	A	B	C	D	E	G*	H	Thread Size	Wt. (lbs)
12501†	5/8	5/8	1/2	2	5/8	7/8	2 1/2	1/4-20	.40
12502	1 5/16	1 1/4	7/8	3 1/2	1 1/8	1 7/16	3 7/16	3/8-16	1.50
12503	1	1 1/2	1 1/8	4 1/2	1 1/4	1 7/8	5	1/2-13	3.00
12504	2 1/8	1 3/4	1 3/8	5	1 1/2	1 15/16	5 1/16	5/8-11	4.70

*G dimension represents an optimum dimension.
† Does not include finger handle. See page 236.

Double Cam Clamp Assemblies W/Radius Nose Strap

Same fast-action as Standard Double Cam Clamp but with a radius strap.

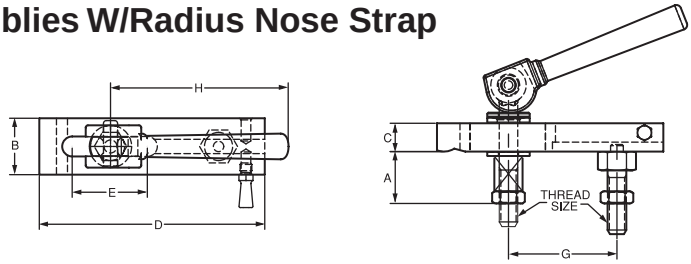

Part Number	A	B	C	D	E	G*	H	Thread Size	Wt. (lbs)
12511†	3/4	5/8	3/8	2	5/8	7/8	2 1/2	1/4-20	0.35
12512†	3/4	5/8	3/8	2 1/2	1	7/8	2 1/2	1/4-20	0.40
12513†	1 1/8	7/8	1/2	2 1/2	3/4	1 1/4	3 7/16	5/16-18	1.25
12514†	1 1/8	7/8	1/2	3 1/2	1 1/4	1 1/4	3 7/16	5/16-18	1.40
12515	1 1/2	1 1/4	5/8	3 1/2	1 1/8	1 7/16	3 7/16	3/8-16	1.50
12516	1 1/2	1 1/4	5/8	4 1/2	1 5/8	1 7/16	3 7/16	3/8-16	1.80
12517	1 3/8	1 1/2	3/4	4 1/2	1 1/4	1 7/8	5	1/2-13	3.00
12518	1 3/8	1 1/2	3/4	6	2	1 7/8	5	1/2-13	3.40
12519	1 5/8	1 3/4	7/8	5	1 1/2	1 15/16	5 1/16	5/8-11	4.70

*G dimension represents an optimum dimension.
† Does not include finger handle. See page 236.

Double Cam Clamp Assemblies W/Double End Radius Nose Strap

Double Cam Clamp featuring a radius at both ends of the strap.

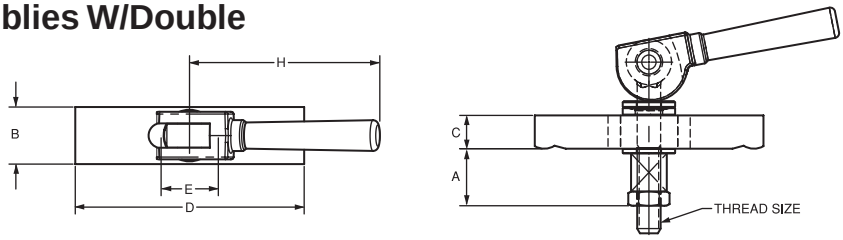

Part Number	A	B	C	D	E	H	Thread Size	Wt. (lbs)
12523	1 3/8	1 1/2	3/4	4	1 1/4	5	1/2-13	2.50
12524	1 3/8	1 1/2	3/4	5	1 1/4	5	1/2-13	3.00
12526	1 5/8	1 5/8	7/8	6	1 1/2	5 1/16	5/8-11	5.30

Clamp Assemblies
Knob

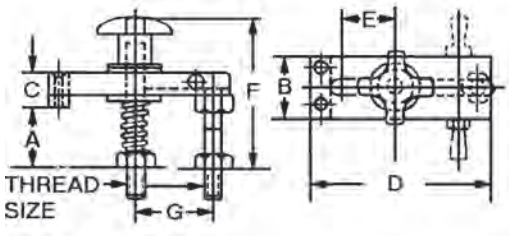

Designed for light-duty clamping, the hand knob eliminates wrenching for faster work changes. Spherical washer allows for clamping irregular surfaces.

- Interchangeable pad option
- Steel pad standard, brass and plastic pads are available, see page 237
- Pads machinable to part configuration

Part Number	A	B	C	D	E	F	G*	Thread Size	Wt. (lbs)
13501†	3/4	5/8	1/2	2	5/8	2 5/16	1	1/4-20	.35
13503	1 1/2	1 1/4	7/8	3 1/2	1 1/8	3 19/32	1 7/16	3/8-16	1.22

*G dimension represents an optimum dimension.
† Does not include finger handle. See page 236.

Knob Clamp Assemblies w/Radius Nose Strap

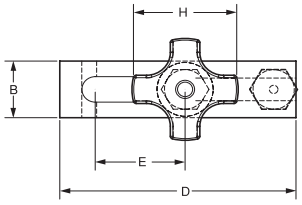

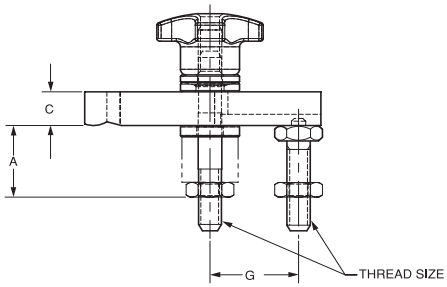

Part Number	A	B	C	D	E	G*	H	Thread Size	Wt. (lbs)
13512†	7/8	5/8	3/8	2 1/2	1	2 1/4	7/8	1/4-20	.32
13515	1 3/4	1 1/4	5/8	3 1/2	1 1/8	3 1/2	1 7/16	3/8-16	1.10
13516	1 3/4	1 1/4	5/8	4 1/2	1 5/8	3 1/2	1 7/16	3/8-16	1.30

*G dimension represents an optimum dimension.
† Does not include finger handle. See page 236.

Clamp Assemblies Components

Finger Handles

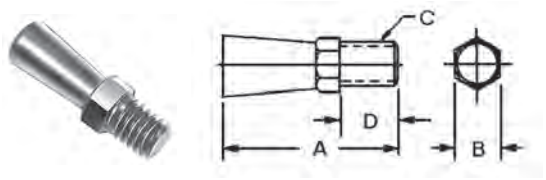

Part Number	A	B	C	D	Wt. (lbs) 10 Pcs.
19501	3/4	1/4	10-32	1/4	.08
19502	1 3/16	3/8	5/16-18	5/16	.31

- Material: Low Carbon Steel
- Finish: Black Oxide

Clamp Rests

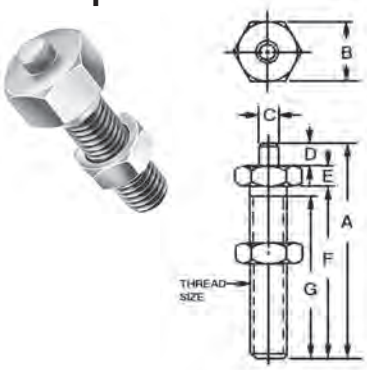

- Material: Low Carbon Steel
- Finish: Black Oxide
- Heat Treat: Case Hardened
- Thread: 2A-UNC

Part Number	A	B	C	D	E	F	G	Thread Size	Wt. (lbs) 10 Pcs.
21301	3/4	3/8	5/32	5/64	11/64	1/2	13/32	10-24	.19
21302	1 1/4	7/16	5/32	5/64	11/64	1	29/32	1/4-20	.22
21307	1 7/8	1/2	7/32	3/16	7/32	1 15/32	1 5/16	5/16-18	.60
21308	3 1/4	1/2	7/32	3/16	7/32	2 27/32	2 11/16	5/16-18	1.25
21303	2 1/2	9/16	11/32	5/32	11/32	2	1 13/16	3/8-16	.70
21313	3 7/8	9/16	11/32	5/32	11/32	3 3/8	3 3/16	3/8-16	2.80
21304	2 3/8	7/8	11/32	3/16	1/2	1 11/16	1 1/2	1/2-13	1.88
21314	3 7/8	7/8	11/32	3/16	1/2	3 3/16	3	1/2-13	3.50
21315	2 5/8	7/8	11/32	3/16	1/2	1 15/16	1 11/16	5/8-11	2.25
21305	3 27/32	7/8	11/32	3/16	1/2	3 5/32	2 15/16	5/8-11	3.60
21316	2 3/4	7/8	11/32	3/16	1/2	2 1/16	1 7/8	3/4-10	2.75
21306	3 1/2	7/8	11/32	3/16	1/2	2 13/16	2 3/8	3/4-10	4.70

Clamp Assembly Guide Blocks

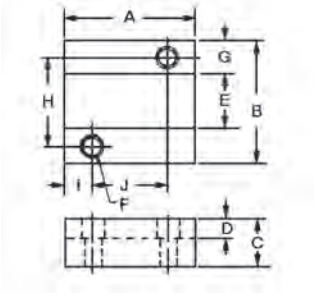

Part Number	A	B	C	D	E	Soc. Hd. Cap F	G	H	I	J	Wt. (lbs) 10 Pcs.
13701	7/8	3/4	5/16	1/8	7/32	5-40	1/8	1/2	3/16	1/2	.06
13703	1 1/8	1	1/2	3/16	9/32	8-32	3/16	5/8	1/4	5/8	.12
13705	1 5/8	1 1/2	5/8	1/4	13/32	1/4-20	1/4	1	3/8	7/8	.38

- Material: Low Carbon Steel
- Finish: Black Oxide
- Heat Treat: Case Hardened 74-77 R30N
- Mounting Screws Supplied with Heel.

Hand Knob Screws

- Material: Stem, Stressproof®
  Head, Cast Iron
- Finish: Stem, Black Oxide
  Head, Zinc Plate
- Thread: 2A-UNC

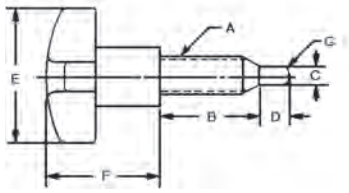

Part Number	A	B	C	D	E	F	Radius G	Wt. (lbs) 10 Pcs.
13901	1/4-20	3/4	11/64	1/4	1 1/8	7/8	1/8	.78
13902	5/16-18	1 1/16	7/32	5/16	1 1/2	1	1/4	1.57
13903	3/8-16	1 3/16	1/4	5/16	2	1 1/8	1/4	1.87
13904	1/2-13	1 5/8	3/8	3/8	2 1/2	1 1/2	3/8	4.00
13905	5/8-11	1 3/4	15/32	3/8	3	2	3/8	12.50

Designed for applications where thumb screws are too light, and a heavier, larger unit is needed. Cast iron knob, dog point end.

Strap Pads-Steel, Plastic & Brass

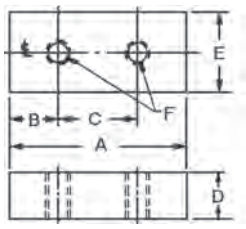

- Material: Steel, Low Carbon Steel
  Plastic, Paper Filled Bakelite
  Brass
- Finish: Steel Pad Only, Black Oxide
- Heat Treat: Steel Pad Only,
  Case Hardened 74-77 R30N

Plastic Pads
Resistant to oil and cutting fluids, allows high clamping pressures, yet protects the soft materials from being scratched or marred.

Steel Pads		Plastic Pads		Brass Pads							
Part Number	Wt. (lbs) 10 Pcs.	Part Number	Wt. (lbs) 10 Pcs.	Part Number	Wt. (lbs) 10 Pcs.	A	B	C	D	E	F
17101	.05	**17102**	.02	**17103**	.06	5/8	9/64	11/32	1/8	1/4	5-40
17104	.16	**17105**	.03	**17106**	.18	7/8	3/16	1/2	3/16	3/8	8-32
17107	.40	**17108**	.08	**17109**	.43	1 1/4	5/16	5/8	1/4	1/2	10-24
17110	.90	**17111**	.16	**17112**	.93	1 1/2	3/8	3/4	3/8	5/8	1/4-20
17113	1.50	—	—	—	—	1 3/4	1/2	3/4	1/2	3/4	1/4-20

Double Cams

Slip standard pipe over handle for more leverage. Snug fit at handle collar and end.

- Finish: Black Oxide
- Material: C1020
- Heat Treat: Case Hardened 74-77 R30N

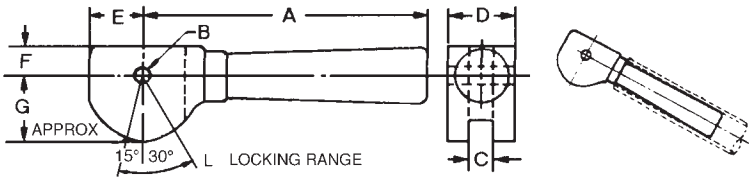

Forged, heat-treated for abrasion-resistance and longer life. Designed for quick change clamping which requires greater holding pressures than are available with single cams. Mean clamping point pressure angle is from 3 1/2° to 4°, which makes for stronger workholding.

Part Number	A	B	C	D	E	F	G	L	Wt. (lbs)
18101	2 1/2	3/16	17/64	5/8	3/8	1/4	.437	.015	.14
18102	3 7/16	5/16	25/64	7/8	19/32	23/64	.679	.019	.34
18103	5	3/8	33/64	1 1/8	5/8	15/32	.755	.031	.83
18104	5 1/16	5/8	41/64	1 1/4	7/8	5/8	1.040	.043	1.00

Single Cams

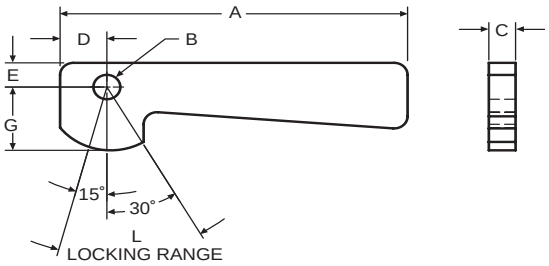

- Finish: Black Oxide
- Material: 1018
- Heat Treat: Case Hardened Rc 58-62

Part Number	A	B	C	D	E	G	L	Wt. (lbs)
12101	2 3/8	5/32	3/16	3/8	3/16	17/32	.015	0.62
12102	3 1/4	1/4	1/4	7/16	1/4	21/32	.022	1.40
12103	4 1/2	5/16	3/8	3/4	3/8	29/32	.031	4.00
12104	5	3/8	1/2	7/8	7/16	1 5/64	.031	6.90

Revolving Clamp Assemblies

Quick hold-down of workpiece with hand tightening, then loosen and revolve out of the way. Saves time for moderate-duty clamping.

Malleable cast iron body. Case-hardened swivel pad uses “tru-center” feature to maintain even, in-line pressure on work-piece.

Long Bushing Type

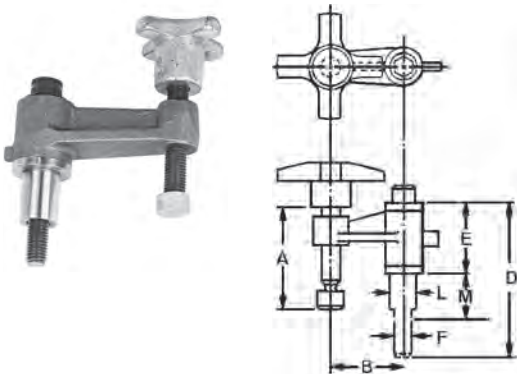

- Body Material: Malleable ASTM A47, GR32510
- Finish: Black Oxide
- Bushings: Hardened & Ground Rc 56-60

Part Number	A	B	D	E	F	L	M	Wt. (lbs)
35119	2	1 1/2	3	1 1/2	5/16-18	.5610/ .5595	5/8	0.8
35103	2	1 1/2	3 1/4	1 1/2	3/8-16	.6235/ .6220	3/4	0.8
35116	3 3/8	3	5	2 1/4	1/2-13	.8735/ .8720	1 1/4	4.5
35106	3 3/4	3	5	2 1/4	5/8-11	1.1235/ 1.1220	1 1/2	4.8
35109	3 3/4	4	5	2 1/4	5/8-11	1.1235/ 1.1220	1 1/2	5.0

Short Bushing Type

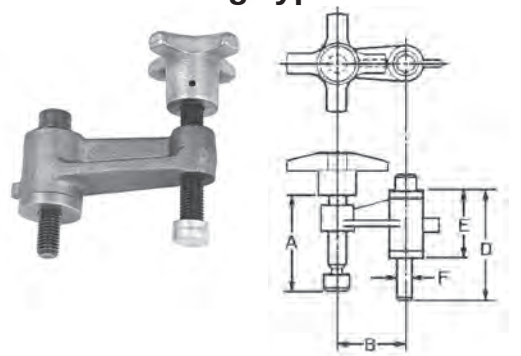

- Body Material: Malleable ASTM A47, GR32510
- Finish: Black Oxide
- Bushings: Hardened & Ground Rc 56-60

Part Number								
Clamp Only	Clamp w/ Base	A	B	D	E	F	Wt. (lbs)	Base Part Number
35117	**35118**	2	1 1/2	2	1 1/2	5/16-18	0.7	**35113**
35101	**35102**	2	1 1/2	3 1/4	1 1/2	3/8-16	0.7	**35110**
35114	**35115**	3 3/8	3	5	2 1/4	1/2-13	4.3	**35112**
35104	**35105**	3 3/4	3	3	2 1/4	5/8-11	4.5	**35111**
35107	**35108**	3 3/4	4	5	2 1/4	5/8-11	4.8	**35111**

Revolving Clamp Base

(for use with Short Bushing Type only)

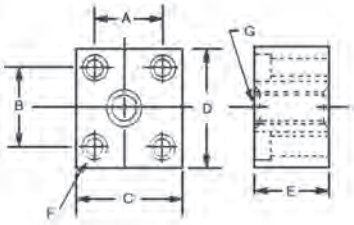

- Stop pin supplied with each base.

Part Number	A	B	C	D	E	F	Mtg. Bold Size G	Wt (lbs)
35113	3/4	1	1 7/16	1 1/2	1	#10	5/16-18	0.5
35110	7/8	1	1 7/16	1 1/2	1	#10	3/8-16	0.6
35112	1 1/8	1 3/8	2 1/4	2 1/4	1 1/4	1/4	1/2-13	1.2
35111	1 1/4	1 1/2	2 1/4	2 1/4	1 1/4	3/8	5/8-11	1.7

Hook Clamp Assemblies 829

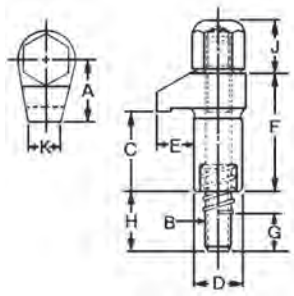

Moderate to heavy-duty holding power in close quarters. When released, the hook clamp swings quickly and easily out of the way for fast maneuvering of work. Spring-loaded shank for speedy clamp release.

- Material: Cast Steel Body, 4140
- Finish: Black Oxide
- Heat Treat: Rc 42-46
- Stud: Furnished

Part Number	A	Stud Size B	C	D	E	F	G	H	J	K	Wt. (lbs)	Max. Torque (Ft/lbs)
41901*	11/16	5/16-18 x 2 1/2	7/8	.624/.625	3/8	1 3/8	5/16	3/4	5/8	3/8	.21	25
41908	1	3/8-16 x 4	1 5/8	.874/.875	9/16	2 1/4	3/4	1 1/4	3/4	5/8	.59	40
41902*	1	1/2-13 x 4	1 5/8	.874/.875	9/16	2 1/4	5/8	1 1/8	15/16	5/8	.64	100
41903	1 7/16	5/8-11 x 5	1 13/16	1.124/1.125	7/8	2 3/4	7/8	1 3/8	1 3/16	3/4	1.38	180

*Conforms to TCMA

Hook Clamp Assemblies 829

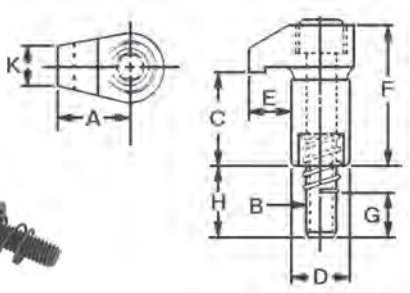

Alternative to the above assembly, features flush-mounted socket screw instead of acorn nut. Designed for limited space applications and moderate holding power.

- Material: Cast Steel Body, 4140
- Finish: Black Oxide
- Heat Treat: Rc 42-46
- Screw: Furnished

Part Number	A	Cap Screw B	C	D	E	F	G	H	K	Wt. (lbs)	Max. Torque (Ft/lbs)
41904*	11/16	5/16-18 x 1 3/4	7/8	.624/.625	3/8	1 3/8	1/4	5/8	3/8	.14	25
41905*	1	3/8-16 x 3	1 5/8	.874/.875	9/16	2 1/4	5/8	1 1/16	5/8	.44	40
41907	1	1/2-13 x 3	1 5/8	.874/.875	9/16	2 1/4	5/8	1 1/8	5/8	.47	100
41906	1 7/16	5/8-11 x 3 1/2	1 13/16	1.124/1.125	7/8	2 3/4	13/16	1 9/16	3/4	1.00	180

*Conforms to TCMA

Socket Shoulder Screws
Nylon Locking

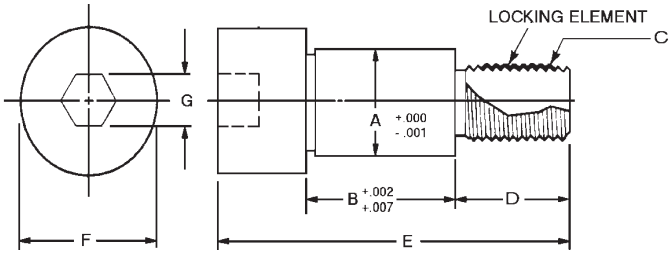

Socket Shoulder Screws are held to much closer tolerances than on standard Stripper Bolts. **The "B" dimension is always a plus to eliminate the binding on movable plates. The "A" dimension is held closer for bearing-type locating**. You'll get more positive holding power and greater turning leverage. Ideal for all sliding mechanisms. Nylon locking element is incorporated in all Jergens Shoulder Screws.

- Material: 4140
- Heat Treat: Rc 38-42
- Thread: 2A-UNC

Diameter A	B	Part Number	Thread Size C	D	E	F	Hex Size G	Wt. (lbs) 10 Pcs.
.249	1/4	**41701***	10-24	3/8	13/16	3/8	1/8	.09
.249	3/8	**41702***	10-24	3/8	15/16	3/8	1/8	.12
.249	1/2	**41703***	10-24	3/8	1 1/16	3/8	1/8	.13
.249	5/8	**41704***	10-24	3/8	1 3/16	3/8	1/8	.15
.249	3/4	**41705***	10-24	3/8	1 5/16	3/8	1/8	.16
.249	7/8	**41706***	10-24	3/8	1 7/16	3/8	1/8	.19
.374	1/4	**41707***	5/16-18	1/2	1	9/16	3/16	.30
.374	3/8	**41708***	5/16-18	1/2	1 1/8	9/16	3/16	.32
.374	1/2	**41709***	5/16-18	1/2	1 1/4	9/16	3/16	.38
.374	5/8	**41710***	5/16-18	1/2	1 3/8	9/16	3/16	.41
.374	3/4	**41711***	5/16-18	1/2	1 1/2	9/16	3/16	.45
.374	7/8	**41712***	5/16-18	1/2	1 5/8	9/16	3/16	.48
.499	3/8	**41713***	3/8-16	5/8	1 5/16	3/4	1/4	.68
.499	1/2	**41714***	3/8-16	5/8	1 7/16	3/4	1/4	.73
.499	5/8	**41715***	3/8-16	5/8	1 9/16	3/4	1/4	.78
.499	3/4	**41716***	3/8-16	5/8	1 11/16	3/4	1/4	.86
.499	7/8	**41717***	3/8-16	5/8	1 13/16	3/4	1/4	.93
.624	1/2	**41718***	1/2-13	3/4	1 5/8	7/8	5/16	1.22
.624	5/8	**41719***	1/2-13	3/4	1 3/4	7/8	5/16	1.36
.624	3/4	**41720***	1/2-13	3/4	1 7/8	7/8	5/16	1.41
.624	7/8	**41721***	1/2-13	3/4	2	7/8	5/16	1.56
.624	1	**41722***	1/2-13	3/4	2 1/8	7/8	5/16	1.85
.749	5/8	**41723***	5/8-11	7/8	2	1	3/8	2.25
.749	3/4	**41724***	5/8-11	7/8	2 1/8	1	3/8	2.47
.749	7/8	**41725***	5/8-11	7/8	2 1/4	1	3/8	2.60
.749	1	**41726***	5/8-11	7/8	2 3/8	1	3/8	2.75
.749	1 1/4	**41727***	5/8-11	7/8	2 5/8	1	3/8	2.90
.999	1	**41728**	3/4-10	1	2 5/8	1 3/8	1/2	5.47
.999	1 1/2	**41729**	3/4-10	1	3 1/8	1 3/8	1/2	6.56
.999	2	**41730**	3/4-10	1	3 5/8	1 3/8	1/2	7.66

*Conforms to TCMA

Socket Head Shoulder Screws
Stainless Steel

• Material: 303 Stainless

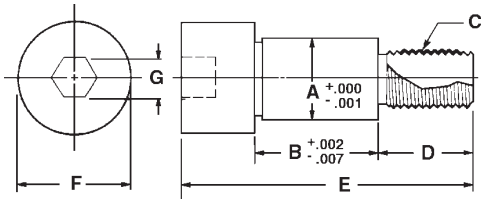

Socket Shoulder Screws are held to much closer tolerances than on standard Stripper Bolts. **The "B" dimension is always a plus to eliminate the binding on movable plates. The "A" dimension is held closer for bearing-type locating**. You'll get more positive holding power and greater turning leverage. Ideal for all sliding mechanisms. Nylon locking element is incorporated in all Jergens Shoulder Screws.

Part Number	Diam. A	B	C	D	E	F	Hex Size G	Wt. (lbs) 10 Pcs.
41801	1/4	1/4	10-24	3/8	13/16	3/8	1/8	.09
41802	1/4	3/8	10-24	3/8	15/16	3/8	1/8	.12
41803	1/4	1/2	10-24	3/8	1 1/16	3/8	1/8	.13
41804	1/4	5/8	10-24	3/8	1 3/16	3/8	1/8	.15
41805	1/4	3/4	10-24	3/8	1 5/16	3/8	1/8	.16
41806	1/4	1	10-24	3/8	1 9/16	3/8	1/8	.19
41807	3/8	1/4	5/16-18	1/2	1	9/16	3/16	.30
41808	3/8	3/8	5/16-18	1/2	1 1/8	9/16	3/16	.32
41809	3/8	1/2	5/16-18	1/2	1 1/4	9/16	3/16	.38
41810	3/8	5/8	5/16-18	1/2	1 3/8	9/16	3/16	.41
41811	3/8	3/4	5/16-18	1/2	1 1/2	9/16	3/16	.45
41812	3/8	1	5/16-18	1/2	1 3/4	9/16	3/16	.48
41813	1/2	3/8	3/8-16	5/8	1 5/16	3/4	1/4	.68
41814	1/2	1/2	3/8-16	5/8	1 7/16	3/4	1/4	.73
41815	1/2	5/8	3/8-16	5/8	1 9/16	3/4	1/4	.78
41816	1/2	3/4	3/8-16	5/8	1 11/16	3/4	1/4	.86
41817	1/2	1	3/8-16	5/8	1 15/16	3/4	1/4	.93
41818	5/8	1/2	1/2-13	3/4	1 5/8	7/8	5/16	1.22
41819	5/8	5/8	1/2-13	3/4	1 3/4	7/8	5/16	1.36
41820	5/8	3/4	1/2-13	3/4	1 7/8	7/8	5/16	1.41
41822	5/8	1	1/2-13	3/4	2 1/8	7/8	5/16	1.85

Swing Bolts (Latch Bolt)

• Material: 4140
• Finish: Black Oxide
• Heat Treat: Rc 36-40
• Thread: Class 2A-UNC

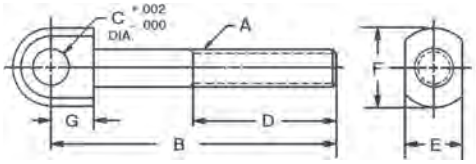

Part Number	Thread Size A	B	C	D	E	F	G	Wt. (lbs) 10 Pcs.
29501*	3/8-16	2 1/2	3/8	1 3/8	1/2	3/4	3/8	.93
29502	3/8-16	3 1/4	3/8	1 3/4	1/2	3/4	3/8	1.25
29513	1/2-13	2 5/8	3/8	1 1/2	5/8	1	7/16	1.95
29504*	1/2-13	3 1/8	1/2	1 3/4	5/8	1	7/16	2.04
29505	1/2-13	4 1/8	1/2	2 1/4	5/8	1	7/16	2.64
29516	5/8-11	3 3/4	1/2	2	3/4	1 1/8	1/2	3.64
29507	5/8-11	3 1/2	5/8	1 3/4	3/4	1 1/8	1/2	3.67
29508	5/8-11	4 3/4	5/8	2 1/2	3/4	1 1/8	1/2	4.75
29509	3/4-10	4 3/8	3/4	2 1/2	7/8	1 3/8	11/16	6.10
29510	3/4-10	6 1/2	3/4	3 1/4	7/8	1 3/8	11/16	8.85

*Conforms to TCMA.

Not to be used for lifting.

Swing Bolts (Latch Bolt)
Stainless Steel

• Material: 303 Stainless
• Thread: Class 2A-UNC

Part Number	Thread Size A	B	C	D	E	F	G	Wt. (lbs) 10 Pcs.
29601	3/8-16	2 1/2	3/8	1 3/8	1/2	3/4	1/2	1.1
29602	3/8-16	3 1/2	3/8	2	1/2	3/4	1/2	1.4
29603	1/2-13	3 1/8	1/2	1 5/8	5/8	1	5/8	2.6
29604	1/2-13	4-1/8	1/2	2 1/2	5/8	1	5/8	3.0
29605	5/8-11	3 1/2	5/8	1 5/8	3/4	1 1/4	3/4	4.6
29606	5/8-11	4 3/4	5/8	2 1/2	3/4	1 1/4	3/4	5.5

*B dimension indicates minimum length.
Not to be used for lifting.

Rod Ends
Threaded

- Material: Alloy Steel
- Finish: Black Oxide
- Heat Treat: 32-36 Rc
- Thread: Class 2A-UNC

* 150,000 PSI Tensile

Rod Ends are forged and finished for applications not requiring flat contact with the head. All holes are reamed. Rod Ends can be used with spherical flange assemblies, flange nuts and clamp assemblies.

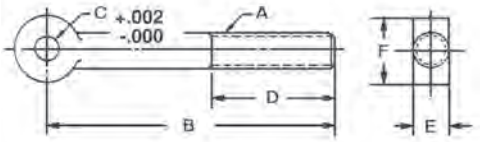

Part Number	Thread A	B	C	D Minimum	E	F	Wt. (lbs)
35301*	1/4-20	2	3/16	3/4	1/4	1/2	.04
35302	1/4-20	2	1/4	3/4	1/4	1/2	.03
35318*	5/16-18	3	1/4	1 1/2	5/16	5/8	.08
35319*	5/16-18	3	5/16	1 1/2	5/16	5/8	.08
35303*	3/8-16	3	5/16	1 1/2	3/8	3/4	.11
35320	3/8-16	4	5/16	1 3/4	3/8	3/4	.11
35304	3/8-16	2 3/16	3/8	1 1/4	3/8	3/4	.08
35305*	3/8-16	3	3/8	1 1/2	3/8	3/4	.11
35306*	3/8-16	5	3/8	2 1/2	3/8	3/4	.12
35307*	1/2-13	3 3/4	3/8	1 1/2	1/2	1	.25
35308	1/2-13	2 11/16	1/2	1 1/2	1/2	1	.19
35309	1/2-13	3 3/4	1/2	1 1/2	1/2	1	.24
35310	1/2-13	5	1/2	1 1/2	1/2	1	.31
35311	5/8-11	3 11/16	5/8	2	5/8	1 1/4	.40
35312*	5/8-11	4 1/2	5/8	2	5/8	1 1/4	.46
35314*	5/8-11	6	5/8	2 1/2	5/8	1 1/4	.60
35315*	3/4-10	4 1/2	3/4	2	3/4	1 1/2	.73
35321*	3/4-10	6	3/4	2 1/2	3/4	1 1/2	1.00
35317	1-8	8	1	3	1	2	2.25

*Conforms to TCMA. **Not to be used for lifting**.

Rod Ends
Stainless Steel

- Material: 303 Stainless
- Thread Class 2A-UNC

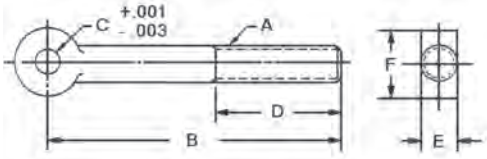

Part Number	Ref. A	B	Ref. C	D	E	F
35721	1/4-20	2 1/8	3/16	7/8	1/4	1/2
35722	1/4-20	2 1/8	1/4	7/8	1/4	1/2
35723	5/16-18	3 1/2	1/4	1 1/2	5/16	5/8
35724	5/16-18	3 1/2	5/16	1 1/2	5/16	5/8
35725	3/8-16	3 1/2	3/8	1 1/2	3/8	3/4
35726	3/8-16	5	3/8	2 1/2	3/8	3/4
35727	1/2-13	3 3/4	1/2	1 1/2	1/2	1
35728	1/2-13	5	1/2	2	1/2	1
35729	5/8-11	4 1/2	5/8	2	5/8	1 1/4
35730	5/8-11	6	5/8	3	5/8	1 1/4
35731	3/4-10	4 1/2	3/4	2	3/4	1 1/2
35732	3/4-10	6	3/4	2 1/2	3/4	1 1/2

Not to be used for lifting.

Rod Ends
Blank Forging

- Material: Standard, Alloy Steel Forging
  Stainless, 18-8 Forging

* Not Heat Treated

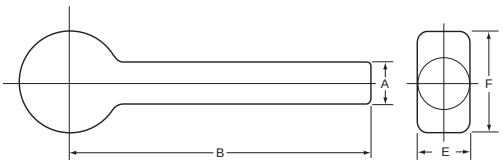

Part Number						
Standard	Stainless Steel	A	B*	E	Ref. F	Wt. (lbs)
35511	**35701**	1/4	2	1/4	1/2	.04
35512	**35702**	3/8	5	3/8	3/4	.13
35513	**35703**	1/2	6	1/2	1	.44
35514	**35704**	5/8	6	5/8	1 1/4	.70
35515	—	3/4	6	3/4	1 1/2	1.8
35516	—	1	8	1	2	2.5

*B dimension indicates minimum length. **Not to be used for lifting**.

Blank Rod Ends can be machined to your specifications; please send prints for quotation. Maximum thread length 1/2" from head.

Quarter Turn Screws

The diamond on all four corners of the Jergens Quarter Turn and Half Turn Screws, makes the opening and closing of jig lids easier. Ideally suited for clamping lids, covers and swing-away type bushing arms. Quarter Turn and Half Turn Screws may be machined for finishing requirements.

Part Number	A	B	C	D	E	F	Wt. (lbs) 10 Pcs.
34501*	10-32	7/8	1	1/2	1/2	3/16	.31
34502*	1/4-20	1	1 1/4	5/8	3/4	1/4	.47
34503	1/4-20	1 1/2	1 3/4	5/8	3/4	1/4	.48
34504*	5/16-18	1 1/4	1 1/2	3/4	1	5/16	.90
34505	5/16-18	1 3/4	2	3/4	1	5/16	1.10
34506*	3/8-16	1 1/4	1 1/2	1	1	3/8	1.25
34507	3/8-16	1 3/4	2	1	1	3/8	1.45
34508*	1/2-13	1 1/2	1 3/4	1	1 1/4	1/2	2.35
34509	1/2-13	2	2 1/4	1	1 1/4	1/2	2.65

*Conforms to TCMA

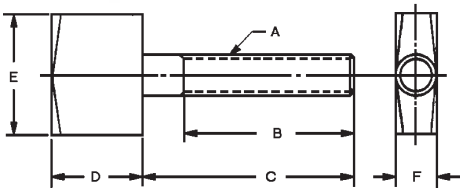

- Material: Stem, Low Carbon Steel
  Head, Low Carbon Steel
- Finish: Black Oxide
- Thread: 2A-UNC (inch); Class 6g (Metric)
  2A-UNF (10-32)

Part Number	A	B	C	D	E	F	Wt. (kg) 10 Pcs.
34571	M5 x 0.8	22	25	13	13	5	.14
34573	M6 x 1.0	25	32	16	19	6	.21
34575	M8 x 1.25	32	38	19	25	8	.41
34577	M10 x 1.5	32	38	25	25	10	.57
34579	M12 x 1.75	38	44	25	32	13	1.06

Half Turn Screws

- Material: Low Carbon Steel
- Finish: Black Oxide
- Thread: 2A-UNF (10-32)
  2A-UNC (other sizes)

Part Number	Thread A	B	C	D	E	F	Wt. (lbs) 10 Pcs.
34521	10-32	1	3/16	1-11/16	3/4	3/16	.3
34522	1/4-20	1-1/4	3/16	2	3/4	1/4	.3
34523	5/16-18	1-1/4	3/16	2-1/16	1	5/16	.3
34524	3/8-16	1-3/4	1/4	1-11/16	1-1/16	3/8	.3
34525	1/2-13	1-3/4	1/4	2-3/4	1-1/4	1/2	.3

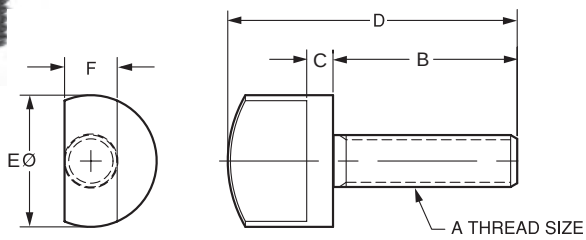

Screws

Thumb Screws

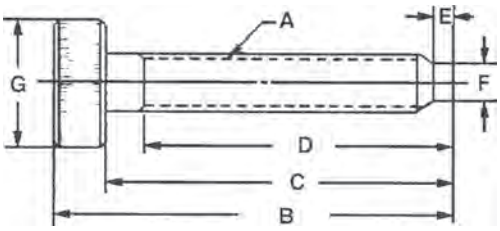

- Materials: 1215 Steel with black oxide finish, 303 Stainless
- Thread: 2A-UNC
  2A-UNF (10-32)

The half-dog point protects the threads in case of peening.

Part No. Steel	Part No. Stainless	A	B	C	D	E	F	G	Wt. (lbs)
43901	—	10-24	1 9/16	1 1/4	1 1/16	3/64	1/8	3/4	.44
43902	—	10-24	1 5/16	1 5/8	1 7/16	3/64	1/8	3/4	.47
43903*	—	10-24	2 5/16	2	1 13/16	3/64	1/8	3/4	.48
—	**44001**	10-32	1 3/16	1	3/4	7/32	3/16	3/4	.45
—	**44002**	10-32	1 7/16	1 1/4	1	7/32	3/16	3/4	.45
43900	—	10-32	1-3/4	1 1/2	1 3/8	7/32	3/16	3/4	.45
—	**44004**	1/4-20	1 5/16	1	25/32	3/32	11/64	1	.75
43904*	**44005***	1/4-20	1 13/16	1 1/2	1 1/4	1/16	5/32	1	.78
43905*	**44006**	1/4-20	2 5/16	2	1 3/4	1/16	5/32	1	.86
43906*	—	1/4-20	2 13/16	2 1/2	2 1/4	1/16	5/32	1	.91
43907	**44008**	5/16-18	2 1/8	1 3/4	1 7/16	5/64	13/64	1 1/8	1.30
43908	**44009**	5/16-18	2 5/8	2 1/4	1 15/16	5/64	13/64	1 1/8	1.36
43909	**44010**	5/16-18	3 1/8	2 3/4	2 7/16	5/64	13/64	1 1/8	1.50
43910*	**44011**	3/8-16	2 7/16	2	1 5/8	3/32	1/4	1 1/4	1.93
43911*	**44012***	3/8-16	2 15/16	2 1/2	2 1/8	3/32	1/4	1 1/4	2.00
43912*	**44013***	3/8-16	3 7/16	3	2 5/8	3/32	1/4	1 1/4	2.20
43913	—	1/2-13	2 15/16	2 1/2	2 1/8	1/8	11/32	1 1/4	2.55
—	**44014**	1/2-13	3	2 1/2	2	1/4	3/8	1 1/4	2.55
43914*	—	1/2-13	3 7/16	3	2 5/8	1/8	11/32	1 1/4	2.80
—	**44015**	1/2-13	3 1/2	3	2 1/2	1/4	3/8	1 1/4	3.00
43915*	—	1/2-13	3 15/16	3 1/2	3 1/8	1/8	11/32	1 1/4	3.10
—	**44016**	1/2-13	4	3 1/2	3	1/4	3/8	1 1/4	3.10

* Conforms to TCMA

Metric

Part Number	A	B	C	D	E	F	G	Wt. (Kg)
43971	M5x0.8	30	25	20	1.2	3	20	0.20
43972	M5x0.8	45	40	35	1.2	3	20	0.21
43973	M5x0.8	55	50	45	1.2	3	20	0.22
43974	M 6 x 1.0	50	40	35	1.5	4	25	0.35
43975	M 6 x 1.0	60	50	45	1.5	4	25	0.39
43976	M 6 x 1.0	75	65	55	1.5	4	25	0.41
43977	M8 x 1.25	50	40	35	2.4	5	30	0.59
43978	M8 x 1.25	60	50	45	2.4	5	30	0.62
43979	M8 x 1.25	75	65	60	2.4	5	30	0.68
43980	M10 x 1.5	60	50	45	2.4	6	30	0.88
43981	M10 x 1.5	75	65	60	2.4	6	30	0.91
43982	M10 x 1.5	85	75	70	2.4	6	30	1.00
43983	M 12 x 1.75	90	75	70	3	11	30	1.27
43984	M 12 x 1.75	105	90	85	3	11	30	1.41
43985	M 12 x 1.75	80	65	55	3	11	30	1.25

Tru-Center™ Toggle Products

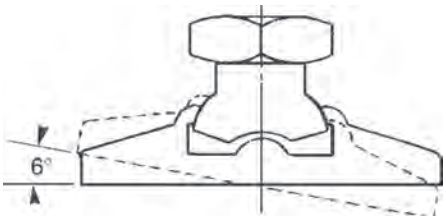

The Jergens patented "Tru-Center" products are the only pad type on the market to provide true center line clamping. The cut-away drawing illustrates how this works. The center line of the pad and the center line of the nut always intersect at the point of contact between the pad and the workpiece.

Adjustable Torque Toggle Screws

Tru-Center Product

Perfect for delicate and fine clamping. Once the end holding force is reached, the head breaks free. Larger radius, straight knurled head for easy turning.

- Material: Stem, Stressproof®
  Pad, 4140
- Finish: Stem, Black Oxide
  Head, Chrome Plate
- Thread: 2A-UNC
- Pad: Angular movement either side of center (total 16°)

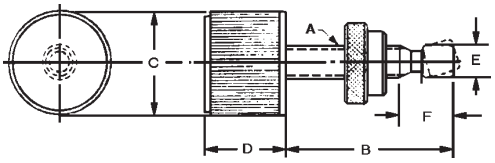

Part Number	A	B	C	D	E	F	End Force (lbs)	Wt. (lbs) 10 Pcs.
31101	10-24	1 1/4	1	23/32	.140	3/16	0-50	1.7
31102	1/4-20	1 1/2	1	23/32	.185	15/64	0-50	1.7
31103	1/4-20	2 1/2	1	23/32	.185	15/64	0-50	1.8
31104	5/16-18	1 3/4	1	23/32	.240	9/32	0-50	1.9
31105	5/16-18	2 3/4	1	23/32	.240	9/32	0-50	2.1
31106	3/8-16	2	1 1/4	25/32	.294	11/32	0-60	3.0
31107	1/2-13	3	1 1/4	25/32	.400	7/16	0-60	4.2

Hand Knob Toggle Screws

Tru-Center Product

For clamping of irregular surfaces while the swivel shoe prevents marring of polished surfaces. Shoe is hardened for longer life. The cast iron hand knob is included for hand tightening. To remove pad for installation, pull and turn counter-clockwise.

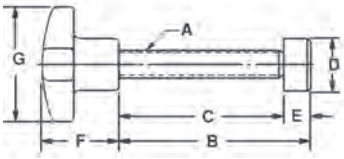

- Material: Stem, Stressproof®
  Pad, 4140
  Head, Cast Iron
- Finish: Stem, Black Oxide
  Pad, Zinc Plate
  Head, Cadnium Plate
- Thread: 2A-UNC
- Pad: Angular movement either side of center (total 16°)

Part Number	A	B	C	D	E	F	G	Wt. (lbs) 10 Pcs.
36301	3/8-16	2	1 21/32	11/16	3/8	1 1/8	2	.21
36302	3/8-16	2 3/4	2 13/32	11/16	3/8	1 1/8	2	.24
36303	3/8-16	3 5/8	3 9/32	11/16	3/8	1 1/8	2	.25
36304	1/2-13	2 1/8	1 21/32	13/16	15/32	1 1/2	2 1/2	.44
36305	1/2-13	2 3/4	2 9/32	13/16	15/32	1 1/2	2 1/2	.48
36306	1/2-13	3 3/8	2 29/32	13/16	15/32	1 1/2	2 1/2	.52
36307	1/2-13	4	3 17/32	13/16	15/32	1 1/2	2 1/2	.55
36308	5/8-11	3	2 17/32	15/16	1/2	2	3	1.38
36309	5/8-11	3 3/4	3 9/32	15/16	1/2	2	3	1.50
36310	3/4-10	4 7/8	4 11/32	1 1/8	19/32	2	3	1.56

Tru-Center™ Toggle Products

Socket Toggle Screws

- Material: 4140
- Finish: Black Oxide
- Heat Treat: 38-42 Rc
- Screws may be inserted without removing pads.

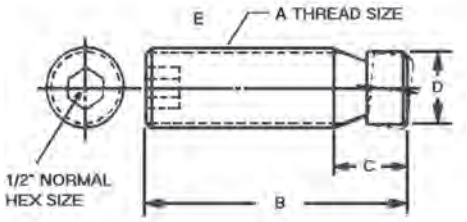

Part Number	Thread Size A	B	C	D	E Hex Size	Wt. (lbs) 10 Pcs.
33301*	1/4-20	1/2	15/64	.185	1/8	.03
33302*	1/4-20	1	15/64	.185	1/8	.09
33303*	5/16-18	3/4	9/32	.240	5/32	.09
33304*	5/16-18	1 1/2	9/32	.240	5/32	.24
33305*	3/8-16	1	11/32	.294	3/16	.20
33306*	3/8-16	2	11/32	.294	3/16	.45
33307*	1/2-13	1	7/16	.400	1/4	.30
33308*	1/2-13	2	7/16	.400	1/4	.78
33310*	5/8-11	2	17/32	.507	5/16	1.25

*Conforms to TCMA

Toggle Thumb Screws

Same as our standard Thumb Screw only with the addition of our patented swivel pad on the end.

- Material: Stem and Head 1215, Pad, 4140
- Finish: Black Oxide
- Thread: 2A-UNC

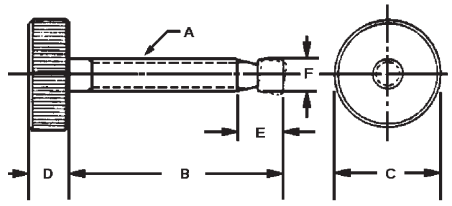

Part Number	Thread Size A	B	C	D	E	F	Wt. (lbs) 10 Pcs.
33501	10-24	1	3/4	5/16	3/16	.140	.31
33502	10-24	1 1/2	3/4	5/16	3/16	.140	.47
33503*	1/4-20	1 1/2	1	5/16	15/64	.185	.78
33504*	1/4-20	2	1	5/16	15/64	.185	.94
33505*	5/16-18	1 1/2	1 1/8	3/8	9/32	.240	1.05
33506*	5/16-18	2	1 1/8	3/8	9/32	.240	1.25
33507*	5/16-18	2 1/2	1 1/8	3/8	9/32	.240	1.40
33508*	3/8-16	1 1/2	1 1/4	7/16	11/32	.294	1.70
33509*	3/8-16	2	1 1/4	7/16	11/32	.294	1.88
33510*	3/8-16	2 1/2	1 1/4	7/16	11/32	.294	2.04
33511*	3/8-16	3	1 1/4	7/16	11/32	.294	2.20

*Conforms to TCMA

Plastic Pad Covers

- Material: Nylon

Where soft material with fine finished surfaces must be clamped with relatively high pressures, we recommend the use of the Jergens Plastic Pad Covers. Resistant to oils and cutting compounds, they snap over the swivel end of our Hand KnobToggle Screws, Socket Toggle Screws, Toggle Thumb Screws, Toggle Pads and adjustable Torque Thumb Screws.

Part Number	To Fit Over O.D. of Pad	O.D. of Plastic Pad
32901	.140	.250
32902	.185	.250
32903	.240	.312
32904	.294	.375
32905	.400	.500

Part Number	To Fit Over O.D. of Pad	O.D. of Plastic Pad
32907	9/16	.625
32908	5/8	.750
32909	11/16	.812
32910	13/16	.937
32911	15/16	1.062

Plastic Pad Covers snap over outside diameter of Jergens swivel pads.

Tru-Center™ Toggle Products

Toggle Pads

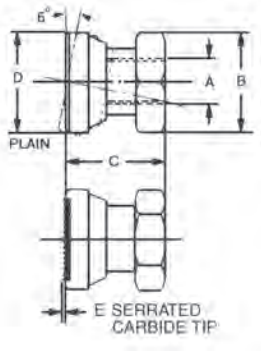

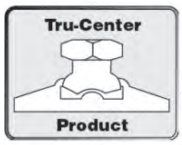

Carbide Tipped Toggle Pads provide multiple point contact to compensate for surfaces that are rough or out-of-round. Points will embed themselves in the workpiece, which assures positive gripping. It eliminates possible radial load on the workpiece.

- Material: 4140 or Carbide Insert Tip
- Finish: Black Oxide
- Heat Treat: Plain Pad Rc 36-40
- Thread: 2B-UNC

Part Number		Thread Size	Across Flats	Plain	Serrated			Wt. (lbs)
Plain	Serrated	A	B	C	C	D	E	10 Pcs.
43502	**43702**	1/4-20	1/2	1/2	9/16	9/16	.055	.20
43503	**43703**	5/16-18	9/16	11/16	3/4	5/8	.055	.28
43504	**43704**	3/8-16	5/8	25/32	3/4	11/16	.055	.41
43505	**43705**	1/2-13	3/4	7/8	15/16	13/16	.055	.62
43506	**43706**	5/8-11	7/8	1	1 1/32	15/16	.086	.94
43507*	**43707**	3/4-10	1 1/16	1 5/32	1 1/4	1 1/8	.086	1.60

*Plastic Pad is not available for this item.

Toggle Pads
Metric

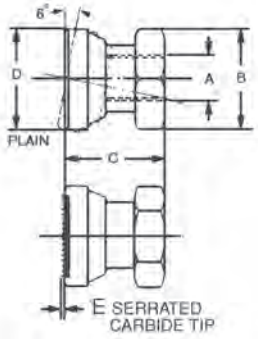

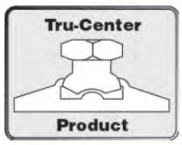

- Material: 4140 or Carbide Insert Tip
- Finish: Black Oxide
- Heat Treat: Plain Pad Rc36-40
- Thread class: 6h

Part Number		Thread Size	Across Flats	Plain	Serrated			Wt. (kg)
Plain	Serrated	A	B	C	C	D	E	10 Pcs.
43552	**43752**	M6 x 1.0	12	13	14.4	14	1.4	.09
43553	**43753**	M8 x 1.25	14	17	18.4	16	1.4	.13
43554	**43754**	M10 x 1.5	16	18	20.4	18	1.4	.19
43555	**43755**	M12 x 1.75	22	22	23.4	21	1.4	.28
43556	**43756**	M16 x 2.0	26	25	26.4	24	2.2	.43
43557	**43757**	M20 x 2.5	30	29	31.2	28	2.2	.73

Note: Metric Toggle Pads have two flats instead of a hex configuration on the head.

Leveling Pads

Provides a greater surface area where heavy loads are to be applied or where heavy pressures must be exerted on flexible or softer materials. Pad face swivels and aligns with no damage to the uneven surfaces.

Tapped

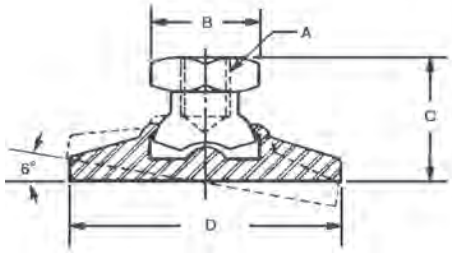

SWIVELS 6° EACH SIDE OF CENTER

- Material: 4140
- Finish: Zinc Plated
- Heat Treat: Rc 36-40
- Thread: UNC-2B

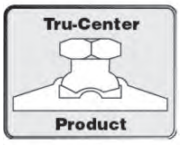

Part Number	Thread Size A	Across Flats B	C	D	Load Capacity (lbs)	Wt. (lbs)
32501	3/8-16	5/8	3/4	1 1/4	2300	.10
32502	1/2-13	3/4	1	1 7/8	4200	.22
32503	5/8-11	7/8	1 1/8	2 1/4	6600	.42
32504	3/4-10	1 1/16	1 7/16	3	10,000	.84

Metric Tapped

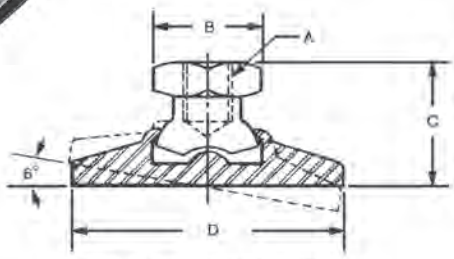

SWIVELS 6° EACH SIDE OF CENTER

- Material: 4140
- Finish: Zinc Plated
- Heat Treat: Rc36-40
- Thread class: 6h

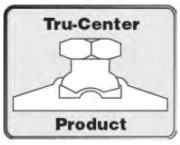

Part Number	Thread Size A	Across Flats B	C	D	Load Capacity (kg)	Wt. (kg)
32551	M10 x 1.5	16	21	32	1000	.05
32552	M12 x 1.75	22	27	48	1900	.10
32553	M16 x 2.0	26	31	57	2900	.19
32554	M20 x 2.5	30	39	76	4500	.38

Note: Metric Toggle Pads have two flats instead of a hex configuration on the head.

Leveling Pads

Threaded

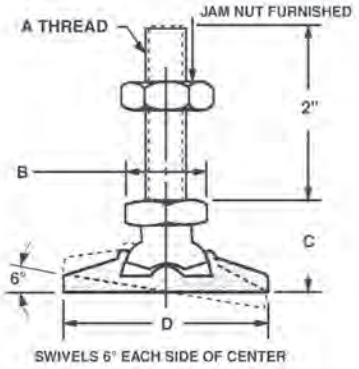

- Material: 4140
- Finish: Zinc Plated Pad
- Heat Treat: Rc 36-40
- Thread: UNC-2A

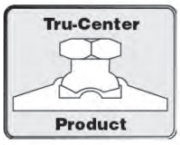

Part Number	Thread Size A	Across Flats B	C	D	Load Capacity (lbs)	Wt. (lbs)
32521	3/8-16	5/8	3/4	1 1/4	2300	.16
32522	1/2-13	3/4	1	1 7/8	4200	.37
32523	5/8-11	7/8	1 1/8	2 1/4	6600	.58
32524	3/4-10	1 1/16	1 7/16	3	10,000	1.22

Jam nut is furnished.

Metric Threaded

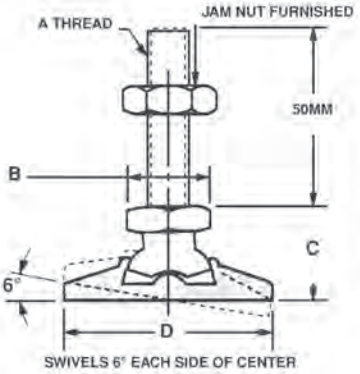

- Material: 4140
- Finish: Zinc Plated
- Heat Treat: Rc36-40
- Thread class: 6g

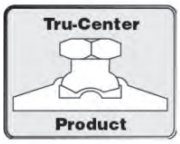

Part Number	Thread Size A	Across Flats B	C	D	Load Capacity (kg)	Wt. (kg)
32571	M10 x 1.5	16	21	32	1000	.07
32572	M12 x 1.75	22	27	48	1900	.17
32573	M16 x 2.0	26	31	57	2900	.26
32574	M20 x 2.5	30	39	76	4500	.55

Note: Metric Toggle Pads have two flats instead of a hex configuration on the head.

Leveling Mounts

- Material: 1214 Steel
- Zinc-plated, yellow finish
- Non-Skid Material: Neoprene
- Case hardened, file hard
- Swivels 20°, ±10° from center in all directions
- Available with non-skid on base
- Available in stainless steel, or with a delrin pad, and in larger sizes upon request.

Tapped

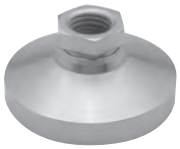

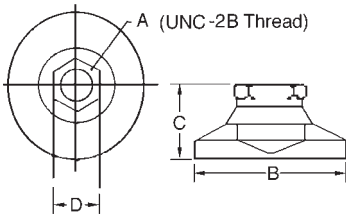

Part Number					Across Flats	Maximum Load (lbs)	
Standard	Non-skid	A	B	C*	D	Standard	Non-skid
32601	**32651**	10-32	3/4	17/32	3/8	700	550
32602	**32652**	1/4-20	1	45/64	1/2	1000	825
32606	**32656**	3/8-16	1 1/4	7/8	5/8	3750	2820
32608	**32658**	1/2-13	1 7/8	1 1/8	3/4	5000	3750
32610	**32660**	5/8-11	2 1/2	1 1/4	7/8	6000	5000
32612	**32662**	3/4-10	3	1 1/2	1 1/16	7400	6000
32616	**32666**	1-8	4	1 7/8	1 3/8	21000	16500

*Add 1/8" to C Dimension for non-skid style.

Threaded

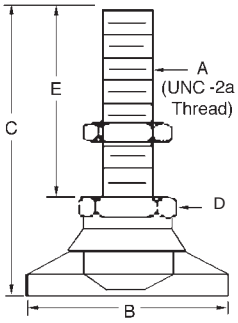

Part Number					Across Flats		Maximum Load (lbs)	
Standard	Non-skid	A	B	C*	D	E	Standard	Non-skid
32621	**32671**	10-32	3/4	1 17/32	3/8	1	700	550
32623	**32673**	1/4-20	1	1 61/64	1/2	1 1/4	1000	825
32626	**32676**	3/8-16	1 1/4	2 7/8	5/8	2	3750	2850
32629	**32679**	1/2-13	1 7/8	3 1/8	3/4	2	5000	3750
32632	**32682**	5/8-11	2 1/2	3 1/4	7/8	2	6000	4350
32635	**32685**	3/4-10	3	3 1/2	1 1/16	2	7400	5500
32640	**32690**	1-8	4	5 3/8	1 3/8	3 1/2	20000	16500

*Add 1/8" to C Dimension for non-skid style.

Yokes
Tapped

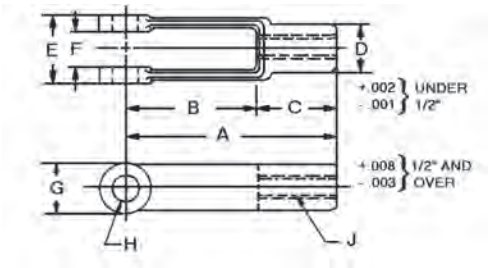

- Material: C-1021 Forging
- Finish: Black Oxide
- Thread: 2B

Jergens offers these yokes for attaching to threaded linkage at stem end. The forged holes are reamed and faced-off parallel inside and outside the yoke ends.

Part Number Coarse Pitch	UNC J	Part Number Fine Pitch	UNF J	A	B	C	D	E	F	G	H	Wt. (lbs) 10 Pcs.
		45501	10-32	1 9/16	1	9/16	5/16	7/16	3/16	3/8	3/16	.21
45302	1/4-20	**45502**	1/4-28	2	1 1/4	3/4	7/16	5/8	9/32	1/2	1/4	.62
45303	5/16-18	**45503**	5/16-24	2 1/4	1 7/16	13/16	1/2	3/4	11/32	19/32	5/16	.94
45304	3/8-16	**45504**	3/8-24	2 1/2	1 5/8	7/8	5/8	7/8	7/16	11/16	3/8	1.45
45305	7/16-14	**45505**	7/16-20	2 7/8	1 7/8	1	23/32	1	1/2	13/16	7/16	2.35
45306	1/2-13	**45506**	1/2-20	3	1 7/8	1 1/8	13/16	1 1/8	9/16	15/16	1/2	3.10
45307	1/2-13	**45507**	1/2-20	4 3/16	3 1/16	1 1/8	13/16	1 1/8	9/16	15/16	1/2	4.35
45308	5/8-11	**45508**	5/8-18	4 15/16	3 11/16	1 1/4	1 1/16	1 3/8	11/16	1 3/16	5/8	8.10
45309	3/4-10	**45509**	3/4-16	4	2 3/4	1 1/4	1 1/8	1 1/2	11/16	1 3/8	5/8	7.50
45310	3/4-10	—	—	6 1/16	4 9/16	1 1/2	1 1/4	1 5/8	13/16	1 7/16	3/4	15.00
45312	1-8	—	—	8	6	2	1 5/8	2 1/8	1 1/16	1 15/16	1	32.50

Yokes

Threaded

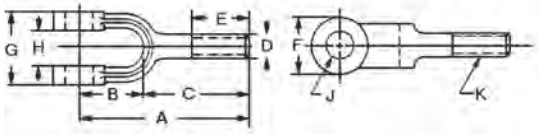

- Material: C-1021 Forging
- Finish: Black Oxide
- Thread: 2A-UNC

This style yoke is similar to the above except the stem is threaded for attaching to tapped linkage.

Part Number	K	A	B	C	D	E	F	G	H	J	Wt. (lbs) 10 Pcs.
45902	1/4-20	1 3/4	5/8	1 1/8	1/4	3/4	1/2	5/8	9/32	1/4	.47
45903	5/16-18	2	3/4	1 1/4	5/16	3/4	19/32	3/4	11/32	5/16	.85
45904	3/8-16	2 1/8	27/32	1 9/32	3/8	3/4	11/16	7/8	7/16	3/8	1.10
45906	1/2-13	2 1/2	1 1/8	1 3/8	1/2	3/4	15/16	1 1/8	9/16	1/2	2.35
45907	5/8-11	2 7/8	1 7/16	1 7/16	5/8	3/4	1 3/16	1 3/8	11/16	5/8	4.20
45908	3/4-10	3 5/8	1 11/16	1 15/16	3/4	1 1/4	1 7/16	1 5/8	13/16	3/4	7.35
45910	1-8	4 1/2	2 1/2	2	1	1 1/8	1 15/16	2 1/8	1 1/16	1	17.50

Clevis Pins

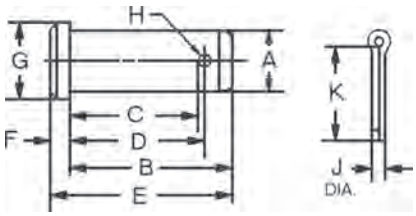

- Material: Low Carbon Steel
- All Clevis Pins supplied with cotter pins.

Part Number	A	B	C	D	E	F	G	H	J	K	Wt. (lbs) 10 Pcs.
32701	3/16	37/64	29/64	31/64	41/64	1/16	5/16	5/64	1/16	1/2	.08
32702	1/4	49/64	41/64	43/64	55/64	3/32	3/8	5/64	1/16	1/2	.15
32703	5/16	15/16	49/64	13/16	1 1/32	3/32	7/16	7/64	3/32	1/2	.30
32704	3/8	1 1/16	57/64	15/16	1 3/16	1/8	1/2	7/64	3/32	5/8	.45
32705	7/16	1 3/16	1 1/64	1 1/16	1 11/32	5/32	9/16	7/64	3/32	5/8	.60
32706	1/2	1 23/64	1 9/64	1 13/64	1 33/64	5/32	5/8	9/64	1/8	1	1.00
32707	5/8	1 39/64	1 25/64	1 29/64	1 13/16	13/64	13/16	9/64	1/8	1	1.18
32708	5/8	1 3/4	1 33/64	1 19/32	1 63/64	13/64	13/16	9/64	1/8	1	1.82
32709	3/4	1 29/32	1 41/64	1 23/32	2 5/32	1/4	15/16	11/64	5/32	1 1/2	3.00
32711	1	2 13/32	2 9/64	2 7/32	2 3/4	11/32	1 3/16	11/64	5/32	1 1/2	7.00

Steel Shaft Collars

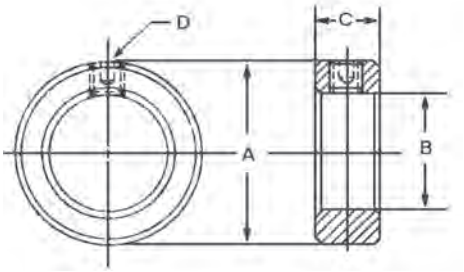

- Material: Low Carbon Steel
- Finish: Zinc Plate
- Set Screws Furnished
- Tolerances on I.D. +.005
  -.000

Part Number	A	B	C	D	Wt. (lbs) 10 Pcs.
40101	5/8	1/4	3/8	10-32	0.21
40102	5/8	5/16	3/8	10-32	0.21
40103	3/4	3/8	7/16	1/4-28	0.4
40104	7/8	1/2	1/2	1/4-28	0.6
40105	1 1/8	5/8	1/2	1/4-28	0.94
40106	1 1/4	3/4	1/2	5/16-18	1
40107	1 3/8	7/8	9/16	5/16-18	1.13
40108	1 1/2	1	9/16	5/16-18	1.5
40109	1 3/4	1 1/8	9/16	5/16-18	2
40110	2	1 1/4	11/16	3/8-16	3.5
40111	2 1/4	1 3/8	3/4	3/8-16	4
40112	2 1/4	1 1/2	3/4	3/8-16	4.3
40113	2 7/8	1 3/4	7/8	1/2-13	10.9
40114	3	2	7/8	1/2-13	9.5

Tee Strap Bolts

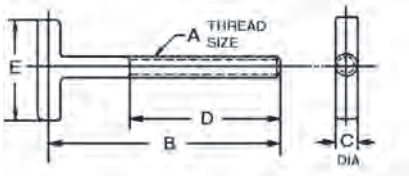

- Material: C-1021 Forging
- Finish: Black Oxide
- Thread: 2A-UNC

Part Number	Thread Size A	B	C	D	E	Wt. (lbs)
43101	1/4-20	2 1/2	1/4	1 1/2	1 1/4	.09
43102	3/8-16	5	3/8	4	1 3/4	.19
43103	1/2-13	6	1/2	5	3	.44

Alloy Steel Studs

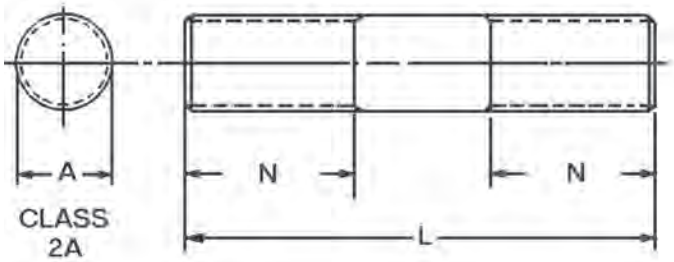

- Material: Stressproof® (125,000 psi Min.) Tensile (100,000 psi Min.)Yield
- Finish: Black Oxide
- Available in metric sizes. See the next page.

Longer or special studs are available upon request. Please send your print or sketch to our Customer Service Department.

Thread A	L	Part Number	N	Wt. (lbs) 10 Pcs
1/4-20	1 1/2	**37720**	7/16	.21
1/4-20	2	**37721**	11/16	.28
1/4-20	2 1/2	**37722**	15/16	.35
1/4-20	3	**37723**	1	.42
1/4-20	3 1/2	**37724**	1	.49
1/4-20	4	**37725**	1	.56
5/16-18	1 1/2	**37920**	7/16	.33
5/16-18	2	**37921**	11/16	.44
5/16-18	2 1/2	**37922**	15/16	.55
5/16-18	3	**37923**	1 1/8	.66
5/16-18	3 1/2	**37924**	1 1/8	.77
5/16-18	4	**37925**	1 1/8	.88
3/8-16	1 1/2	**38120**	3/8	.54
3/8-16	2	**38121**	5/8	.62
3/8-16	2 1/2	**38122**	7/8	.77
3/8-16	3	**38123**	1 1/8	.93
3/8-16	3 1/2	**38124**	1 1/4	1.10
3/8-16	4	**38125**	1 1/4	1.24
3/8-16	4 1/2	**38126**	1 1/4	1.39
3/8-16	5	**38127**	1 1/4	1.55
3/8-16	5 1/2	**38128**	1 1/4	1.71
3/8-16	6	**38129**	1 1/4	1.86
3/8-16	7	**38131**	1 1/4	2.27
3/8-16	8	**38133**	1 1/4	2.48
1/2-13	2	**38321**	5/8	1.10
1/2-13	2 1/2	**38322**	7/8	1.37
1/2-13	3	**38323**	1 1/8	1.65
1/2-13	3 1/2	**38324**	1 3/8	1.92
1/2-13	4	**38325**	1 1/2	2.20
1/2-13	4 1/2	**38326**	1 1/2	2.47
1/2-13	5	**38327**	1 1/2	2.75
1/2-13	5 1/2	**38328**	1 1/2	3.02
1/2-13	6	**38329**	1 1/2	3.30
1/2-13	7	**38331**	1 1/2	3.85
1/2-13	8	**38333**	1 1/2	4.40
1/2-13	9	**38334**	1 1/2	4.95
1/2-13	10	**38335**	1 1/2	5.50
1/2-13	12	**38336**	1 1/2	6.60

Thread A	L	Part Number	N	Wt. (lbs) 10 Pcs.
5/8-11	2 1/2	**38520**	13/16	2.12
5/8-11	3	**38521**	1 1/16	2.55
5/8-11	3 1/2	**38522**	1 5/16	2.97
5/8-11	4	**38523**	1 9/16	3.40
5/8-11	4 1/2	**38524**	1 3/4	3.82
5/8-11	5	**38525**	1 3/4	3.25
5/8-11	5 1/2	**38526**	1 3/4	4.68
5/8-11	6	**38527**	1 3/4	5.10
5/8-11	7	**38529**	1 3/4	5.90
5/8-11	8	**38531**	1 3/4	6.80
5/8-11	9	**38532**	1 3/4	7.60
5/8-11	10	**38533**	1 3/4	8.50
5/8-11	12	**38534**	1 3/4	10.20
3/4-10	3	**38721**	15/16	3.75
3/4-10	3 1/2	**38722**	1 3/16	4.35
3/4-10	4	**38723**	1 7/16	5.00
3/4-10	4 1/2	**38724**	1 11/16	5.60
3/4-10	5	**38725**	1 15/16	6.20
3/4-10	5 1/2	**38726**	2	6.90
3/4-10	6	**38727**	2	7.50
3/4-10	7	**38729**	2	8.75
3/4-10	8	**38731**	2	10.00
3/4-10	10	**38733**	2	12.50
3/4-10	12	**38734**	2	15.00
7/8-9	4	**38922**	1 13/32	6.80
7/8-9	5	**38923**	1 29/32	8.50
7/8-9	6	**38924**	2 1/4	10.20
7/8-9	8	**38925**	2 1/4	13.60
7/8-9	10	**38926**	2 1/4	17.00
7/8-9	12	**38927**	2 1/4	20.40
1-8	4	**39122**	1 3/8	8.80
1-8	5	**39123**	1 7/8	11.00
1-8	6	**39124**	2 3/8	13.20
1-8	8	**39125**	2 1/2	17.60
1-8	10	**39126**	2 1/2	22.00
1-8	12	**39127**	2 1/2	26.40

Studs
Metric

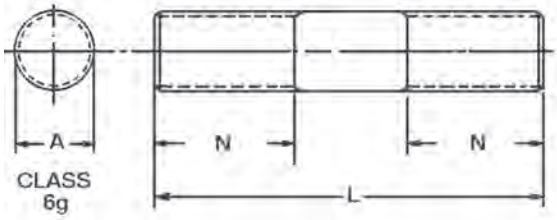

- Material: Stressproof®
  862 Tensile (MPa)
  689 Yield (MPa)
- Finish: Black Oxide
- Longer or special studs are available on request

Thread A	L	Part Number	N	Wt. kg
M6 x 1.0	50	**37771**	18	.04
M6 x 1.0	66	**37772**	25	.06
M6 x 1.0	81	**37773**	28	.06
M6 x 1.0	96	**37774**	28	.09
M8 x 1.25	50	**37971**	18	.09
M8 x 1.25	66	**37972**	25	.11
M8 x 1.25	81	**37973**	32	.13
M8 x 1.25	96	**37974**	32	.15
M8 x 1.25	111	**37975**	32	.18
M10 x 1.5	50	**38171**	16	.13
M10 x 1.5	66	**38172**	23	.18
M10 x 1.5	80	**38173**	30	.20
M10 x 1.5	95	**38174**	35	.24
M10 x 1.5	110	**38175**	35	.29
M10 x 1.5	125	**38176**	39	.31
M10 x 1.5	140	**38177**	39	.35
M10 x 1.5	155	**38178**	39	.40
M12 x 1.75	50	**38371**	16	.18
M12 x 1.75	66	**38372**	23	.24
M12 x 1.75	81	**38373**	31	.29
M12 x 1.75	95	**38374**	40	.33
M12 x 1.75	111	**38375**	40	.40
M12 x 1.75	125	**38376**	40	.46
M12 x 1.75	141	**38377**	40	.53
M12 x 1.75	156	**38378**	40	.55
M16 x 2.0	80	**38571**	29	.51
M16 x 2.0	95	**38572**	36	.59
M16 x 2.0	110	**38573**	44	.70
M16 x 2.0	125	**38574**	47	.81
M16 x 2.0	150	**38575**	47	1.00
M16 x 2.0	175	**38576**	47	1.17
M16 x 2.0	200	**38577**	47	1.36
M20 x 2.5	81	**38771**	30	.84
M20 x 2.5	96	**38772**	37	1.0
M20 x 2.5	111	**38773**	45	1.14
M20 x 2.5	126	**38774**	52	1.25
M20 x 2.5	151	**38775**	48	1.54
M20 x 2.5	176	**38776**	56	1.85
M20 x 2.5	201	**38777**	56	2.16

All Dimensions in Millimeters.

Fixture Studs
Stainless Steel

• Material: 303 Stainless

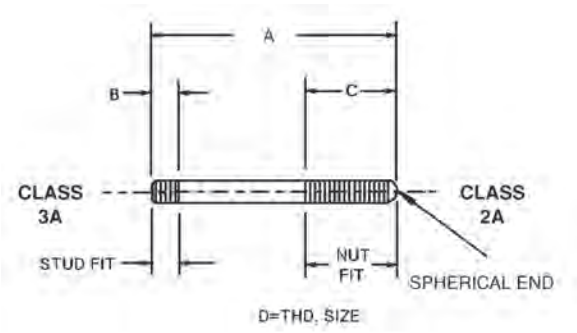

Part Number	A	Stud Fit B	Nut Fit C	Thread
37601	1	7/32	1/2	10-32
37602	1 1/2	7/32	3/4	10-32
37603	2	7/32	3/4	10-32
37802	1 1/2	9/32	5/8	1/4-20
37804	2	9/32	3/4	1/4-20
37806	2 1/2	9/32	3/4	1/4-20
37808	3	9/32	1	1/4-20
38002	1 1/2	11/32	5/8	5/16-18
38004	2	11/32	1	5/16-18
38006	2 1/2	11/32	1 1/4	5/16-18
38008	3	11/32	1 3/8	5/16-18
38009	3 1/2	11/32	1 1/2	5/16-18
38010	4	11/32	1 1/2	5/16-18
38201	1 5/8	11/32	3/4	3/8-16
38202	2	11/32	1	3/8-16
38204	2 1/2	11/32	1 1/4	3/8-16
38206	3	11/32	1 3/8	3/8-16
38207	3 1/2	11/32	1 1/2	3/8-16
38208	4	11/32	1 1/2	3/8-16

Set-Up Studs
Stainless Steel

• Material: 303 Stainless

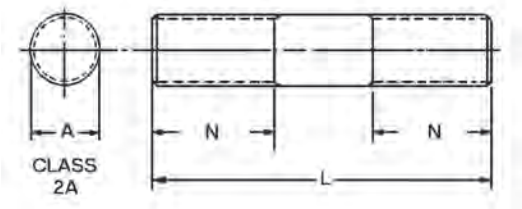

Part Number	Thread A	L	N
38421	1/2-13	2	3/4
38422	1/2-13	2 1/2	1 1/8
38423	1/2-13	3	1 3/8
38424	1/2-13	3 1/2	1 1/2
38425	1/2-13	4	1 1/2
38426	1/2-13	4 1/2	1 1/2
38427	1/2-13	5	1 1/2
38428	1/2-13	5 1/2	1 1/2
38429	1/2-13	6	1 1/2
38431	1/2-13	7	1 1/2
38433	1/2-13	8	1 1/2
38434	1/2-13	9	1 1/2
38435	1/2-13	10	1 1/2
38436	1/2-13	12	1 1/2

Part Number	Thread A	L	N
38620	5/8-11	2 1/2	1 1/8
38621	5/8-11	3	1 3/8
38622	5/8-11	3 1/2	1 3/4
38623	5/8-11	4	1 3/4
38624	5/8-11	4 1/2	1 3/4
38625	5/8-11	5	1 3/4
38626	5/8-11	5 1/2	1 3/4
38627	5/8-11	6	1 3/4
38629	5/8-11	7	1 3/4
38631	5/8-11	8	1 3/4
38632	5/8-11	9	1 3/4
38633	5/8-11	10	1 3/4
38634	5/8-11	12	1 3/4

Part Number	Thread A	L	N
38821	3/4-10	3	1 3/8
38822	3/4-10	3 1/2	1 1/2
38823	3/4-10	4	1 3/4
38824	3/4-10	4 1/2	2
38825	3/4-10	5	2
38826	3/4-10	5 1/2	2
38827	3/4-10	6	2
38829	3/4-10	7	2
38831	3/4-10	8	2
38833	3/4-10	10	2
38834	3/4-10	12	2

T-Slot Bolts

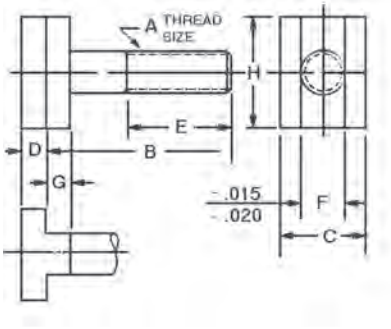

Jergens Feature:

Protect your expensive machine table slots with Jergens T-Slot Bolts. The completely finished machined head provides at least 50% more bearing surface under your table slot. T-Slot Bolts outlast T-Bolts in wearability in most applications.

- Material: Alloy Steel
- Finish: Black Oxide
- Heat Treat: Rc 34-38
- Thread: 2A-UNC
- Available in lengths up to 24"

Part Number	Thread Size A	B	C	D	E	F	G	H	Wt. (lbs)
44101	1/2-13	2	7/8	5/16	1	1/2	9/32	1 1/4	.22
44102	1/2-13	2 1/2	7/8	5/16	1 1/4	1/2	9/32	1 1/4	.25
44103	1/2-13	3	7/8	5/16	1 1/2	1/2	9/32	1 1/4	.27
44104	1/2-13	3 1/2	7/8	5/16	1 1/2	1/2	9/32	1 1/4	.30
44105	1/2-13	4	7/8	5/16	1 1/2	1/2	9/32	1 1/4	.33
44106	1/2-13	5	7/8	5/16	2	1/2	9/32	1 1/4	.37
44107	1/2-13	6	7/8	5/16	2	1/2	9/32	1 1/4	.44
44108	1/2-13	8	7/8	5/16	2	1/2	9/32	1 1/4	.53
44301	5/8-11	2	1 1/8	3/8	1 1/4	5/8	3/8	1 1/2	.39
44302	5/8-11	2 1/2	1 1/8	3/8	1 1/4	5/8	3/8	1 1/2	.41
44303	5/8-11	3	1 1/8	3/8	1 1/2	5/8	3/8	1 1/2	.44
44304	5/8-11	3 1/2	1 1/8	3/8	1 1/2	5/8	3/8	1 1/2	.50
44305	5/8-11	4	1 1/8	3/8	1 1/2	5/8	3/8	1 1/2	.55
44306	5/8-11	5	1 1/8	3/8	1 1/2	5/8	3/8	1 1/2	.62
44307	5/8-11	6	1 1/8	3/8	1 1/2	5/8	3/8	1 1/2	.72
44308	5/8-11	8	1 1/8	3/8	3	5/8	3/8	1 1/2	.85
44309	5/8-11	10	1 1/8	3/8	3	5/8	3/8	1 1/2	1.00
44310	5/8-11	12	1 1/8	3/8	3	5/8	3/8	1 1/2	1.25
44502	3/4-10	2 1/2	1 5/16	7/16	1 1/4	3/4	7/16	1 3/4	.64
44503	3/4-10	3	1 5/16	7/16	1 1/2	3/4	7/16	1 3/4	.70
44504	3/4-10	3 1/2	1 5/16	7/16	1 1/2	3/4	7/16	1 3/4	.77
44505	3/4-10	4	1 5/16	7/16	1 1/2	3/4	7/16	1 3/4	.85
44506	3/4-10	5	1 5/16	7/16	1 1/2	3/4	7/16	1 3/4	.95
44507	3/4-10	6	1 5/16	7/16	1 1/2	3/4	7/16	1 3/4	1.05
44508	3/4-10	8	1 5/16	7/16	3	3/4	7/16	1 3/4	1.25
44509	3/4-10	10	1 5/16	7/16	3	3/4	7/16	1 3/4	1.45
44510	3/4-10	12	1 5/16	7/16	3	3/4	7/16	1 3/4	1.75
44701	1-8	3 1/2	1 11/16	1/2	2	1	1/2	2 1/4	1.25
44702	1-8	4	1 11/16	1/2	2	1	1/2	2 1/4	1.50
44703	1-8	4 1/2	1 11/16	1/2	2 1/2	1	1/2	2 1/4	1.62
44704	1-8	5	1 11/16	1/2	2 1/2	1	1/2	2 1/4	1.75
44705	1-8	6	1 11/16	1/2	2 1/2	1	1/2	2 1/4	2.00
44706	1-8	8	1 11/16	1/2	3	1	1/2	2 1/4	2.40
44707	1-8	10	1 11/16	1/2	3	1	1/2	2 1/4	2.75
44708	1-8	12	1 11/16	1/2	3	1	1/2	2 1/4	3.10

T-Bolts

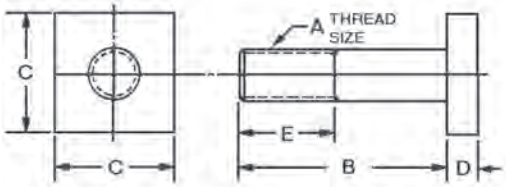

- Material: Alloy Steel
- Finish: Black Oxide
- Heat Treat: Rc 34-38
- Thread: 2A-UNC
- Available in lengths up to 24"

Part Number	Thread Size A	B	C	D	E	Wt. (lbs)
42101	3/8-16	1 1/2	11/16	1/4	3/4	.07
42102	3/8-16	2	11/16	1/4	1 1/4	.08
42103	3/8-16	2 1/2	11/16	1/4	1 1/4	.09
42104	3/8-16	3	11/16	1/4	1 1/2	.11
42105	3/8-16	3 1/2	11/16	1/4	1 1/2	.12
42106	3/8-16	4	11/16	1/4	1 1/2	.14
42301	1/2-13	1 1/2	7/8	1/4	3/4	.12
42302	1/2-13	2	7/8	1/4	1 1/4	.14
42303	1/2-13	2 1/2	7/8	1/4	1 1/4	.17
42304	1/2-13	3	7/8	1/4	1 1/2	.20
42305	1/2-13	3 1/2	7/8	1/4	1 1/2	.22
42306	1/2-13	4	7/8	1/4	2	.25
42307	1/2-13	4 1/2	7/8	1/4	2	.27
42308	1/2-13	5	7/8	1/4	2	.30
42309	1/2-13	5 1/2	7/8	1/4	2	.33
42310	1/2-13	6	7/8	1/4	2	.36
42502	5/8-11	2	1 1/8	3/8	1 1/4	.28
42503	5/8-11	2 1/2	1 1/8	3/8	1 1/4	.33
42504	5/8-11	3	1 1/8	3/8	1 1/2	.37
42505	5/8-11	3 1/2	1 1/8	3/8	1 1/2	.41
42506	5/8-11	4	1 1/8	3/8	1 1/2	.44
42507	5/8-11	5	1 1/8	3/8	1 1/2	.53
42508	5/8-11	6	1 1/8	3/8	1 1/2	.61
42509	5/8-11	8	1 1/8	3/8	3	.78
42510	5/8-11	10	1 1/8	3/8	3	.97
42511	5/8-11	12	1 1/8	3/8	3	1.13

Part Number	Thread Size A	B	C	D	E	Wt. (lbs)
42701	3/4-10	2 1/2	1 1/4	1/2	1 1/4	.48
42702	3/4-10	3	1 1/4	1/2	1 1/2	.55
42703	3/4-10	3 1/2	1 1/4	1/2	1 1/2	.61
42704	3/4-10	4	1 1/4	1/2	1 1/2	.66
42705	3/4-10	5	1 1/4	1/2	1 1/2	.78
42706	3/4-10	6	1 1/4	1/2	1 1/2	.90
42707	3/4-10	8	1 1/4	1/2	3	1.17
42708	3/4-10	10	1 1/4	1/2	3	1.38
42709	3/4-10	12	1 1/4	1/2	3	1.62
42901	1-8	4	1 11/16	11/16	2 1/2	1.25
42902	1-8	5	1 11/16	11/16	2 1/2	1.50
42903	1-8	6	1 11/16	11/16	2 1/2	1.75
42911	1-8	7	1 11/16	11/16	2 1/2	1.88
42904	1-8	8	1 11/16	11/16	3	2.00
42912	1-8	9	1 11/16	11/16	3	2.25
42905	1-8	10	1 11/16	11/16	3	2.50
42906	1-8	12	1 11/16	11/16	3	3.00
42907	1-8	14	1 11/16	11/16	3	3.50
43003	1 1/4-7	8	1 7/8	7/8	5	3.65
43004	1 1/4-7	9	1 7/8	7/8	5	4.00
43005	1 1/4-7	10	1 7/8	7/8	5	4.35
43006	1 1/4-7	12	1 7/8	7/8	5	5.05
43007	1 1/4-7	14	1 7/8	7/8	5	5.75
43008	1 1/4-7	16	1 7/8	7/8	5	6.45
43009	1 1/4-7	18	1 7/8	7/8	5	7.15
43011	1 1/4-7	22	1 7/8	7/8	5	8.20
43012	1 1/4-7	24	1 7/8	7/8	5	9.25

Dovetail Bolts

Dovetail Bolts can be used for clamping guide members on the front of press brakes.

- Material: Alloy Steel
- Finish: Black Oxide
- Heat Treat: Rc 34-38
- Thread: 2A-UNC

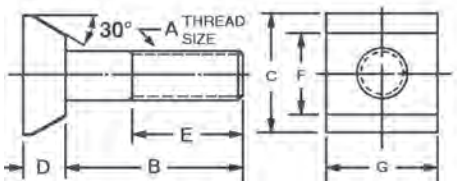

Part Number	Thread Size A	B	C	D	E	F	G	Wt. (lbs) 10 Pcs.
17901	5/8-11	1 1/4	1 1/16	3/8	3/4	3/4	1 1/8	2.00
17902	5/8-11	2	1 1/16	3/8	1 1/8	3/4	1 1/8	2.30
17903	5/8-11	2 3/4	1 1/16	3/8	1 1/2	3/4	1 1/8	3.10
17904	5/8-11	3 3/4	1 1/16	3/8	1 1/2	3/4	1 1/8	5.15
17905	5/8-11	4 1/2	1 1/16	3/8	3/4	3/4	1 1/8	6.10

Flange Nuts

Where heavy clamping pressures and vibrations could cause trouble, the wide face surface of the flange nut holds through with greater friction.

- Material: Low Carbon Steel
- Finish: Black Oxide
- Heat Treat: Case Hardened
- Thread: 2B-UNC

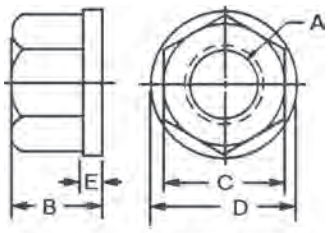

- Material: 303 Stainless Steel

Carbon Steel

Coarse Pitch		Fine Pitch						Wt. (lbs) 10 Pcs.
Part Number	A	Part Number	A	B	C	D	E	
19901	10-24	-	-	5/16	3/8	1/2	7/64	0.15
19902*	1/4-20	**20101**	1/4-28	5/16	1/2	5/8	7/64	0.15
19903*	5/16-18	**20102**	5/16-24	3/8	9/16	3/4	7/64	0.19
19904*	3/8-16	**20103**	3/8-24	1/2	11/16	7/8	1/8	0.51
19905*	7/16-14	**20104**	7/16-20	9/16	3/4	15/16	1/8	0.62
19906*	1/2-13	**20105**	1/2-20	11/16	7/8	1 1/8	5/32	1.10
19907*	5/8-11	**20106**	5/8-18	13/16	1 1/16	1 3/8	3/16	1.75
19908*	3/4-10	**20107**	3/4-16	1	1 1/4	1 5/8	1/4	3.20
19909*	7/8-9	**20108**	7/8-14	1 1/8	1 7/16	1 3/4	1/4	4.20
19910*	1-8	**20109**	1-14	1 1/4	1 5/8	2	1/4	6.00
19911	1 1/8-7	**20110**	1 1/8-12	1 3/8	1 13/16	2 1/4	1/4	8.00
19912	1 1/4-7	**20111**	1 1/4-12	1 3/8	1 13/16	2 1/4	1/4	7.60
19913	1 1/2-6	**20112**	1 1/2-12	1 1/2	2 3/16	2 3/4	1/4	11.90

*Conforms to TCMA

Stainless Steel

Part Number	A	B	C	D	E	Wt. (lbs) 10 Pcs.
20002	1/4-20	5/16	1/2	5/8	3/32	.15
20003	5/16-18	3/8	9/16	3/4	3/32	.19
20004	3/8-16	1/2	11/16	7/8	1/8	.51
20006	1/2-13	11/16	7/8	1 1/8	5/32	1.10
20007	5/8-11	13/16	1 1/16	1 3/8	3/16	1.75
20008	3/4-10	1	1 1/4	1 5/8	1/4	3.20

Flange Nuts
Metric

- Material: Low Carbon Steel
- Finish: Black Oxide
- Heat Treat: Case Hardened
- Thread: Class 6h

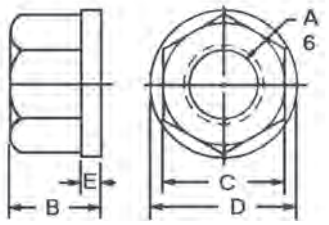

Part Number	Thread A	B	C	D	E	Wt. (kg) 10 pcs.
19952	M6 x 1.0	8	10	16	2	.07
19953	M8 x 1.25	10	13	19	2	.09
19954	M10 x 1.5	13	17	22	3	.23
19955	M12 x 1.75	17	19	25	5	.50
19957	M16 x 2.0	21	24	32	5	.79
19959	M20 x 2.5	25	30	38	6	1.45

Spherical Flange Assemblies

Same advantages as Spherical Washers but with the addition of a nut to replace the top section of the washers. Convex bottom of nut nests into the concave bottom section for full floating action.

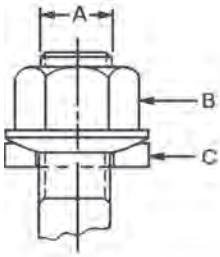

- Material: Low Carbon Steel
- Finish: Black Oxide
- Heat Treat: Case Hardened

Part Number	A	Nut P/N B	Washer P/N C	Wt. (lbs) 10 Pcs.
39301	10-24	**39701**	**41301**	.12
39302	1/4-20	**39702**	**41302**	.16
39303	5/16-18	**39703**	**41303**	.31
39304	3/8-16	**39704**	**41304**	.65
39305	1/2-13	**39705**	**41305**	1.45
39306	5/8-11	**39706**	**41306**	2.44
39307	3/4-10	**39707**	**41307**	4.10
39308	7/8-9	**39708**	**41308**	6.00
39309	1-8	**39709**	**41309**	8.10
39311	1 1/4-7	**39711**	**41311**	13.40
39312	1 1/2-6	**39712**	**41312**	15.70

Spherical Flange Assemblies

Metric

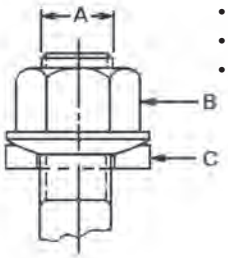

- Material: Low Carbon Steel
- Finish: Black Oxide
- Heat Treat: Case Hardened

Part Number	A	Across Flats B	Washer P/N C	Wt. (kg) 10 pcs.
39352	M6 x 1.0	10	**41302**	.07
39353	M8 x 1.25	13	**41303**	.14
39354	M10 x 1.5	17	**41304**	.30
39355	M12 x 1.75	19	**41305**	.66
39356	M16 x 2.0	24	**41306**	1.10
39357	M20 x 2.5	30	**41357**	1.80

Heavy Duty Hex Nuts

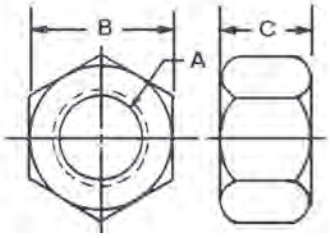

- Finish: Black Oxide
- Grade 8, Hardness HRC of 28-38

Part Number	A	B	C	Wt. (lbs) 100 Pcs.
20711	1/4-20	7/16	7/32	.74
20712	5/16-18	1/2	17/64	1.10
20713	3/8-16	9/16	21/64	1.60
20714	1/2-13	3/4	7/16	3.75
20716	5/8-11	15/16	35/64	7.33
20717	3/4-10	1 1/8	41/64	11.90
20718	7/8-9	1 5/16	3/4	19.00
20719	1-8	1 1/2	55/64	28.30

Stainless Steel Hex Head Equalizing Nuts

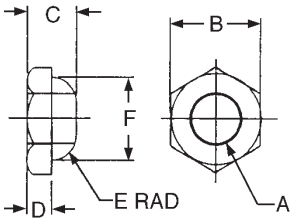

- Material: 303 Stainless

Part Number	A	B	C	D	E	F
12311	10-32	7/16	5/16	5/32	1/8	3/8
12312	1/4-20	1/2	5/16	5/32	1/8	7/16
12313	5/16-18	9/16	5/16	5/32	1/8	1/2
12314	3/8-16	11/16	3/8	3/16	3/16	5/8

Spherical Flange Nuts

- Material: Low Carbon Steel
- Finish: Black Oxide
- Heat Treat: Case Hardened
- Thread: 2B-UNC, Class 6h

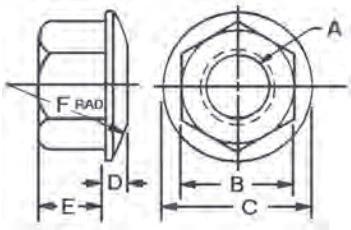

Part Number	A	B	C	D	E	F	Wt. (lbs) 10 Pcs.
39701	10-24	3/8	1/2	3/32	1/4	3/4	.10
39702*	1/4-20	1/2	5/8	3/32	1/4	1	.12
39703*	5/16-18	9/16	3/4	1/8	9/32	1	.21
39704*	3/8-16	11/16	7/8	1/8	13/32	1 1/2	.50
39705*	1/2-13	7/8	1 1/8	3/16	1/2	2	1.00
39706*	5/8-11	1 1/16	1 3/8	7/32	5/8	2 1/4	1.82
39707*	3/4-10	1 1/4	1 5/8	1/4	3/4	2 1/2	3.10
39708*	7/8-9	1 7/16	1 3/4	1/4	7/8	2 1/2	4.35
39709*	1-8	1 5/8	2	1/4	1	3 1/2	5.90
39711	1 1/4-7	1 13/16	2 1/4	5/16	1 1/16	4	7.20
39712	1 1/2-6	2 3/16	2 3/4	5/16	1 3/16	4 1/2	11.60

*Conforms to TCMA.

Part Number	A	B	C	D	E	F	Wt. (kg) 10 pcs.
39752	M6 x1.0	10	16	2	6	25	.05
39753	M8 x 1.25	13	19	3	7	25	.10
39754	M10 x 1.5	17	22	4	10	38	.23
39755	M12 x 1.75	19	25	5	13	51	.50
39756	M16 x 2.0	24	32	6	16	57	.83
39757	M20 x 2.5	30	38	6	19	64	1.41

Spinner-Grip™ Flange Lock Nuts

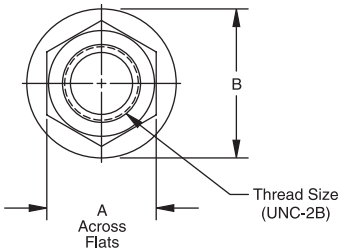

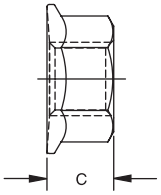

- Free spinning installation eliminates the need to wrench the nut down the fastener.
- Locks to the part, not to the threads.
- Grade 8 strength and quality, and will work with any grade fastener.
- Hardness of 28 – 38 HRC: more effective at maintaining clamp load under vibration.
- Greater temperature range than nylon insert locknuts, and will not be effected by humidity.
- Flat washers are not needed, unless in a slotted application.
- Spinner-Grips™ are not limited to 5 reuses, unlike most prevailing torque lock nuts.
- Jergens maintains inventory of Zinc plated product, as well as plain finished (un-plated) product so you can specify your plating of choice.
  (Please allow 2 – 3 weeks lead time for plating.)

Part Number						
Plain Finish	Zinc Plated	Stainless Steel	Thread Size	A	B	C
19800	**19820**	**19880**	1/4-20	7/16	19/32	1/4
19801	**19821**	**19881**	5/16-18	1/2	11/16	9/32
19802	**19822**	**19882**	3/8-16	9/16	3/4	11/32
19803	**19823**	**19883**	7/16-14	11/16	15/16	3/8
19804	**19824**	**19884**	1/2-13	3/4	1	7/16
19805	**19825**	**19885**	5/8-11	15/16	1 1/4	9/16
19806	**19826**	**19886**	3/4-10	1 1/4	1 1/2	11/16
Metric						
19807	**19827**	**19887**	M6-1.00	10	15.1	6.0
19808	**19828**	**19888**	M8-1.25	13	19.0	8.8
19809	**19829**	**19889**	M10-1.50	15	24.1	10.0
19810	**19830**	**19890**	M12-1.75	19	25.5	11.6
19811	**19831**	**19891**	M16-2.00	24	38.0	17.2

Note: Additional charges apply to plated product.
Charges vary by plating type.

Coupling Nuts

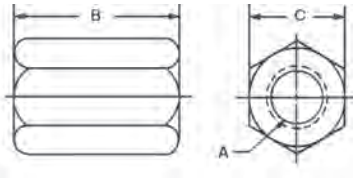

- Material: Low Carbon Steel
- Finish: Black Oxide
- Heat Treat: Case Hardened
- Thread: 2B-UNC

Part Number	A	B	C	Wt. (lbs) 10 Pcs.
18711*	3/8-16	1	11/16	.94
18712*	1/2-13	1 1/4	7/8	2.00
18713*	5/8-11	1 5/8	1 1/16	3.40
18714*	3/4-10	1 7/8	1 1/4	5.65
18715	7/8-9	2 1/4	1 7/16	8.60
18716	1-8	2 1/2	1 5/8	12.50

*Conforms to TCMA.

Metric

Part Number	A	B	C	Wt. (kg) 10 Pcs.
18761	M10	25	16	.05
18762	M12	32	19	.81
18763	M16	41	24	1.55
18764	M20	51	27	2.6

Knurled Lock Nuts

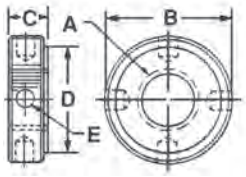

Most convenient for quick thread locking on your jig and fixture work. Straight knurled radius provides sure, non-slip finger grip in oily conditions. Faces are square with threads which assures a large locking surface.

- Material: Low Carbon Steel
- Finish: Black Oxide
- Heat Treat: Case Hardened
- Thread: 2B-UNC

Part Number	A	B	C	D	E	Wt. (lbs) 10 Pcs.
28101	3/8-16	1	3/8	3/4	.188	.62
28102	1/2-13	1 1/4	7/16	1	.257	1.10
28103	5/8-11	1 3/8	7/16	1 1/8	.257	1.10
28104	3/4-10	1 3/4	9/16	1 1/2	.316	2.50
28105	1-8	2	9/16	1 3/4	.316	3.10

Check Nuts

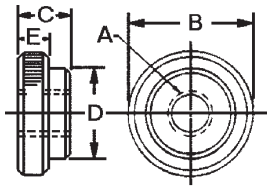

Multi-use Locknut for hand tightening applications

- Material: Low Carbon Steel
- Finish: Black Oxide
- Heat Treat: Case Hardened
- Thread: 2B-UNC

Part Number	A	B	C	D	E	Wt. (lbs) 10 Pcs.
16901	10-24	3/4	7/32	1/2	5/32	.15
16902	1/4-20	3/4	7/32	1/2	5/32	.15
16903	5/16-18	3/4	5/16	1/2	1/4	.21
16904	3/8-16	3/4	5/16	1/2	1/4	.21
16905	1/2-13	1	3/8	3/4	1/4	.47

Acorn Nuts

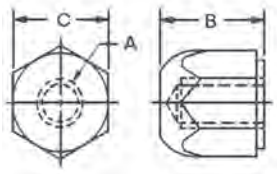

Acorn nuts are used to cover threaded ends to protect them from dirt, grit or damage to the thread.

Part Number	A	B	C	Wt. (lbs) 10 Pcs.
10501	5/16-18	5/8	5/8	.44
10502	3/8-16	3/4	3/4	.78
10503	1/2-13	15/16	7/8	1.25
10504	5/8-11	1 3/16	1 1/16	2.35

- Material: Low Carbon Steel
- Finish: Black Oxide
- Heat Treat: Case Hardened
- Thread: 2B-UNC

Stainless Steel Nuts

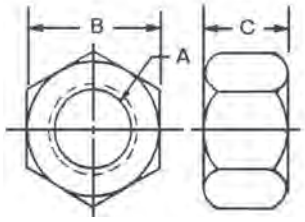

- Material: 300 Series Stainless Steel

Part Number	A	B	C
12321	10-32	3/8	1/8
12322	1/4-20	7/16	3/16
12323	5/16-18	1/2	9/32
12324	3/8-16	9/16	11/32

Stainless Steel Knurled Equalizing Nuts

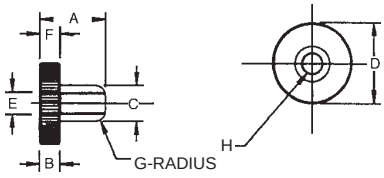

For use with stainless steel equalizing "C" washer. See page 266.

Part Number	A	B	C	D	E	F	G	H
12301	3/4	3/16	3/8	3/4	13/64	1/4	1/8	10-32
12302	13/16	1/4	7/16	1	17/64	1/4	1/8	1/4-20

T-Slot Nuts

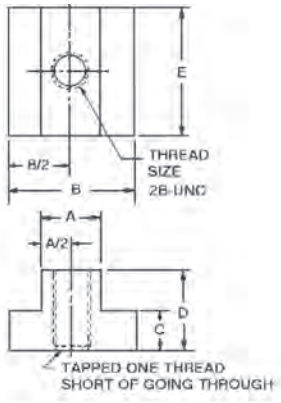

- Material: Low Carbon Steel, 303 Stainless
- Finish: Black Oxide
- Threads: 2B-UNC (Inch); Class 6h (Metric)
- Heat Treat: Case Hardened
- Available in metric sizes. See below.

Part Number	Thread	T-slot Width A	B	C	D	E	Wt. (lbs) 10 Pcs.
*43302**	3/8-16	7/16	11/16	7/32	1/2	7/8	0.50
*43303**	3/8-16	1/2	7/8	9/32	1/2	7/8	.070
43301	3/8-16	9/16	7/8	1/4	1/2	7/8	0.70
*43305**	1/2-13	9/16	7/8	11/32	5/8	1 1/8	1.20
*43306	1/2-13	5/8	1	11/32	5/8	1 1/8	1.50
*43304	1/2-13	11/16	1 1/8	7/16	3/4	1 1/4	2.10
*43308**	5/8-11	11/16	1 1/8	7/16	3/4	1 1/4	1.14
*43309	5/8-11	3/4	1 1/4	15/32	3/4	1 1/4	1.60
*43307	5/8-11	13/16	1 1/4	9/16	1	1 1/2	3.11
*43311**	3/4-10	13/16	1 1/4	9/16	1	1 1/2	3.60
43312	3/4-10	7/8	1 1/2	9/16	1	1 1/2	4.10
*43310	3/4-10	1 1/16	1 5/8	1 1/16	1 1/4	2	7.20
43313**	7/8-9	1	1 5/8	5/8	1 1/4	2	7.30
43314	7/8-9	1 1/16	1 3/4	5/8	1 1/4	2	8.00

*Conforms to TCMA.
**Not Hardened

Jergens Feature:

Jergens Table-Saver design provides a safety-stop feature to prevent turning stud into tableways.

Metric

Part Number	Thread	T-slot Width A	B	C	D	E	Material
43372	M10x1.5	12	19	7	13	25	Steel
43373	M10x1.5	14	22	9	16	29	Steel
43374	M10x1.5	16	25	9	16	29	Steel
43375	M12x1.75	14	22	9	16	29	Steel
43376	M12x1.75	16	25	9	16	29	Steel
43377	M12x1.75	18	29	11	19	32	Steel
43378	M16x2.0	18	29	11	19	32	Steel
43379	M16x2.0	20	32	14	25	38	Steel
43380	M16x2.0	22	35	14	25	38	Steel
43381	M20x2.5	22	35	14	25	38	Steel
43382	M20x2.5	24	38	16	25	44	Steel
43383	M20x2.5	28	41	18	29	51	Steel

Stainless Steel

Part Number	Thread	T-slot Width A	B	C	D	E
43402	3/8-16	7/16	3/4	7/32	1/2	1
43403	3/8-16	1/2	7/8	1/4	5/8	7/8
43405	1/2-13	9/16	7/8	5/16	3/4	1 1/4
43406	1/2-13	5/8	1	3/8	3/4	1 1/4
43408	5/8-11	11/16	1 1/4	15/32	1	1 1/2
43409	5/8-11	3/4	1 1/4	17/32	1 1/4	1 1/2
43411	3/4-10	13/16	1 1/2	9/16	1	1 3/4
43410	3/4-10	1 1/16	1 5/8	9/16	1	1 3/4

Kwik-Turn T-Slot Nuts

- 1/4 turn design allows the Kwik-Turn to be installed from the top of the T-Slot, in order to avoid uninstallation of set-ups when additional nuts and studs are required
- Material: Low Carbon Steel,
- Finish: Black Oxide
- Threads: 2B-UNC (Inch)
- Heat Treat: Case Hardened

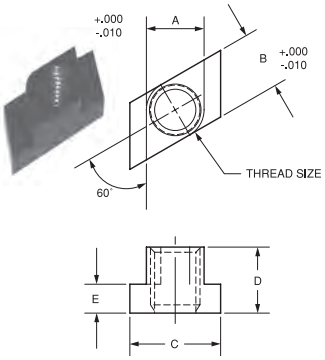

Part Number	Thread	T-Slot	A	B	C	D	E	Wt. (lbs) 10 pcs
43332**	3/8-16	7/16	.432	.432	11/16	1/2	7/32	0.27
43333	3/8-16	1/2	.495	.495	7/8	1/2	9/32	0.45
43334**	1/2-13	11/16	.683	.683	1-1/8	3/4	7/16	0.58
43335	1/2-13	9/16	.562	.562	7/8	5/8	11/32	0.79
43336	1/2-13	5/8	.620	.620	1	5/8	11/32	1.26
43338**	5/8-11	11/16	.683	.683	1-1/8	3/4	7/16	1.08
43339	5/8-11	3/4	.745	.745	1-1/4	3/4	15/32	1.44
43345	3/4-10	1	.995	.995	1-5/8	1	5/8	3.50

**Not Hardened

Jergens Feature:

Jergens Table-Saver design provides a safety-stop feature to prevent turning stud into tableways.

Flat Washers

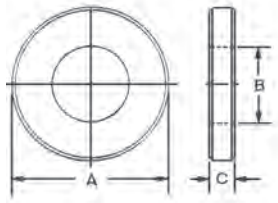

- Material: Cold Rolled Low Carbon Steel, 303 Stainless
- Finish: Black Oxide
- Heat Treat: Carbon Nitride to 60
- Flat and parallel within .005

Part Number	A	B	C	Bolt Size	Wt. (lbs) 10 Pcs.
31901	1/2	13/64	3/32	3/16	.04
31902*	5/8	9/32	1/8	1/4	.05
31903*	3/4	11/32	1/8	5/16	.10
31904*	7/8	13/32	1/8	3/8	.21
31905*	1 1/8	17/32	1/8	1/2	.42
31906*	1 3/8	21/32	1/8	5/8	.63
31907*	1 5/8	25/32	5/32	3/4	1.10
31908*	1 3/4	29/32	5/32	7/8	1.20
31909*	2	1 1/32	3/16	1	1.70
31910	2 1/2	1 9/32	9/32	1 1/4	2.20

*Conforms to TCMA

Stainless Steel

Part Number	A	B	C	Bolt Size
32001	7/16	.196	5/64	3/16
32002	5/8	17/64	3/32	1/4
32003	11/16	11/32	1/8	5/16
32004	7/8	25/64	1/8	3/8
32005	1 1/8	17/32	1/8	1/2
32006	1 1/4	21/32	1/8	5/8
32007	1 1/2	25/32	5/32	3/4

Heavy Duty Flat Washers

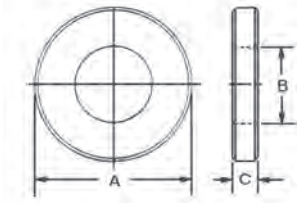

Jergens Feature:

Made from high-carbon through- hardened steel which makes them up to 50% stronger than standard heavy duty washers. Also more fracture resistant under heavy loads.

- Material: High Carbon Steel
- Finish: Black Oxide
- Heat Treat: Rc 40-45 (Through Hardened)
- Flat & Parallel within .005 (.01mm)

Part Number	A	B	C	Bolt Size	Wt. (lbs) 10 Pcs.
31967	5/8	9/32	3/16	1/4	0.72
31968	3/4	11/32	3/16	5/16	0.79
31969	7/8	13/32	3/16	3/8	0.87
31960	1 1/2	17/32	7/32	1/2	1.00
31961	1 1/2	21/32	7/32	5/8	0.88
31962	1 7/8	25/32	1/4	3/4	1.61
31963	2 1/8	29/32	1/4	7/8	2.31
31964	2 1/2	1 1/16	1/4	1	3.56
31965	2 1/2	1 5/16	1/4	1 1/4	3.98
31966	2 3/4	1 9/16	1/4	1 1/2	4.20

Metric Dimensions

Part Number	A	B	C	Bolt Size	Wt. (kg) 10 Pcs.
31961	38	17	5.5	16	0.40
31962	48	20	6.5	18	0.73
31963	54	23	6.5	20	1.05
31964	64	27	6.5	24	1.62

Washers
"C" Washers

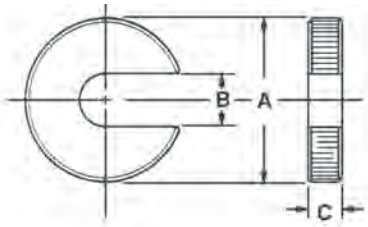

The "C" Washers are ground parallel on both surfaces with a knurled O.D.

- Material: Low Carbon Steel
- Finish: Black Oxide
- Heat Treat: Case Hardened
- Faces: Ground Parallel

Part Number	A	B	C	Wt. (lbs)
17701*	3/4	9/32	1/4	.02
17702*	1	9/32	1/4	.04
17703*	1 1/4	9/32	1/4	.07
17704*	1 1/4	13/32	3/8	.09
17705*	1 1/2	13/32	3/8	.14
17706*	1 3/4	13/32	3/8	.20
17707*	1 7/8	17/32	3/8	.17
17708*	2 1/4	17/32	3/8	.35
17709*	2 1/8	21/32	3/8	.32
17710	2 1/2	21/32	3/8	.53
17711*	2 1/2	25/32	7/16	.55

*Conforms to TCMA

Equalizing Swing "C" Washer
Stainless Steel

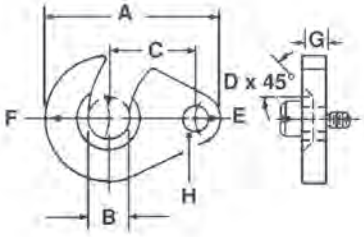

Part Number	A	B	C	D	Radius E	Radius F	+.0000 -.0015 G	+.0005 -.0000 H
12341	1 1/8	13/64	9/16	5/64	3/16	3/8	.1870	.1875
12342	1 1/4	17/64	5/8	3/32	3/16	7/16	.1870	.1875
12343	1 1/2	21/64	3/4	1/8	1/4	1/2	.2495	.250
12344	1 3/4	25/64	7/8	1/8	1/4	5/8	.2495	.250

- Material: 303 Stainless

Equalizing "C" Washers
Stainless Steel

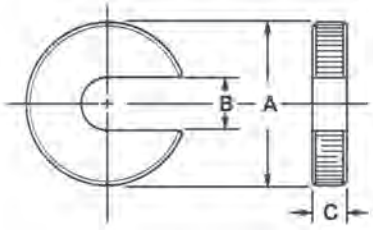

Part Number	A	B	C	Wt. lbs
12331	3/4	7/32	3/16	.02
12332	7/8	9/32	3/16	.04
12333	1	11/32	1/4	.04
12334	1 1/4	13/32	5/16	.04

- Material: 303 Stainless

Washers

Swing "C" Washer Assembly

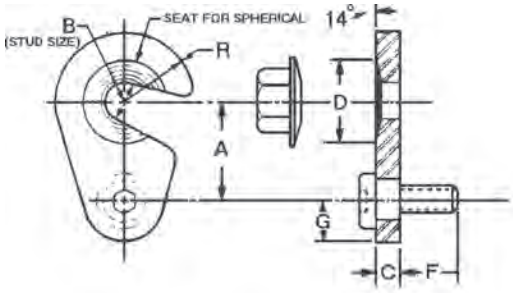

The Swing "C" Washer has a concave center for self-locating around the stud, which prevents creeping while tightening, and allows acceptance of the mating spherical flange nuts. The Spherical Flange Nut assures that the washer cannot back out either during clamping or due to vibration during the operation. The shoulder screw has a nylon lock to prevent loosening of the screw during operation.

- Material: Low Carbon Steel
- Finish: Black Oxide
- Heat Treat: Case Hardened

Part Number	A	Stud Size B	C	D	E	F	G	R	Part Number: Shoulder Screw	Part Number: Spherical Flange Nut	Wt. (lbs)
37301*	1	3/8	1/4	13/16	5/16-18	1/2	3/8	3/4	**41707**	**39704**	.12
37302	1 1/4	1/2	3/8	1 1/8	5/16-18	1/2	1/2	1	**41708**	**39705**	.30
37303*	1 1/2	5/8	3/8	1 5/16	3/8-16	5/8	9/16	1 1/8	**41713**	**39706**	.39
37304*	1 3/4	3/4	1/2	1 9/16	3/8-16	5/8	5/8	1 1/4	**41714**	**39707**	.72

*Conforms to TCMA

Heavy Duty Square Washers

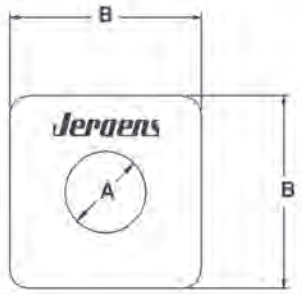

- Material: Low Carbon Steel
- Finish: Black Oxide
- Heat Treat: Case Hardened

Part Number	±.010 A	±.010 B	Bolt Size	Thickness
31920	11/32	1 3/8	5/16	3/16
31921	13/32	1 3/8	3/8	3/16
31932	17/32	1 3/8	1/2	1/4
31933	17/32	2	1/2	1/4
31934	21/32	2	5/8	1/4
31935	13/16	2	3/4	1/4
31922	15/16	2	7/8	1/4
31936	13/16	2 1/2	3/4	1/4
31923	15/16	2 1/2	7/8	1/4
31937	1 1/16	2 1/2	1	1/4
31924	13/16	3	3/4	5/16
31925	15/16	3	7/8	5/16
31926	1 1/16	3	1	5/16
31927	1 1/16	3	1	3/8
31928	1 5/16	3	1 1/4	3/8
31929	1 9/16	3	1 1/2	3/8

Washers
Self Aligning Washers (Two-Piece)

Upper

Lower

These washers are ideally suited for joining machine sections which are out of parallel. They adjust themselves for a positive, firm base. With radius "E" and the angular 14° combination, line contact is formed around the two mating washer surfaces, allowing the two washers the ability to seek misalignment in the companion clamping members. The heat treated I.D. of the bottom concave piece is larger than the I.D. of the top convex section for free action. It is precision ground and the sharp edges are removed.

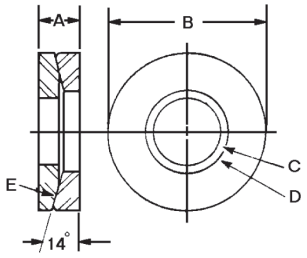

Part Number	A	B	C	D	E	Bolt Size	Wt. (lbs)	Part Number Upper	Part Number Lower
41101	3/16	1/2	13/64	15/64	3/4	3/16	.01	**41501**	**41301**
41102	3/16	5/8	17/64	19/64	1	1/4	.01	**41502**	**41302**
41103	7/32	3/4	11/32	23/64	1	5/16	.01	**41503**	**41303**
41104	7/32	7/8	13/32	15/32	1 1/2	3/8	.03	**41504**	**41304**
41105	9/32	1 1/8	17/32	19/32	2	1/2	.08	**41505**	**41305**
41106	3/8	1 3/8	21/32	23/32	2 1/4	5/8	.13	**41506**	**41306**
41107	13/32	1 5/8	25/32	27/32	2 1/2	3/4	.20	**41507**	**41307**
41108	17/32	1 3/4	29/32	31/32	2 1/2	7/8	.33	**41508**	**41308**
41109	9/16	2	1 1/32	1 3/32	3 1/2	1	.41	**41509**	**41309**
41110	5/8	2 1/4	1 5/32	1 7/32	3 1/2	1 1/8	.77	**41510**	**41310**
41111	5/8	2 1/4	1 9/32	1 11/32	4	1 1/4	.62	**41511**	**41311**
41112	11/16	2 3/4	1 17/32	1 19/32	4 1/2	1 1/2	.85	**41512**	**41312**

- Material: Low Carbon Steel
- Finish: Black Oxide
- Heat Treat: Case Hardened

Metric Two-Piece Assemblies

Part Number	A	B	C	D	E	Bolt Size	Wt. (kg)	Part Number Upper	Part Number Lower
41102	5	16	6.5	7.5	25	M6	.01	**41502**	**41302**
41103	5.5	19	8.5	9	25	M8	.01	**41503**	**41303**
41104	5.5	22	10.5	12	38	M10	.01	**41504**	**41304**
41105	7	28	13.5	15	51	M12	.03	**41505**	**41305**
41106	9.5	35	17	18	57	M16	.06	**41506**	**41306**
41157	10.5	41	21	21.5	63.5	M20	.09	**41557**	**41357**

Single Units

Self Aligning Washers (Two-Piece)
Stainless Steel

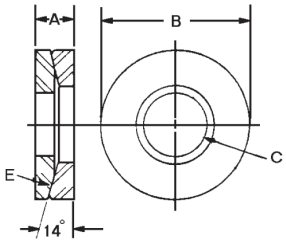

- Material: 303 Stainless

Part Number	A	B	C	E	Bolt Size	Wt. (lbs)
41202	3/16	5/8	9/32	3/4	1/4	.01
41203	1/4	3/4	11/32	1	5/16	.01
41204	1/4	7/8	13/32	1 1/4	3/8	.03
41205	5/16	1 1/8	17/32	1 1/2	1/2	.08
41206	5/16	1 3/8	21/32	1 3/4	5/8	.13
41207	3/8	1 5/8	25/32	2 1/4	3/4	.20

USAE™ Heavy Duty Flat Washers

USS + SAE = USAE

What is a USAE™ Washer?

- It is a simple but effective idea that is long overdue.
- The Outside Diameter conforms to USS standards. This provides a washer that is up to 36% larger than standard hardened washers.

More Contact Area = More Holding Power

- The Inside Diameter conforms to SAE standards. The small ID provides a more precise fit on bolts, studs, etc.
- USAE Washers are also up to 37% thicker than standard hardened washers for greater strength.
- Washers are made from mild steel. They are case hardened to 60 HRc and have a black oxide finish.
- Bolt size is stamped on each washer for easy identification.

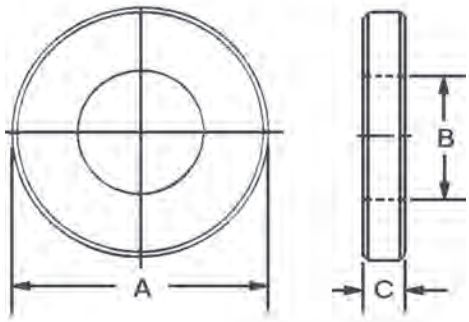

USAE™ Heavy Duty Flat Washers

Part No.	Bolt Size	A (OD)	B (ID)	C (Thickness)
FW00001	1/4	3/4	9/32	9/64
FW00002	5/16	7/8	11/32	9/64
FW00003	3/8	1	13/32	9/64
FW00004	1/2	1-3/8	17/32	5/32
FW00005	5/8	1-3/4	21/32	5/32
FW00006	3/4	2	13/16	1/4
FW00007	1	2-1/2	1-1/16	1/4

*Tolerances for all dimensions are +/- .010"

Replaceable Grippers
Tapered – Hardened Steel

Pointed

Fine Serrated

Jergens introduces a new concept in replaceable grippers. It is now easier to modify soft top jaws, strap clamps, or fixtures to hold irregularly shaped material. The grippers can be installed from one side, using a combination center drill, a tap, and a box wrench. There is no need to drill through holes from difficult to reach locations. Simply drill, tap, and install.

- Material: 8620
- Finish: Black Oxide
- Heat Treat: Case Hardened
- Available in FixturePro™ Design Software

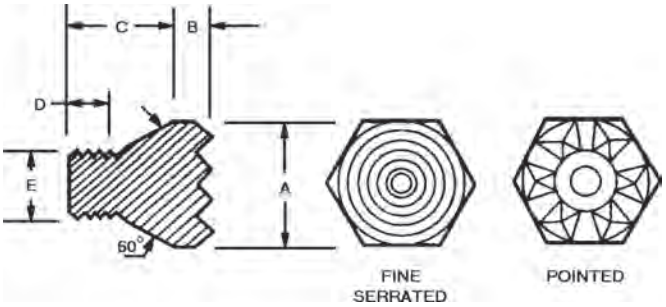

Hardened Steel Grippers

Part Number		Hex				Thread	Center	Drill To
Serrated	Pointed	A	B	C	D	E	Drill	Diameter
23801	**23811**	5/16	.093	.32	.19	8-32	No. 4	.310
23802	**23812**	1/2	.125	.46	.25	1/4-28	No. 6	.498
23803	**23813**	3/4	.187	.70	.38	3/8-16	No. 8	.745

Tapered – Carbide Tipped

- Material: Body 8620
  Insert, Carbide
- Finish: Zinc Plate
- Available in FixturePro™ Design Software

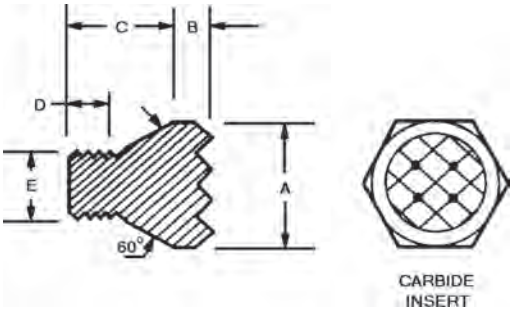

Carbide Tipped Grippers

Part Number	Hex A	B	C	D	Thread E	Center Drill	Drill To Diameter
23822	1/2	.125	.46	.25	1/4-28	No. 6	.498
23823	3/4	.187	.70	.38	3/8-16	No. 8	.745

Replaceable Grippers

The Jergens Replaceable Grippers are available in Hardened High Speed Tool Steel or with Carbide Inserts. The points of the grippers embed themselves into the work piece giving greater holding power with less actual pressure. Jergens Grippers may be held in place using either a set screw on the flat of the gripper or the threaded hole in the back of the gripper.

Use Jergens Grippers to make hardened serrated jaws from Jergens soft top jaws or add the grippers to Jergens strap clamps for extra holding power. Use Jergens replaceable grippers anywhere that rough surfaces are being held in position for machining.

ROUND GRIPPERS

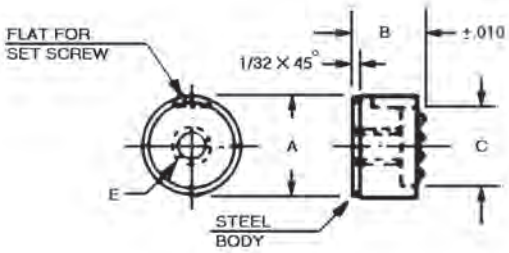

SQUARE GRIPPERS

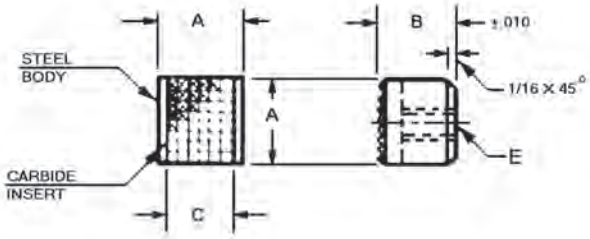

- Material: Body, Low Carbon Steel
  Insert, Carbide
- Finish: Zinc Plate
- Serrations: .09" x 90°
- Available in FixturePro™ Design Software

Carbide Tipped Grippers

Part Number	Style	A	B	C	E	Wt. (lbs) 10 Pcs.
23708	Round	3/8	3/8	5/16	10-32 x 7/32	.15
23707	Round	1/2	3/8	3/8	10-32 x 7/32	.20
23702	Round	1/2	1/2	3/8	10-32 x 11/32	.22
23703	Round	1/2	21/32	3/8	10-32 x 7/16	.30
23704	Round	5/8	3/8	1/2	1/4-28 x 7/32	.36
23705	Round	3/4	3/8	5/8	1/4-28 x 7/32	.44
23706	Square	1/2	3/8	13/32	10-32 x 1/4	.30

- Material: High Speed Tool Steel
- Finish: Black Oxide
- Heat Treat: Rc 60-62
- Serrations: .09" x 90°
- Available in FixturePro™ Design Software

Hardened Tool Steel Grippers

Part Number	Style	A	B	C	E	Wt. (lbs) 10 Pcs.
23710	Round	3/8	3/8	3/8	10-32 x 3/8	.15
23711	Round	1/2	3/8	1/2	10-32 x 3/8	.20
23712	Round	1/2	1/2	1/2	10-32 x 1/2	.22
23713	Round	1/2	21/32	1/2	10-32 x .651	.30
23714	Round	5/8	3/8	5/8	1/4-28 x 3/8	.36
23715	Round	3/4	3/8	3/4	1/4-28 x 3/8	.44
23716	Square	1/2	3/8	1/2	10-32 x 3/8	.30

Miniature Straps – Radius

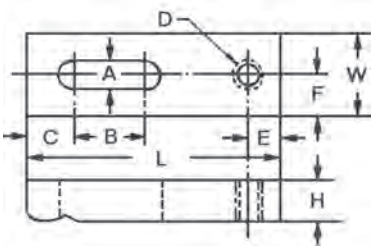

A light-duty strap with a specially designed radius end provides maximum pressure for extreme close-to-the-edge clamping. Features a tapped hole in the rear for knurled head thumb screw and a long slot for lateral adjustment.

- Material: Low Carbon Steel
- Finish: Black Oxide
- Heat Treat: Case Hardened Rockwell 30N Scale 59-69

Part Number	Bolt Size	A	B	C	Thread Size D	E	F	W	H	L	Wt. (lbs) 10 Pcs.
29704	#10 or M5	7/32	7/16	5/16	10-24	3/16	1/4	1/2	1/4	1 1/2	.44
29705	#10 or M5	7/32	9/16	5/16	10-24	3/16	1/4	1/2	1/4	1 3/4	.44
29706	#10 or M5	7/32	11/16	5/16	10-24	3/16	1/4	1/2	1/4	2	.44

Miniature Straps – Flat

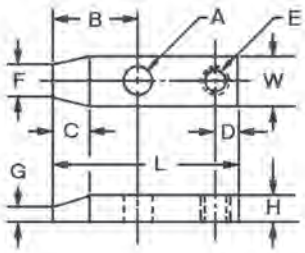

A “chisel nose”, flat strap for light-duty holding where clamping is restricted. Features a tapped hole in back for heel rest and a drilled hole for stud clearance.

- Material: Low Carbon Steel
- Finish: Black Oxide
- Heat Treat: Case Hardened Rockwell 30N Scale 59-69

Part Number	A	B	C	D	Thread Size E	F	G	W	H	L	Wt. (lbs) 10 Pcs.
29701	7/32	5/8	3/8	3/16	10-24	1/4	1/8	1/2	1/4	1 1/2	.47
29702	9/32	7/8	3/8	3/16	10-24	1/4	1/8	1/2	1/4	2	.62
29703	9/32	1 1/8	3/8	3/16	10-24	1/4	1/8	1/2	5/16	2 1/2	.94

Adjustable Clamp Rests
Stainless Steel

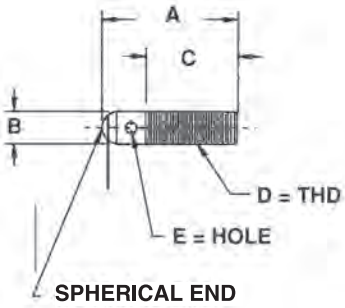

- Material: 303 Stainless

Part Number	A	B	C	D	E
12231	3/4	.190	1/2	10-32	1/16
12232	1 1/4	.190	1	10-32	1/16
12233	1	1/4	11/16	1/4-20	5/64
12234	1 1/2	1/4	1 3/16	1/4-20	5/64
12235	1 3/8	5/16	1 1/8	5/16-18	3/32
12236	1 7/8	5/16	1 5/8	5/16-18	3/32
12237	1 5/8	3/8	1 3/8	3/8-16	1/8
12238	2 1/8	3/8	1 7/8	3/8-16	1/8

Adjustable Clamp Heels

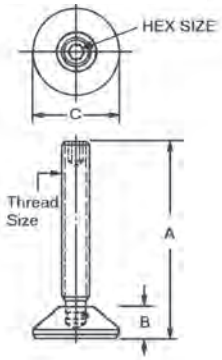

- Material: Stud, Stressproof®
  Pad, Low Carbon Steel
- Finish: Black Oxide
- Thread: 2B-UNC (Inch); 6h (Metric)

Part Number	Thread Size	A	B	C	Hex Key Size	Wt. (lbs)
47213	3/8-16	2	5/8	1 1/4	3/16	.20
47214	3/8-16	3	5/8	1 1/4	3/16	.30
47215	3/8-16	4	5/8	1 1/4	3/16	.40
47201	1/2-13	3	5/8	1 1/2	1/4	.40
47202	1/2-13	4	5/8	1 1/2	1/4	.50
47203	1/2-13	5	5/8	1 1/2	1/4	.60
47204	5/8-11	4	3/4	1 3/4	5/16	.70
47205	5/8-11	5	3/4	1 3/4	5/16	.80
47206	5/8-11	6	3/4	1 3/4	5/16	.90
47207	3/4-10	5	7/8	2	3/8	1.20
47208	3/4-10	6	7/8	2	3/8	1.35
47209	3/4-10	7	7/8	2	3/8	1.50
47210	1-8	4	1	2 1/2	9/16	1.90
47211	1-8	6	1	2 1/2	9/16	2.30

Metric

Part Number	Thread Size	A	B	C	Hex Size	Wt. (kg)
47263	M10 x 1.5	50	16	32	5	.09
47264	M10 x 1.5	75	16	32	5	.11
47265	M10 x 1.5	100	16	32	5	.11
47251	M12 x 1.75	75	16	38	6	.11
47252	M12 x 1.75	100	16	38	6	.13
47253	M12 x 1.75	125	16	38	6	.15
47254	M16 x 2.0	100	19	44	8	.25
47255	M16 x 2.0	125	19	44	8	.29
47256	M16 x 2.0	150	19	44	8	.32
47257	M20 x 2.5	125	22	50	10	.44
47258	M20 x 2.5	150	22	50	10	.46
47259	M20 x 2.5	175	22	50	10	.55
47260	M24 x 3.0	100	25	64	14	.44
47261	M24 x 3.0	150	25	64	14	.50

Plain Straps

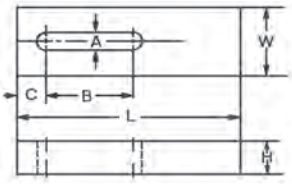

- Material: Low Carbon Steel, 2024 Aluminum

Part Number		Bolt Size	A	B	C	Width		H	L	Wt. (lbs)
Steel	Aluminum					Steel	Aluminum			
33111	**33001**	1/4 or M6	9/32	5/8	3/8	5/8	3/4	3/8	2	.09
33113	—	5/16 or M8	11/32	3/4	9/16	7/8	—	1/2	2 1/2	.18
33114	**33004**	5/16 or M8	11/32	1 1/4	9/16	7/8	1	1/2	3 1/2	.25
33115	—	3/8 or M10	13/32	1 1/8	11/16	1 1/4	—	5/8	3 1/2	.61
33116	**33006**	3/8 or M10	13/32	1 5/8	11/16	1 1/4	1 1/2	5/8	4 1/2	.90
33117	—	1/2 or M12	17/32	1 1/4	7/8	1 1/2	—	3/4	4 1/2	1.12
33118	**33008**	1/2 or M12	17/32	2	7/8	1 1/2	2	3/4	6	1.60
33119	—	5/8 or M16	21/32	1 1/2	1 1/16	1 3/4	—	7/8	5	1.75
33120	—	5/8 or M16	21/32	2 1/2	1 1/16	1 3/4	—	7/8	7	2.60
33121	—	3/4 or M19	25/32	1 1/2	1 1/8	1 3/4	—	1	5	2.00
33122	—	3/4 or M19	25/32	2 1/2	1 1/8	1 3/4	—	1	7	2.90

Padded Straps

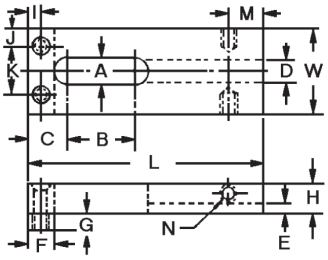

Jergens Feature:

The elongated slot allows for greater clamping force on the part. A steel pad is standard. Plastic or brass pads may be ordered separately for both inch and metric straps. See page 237.

- Material: Low Carbon Steel
- Finish: Low Carbon Steel
- Heat Treat: Case Hardened
  Rockwell 30N Scale 59-69

Part Number	Bolt Size	A	B	C	D	E	F	G	I	J	K	M	N	W	H	L	Wt. (lbs)
37101	1/4 or M6	9/32	5/8	3/8	1/4	1/8	1/4	1/8	9/64	9/64	11/32	—	—	5/8	3/8	2	.09
37103	3/8 or M10	13/32	1 1/8	11/16	3/8	3/16	1/2	1/4	1/4	5/16	5/8	1/2	5/16-18	1 1/4	5/8	3 1/2	.65
37105	3/8 or M10	13/32	1 5/8	11/16	3/8	3/16	1/2	1/4	1/4	5/16	5/8	1/2	5/16-18	1 1/4	5/8	4 1/2	.83
37107*	1/2 or M12	17/32	1 1/4	7/8	3/8	1/4	5/8	3/8	5/16	3/8	3/4	1/2	5/16-18	1 1/2	3/4	4 1/2	1.24
37110*	1/2 or M12	17/32	2	7/8	3/8	1/4	5/8	3/8	5/16	3/8	3/4	1/2	5/16-18	1 1/2	3/4	6	1.63
37111*	5/8 or M16	21/32	1 1/2	1 1/16	3/8	1/4	3/4	1/2	3/8	1/2	3/4	3/4	5/16-18	1 3/4	7/8	5	1.88
37113*	5/8 or M16	21/32	2 1/2	1 1/16	3/8	1/4	3/4	1/2	3/8	1/2	3/4	3/4	5/16-18	1 3/4	7/8	7	2.63
37114*	3/4 or M20	25/32	1 1/2	1 1/8	3/8	1/4	3/4	1/2	3/8	1/2	3/4	3/4	5/16-18	1 3/4	1	5	2.12
37116*	3/4 or M20	25/32	2 1/2	1 1/8	3/8	1/4	3/4	1/2	3/8	1/2	3/4	3/4	5/16-18	1 3/4	1	7	2.88

*Carbide Gripper Kits are available, contact Technical Sales Department for details. Gripper Part #23704.

Padded Straps
Metric

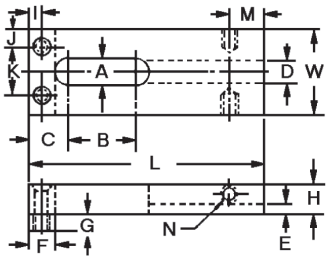

- Material: Low Carbon Steel
- Finish: Low Carbon Steel
- Heat Treat: Case Hardened
  Rockwell 30N Scale 59-69

Metric

Part Number	Bolt Size	A	B	C	D	E	F	G	M	N	W	H	I	J	K	L	Wt (kg)
37151	M6	7	16	10	6	3	6	3	—	—	16	9	4	4	9	50	.04
37153	M8	10	28	17	10	5	13	6	13	M8	32	16	6	8	16	89	.29
37157	M10	13	32	22	10	6	16	10	13	M8	38	19	8	10	19	114	.38
37161	M16	17	38	27	10	6	19	13	19	M8	44	22	10	13	19	127	1.19
37164	M20	20	38	29	10	6	19	13	19	M8	44	25	10	13	19	127	1.31

Long Slot U-Straps

- Material: Low Carbon Steel
- Finish: Black Oxide
- Thread: UNC-2B (Inch); 6h (Metric)
- Heat Treat: Case Hardened Rockwell 30N Scale 59-69
- Designed to be used with Adjustable Clamp Heels, found on page 274, and Clamp Assembly Heels on page 232

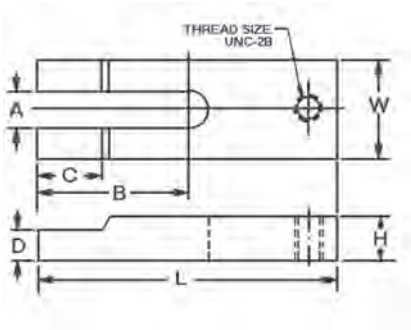

Part Number	Bolt Size	A	B	C	D	Thread Size	W	H	L	Wt. (lbs)
47021	1/2 or M12	17/32	2 1/2	—	—	1/2-13	1 1/2	3/4	4	1.18
47022	1/2 or M12	17/32	3 1/2	—	—	1/2-13	1 1/2	3/4	6	1.92
47023	5/8 or M16	21/32	2 7/16	5/8	3/4	5/8-11	1 3/4	7/8	4	1.52
47024	5/8 or M16	21/32	3 15/16	5/8	3/4	5/8-11	1 3/4	7/8	7	2.73
47025	3/4 or M20	25/32	3 1/2	5/8	3/4	3/4-10	2	1	6	2.96
47026	3/4 or M20	25/32	5	5/8	3/4	3/4-10	2	1 1/4	8	3.99
47027	1 or M24	1 1/16	5 1/2	5/8	3/4	1-8	2 1/2	1 1/2	10	8.12

Long Slot U-Straps
Metric

- Material: Low Carbon Steel
- Finish: Black Oxide
- Thread: UNC-2B (Inch); 6h (Metric)
- Heat Treat: Case Hardened Rockwell 30N Scale 59-69
- Designed to be used with Adjustable Clamp Heels, found on page 274, and Clamp Assembly Heels on page 232

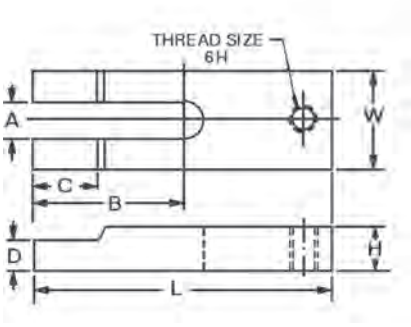

Part Number	Bolt Size	A	B	C	D	Thread Size	W	H	L	Wt (kg)
47071	M12	13	64	—	—	M12	38	19	100	.54
47072	M12	13	89	—	—	M12	38	19	150	.87
47073	M16	17	62	16	19	M16	44	22	100	.70
47074	M16	17	100	16	19	M16	44	22	175	1.24
47075	M20	20	89	16	19	M20	50	25	150	1.34
47076	M20	20	127	16	19	M20	50	32	200	1.81
47077	M24	27	140	16	19	M24	64	38	250	3.68

Radius Straps

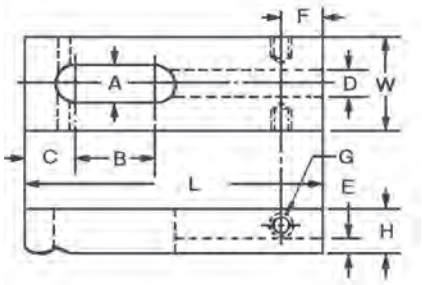

Jergens Feature:

The elongated slot allows for greater clamping force on the part.

- Material: Low Carbon Steel
- Finish: Black Oxide
- Heat Treat: Case Hardened Rockwell 30N Scale 59-69

Part Number	Bolt Size	A	B	C	D	E	F	G	W	H	L	Wt. (lbs)
36703	1/4 or M6	9/32	5/8	3/8	1/4	1/8	—	—	5/8	3/8	2	0.09
36708	1/4 or M6	9/32	1	3/8	1/4	1/8	—	—	5/8	3/8	2-1/2	0.11
36717	5/16	11/32	3/4	9/16	1/4	1/4	—	—	7/8	1/2	2-1/2	0.20
36718	5/16	11/32	1-1/4	9/16	1/4	1/4	—	—	7/8	1/2	3-1/2	0.25
36704	3/8 or M10	13/32	1-1/8	11/16	3/8	3/16	1/2	5/16-18	1-1/4	5/8	3-1/2	0.61
36719	3/8 or M10	13/32	1-5/8	11/16	3/8	3/16	1/2	5/16-18	1-1/4	5/8	4-1/2	0.71
36705	1/2 or M12	17/32	1-1/4	7/8	3/8	1/4	1/2	5/16-18	1-1/2	3/4	4-1/2	1.12
36714	1/2 or M12	17/32	2	7/8	3/8	1/4	1/2	5/16-18	1-1/2	3/4	6	1.56
36706	5/8 or M16	21/32	1-1/2	1-1/16	3/8	1/4	3/4	5/16-18	1-3/4	7/8	5	1.75
36715	5/8 or M16	21/32	2-1/2	1-1/16	3/8	1/4	3/4	5/16-18	1-3/4	7/8	7	2.44
36707	3/4	25/32	1-1/2	1-1/8	3/8	1/4	3/4	5/16-18	1-3/4	1	5	2.00
36716	3/4	25/32	2-1/2	1-1/8	3/8	1/4	3/4	5/16-18	1-3/4	1	7	2.70

Double End Radius Strap

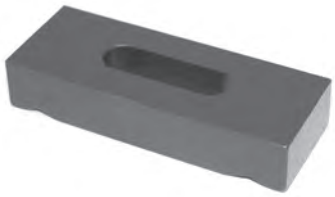

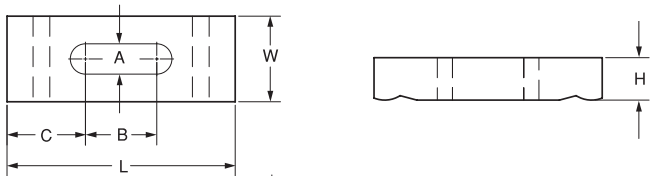

Part Number	Bolt Size	A	B	C	H	W	L	Wt (lbs)
36728	1/2 or M12	17/32	1-1/4	1-3/8	3/4	1-1/2	4	0.80
36729	1/2 or M12	17/32	1-1/2	1-3/4	3/4	1-1/2	5	1.25
36730	5/8 or M16	21/32	1-1/2	2-1/4	7/8	1-3/4	6	2.20

Swing Style Radius Nose Straps

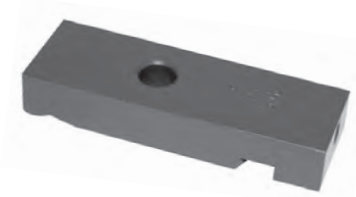

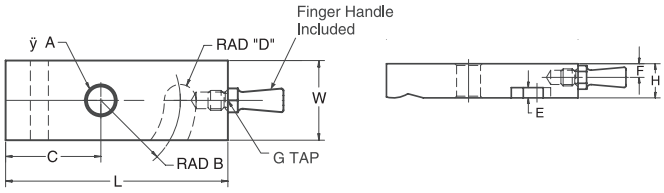

Part Number	Bolt Size	A	B	C	D	E	F	G	W	H	L	Wt (lbs)
36723	1/4	5/16	11/16	1	1/8	1/8	n/a	n/a	5/8	3/8	2	0.09
36724	3/8	7/16	1-1/4	1-1/2	1/4	3/16	1/4	5/16-18	1-1/4	5/8	3-1/2	0.61
36725	1/2	9/16	1-7/8	1-3/16	1/4	1/4	1/4	5/16-18	1-1/2	3/4	4-1/2	1.12
36726	5/8	11/16	2-3/16	2-1/16	1/4	1/4	1/4	5/16-18	1-3/4	7/8	5	1.75
36727	3/4	13/16	2-3/16	2-1/16	1/4	1/4	1/4	5/16-18	1-3/4	1	5	2.00

Tapped Straps

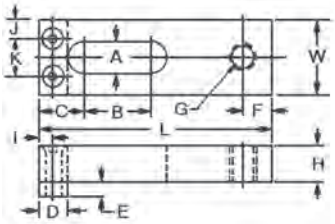

Jergens Feature:

The elongated slot allows for greater clamping force on the part. A steel pad is standard. Plastic or brass pads may be ordered separately, see page 237.

- Material: Low Carbon Steel
- Finish: Black Oxide
- Thread: 2B-UNC
- Heat Treat: Case Hardened Rockwell 30N Scale 59-69
- Tapped for use with adjustable clamp heel found on page 274

Part Number	Bolt Size	A	B	C	D	E	F	Thread Size G	I	J	K	W	H	L	Wt. (lbs)
36911	1/4 or M6	9/32	5/8	3/8	1/4	1/8	7/32	1/4-20	9/64	9/64	11/32	5/8	3/8	2	.10
36913	5/16 or M8	11/32	3/4	9/16	3/8	3/16	1/4	5/16-18	3/16	3/16	1/2	7/8	1/2	2 1/2	.20
36914	5/16 or M8	11/32	1 1/4	9/16	3/8	3/16	1/4	5/16-18	3/16	3/16	1/2	7/8	1/2	3 1/2	.27
36915	3/8 or M10	13/32	1 1/8	11/16	1/2	1/4	3/8	3/8-16	1/4	5/16	5/8	1 1/4	5/8	3 1/2	.69
36916	3/8 or M10	13/32	1 5/8	11/16	1/2	1/4	3/8	3/8-16	1/4	5/16	5/8	1 1/4	5/8	4 1/2	.88
36917*	1/2 or M12	17/32	1 1/4	7/8	5/8	3/8	7/16	1/2-13	1/4	3/8	3/4	1 1/2	3/4	4 1/2	.70
36918*	1/2 or M12	17/32	2	7/8	5/8	3/8	7/16	1/2-13	1/4	3/8	3/4	1 1/2	3/4	6	.90

* Carbide Gripper Kits are available, contact Technical Sales Department for details. Gripper Part #23704.

Tapped Straps
Metric

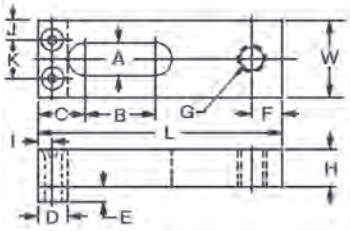

- Material: Low Carbon Steel
- Finish: Black Oxide
- Thread: 6h
- Heat Treat: Case Hardened Rockwell 30N Scale 59-69
- Tapped for use with adjustable clamp heel found on page 274

Part Number	Bolt Size	A	B	C	D	E	F	Thread Size 6h G	I	J	K	W	H	L	Wt. (Kg)
36961	M6	7	16	9	6	3	5	M6	4	4	9	16	9	50	.05
36963	M8	9	19	14	9	5	6	M8	5	5	12	22	13	63	.11
36965	M10	10	28	17	13	6	9	M10	6	8	16	32	16	88	.37
36967	M12	13	31	22	16	9	11	M12	6	9	19	38	19	113	.47

* Carbide Gripper Kits are available, contact Technical Sales Department for details. Gripper Part #23704.

Taper Nose Straps

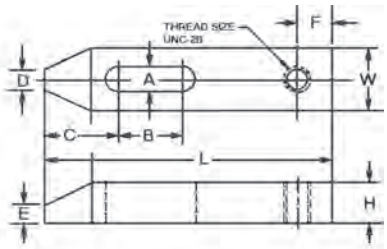

- Material: Low Carbon Steel
- Finish: Black Oxide
- Thread: UNC-2B
- Heat Treat: Case Hardened Rockwell 30N Scale 59-69
- Designed to be used with Adjustable Clamp Heels, found on page 274

Part Number	A	B	C	D	E	F	Thread Size	W	H	L	Wt. (lbs)
47119	13/32	1/2	13/16	3/8	3/16	7/16	3/8-16	1	1/2	3	.55
47120	13/32	1	15/16	3/8	3/16	7/16	3/8-16	1 1/4	5/8	4	.75
47123	13/32	1 1/2	15/16	3/8	3/16	7/16	3/8-16	1 1/4	5/8	5	.90
47124	17/32	1/2	1 1/16	1/2	1/4	7/16	1/2-13	1 1/4	5/8	3 1/2	.80
47125	17/32	1 1/4	1 3/16	1/2	1/4	7/16	1/2-13	1 1/4	3/4	4 1/2	1.10
47126	17/32	2	1 5/16	1/2	1/4	7/16	1/2-13	1 1/4	7/8	6	1.60
47127	21/32	1/2	1 3/16	5/8	1/4	1/2	5/8-11	1 1/4	5/8	4	1.80
47128	21/32	1 1/4	1 3/16	5/8	3/8	1/2	5/8-11	1 1/2	3/4	5	2.20
47129	21/32	2	1 5/16	5/8	3/8	1/2	5/8-11	1 1/2	7/8	7	3.10
47130	25/32	3/4	1 5/16	5/8	3/8	9/16	3/4-10	1 1/2	3/4	5	2.85
47131	25/32	1 1/2	1 1/2	5/8	3/8	9/16	3/4-10	1 1/2	1	6	3.40
47132	25/32	2 1/4	1 5/8	5/8	3/8	9/16	3/4-10	1 3/4	1 1/8	8	4.70
47134	1 1/16	2	2 5/8	7/8	5/8	11/16	1-8	2	1 1/2	10	9.55

Metric Taper Nose Straps

- Material: Low Carbon Steel
- Finish: Black Oxide
- Thread: 6h
- Heat Treat: Case Hardened Rockwell 30N Scale 59-69
- Designed to be used with Adjustable Clamp Heels, found on page 274

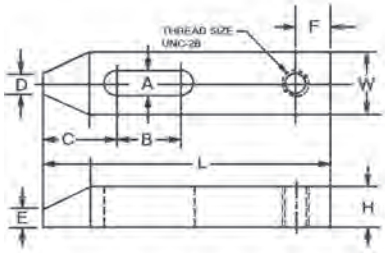

Part Number	A	B	C	D	E	F	Thread Size	W	H	L	Wt. (Kg)
47169	11	13	21	10	5	11	M10 x 1.5	25	13	75	.30
47175	13	33	30	13	10	11	M12 x 1.75	32	19	114	.60
47179	17	50	33	16	10	13	M16 x 2.0	38	22	175	1.70
47182	21	57	41	16	10	14	M20 x 2.5	44	29	200	2.53
47184	26	50	67	22	16	17	M24 x 3.0	50	38	250	5.15

Forged Strap Clamps

Heel Clamp

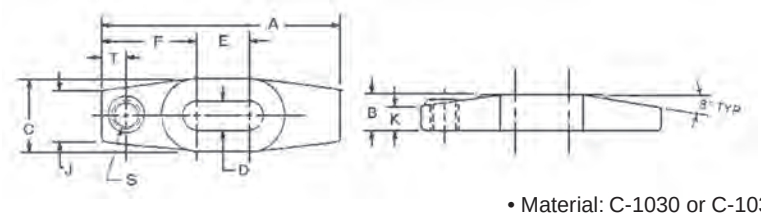

• Material: C-1030 or C-1035

Standard & Tapped Heel Clamps

Part Number		Bolt											Wt.
Standard	Tapped	Size	A	B	C	D	E	F	J	K	S*	T	(lbs)
37201	**37202**	5/8 or M16	4	3/4	1 5/8	11/16	11/16	1 21/32	1 3/16	1/2	1/2-13	1/2	1.00
37203	**37204**	5/8 or M16	6	7/8	1 3/4	11/16	1 3/8	2 5/16	1 1/4	9/16	5/8-11	5/8	1.75
37205	**37206**	3/4 or M20	8	1 1/8	2 1/8	13/16	2	3	1 1/2	3/4	3/4-10	3/4	3.75
37207	**37208**	7/8 or M20	10	1 3/8	2 1/2	15/16	2 3/4	3 5/8	1 3/4	15/16	7/8-9	7/8	7.00

*Applicable to Tapped Clamp Only

Metric Standard & Tapped Heel Clamps

Part Number		Bolt											Wt.
Standard	Tapped	Size	A	B	C	D	E	F	J	K	S*	T	(Kg)
37201	**37252**	M16	100	19	41	17	17	42	30	13	M12 x 1.75	13	.53
37203	**37254**	M16	150	22	44	17	35	59	32	14	M16 x 2.0	16	.94
37205	**37256**	M20	200	29	54	21	50	75	38	19	M20 x 2.5	19	2.0
37207	**37258**	M20	250	35	63	24	70	92	44	24	M24 x 3.0	22	3.8

*Applicable to Tapped Clamp Only

Gooseneck Clamp

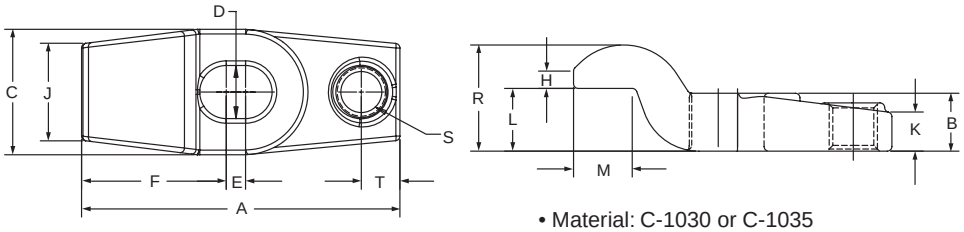

• Material: C-1030 or C-1035

Standard & Tapped Gooseneck Clamps

Part Number		Bolt															Wt.
Standard	Tapped	Size	A	B	C	D	E	F	H	J	K	L	M	R	S*	T	(lbs)
37211	**37212**	5/8	4	3/4	1 5/8	11/16	1/4	1 7/8	3/8	1 3/16	1/2	13/16	3/4	1 7/16	5/8-11	1/2	1.00
37213	**37214**	5/8	6	7/8	1 3/4	11/16	1	2 1/2	7/16	1 1/4	9/16	15/16	1 1/8	1 9/16	5/8-11	5/8	2.00
37215	**37216**	3/4	8	1 1/8	2 1/8	13/16	1 5/8	3 3/16	9/16	1 1/2	3/4	1 1/8	1 1/4	2 1/16	5/8-11	1	4.25

*Applicable to Tapped Clamp Only

Part Number		Bolt															Wt.
Standard	Tapped	Size	A	B	C	D	E	F	H	J	K	L	M	R	S*	T	(Kg)
37211	**37262**	M16	100	19	41	17	6	48	10	30	13	20	19	37	M16 x 2.013		.53
37213	**37264**	M16	150	22	44	17	25	63	11	32	14	24	28	40	M16 x 2.016		1.4
37215	**37266**	M20	200	29	54	21	41	81	14	38	19	28	32	52	M16 x 2.025		2.3

*Applicable to Tapped Clamp Only

Forged Strap Clamps

Finger Clamp

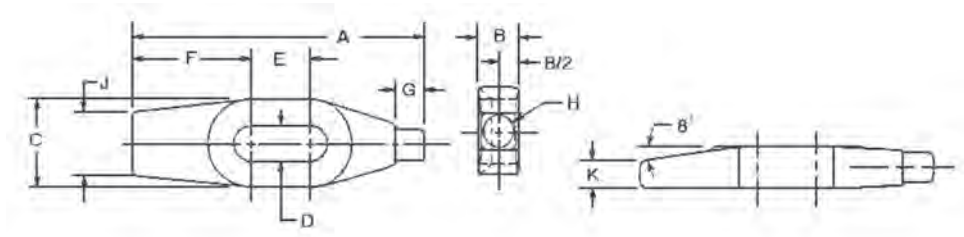

• Material: C-1030 or C-1035

Part Number	Bolt Size	A	B	C	D	E	F	G	H	J	K	Wt. (lbs)
37221	5/8 or M16	4	3/4	1 5/8	11/16	11/16	1 21/32	1/2	1/2	1 3/16	7/16	.75
37223	5/8 or M16	6	7/8	1 3/4	11/16	1 1/4	2 3/8	5/8	5/8	1 1/4	1/2	1.50
37225	3/4 or M20	8	1 1/8	2 1/8	13/16	1 3/4	3 1/8	3/4	3/4	1 1/2	5/8	3.00

Metric

Part Number	Bolt Size	A	B	C	D	E	F	G	H	J	K	Wt. (Kg)
37221	M16	100	19	41	17	17	42	13	13	30	11	.40
37223	M16	150	22	44	17	32	59	16	16	32	13	.81
37225	M20	200	29	54	21	44	79	19	19	38	16	1.6

Forged Strap Clamps

"U" Clamp

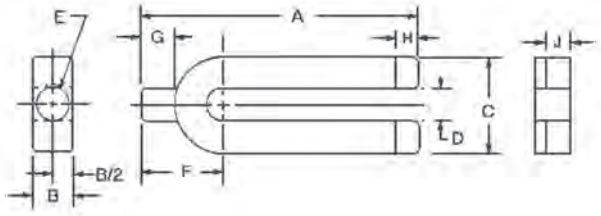

• Material: C-1030 or C-1035

Part Number	Bolt Size	A	B	C	D	E	F	G	H	J	Wt. (lbs)
37231	5/8 or M16	4	3/4	1 3/4	11/16	9/16	1 7/16	9/16	1/2	1/2	1.00
37232	5/8 or M16	6	7/8	2	11/16	11/16	1 11/16	11/16	5/8	9/16	2.00
37233	3/4 or M20	8	1 1/8	2 3/8	13/16	13/16	2	13/16	3/4	11/16	4.00
37234	7/8 or M24	10	1 1/4	2 3/4	15/16	15/16	2 5/16	15/16	7/8	3/4	6.50
37235	1 or M24	12	1 3/8	3 1/4	1 1/16	1 1/16	2 11/16	1 1/16	1	13/16	9.00

Part Number	Bolt Size	A	B	C	D	E	F	G	H	J	Wt. (Kg)
37231	M16	100	19	44	17	14	37	14	13	13	.53
37232	M16	150	22	50	17	17	43	17	16	14	1.1
37233	M20	200	29	59	21	21	50	21	19	17	2.2
37234	M24	250	32	70	24	24	59	24	22	19	3.5
37235	M24	300	35	83	27	27	68	27	25	21	4.9

Forged Adjustable Clamps

Forged Adjustable Clamps automatically compensate for clamping height changes within their clamping ranges (see chart for ranges). The swivel bushing is permanently mounted in the clamp which alleviates lost or missing parts. The standard brass heel plate protects the machine table.

Forged Adjustable Clamp holding one side of a hydraulic vise on a milling machine table.

- Material: 1137 Forged Steel, Heat Treated
- Finish: Black Oxide
- One Piece Construction
- Versatile Clamping Height
- Made in U.S.A.

Features high quality forging providing superior clamping strength.

Part Number	Bolt Size	Clamping Range	W	T	L	X	Maximum Torque (ft-lbs)	Max Holding* Force (lbs)	Wt. (lbs)
19101	1/2	0-2	1 3/4	1 1/2	4 1/4	2 1/2	90	6800	1.1
19102	5/8	0-2 3/8	2	1 5/8	5	3	180	10600	1.7
19103	3/4	0-2 3/4	2 1/2	1 3/4	6 1/4	3 3/4	300	16000	3.0
19104	7/8	0-3 1/2	3	2 3/8	7	4 1/4	500	21800	5.3
19104	1	0-3 1/2	3	2 3/8	7	4 1/4	760	28600	5.3

Metric

Part Number	Bolt Size	Clamping Range	W	T	L	X	Maximum Torque (N.m)	Max Holding* Force (Kgf)	Wt. (Kg)
19101	M12	0-50	44	38	108	63	100	2800	0.60
19102	M16	0-60	50	41	125	75	260	5250	0.92
19103	M20	0-70	63	44	159	95	500	8250	1.60
19104	M24	0-89	75	60	175	108	870	11850	2.90

*** *Note:* Holding forces are based on using Jergens heat treated alloy steel T-slot bolts, Studs, T-nuts and Flange nuts in order at the recommended torque.**

Accessories Available

T-Slot Bolts	Flange Nuts	T-Slot Nuts	Studs	Washers
Page 257	Page 259	Page 264	Page 254	Page 265

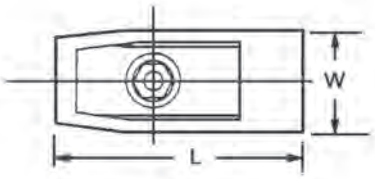

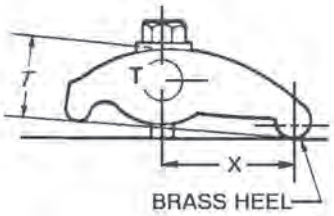

Steel Heel Straps

Coarse Pitch

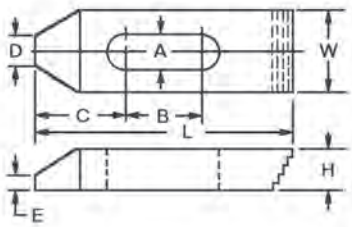

The step teeth of the Coarse Pitch Steel Heel Straps match the Jergens Aluminum Step Blocks. These straps facilitate easier height adjustments on set-ups.

- Material: Low Carbon Steel
- Finish: Black Oxide
- Heat Treat: Case Hardened Rockwell 30N 50-54

Part Number	Bolt Size	A	B	C	D	E	H	L	W	Wt. (lbs)
46814	1/2 or M12	17/32	1/2	1 1/16	1/2	1/4	5/8	2 1/2	1 1/4	.46
46815	1/2 or M12	17/32	1 1/4	1 3/16	1/2	1/4	3/4	4	1 1/4	.65
46816	1/2 or M12	17/32	2	1 5/16	1/2	1/4	7/8	6	1 1/4	.95
46817	5/8 or M16	21/32	1/2	1 3/16	5/8	1/4	5/8	3	1 1/4	.66
46818	5/8 or M16	21/32	1 1/4	1 3/16	5/8	3/8	3/4	5	1 1/2	.93
46819	5/8 or M16	21/32	2	1 5/16	5/8	3/8	7/8	7	1 1/2	1.36
46820	3/4 or M20	25/32	3/4	1 5/16	5/8	3/8	3/4	4	1 1/2	1.39
46821	3/4 or M20	25/32	1 1/2	1 1/2	5/8	3/8	1	6	1 1/2	1.94
46822	3/4 or M20	25/32	2 1/4	1 5/8	5/8	3/8	1 1/8	8	1 3/4	2.48

Fine Pitch

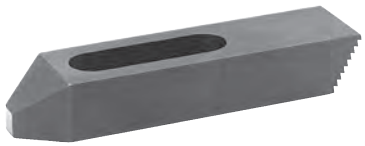

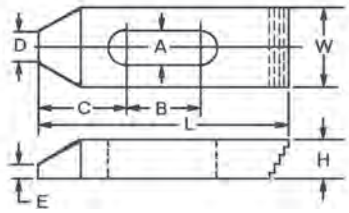

The step teeth of the Fine Pitch Steel Heel Straps match the Jergens Steel Step Blocks. These straps facilitate easier height adjustment on set-ups.

- Material: Low Carbon Steel
- Finish: Black Oxide
- Heat Treat: Case Hardened Rockwell 30N 50-54

Part Number	Bolt Size	A	B	C	D	E	H	L	W	Wt. (lbs)
46834	1/2 or M12	9/16	1/2	1 1/16	1/2	1/4	1/2	2 1/2	1 1/8	.46
46835	1/2 or M12	9/16	1 1/4	1 3/16	1/2	1/4	3/4	4	1 1/4	.65
46836	1/2 or M12	9/16	2	1 5/16	1/2	1/4	7/8	6	1 1/4	.95
46837	5/8 or M16	11/16	1/2	1 3/16	5/8	1/4	5/8	2 1/2	1 1/4	.66
46838	5/8 or M16	11/16	1 1/4	1 3/16	5/8	3/8	3/4	4	1 1/2	.93
46839	5/8 or M16	11/16	2	1 5/16	5/8	3/8	7/8	6	1 1/2	1.36
46840	3/4 or M20	13/16	3/4	1 5/16	5/8	3/8	3/4	4	1 1/2	1.39
46841	3/4 or M20	13/16	1 1/2	1 1/2	5/8	3/8	1	6	1 5/8	1.94
46842	3/4 or M20	13/16	2 1/4	1 5/8	5/8	3/8	1 1/8	8	1 3/4	2.48

Adjustable Step Blocks
Aluminum — Coarse Pitch

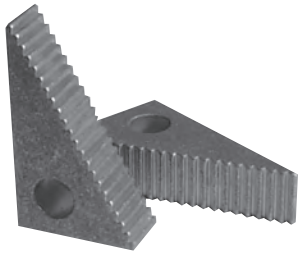

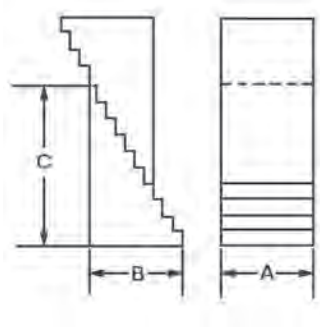

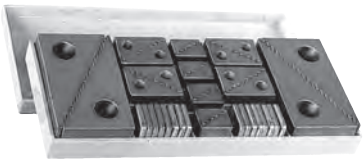

1" & 2" Wide Adjustable Step Block Kits

Step blocks are made of aluminum to prevent damage to machine table surfaces.

Tooth design has no sharp edges which helps to prevent burrs and chip build-up in the steps. Blocks are completely interchangeable with each other, and with the Jergens Coarse Pitch Step Straps.

Standard (1" Width) Kit
21701

Included in Kit:

Qty Per Kit	Part Number (Blocks Only)	A	B	C	Step Elevation	Wt. (lbs)
8	**21705**	1	5/8	1 1/16	11/64	.03
8	**21702**	1	1	1 3/4	11/64	.09
4	**21703**	1	2 3/16	3 3/4	11/64	.39
16	**21706**	Protective Pad			11/64	.02

Heavy Duty (2" Width) Kit
21711

Included in Kit:

Qty Per Kit	Part Number (Blocks Only)	A	B	C	Step Elevation	Wt. (lbs)
8	**21712**	2	5/8	1 1/16	11/64	.06
8	**21713**	2	1	1 3/4	11/64	.18
4	**21714**	2	2 3/16	3 3/4	11/64	.78
16	**21715**	Protective Pad			11/64	.04

Steel — Fine Pitch

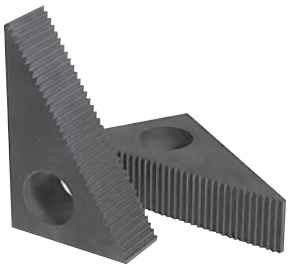

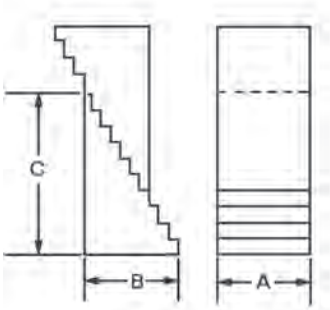

Adjustable Step Block Kit

Blocks are completely interchangeable with each other, and with the Jergens Fine Pitch Step Straps.

Adjustable Step Block Kit
21821

Included in Kit:

Qty Per Kit	Part Number (Blocks Only)	A	B	C	Step Elevation	Wt. (oz)
8	**21831**	1	5/8	1 1/8	3/32	2
8	**21832**	1	1 1/16	1 3/4	3/32	4
4	**21833**	1	2 3/8	3 7/8	3/32	14
16	**21706**	Protective Aluminum Pad				

Step Blocks sold individually.

60-Piece Set-Up Kits
Aluminum Step Blocks

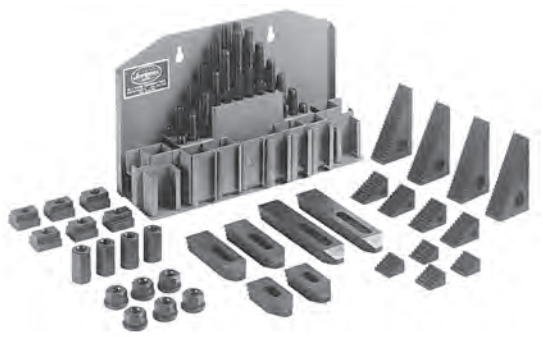

Kit with Metal Holder

Each 60-Piece Set-Up Kit is supplied with either a non-marring wooden base or a heavy duty steel holder. Tooth design has no sharp edges, which helps to prevent burrs and chips from building up on the steps. The aluminum blocks will not mar precision machine tables.

Each Set-Up-Kit Includes:
- Six Table Saver T-Nuts
- Six Flange Nuts
- Six Step Heel Straps
- Four Coupling Nuts
- Twenty-four Studs:
  Four each of 3", 4", 5", 6" 7", 8" lengths
- Twelve Course Pitch Aluminum Step Blocks
- One T-Slot Cleaner
- One Metal Holder

Part Number Metal Holder	Stud T-Slot Width	Thread Size	Strap Lengths	Wt (lbs)
45105	9/16	1/2-13	2 1/2, 4, 6	20
45106	5/8	1/2-13	2 1/2, 4, 6	20
45104	11/16	1/2-13	2 1/2, 4, 6	20
45108	11/16	5/8-11	3, 5, 7	30
45109	3/4	5/8-11	3, 5, 7	30
45107	13/16	5/8-11	3, 5, 7	30

Metal kit holders are also sold seperately.
Same holder used for both kits.

1/2" Metal Holder
45116

5/8" Metal Holder
45117

60-Piece Set-Up Kits
Steel Step Blocks

Each 60-Piece Set-Up Kit is supplied with either a non-marring wooden base or a heavy duty steel holder. The fine pitch steel blocks are compatible with other standard step blocks and straps.

NOTE: The fine pitch blocks are not compatible with the Jergens course pitch aluminum blocks.

Each Set-Up Kit Includes:
- Six Table Saver T-Nuts
- Six Flange Nuts
- Six Step Heel Straps
- Four Coupling Nuts
- Twenty-four Studs:
  Four each 3", 4", 5", 6", 7", 8" lengths
- Twelve Fine Pitch Steel Step Blocks
- One Metal Holder

Part Number Metal Holder	Stud T-Slot Width	Thread Size	Strap Lengths	Wt. (lbs)
45205	9/16	1/2-13	2 1/2, 4, 6	20
45206	5/8	1/2-13	2 1/2, 4, 6	20
45204	11/16	1/2-13	2 1/2, 4, 6	20
45208	11/16	5/8-11	2 1/2, 4, 6	30
45209	3/4	5/8-11	2 1/2, 4, 6	30
45207	13/16	5/8-11	2 1/2, 4, 6	30

40-Piece Clamping Kit

Contains the same quality components as the larger kits but without the step blocks and step heel straps. This Clamping Kit includes taper nose straps, T-nuts, coupling nuts, flange nuts, clamping heels and studs.

Each Clamping Kit Includes:

- Four Table Saver T-Nuts
- Twenty Studs:
  Four Each 4", 5", 6", 7", 8" lengths
- Four Adjustable Clamp Heels
- Four Flange Nuts
- Four Coupling Nuts
- Four Taper Nose Straps
- One T-Slot Cleaner
- One Wooden Holder (†)

Part Number	T-Slot Width	Stud Thread Size	Strap Clamp	Adjustable Clamp Heel	Wt. (lbs)
45022 †	7/16*	3/8-16	5/8 x 1 1/4 x 5	3/8-16 x 3	12
45023 †	1/2	3/8-16	5/8 x 1 1/4 x 5	3/8-16 x 3	12
45021	9/16	3/8-16	5/8 x 1 1/4 x 5	3/8-16 x 3	12
45025	9/16*	1/2-13	7/8 x 1 1/4 x 6	1/2-13 x 4	20
45026	5/8	1/2-13	7/8 x 1 1/4 x 6	1/2-13 x 4	20
45024	11/16	1/2-13	7/8 x 1 1/4 x 6	1/2-13 x 4	20
45028 †	11/16*	5/8-11	7/8 x 1 1/2 x 7	5/8-11 x 5	30
45029 †	3/4	5/8-11	7/8 x 1 1/2 x 7	5/8-11 x 5	30
45027 †	13/16	5/8-11	7/8 x 1 1/2 x 7	5/8-11 x 5	30
45031	13/16*	3/4-10	1 x 1 1/2 x 6	3/4-10 x 6	40
45032	7/8	3/4-10	1 x 1 1/2 x 6	3/4-10 x 6	40
45030	1 1/16	3/4-10	1 x 1 1/2 x 6	3/4-10 x 6	40

*T-Nuts not hardened due to thin wall.
† Includes Wood Holder.

Die Set-Up Kits

These Die Set-Up Kits can be used with any of the Jergens heavy duty straps; however, the kits are best suited **for use with forged strap clamps** found on pages 280 thru 282.

Each Kit includes:

- Four Flange Nuts
- Four Heavy Duty Washers
- Twelve Steel Step Blocks
- Twenty Studs
- One Wooden Holder

Thread Size	Part Number	Stud Lengths
1/2-13	**44921**	3, 4, 5, 6, 8
5/8-11	**44922**	3, 4, 5, 6, 8
3/4-10	**44923**	4, 5, 6, 8, 10

Toe Clamps
Small

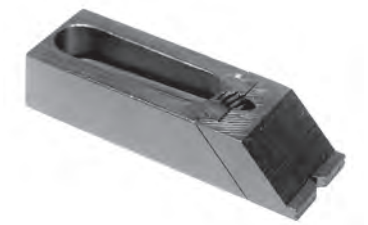

Jergens Feature:
3° Taper Prevents Back-off

Toe Clamps are powerful, low profile clamps that grip on the side of the workpiece leaving the top surface open. This minimizes interference with cutting tools or measuring instruments. Ideal for use on mills, planers, jig borers, drill presses, and faceplates.

- Steel or brass toe and special washer are included with each clamp
- Slotted for 5/16 or M8 Cap Screws
- Case hardened for maximun wear
- Black Oxide finish

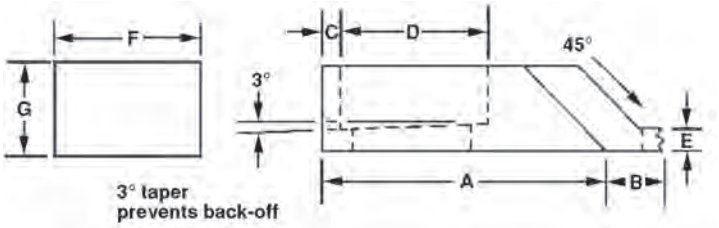

Part Number	Toe Material	Toe Style	A	B	C	D	E	F	G	Wt. (lbs)	Toe Only
46921	STEEL	STANDARD	1 1/2	1/2	1/16	3/4	1/8	1	5/8	.24	**46952**
46961	BRASS	STANDARD	1 1/2	1/2	1/16	3/4	1/8	1	5/8	.24	**46946**
46971	STEEL	HIGH GRIP	1 1/2	1/2	1/16	3/4	5/8	1	5/8	.26	**46948**
46981	BRASS	HIGH GRIP	1 1/2	1/2	1/16	3/4	5/8	1	5/8	.26	**46950**
46922	STEEL	STANDARD	2	1/2	1/16	1 1/4	1/8	1	5/8	.30	**46952**
46962	BRASS	STANDARD	2	1/2	1/16	1 1/4	1/8	1	5/8	.30	**46946**
46972	STEEL	HIGH GRIP	2	1/2	1/16	1 1/4	5/8	1	5/8	.32	**46948**
46982	BRASS	HIGH GRIP	2	1/2	1/16	1 1/4	5/8	1	5/8	.32	**46950**
46923	STEEL	STANDARD	2 1/2	1/2	1/16	1 3/4	1/8	1	5/8	.35	**46952**
46963	BRASS	STANDARD	2 1/2	1/2	1/16	1 3/4	1/8	1	5/8	.35	**46946**
46973	STEEL	HIGH GRIP	2 1/2	1/2	1/16	1 3/4	5/8	1	5/8	.37	**46948**
46983	BRASS	HIGH GRIP	2 1/2	1/2	1/16	1 3/4	5/8	1	5/8	.37	**46950**

* Replacement Parts available, contact customer service.

Small Toe Clamp Kits

Each Clamp Kit Includes:
- Six Toe Clamps:Two of each length (1 1/2", 2", 2 1/2")
- Six Low Grip Steel Toes
- Six Toe Clamp Nuts
- Six Protective Washers
- One T-Wrench
- One Wooden Holder

Part Number	Table Slot	Toe Clamps	Toe Clamp Nuts	Washers	lbs Per Kit
44901	3/8	**46921, 46922, 46923**	**46931**	**46942**	3
44902	7/16	**46921, 46922, 46923**	**46932**	**46942**	3
44903	1/2	**46921, 46922, 46923**	**46933**	**46942**	3
44904	9/16	**46921, 46922, 46923**	**46934**	**46942**	3
44905	5/8	**46921, 46922, 46923**	**46935**	**46942**	3

Slotted for 5/16" or M8 Socket Head Cap Screws
* Replacement Parts available, contact customer service.

Toe Clamps
Large

Jergens Feature:

3° Taper Prevents Back-off

Toe Clamps are powerful, low profile clamps that grip on the side of the workpiece leaving the top surface open. This minimizes interference with cutting tools or measuring instruments. Ideal for use on mills, planers, jig borers, drill presses, and faceplates.

- Steel or brass toe and special washer are included with each clamp.
- Slotted for 1/2" or M12 Cap Screws
- Low Carbon Steel hardened for maximum wear
- Black Oxide finish

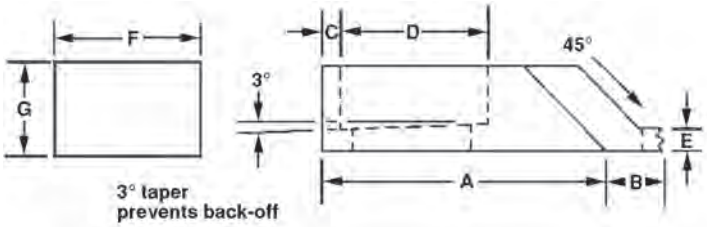

Part Number	Toe Material	Toe Style	A	B	C	D	E	F	G	Wt. (lbs)	Toe Only
46926	STEEL	STANDARD	3 1/4	13/16	1/8	2	1/4	1 1/2	7/8	1.0	**46953**
46966	BRASS	STANDARD	3 1/4	13/16	1/8	2	1/4	1 1/2	7/8	1.0	**46947**
46976	STEEL	HIGH GRIP	3 1/4	13/16	1/8	2	7/8	1 1/2	7/8	1.3	**46949**
46986	BRASS	HIGH GRIP	3 1/4	13/16	1/8	2	7/8	1 1/2	7/8	1.3	**46951**
46927	STEEL	STANDARD	4 11/16	13/16	1/2	2 3/4	1/4	1 1/2	7/8	1.4	**46953**
46967	BRASS	STANDARD	4 11/16	13/16	1/2	2 3/4	1/4	1 1/2	7/8	1.4	**46947**
46977	STEEL	HIGH GRIP	4 11/16	13/16	1/2	2 3/4	7/8	1 1/2	7/8	1.7	**46949**
46987	BRASS	HIGH GRIP	4 11/16	13/16	1/2	2 3/4	7/8	1 1/2	7/8	1.7	**46951**
46928	STEEL	STANDARD	6 5/8	13/16	1	3 3/4	1/4	1 1/2	7/8	2.0	**46953**
46968	BRASS	STANDARD	6 5/8	13/16	1	3 3/4	1/4	1 1/2	7/8	2.0	**46947**
46978	STEEL	HIGH GRIP	6 5/8	13/16	1	3 3/4	7/8	1 1/2	7/8	2.3	**46949**
46988	BRASS	HIGH GRIP	6 5/8	13/16	1	3 3/4	7/8	1 1/2	7/8	2.3	**46951**

* 5/8 or M16 Cap Screw Slot and replacement parts available, contact customer service.

Large Toe Clamp Kits

Each Clamp Kit Contains:

- Six Toe Clamps: Two of each length (3 1/4", 4 11/16", 6 5/8")
- Four Low Grip Steel Toes
- Six Toe Clamp Nuts
- Six Protective Washers
- One T-Wrench
- One Wooden Holder

Part Number	Table Slot	Toe Clamps	Toe Clamp Nuts	Washers	lbs Per Kit
44906	9/16	**46926, 46927, 46928**	**46936**	**46943**	11
44907	5/8	**46926, 46927, 46928**	**46937**	**46943**	12
44909	11/16	**46926, 46927, 46928**	**46938**	**46943**	12
44910	13/16	**46926, 46927, 46928**	**46939**	**46943**	13
44911	7/8	**46926, 46927, 46928**	**46940**	**46943**	14
44912	1	**46926, 46927, 46928**	**46941**	**46943**	15

Slotted for 1/2" or M12 Socket Head Cap Screws
* 5/8 or M16 Cap Screw Slotted Kits and replacement parts available, contact customer service.

Lo-Profile Micro™ Clamps

Problem: You require a clamping device which can grip low on a work piece, has exceptional horizontal *and* vertical holding force, and can be mounted below the fixture plate surface.

Solution: Jergens new Lo-Profile Micro clamps are the answer!

Material:
- Available in tool steel or brass
- Extraordinary horizontal and vertical force
- Extremely low profile
- Very small foot print
- High resistance to pull-out
- Choose among three sizes with inch or metric screws
- Knife and blunt edge styles

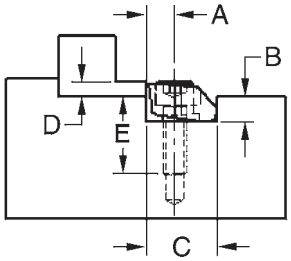

Lo-Profile Micro™ Clamps

Part Number	Description	A	B	C	D*	E	Clamp Width	Screw Size	Torque (ft/lbs)	Max. Holding Force (lbs)	Total Throw	Clamps Per Package
13201	Tool Steel, Knife Edge	.150	.140	.375	.075	.260	.375	4-40	1.30	650	.0075	8
13202	Tool Steel, Blunt Edge	.150	.140	.375	.075	.260	.375	4-40	1.30	650	.0075	8
13203	Brass, Blunt Edge	.150	.140	.375	.075	.220	.375	4-40	.41	200	.0075	8
13211	Tool Steel, Knife Edge	.200	.187	.500	.100	.390	.500	8-32	3.70	1500	.0160	8
13212	Tool Steel, Blunt Edge	.200	.187	.500	.100	.390	.500	8-32	3.70	1500	.0160	8
13213	Brass, Blunt Edge	.200	.187	.500	.100	.340	.500	8-32	2.00	400	.0160	8
13221	Tool Steel, Knife Edge	.300	.280	.750	.150	.570	.750	1/4-20	14.50	3600	.0240	6
13222	Tool Steel, Blunt Edge	.300	.280	.750	.150	.570	.750	1/4-20	14.50	3600	.0240	6
13223	Brass, Blunt Edge	.300	.280	.750	.150	.440	.750	1/4-20	4.10	950	.0240	6
13224	Tool Steel, Knife Edge	.400	.450	1.000	.250	.710	1.000	3/8-16 x 1"	30.00	6,000	0.050	4
13225	Tool Steel, Blunt Edge	.400	.450	1.000	.250	.710	1.000	3/8-16 x 1"	30.00	6,000	0.050	4
13226	Tool Steel, Knife Edge	.600	.640	1.500	.375	.710	1.500	1/2-13 x 1 1/4"	108.30	12,000	0.075	2
13227	Tool Steel, Blunt Edge	.600	.640	1.500	.375	.710	1.500	1/2-13 x 1 1/4"	108.30	12,000	0.075	2

* Combination horizontal and vertical force.

Metric Lo-Profile Micro™ Clamps

Part Number	Description	A	B	C	D*	E	Clamp Width	Screw Size	Max. Holding Force (N)	Torque (Nm)	Total Throw	Clamps Per Package
13251	Tool Steel, Knife Edge	3.81	3.55	9.52	1.90		9.52	M2.5	2800	1.8	.190	8
13252	Tool Steel, Blunt Edge	3.81	3.55	9.52	1.90		9.52	M2.5	2800	1.8	.190	8
13253	Brass, Blunt Edge	3.81	3.55	9.52	1.90		9.52	M2.5	875	.56	.190	8
13261	Tool Steel, Knife Edge	5.08	4.75	12.70	2.54		12.70	M4	6600	5.6	.406	8
13262	Tool Steel, Blunt Edge	5.08	4.75	12.70	2.54		12.70	M4	6600	5.6	.406	8
13263	Brass, Blunt Edge	5.08	4.75	12.70	2.54		12.70	M4	1750	2.8	.406	8
13271	Tool Steel, Knife Edge	7.62	7.11	19.05	3.81		19.05	M6	16000	22.5	.610	6
13272	Tool Steel, Blunt Edge	7.62	7.11	19.05	3.81		19.05	M6	16000	22.5	.610	6
13273	Brass, Blunt Edge	7.62	7.11	19.05	3.81		19.05	M6	4200	5.6	.610	6
13274	Tool Steel, Knife Edge	10.16	11.43	25.40	6.350	18.03	25.40	M10 x 25mm	26,000	40.6	1.270	4
13275	Tool Steel, Blunt Edge	10.16	11.43	25.40	6.350	18.03	25.40	M10 x 25mm	26,000	40.6	1.270	4
13276	Tool Steel, Knife Edge	15.24	16.26	38.10	9.520	19.56	38.10	M12 x 30mm	50,000	145.0	1.900	2
13277	Tool Steel, Blunt Edge	15.24	16.26	38.10	9.520	19.56	38.10	M12 x 30mm	50,000	145.0	1.900	2

* Combination horizontal and vertical force.

Adjustable Micro™ Clamps

Measured from the centerline, each face of these low profile clamps increases 1mm (.0394) from the smallest to the largest face.

Adjustable Micro Clamps decrease design and set-up times for modular fixtures, work cubes, and standard fixtures. Without changing hole locations, clamping range from 12mm to 35mm can be achieved.

The clamps are available with either smooth or serrated faces which make them ideal for clamping machined parts, castings, and rough cut stock. The clamps work with a cam action, always following the contour of the workpiece for maximum surface contact.

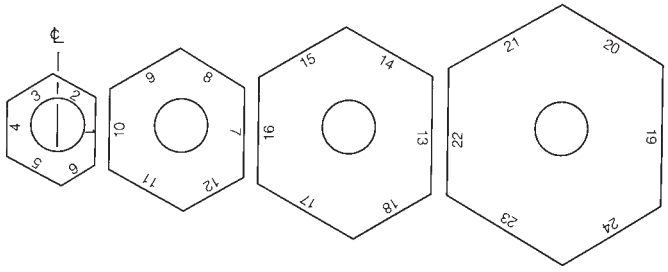

- Cam action
- Low profile
- Available in four sizes
- Heat treated and plated
- Serrated or smooth edges
- Adjustable clamps and stops
- Includes Cam Screw*

Face #	Distance From Center Line	Face #	Distance From Center Line	Face #	Distance From Center Line	Face #	Distance From Center Line
1	.....12mm (.4724)	7	.....18mm (.7086)	13	.....24mm (.9449)	19	.....30mm (1.1811)
2	.....13mm (.5118)	8	.....19mm (.7480)	14	.....25mm (.9842)	20	.....31mm (1.2205)
3	.....14mm (.5512)	9	.....20mm (.7874)	15	.....26mm (1.0236)	21	.....32mm (1.2598)
4	.....15mm (.5906)	10	.....21mm (.8268)	16	.....27mm (1.0630)	22	.....33mm (1.2992)
5	.....16mm (.6299)	11	.....22mm (.8661)	17	.....28mm (1.1024)	23	.....34mm (1.3386)
6	.....17mm (.6693)	12	.....23mm (.9055)	18	.....29mm (1.1417)	24	.....35mm (1.3780)

Locking Screw is 1/2-13 for inch sizes and 12M for metric sizes; total distance of movement is .100".

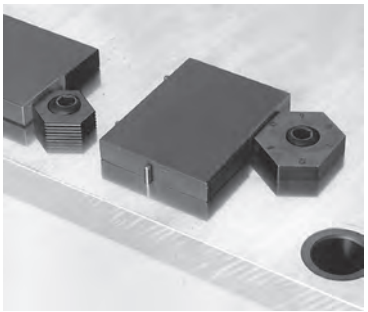

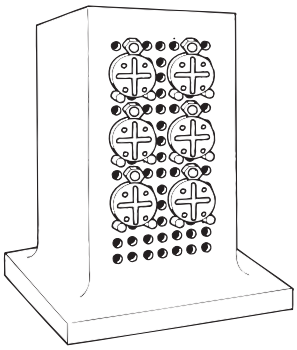

Inch Part Number	Metric Part Number	Description
68601	**68651**	1-6 smooth
68602	**68652**	7-12 smooth
68603	**68653**	13-18 smooth
68604	**68654**	19-24 smooth
68611	**68661**	1-6 serrated
68612	**68662**	7-12 serrated
68613	**68663**	13-18 serrated
68614	**68664**	19-24 serrated

All clamps include a cam screw.
Clamps are 10mm (.394) thick.

Part Number	Thread	Max. Torque Holding Force
68202	Cam Screw 1/2-13	65 Ft/lbs. – 4000 lbs.
68199	Cam Screw M12	88N.M. – 17,800 N.

ID Expansion Clamp

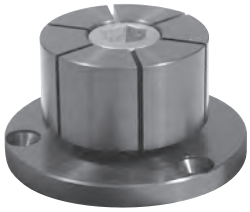

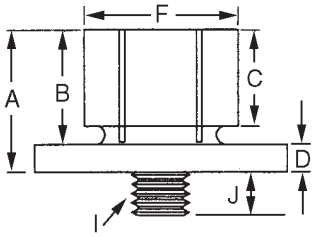

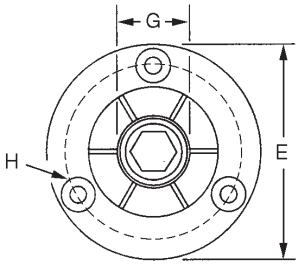

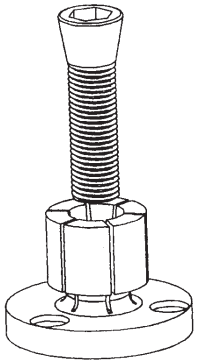

The ID expansion clamp is the ideal way to hold parts on an inside diameter for multiple machining on a vertical or horizontal machining center.

The larger diameter of the clamp is held to a close tolerance for precision locating in a machined pocket on work cubes and fixture plates.

The customer machines the mild steel clamp to match the bore of the part ensuring proper fit. Often times the clamps can be remachined for different size jobs.

- Body Material: Mild Steel
- Low Profile
- Ideal for Secondary Operations on Lathe Parts
- Easily Machined to Size on Lathe or Mill
- Excellent for Palletized Setups
- Allows More Parts Per Workcube or Fixture Plate
- Tighten with Hex Key or Hydraulic Pull Cylinders (Drill clearance hole for longer bolt into hydraulic cylinder)
- Instructions included with each clamp

Part Number	A	B	C	D	+.000 -.002 E	F	G*	H*	I	J	Torque (ft/lbs)	Holding Force (lbs)	Replacement Screw
68401	.42	.30	.24	.12	.787	.29	.16	2-56 on .540 BHC	2-56	.16	.05	250	68900
68402	.86	.63	.59	.23	1.170	.49	.28	6-32 on .825 BHC	8-32	.30	3.6	950	68901
68403	.98	.75	.59	.23	1.240	.56	.48	6-32 on .910 BHC	1/4-20	.50	13.3	1900	68902
68404	.98	.75	.59	.23	1.476	.79	.53	6-32 on 1.140 BHC	5/16-18	.56	27.6	2500	68903
68405	1.13	.88	.69	.25	1.968	1.06	.71	8-32 on 1.550 BHC	3/8-16	.71	49.3	4500	68904
68406	1.25	1.0	.81	.25	2.205	1.39	.90	8-32 on 1.790 BHC	1/2-13	.71	120.0	5900	68905
68407	1.56	1.25	1.06	.31	2.736	1.65	1.15	10-32 on 2.200 BHC	5/8-11	.79	224.0	10000	68906
68408	1.56	1.25	1.06	.31	2.972	2.03	1.15	10-32 on 2.515 BHC	5/8-11	.79	224.0	10000	68906
68409	1.79	1.48	1.27	.31	4.232	3.06	1.15	1/4-20 on 3.646 BHC	5/8-11	.79	224.0	10000	68907
68410	1.79	1.48	1.27	.31	5.232	4.06	1.15	1/4-20 on 4.648 BHC	5/8-11	.79	224.0	10000	68907
68411	1.79	1.48	1.27	.31	5.232	6.89	1.15	1/4-20 on 4.648 BHC	5/8-11	.79	224.0	10000	68907
68412	1.79	1.48	1.27	.31	6.000	9.85	1.15	1/4-20 on 5.250 BHC	5/8-11	.79	125.0	6000	68907

Metric

Part Number	A	B	C	D	+0.00 -0.05 E	F	G*	H*	I	J	Torque (Nm)	Holding Force (N.)	Replacement Screw
68829	10.7	7.6	6.1	3.0	20.0	7.4	4.1	M2 on 13.7 BHC	M2	4.1	.70	1,113	68909
68830	21.8	16.0	15.0	5.9	29.72	12.4	8.0	M3 on 20.95 BHC	M4	7.2	5.00	4,228	68910
68831	24.9	19.0	15.0	5.9	31.5	14.2	12.2	M3 on 23.1 BHC	M6	11.2	17.00	8,455	68911
68832	24.9	19.0	15.0	5.9	37.5	20.0	13.5	M3 on 29.0 BHC	M8	13.2	34.00	11,125	68912
68833	28.6	22.2	17.5	6.4	50.0	27.0	18.0	M4 on 39.4 BHC	M10	16.3	60.00	20,025	68913
68834	31.8	25.4	20.6	6.4	56.0	35.3	23.0	M4 on 45.5 BHC	M12	20.3	150.00	26,255	68914
68835	39.6	31.8	27.0	7.9	69.5	42.0	29.3	M5 on 55.9 BHC	M16	21.4	280.00	44,500	68915
68836	39.6	31.8	27.0	7.9	75.5	51.5	29.3	M5 on 63.9 BHC	M16	21.4	280.00	44,500	68915
68837	45.5	37.6	32.3	7.9	107.5	77.7	29.3	M6 on 92.6 BHC	M16	19.3	280.00	44,500	68917
68838	45.5	37.6	32.3	7.9	132.90	103.0	29.3	M6 on 188.06 BHC	M16	19.3	280.00	44,500	68916
68839	45.5	37.6	32.3	7.9	132.90	175.0	29.3	M6 on 188.06 BHC	M16	19.3	280.00	44,500	68916
68850	45.5	37.6	32.3	7.9	152.40	250.2	29.3	M6 on 133.35 BHC	M16	19.3	170.00	26,000	68916

* (3) Mounting Screws Included
* Minimum diameter the "F" dimension can be machined too.

Micro™ Clamps

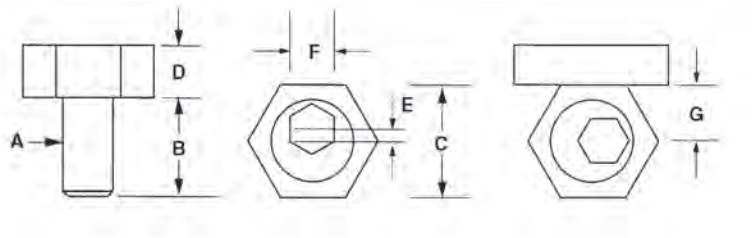

Jergens Micro™ Clamps feature both high hold down forces and low profiles, which makes them ideal for building fixtures on Ball Lock® fixturing plates. Two simple components make them work: a hardened steel socket cap screw with an offset head and a hexagonal washer. A half turn tightens or loosens the workpiece.

- Low profile makes computer programming easier
- Cam action provides fast, strong clamping
- Small size allows more parts per load
- Requires only a tapped hole in your fixture
- Available in stainless steel
- Note clockwise rotation recomended workpiece stop should be on the right of the Clamp.

Part Number Steel	Part Number Stainless	A	B	C	D	Total Distance of Measurement E	Key Size F	G*	Maximum Holding Force (lbs)
68501	–	8-32	.350	.312	.110	.030	5/64	.150	205
68502	–	10-32	.340	.500	.160	.040	3/32	.250	350
68503	**68513**	1/4-20	.470	.625	.190	.040	1/8	.308	800
68505		5/16-24	.460	.812	.190	.040	3/16	.400	750
68506	**68515**	5/16-18	.460	.812	.190	.040	3/16	.400	750
68507	–	3/8-16	.710	.812	.250	.050	3/16	.400	2,000
68509	–	1/2-13	.900	1.000	.375	.100	5/16	.500	4,000
68511	–	5/8-11	1.125	1.187	.500	.100	3/8	.590	6,000

* This measurement is the correct location to drill and tap the hole from the edge of the work piece.

Metric

Replacement Screws available, contact customer service for more information.

Part Number Steel	Part Number Stainless	A	B	C	D	Total Distance of Measurement E	Key Size F	G*	Maximum Holding Force (N)
68571	–	M4x0.7	9.6	7.93	2.8	.76	3	3.8	910
68572	**68551**	M6x1.0	11.2	15.86	4.75	1.01	4	7.8	3,558
68573	**68553**	M8x1.25	15.0	20.61	4.75	1.01	5	10.15	3,355
68574	–	M10x1.5	19.0	20.61	6.35	1.52	7	10.15	8,895
68575	–	M12x1.75	22.8	25.38	9.52	2.03	8	12.7	17,790
68576	–	M16x2.0	28.5	30.13	12.69	2.54	12	15.0	26,680

* This measurement is the correct location to drill and tap the hole from the edge of the work piece.

Knife Edge Clamps

Knife edge clamps can be used for clamping rough cut stock, castings, or any material that requires a hardened clamping element. Hardened steel, brass-plated.

Replacement Screws available, contact customer service for more information.

Part Number	A	B	C	D	E	F	G*	Torque (ft. lbs)	Max. Holding Force (lbs)
68547	3/8-16	3/16	0.812	0.250	0.050	0.710	0.400	16.6	2,000
68548	1/2-13	5/16	1.000	0.375	0.100	0.900	0.500	52.0	4,000
68549	5/8-11	3/8	1.187	0.500	0.100	1.125	0.590	80.0	6,000
Metric								**(Nm)**	**(N)**
68840	M10	7M	1.52	20.60	6.35	19.0	10.15	28	8,895
68841	M12	8M	2.03	25.40	9.52	22.8	12.70	88	17,790
68842	M16	12M	2.54	30.15	12.70	28.5	15.00	135	26,680

* This measurement is the correct location to drill and tap the hole from the edge of the work piece.

Expanding Micro™ Clamps

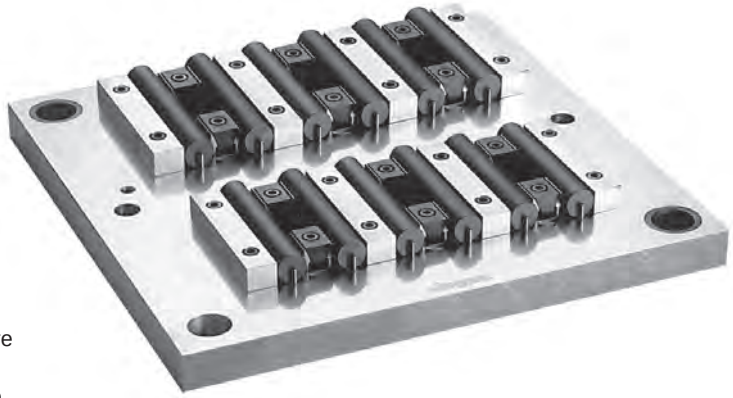

Jergens Expanding Micro Clamps allow you to fixture more parts on your fixture plates. The unique expanding design can hold two parts at once when used with a positive stop.

- Minimizes tool changes
- Holds two parts with equilateral clamping action
- Ideal for clamping flat or round work pieces
- Reduces wasted space
- Aluminum Housing, Steel Wedge

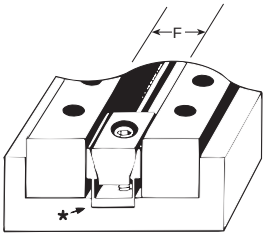

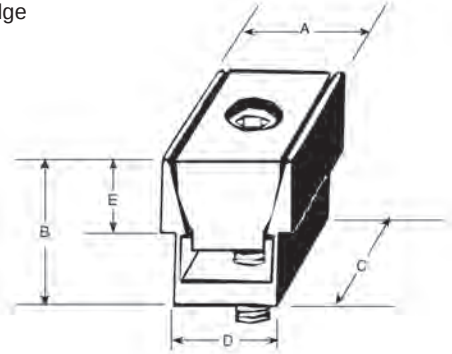

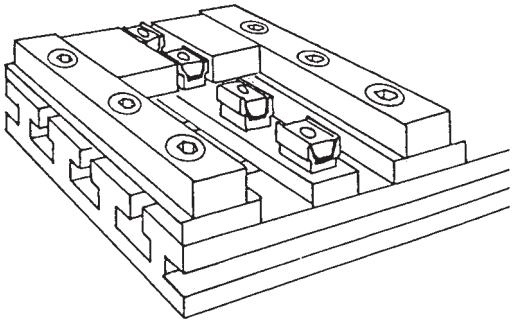

*A shallow slot, a little wider than D dimension, will insure clamp remains in line with workpiece.

Part Number	A	B	C	D*	E	F[1]	Thread Size	Maximum Spread	Maximum Holding Force (lbs)	Key Size
68706	.240	.250	.320	.210	.100	.250	2-56	.265	200	5/64
68707	.360	.380	.470	.310	.185	.375	4-40	.395	310	3/32
68701	.485	.500	.625	.410	.220	.500	8-32	.540	500	9/64
68702	.735	.750	.940	.632	.375	.750	1/4-20	.800	1500	3/16
68703	.980	1.00	1.250	.820	.500	1.000	5/16-18	1.060	2000	1/4
68704	1.470	1.50	1.875	1.215	.750	1.500	1/2-13	1.590	3500	3/8
68705	1.960	2.00	2.500	1.625	1.000	2.000	5/8-11	2.100	6000	1/2

Metric

Part Number	A	B	C	D*	E	F[1]	Thread Size	Maximum Spread	Maximum Holding Force (N)	Key Size
68716	6.1	6.9	8.1	5.3	3.6	6.4	M2	6.7	880	1.5
68717	9.1	9.7	11.9	7.9	4.7	9.5	M2.5	10	1,350	2
68711	12.3	14.5	15.9	10.4	5.6	12.7	M4	13.2	2,224	3
68712	18.6	19.0	23.8	16.1	9.5	19.0	M6	20.3	6,670	5
68713	24.8	25.9	31.7	20.8	12.7	25.4	M8	26.9	8,895	6
68714	37.3	38.6	47.6	30.8	19.0	38.1	M12	39.9	15,565	10
68715	49.7	51.5	63.5	41.2	25.4	50.8	M16	53.0	26,690	14

[1]F is the distance needed between workpieces for clamp clearance. Drill and tap mounting hole on the center of F dimension.

Machinable Expanding Micro™ Clamps

The compact Machinable Expanding Micro™ Clamp is available with extra material on the clamping jaw so it can be machined to conform to the shape of your workpiece – enabling you to fixture unusual applications easily. The specially designed steel wedge spreads the clamping force uniformly on both sides of the aluminum channel. Clamps may be ordered with a unique locking plate to make the clamp rigid while machining the jaw to your specifications, without vibration.

- Material: Channel 7075-76 Alumnium
- Mounting Screws Included
- Compact Design
- Allows more parts to be mounted on Fixture

NOTE: Locking plate is used only to machine jaws, remove to clamp workpiece.

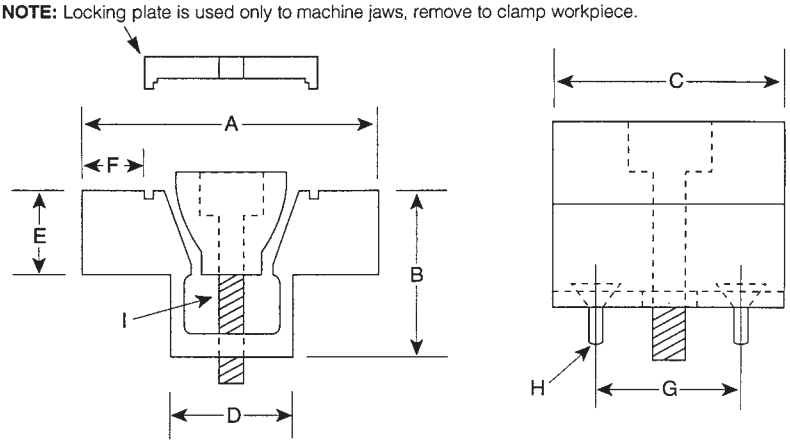

Part No. With Locking Plate	Part No. Without Locking Plate	A*	B	C	D	E	F†	G	Mounting Screw **H	I
68770	**68771**	1.125	0.50	0.62	0.420	0.18	0.18	0.400	2-56	8-32
68772	**68773**	1.500	0.75	0.94	0.632	0.37	0.26	0.624	6-32	1/4-20
68774	**68775**	2.000	1.00	1.25	0.820	0.50	0.39	0.812	6-32	5/16-18
68776	**68777**	3.000	1.50	1.87	1.215	0.75	0.62	1.200	10-32	1/2-13
68778	**68779**	4.000	2.00	2.50	1.625	1.00	0.80	1.625	1/4-20	5/8-11

* The distance needed between workpieces for clamp clearance, drill and tap mounting holes on the center of "A" dimension.
† The amount of machinable stock on jaws.
** Mounting Screws Included

Metric

Part No. With Locking Plate	Part No. Without Locking Plate	A*	B	C	D	E	F†	G	Mounting Screw **H	I
68870	**68871**	28.6	12.7	15.7	10.67	6.3	4.6	10.16	M2	M4
68872	**68873**	38.1	19.1	23.9	16.05	9.4	6.6	15.87	M4	M6
68874	**68875**	50.8	25.4	31.8	20.83	12.7	9.9	20.62	M4	M8
68876	**68877**	76.2	38.1	47.5	30.86	19.1	15.7	30.48	M5	M12
68878	**68879**	101.6	50.8	63.5	41.28	25.4	20.3	41.28	M6	M16

* The distance needed between workpieces for clamp clearance, drill and tap mounting holes on the center of "A" dimension.
† The amount of machinable stock on jaws.
** Mounting Screws Included

Micro™ Toe Clamps

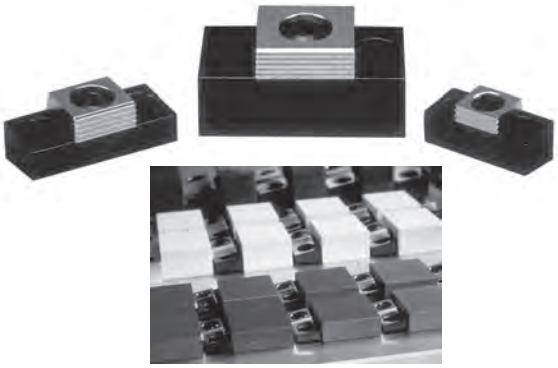

This cam action fixture clamp provides positive down force while using very little space on the fixture. Workpieces can be clamped in series by using the back surface of a clamp to locate the next workpiece. The hardened steel clamping element has both a smooth surface for machined workpieces and a serrated clamping surface for rougher work. The height of the clamp can be adjusted by milling the slot deeper in the fixture plate.

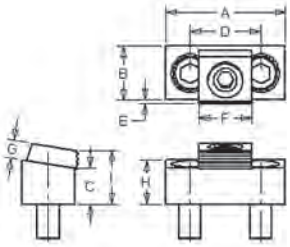

Part Number	A	B	C	D	E†	F	G	H	I	Cam Screw	Distance of Movement	Mounting Screws	Torque (ft/lbs)	Holding Force(lbs)
68731	1.70	.75	.50	1.00	.090	.75	.25	.62	.845	68527	.050	5/16-18 x 3/4 LH	20.8	2000
68732	2.12	1.00	.45	1.32	.110	1.00	.38	.62	.960	68529	.100	3/8-16 x 3/4 LH	65.0	4000
68733	2.95	1.50	.99	2.00	.130	1.50	.50	1.25	1.70	68531	.100	1/2-13 x 1 1/4 SHCS	100.0	6000

† "E" is the distance needed between the front of the clamp base and the workpiece.

Metric

Part Number	A	B	C	D	E†	F	G	H	Cam Screw	Distance of Movement	Mounting Screws Included	Torque (N-m)	Holding Force(N)
68781	43.2	19.0	12.7	25.4	2.3	19.0	6.4	15.75	M10	1.6	M8	28.0	8900
68782	54.0	25.4	11.4	33.5	2.8	25.4	9.7	15.75	M12	2.0	M10	88.0	17800
68783	75.0	38.1	25.2	50.8	3.3	38.1	12.7	2.5	M16		M12		

† "E" is the distance needed between the front of the clamp base and the workpiece.

Micro™ T-Slot Toe Clamps

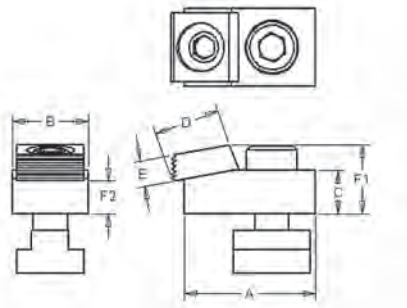

This clamp is like the Micro Toe Clamp, only it is designed to be used in the T-slots of machine tables. It provides positive down force while maintaining a low profile. The hardened steel clamping element has both a smooth surface for machined work pieces and a serrated clamping surface for rougher work.

Inch

Part Number	T-Slot Size	A	B	C	D	E	F¹	F²	Max. Torque/ Holding Force (Ft Lbs/Lbs)
68750	No T-nut or Mtg. Screw	1.94	1.12	0.62	1.00	0.38	1.00	0.875	65/4,000
68741	9/16	1.94	1.12	0.62	1.00	0.38	1.00	0.875	65/4,000
68742	5/8	1.94	1.12	0.62	1.00	0.38	1.00	0.875	65/4,000
68743	11/16	1.94	1.12	0.62	1.00	0.38	1.00	0.875	65/4,000
68744	3/4	1.94	1.12	0.62	1.00	0.38	1.00	0.875	65/4,000

Metric

Part Number	T-Slot Size	A	B	C	D	E	F¹	F²	Max Torque/ Holding Force (N.m./N.)
68791	14	50	28.5	15.7	25.4	9.6	25.4	22.2	88.00/17800
68792	16	50	28.5	15.7	25.4	9.6	25.4	22.2	88.00/17800
68793	18	50	28.5	15.7	25.4	9.6	25.4	22.2	88.00/17800
68794	No T-nut or Mtg. Screw	50	28.5	15.7	25.4	9.6	25.4	22.2	88.00/17800

F¹ - The distance from the top of the back of the washer to the bottom of the clamp body.
F² - The distance from the top of the front of the washer to the bottom of the clamp body.

Part Number	T-Slot Size
68750	No T-nut or Mtg. Screw
68741	9/16
68742	5/8
68743	11/16
68744	3/4

Metric

Part Number	T-Slot Size
68791	14
68792	16
68793	18
68794	No T-nut or Mtg. Screw

Torque mounting bolt to 110 Ft/Lbs (150 N.m.)

Micro™ Edge Clamps

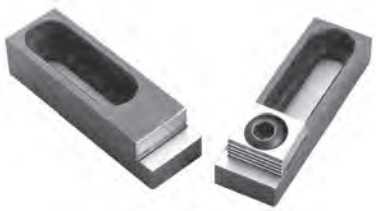

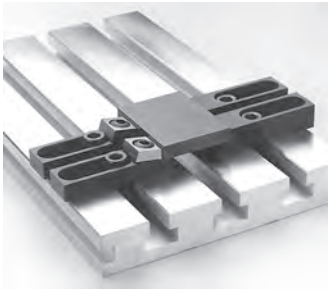

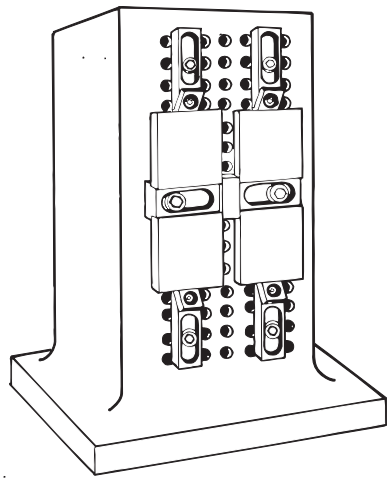

The Micro Edge Clamp offers increased versatility through its unique elevated clamping abilities.

- Workpiece is elevated for through milling and drilling
- Cam action provides positive holddown force
- Provides flexible set-ups for hard to hold parts
- Works in plates, both with tapped hole layouts or T-slot configurations
- Can be mounted vertically or horizontally
- Built-in stops locate workpiece for repeat positioning
- Larger sizes are ideal for mold shop applications
- Tapered mounting slot prevents movement when clamping pressure is applied
- Hardened steel clamping element, low carbon steel body

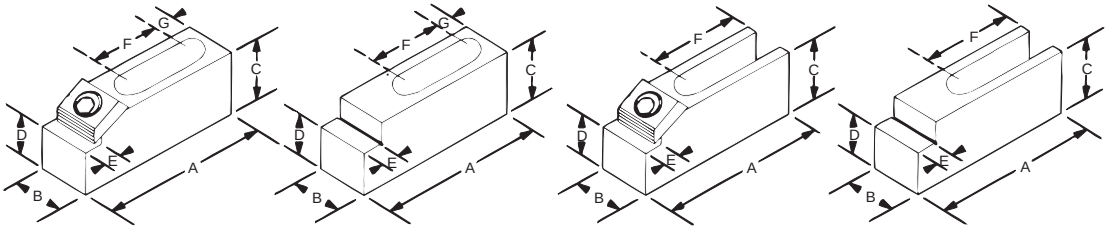

Closed slot style

Open slot style

Inch

Part Number	Item	A	B	C	+.0000 -.0005 D	E	F	G	Cam Screw Part Number	Mounting Screw	Slot
68721	Clamp	2.50	.75	.62	.4600	.31	.83	.53	68527	5/16	Closed
68722	Stop	2.50	.75	.75	.4600	.31	1.11	.53	N/A	5/16	Closed
68723	Clamp	3.75	1.12	.62	.4800	.37	1.68	.50	68529	1/2	Closed
68724	Stop	3.75	1.12	.87	.4800	.37	1.68	.50	N/A	1/2	Closed
68725	Clamp	4.21	1.50	1.62	1.3780	.37	1.82	N/A	68535	5/8	Open
68726	Stop	4.21	1.50	2.00	1.3780	.37	1.82	N/A	N/A	5/8	Open

Metric

Part Number	Item	A	B	C	+.0000 -.0130 D	E	F	G	Cam Screw Part Number	Mounting Screw	Slot
68821	Clamp	63.5	19.1	15.8	11.68	8.0	21.1	13.5	68532	M8	Closed
68822	Stop	63.5	19.1	19.1	11.68	8.0	28.2	13.5	NA	M8	Closed
68823	Clamp	95.3	28.5	15.8	12.19	9.4	42.7	12.7	68534	M12	Closed
68824	Stop	95.3	28.5	22.1	12.19	9.4	42.7	12.7	NA	M12	Closed
68825	Clamp	107.0	38.1	41.2	35.00	9.4	46.2	NA	68535	M16	Open
68826	Stop	107.0	38.1	50.8	35.00	9.4	46.2	NA	NA	M16	Open

Modular Mini Vise

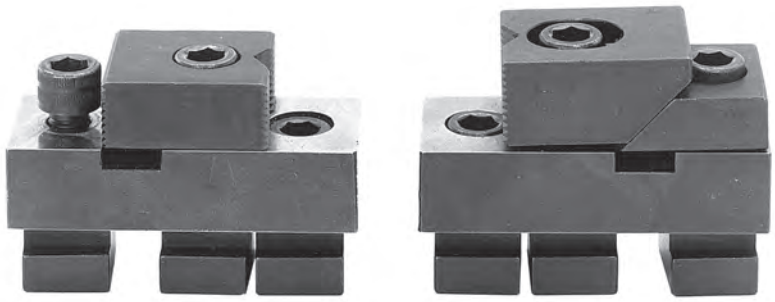

- Material: C-1018
- Finish: Black Oxide
  Case Hardened 58-62 Rc

Description	Part Number
Fixed Jaw Clamp	**46711**
Adj. Jaw Clamp	**46721**
T-Slot Nut	**46731**

The Jergens Modular Mini Vise provides accurate location and positive holding. The bases are hardened and ground to the same height as Jergens Rest Pads for accurate location. The jaws are serrated and hardened to provide positive holding. These versatile clamps may be used as shown, or the jaws may be reversed to allow the workpiece to rest on the machine table or fixture base. The clamps can be made part of a dedicated fixture by removing the T-nuts and fastening the 3/8-16" cap screws directly to the fixture.

To use the Jergens Modular Mini Vise: position the fixed jaw clamp and tighten all three cap screws to secure the clamp. Position the adjustable clamp and tighten the outside capscrews. Insert the workpiece and tighten the center cap screw. The adjustable jaw will force the workpiece down against the base and over against the fixed jaw clamp.

The 46711 clamp has a fixed jaw for locating.
The 46721 clamp has an adjustable jaw for clamping.
Each clamp is supplied with three 3/8-16" cap screws and three 46731 T-nuts.

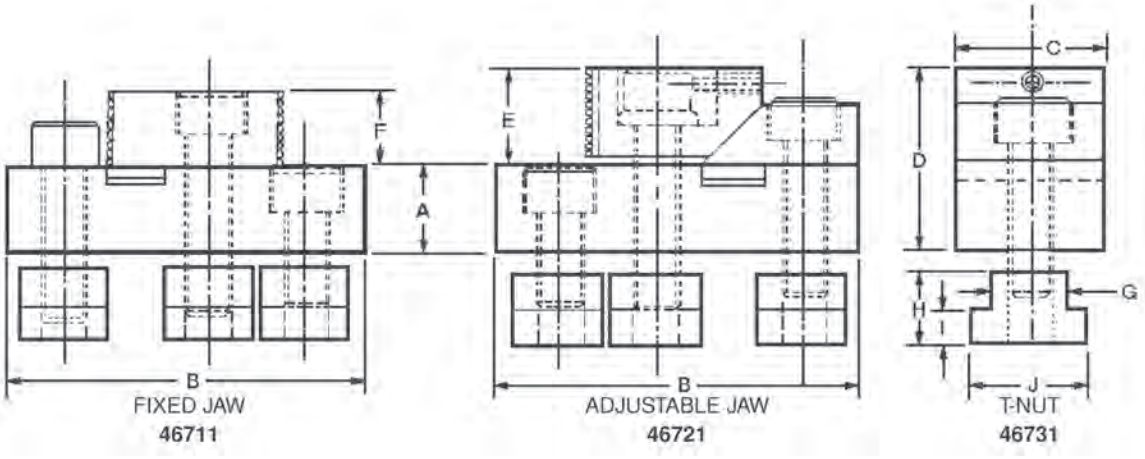

+.0000 -.0005 A	B	C	Maximum Height D	E	F	Table Slot G	H	I	J
.7205	3	1 1/4	1-9/16	3/4	5/8	5/8	5/8	11/32	1

We Are Jergens

WORKHOLDING SOLUTIONS

Support, Locate and Hold:

From standard components like toggle screws and T-bolts to vises and quick change fixture systems like Ball Lock® and ZPS.

SPECIALTY FASTENERS

Fasten, Strengthen and Secure:

From threaded inserts and Spinner-Grip™ Flange Nuts & Bolts to Kwik-Lok® Pins.

LIFTING SOLUTIONS

Lift, Turn and Track:

From chain sling and eye bolts to hoist rings and our proprietary Lift ID™ Automated Inspection and Compliance program.

We got our start back in 1942, manufacturing tooling components to help American manufacturers operate quickly and more efficiently. "The Standard Components with the Highest Standards:" This founding philosophy put Jergens on the forefront of the "lean manufacturing" movement before anyone even thought to put those two words together.

In the years since, Jergens has structured its offering to advance the cause of leaner manufacturing, adding products and engineered solutions for an integrated approach to "Manufacturing Efficiency."

You can find Jergens products just about anywhere in the manufacturing environment.

Jergens®
MANUFACTURING EFFICIENCY

Jergens®

MANUFACTURING EFFICIENCY

WORLD HEADQUARTERS USA

15700 S. Waterloo Road, Cleveland, OH 44110-3898 USA
877.426.2504 216.481.6193
workholding@jergensinc.com
www.jergensinc.com

WORKHOLDING SOLUTIONS

SPECIALTY FASTENERS

LIFTING SOLUTIONS

DISTRIBUTED BY:

AD0613

© Copyright Jergens, Inc. 2013

NMA PRECISION | PCMAI | ISA | AWS | ISO9001:2008 QUALITY SYSTEM CERTIFIED | CE