COMPONENTS FOR GUIDE LIFTERS

COMPONENTS FOR GUIDE LIFTERS

Product name Catalog No.	GUIDE LIFTER SETS GLS GLP GLS□ GL□	SPACERS LRB	GUIDE LIFTERS —DETACHABLE TYPE— GLR	—HEAVY-LOAD TYPE— AGL	GUIDE LIFTERS —SPRING HOLE TYPE— GLSZ
Page	719	720	721	721	722

LIFTER PINS —SPRING HOLE TYPE— LPAH	LIFTER PINS —SPRING HOLE AND PILOT PUNCH RELIEF HOLE TYPE— LHAH	BLOCK GUIDE LIFTERS—DETACHABLE TYPE— GLB	BLOCK GUIDE LIFTERS —FIXING-KEY TYPE— GLBK	GUIDE LIFTERS —AIR HOLE TYPE— GLJS
722	722	724	724	725

LIFTER PINS WITH AIR HOLES LJS	BLOCK LIFTER SETS BLS	BLOCK LIFTERS —DETACHABLE TYPE— BLR	LIFTER PIN SETS LPS LP LPH LPSH	LIFTER PINS —RESIN TYPE— JLP
725	726	726	727	728

LIFTER PIN SETS LHSH LHH	LIFTER PINS —PRECISION TYPE— LHHV	BLOCK LIFTERS —FIXING-KEY TYPE— BLL—□ BLH—□ BLLF—□	SPRING PLUNGERS PJ□・NPJ□
729	730	731	733

WRENCHES FOR PLUNGERS PJG BPJG	SPRING PLUNGERS -SUS TYPE- PJ□W・PJ□K	SPRING PLUNGERS FOR SLANTED SURFACES PJHZ	SPRING PLUNGERS PJLS PJFW PJLR PJHR	WRENCHES FOR HEX PINS PJRW
733 737	734	734	735	735

SPRING PLUNGERS WITH FLANGES FPJL FPJH	BALL PLUNGERS WITH FLANGES FBPJS FBPJ	BALL BUTTONS BBT	BALL PLUNGERS BP□・BS□・NB□J・NBPW・NBS□
736	736	736	737

KNOCKOUT PINS	PUSHING PINS	MATERIAL GUIDE UNITS —STANDARD TYPE—	MATERIAL GUIDE UNITS	MATERIAL GUIDE PLATES AND SPACER BLOCKS	FITTING GUIDES
KOP	JP JPW JPWH	ZGUA ZGUB	SUK—A SUK—B	SBM SBA SSB	FGK
738	738	739	741	743	744

■Variations of guide lifters and lifter pins

●Standard and configurable types are available.

The full length can be specified in 0.1mm increments (except for lifter pins with air holes) according to the height of the feeding line or the lower die. The material guide width and material thickness can also be specified in 0.1mm increments. Standardized stock parts are available for the sizes that are most frequently used. Guide lifters and lifter pin sets, and lifter pin sets with pilot punch relief holes, are sets which include a spring and screw plug, however the pins can also be ordered individually.

●Variations by function

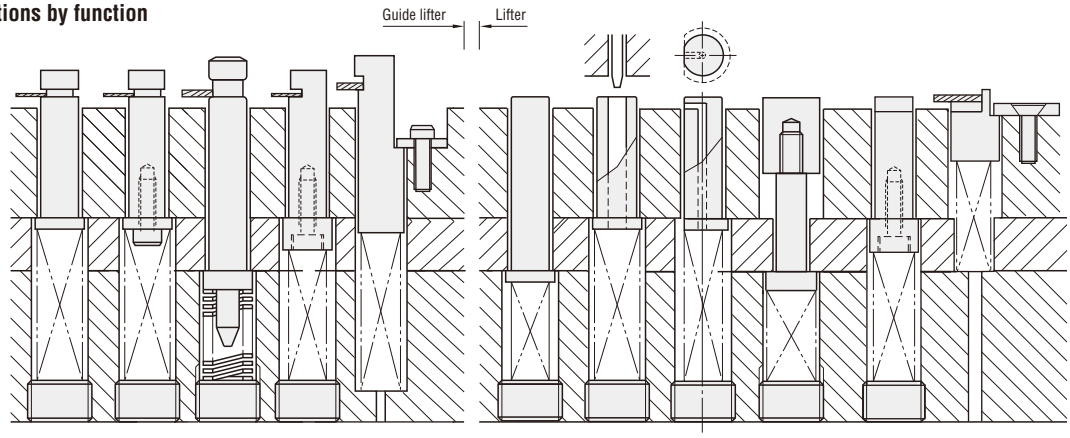

	①	④	⑤	⑥	⑦	⑧	⑨	⑩	⑪	⑫	⑬
Standard type	GLS (Set) GLP (Pin only)	—	—	—	—	LPS (Set) LP (Pin only)	—	LJS	BLS (Sets) BLB (Block only)	—	BL□—□
Configurable L dimension type	GLSH (Set) GLH (Pin only) GLSK (Set) GLK (Pin only)	GLR	AGL	GLB	GLBK	LPSH (Set) LPH (Pin only) JLP	LHSH (Set) LHH (Pin only) LHHV	—	—	BLR	—

① Guide lifter set P.719

This is the most popular type of guide lifter. With the configurable L dimension type, the guide width can also be specified in 0.1mm increments according to the thickness of the material.

② Guide lifter —Spring hole type— P.722

- The stroke length can be extended by inserting a spring into the guide lifter counterbore.
- This makes it possible to reduce the die height.

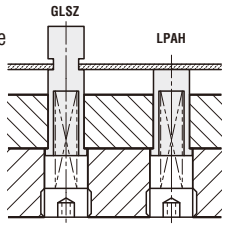

③ Guide lifters with air holes P.725

- Use a guide lifter with air hole to resolve problems arising from lack of space.
- A reliable jet of air can be blown from a short distance away.

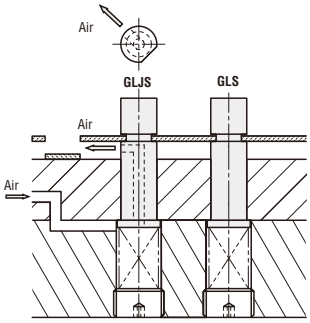

④ Guide lifters —Detachable type— P.721

Detachable type guide lifters are ideal for mass-production dies which require frequent regrinding and extra grinding allowance. Because the guide lifter is fixed by a washer instead of a flange, it can be detached easily.

⑤ **Guide lifters —Heavy-load type—** P.721

- Part A is rounded, preventing trouble such as scratching and scraping of materials.
- The flange thickness of 5 mm is thicker than the conventional type, making breakage of the flange less likely.
- Chamfering of part B makes it less likely that breakage will occur due to collisions with the stripper plate on one side.

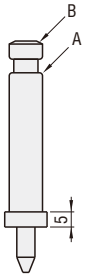

⑥ **Block guide lifters —Detachable type—** P.724

Because block guide lifters can lift a larger surface area of the material, they are more suitable than round guide lifters for precision dies, particularly when the material is thin.
The configurable guide width type allows a broad range of guide widths to be selected.

⑦ **Block guide lifter —Fixing-key type—** P.724

This lifter is fixed in place from the top by means of a key, making it easy to detach for maintenance.

⑧ **Lifter pin sets** P.727

This is the most popular type of lifter pin. With the configurable L dimension type, the full length can be specified in 0.1mm increments.

⑨ **Lifter pin sets —Pilot punch relief hole type—** P.729

When there is no space for installing the lifter pin, the space problem can be resolved by positioning the pin in the pilot punch relief hole.
This results in more compact dies and conservation of material width, as well as a reduction in machining man-hours.

⑩ **Lifter pins with air hole** P.725

These pins combine the lift function with an air-blow function. They are effective in blowing away products that have been cut off.

⑪ **Block lifter sets** P.726

- This product can be used when there is a gap hole where round lifter pins would get stuck, or when a side cut is removed at an intermediate process.

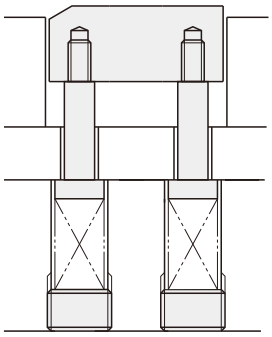

⑫ **Block lifters —Detachable type—** P.726

These products are ideal for mass-production dies which require frequent regrinding and extra grinding allowance.Because the guide lifter is fixed by a washer instead of a flange, it can be detached easily.

⑬ **Block lifters —Fixing-key type—** P.731

This type can be removed easily when regrinding of the die plate is performed, and does not require lift adjustment.

Example

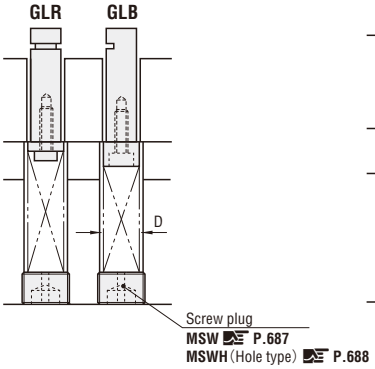

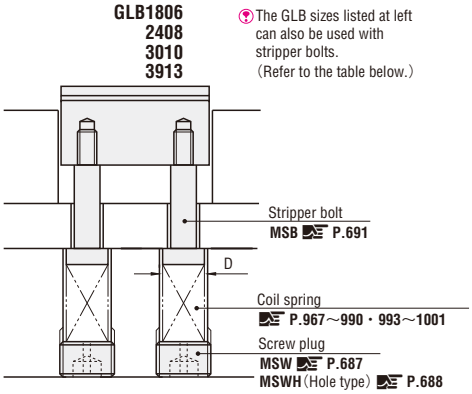

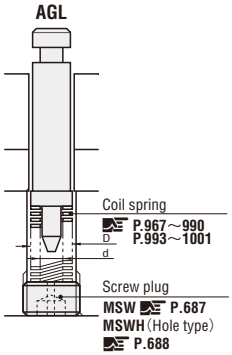

■Recommended coil springs and screw plugs

Guide lifter		Coil spring Type	Coil spring D	Screw plug
GLR6	——	WR	8	MSW10
GLR8	GLB 0505 GLB 0606	WF WL	10	MSW12
GLR10	GLB 0808	WT	13	MSW16
GLR13	GLB 1010	WM	16	MSW20
——	GLB 1313 3913	WH	18	MSW20

■Recommended coil springs, screw plugs, and stripper bolts

Guide lifter	Stripper bolt	Coil spring D	Screw plug
GLB1806	MSB4.5	8	MSW10
GLB2408 GLB3010	MSB5.5 MSB6	10	MSW12
GLB3913	MSB6.5	10	MSW12

■Recommended coil springs and screw plugs

Guide lifter	Coil spring Type	Coil spring D	Coil spring d	Screw plug
AGL13	SWU SWR SWS	14.5	8.5	MSW20
AGL16		17	10.5	MSW22
AGL20		21	13.5	MSW27
AGL25		26	16.5	MSW33

GUIDE LIFTER SETS

RoHS

Type	Catalog No.	Components ① Pin	② Spring	③ Screw
Standard	GLS	○	○	○
Configurable L・A dimensions	GLSH			
Standard	GLP	○		
Configurable L・A dimensions	GLH			

Type	Catalog No.	Components ① Pin	② Spring	③ Screw
Configurable L・A・E・W dimensions	GLSK	○	○	○
	GLK	○		

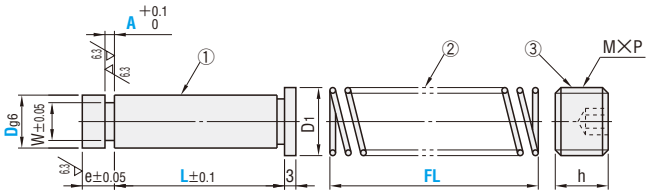

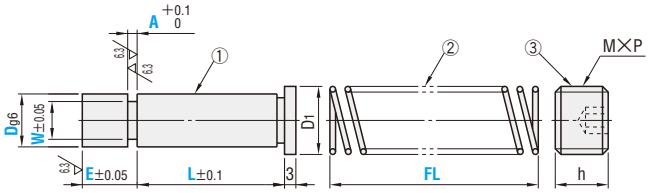

M SK4
H 53～58HRC (Annealing of head to max. 45HRC)

■Standard type

①GLP Dg6		e	W	D1	③MSW M×P	h	Catalog No. Type	D	L	A	②Spring Type	FL	Base unit price 1～19 pieces GLS	GLP
4	−0.004 −0.012	5	2.0	6	8×1.25	8	GLS ①②③ GLP ①	4	10 15 20 22 25 28 30 33 35 36 40 45 50	0.5 0.8 1.0	WR WF WL WT WM WH	20 25 30 35 40 45 50 55 60 65 70 80 90 100	Quotation	
6		7	3.6	8	10×1.5	10		6	10 15 20 22 25 28 30 33 35 36 40 45 50	0.5 0.8 1.0 1.6				
8	−0.005 −0.014		5.0	10	12×1.5			8	10 15 20 22 25 28 30 33 35 36 40 45 50 55 60	1.0 1.6 2.0				
10			6.0	13	16×1.5			10	20 22 25 28 30 33 35 36 40 45 50 55 60	1.6 2.0 2.5				
13	−0.006 −0.017		7.0	16	20×1.5	12		13	20 22 25 28 30 33 35 36 40 45 50 55 60	2.0 2.5 3.6				
16		12	8.0	19	22×1.5			16	30 33 35 36 40 45 50 55 60 70	2.0 2.5 4.0				
20	−0.007 −0.020		10.0	23	27×1.5			20	33 35 36 40 45 50 55 60 70	3.6 5.0	WL・WT WM・WH			

Springs ② are unavailable in certain types and sizes. Check the "Combinations of guide lifter pin and spring" table on the page at right.

■Configurable L・A dimension type

①GLH Dg6		e	W	D1	③MSW M×P	h	Catalog No. Type	D	0.1mm increments L	A	②Spring Type	FL	Base unit price 1～19 pieces GLSH	GLH
4	−0.004 −0.012	5	2.0	6	8×1.25	8	GLSH ①②③ GLH ①	4	10.0～ 55.0	0.5～2.0	WR WF WL WT WM WH	20 25 30 35 40 45 50 55 60 65 70 80 90 100	Quotation	
6		7	3.6	8	10×1.5	10		6	10.0～ 75.0	0.5～3.0				
8	−0.005 −0.014		5.0	10	12×1.5			8	10.0～ 75.0	0.7～4.5				
10			6.0	13	16×1.5			10	10.0～ 90.0	0.7～4.5				
13	−0.006 −0.017		7.0	16	20×1.5	12		13	10.0～ 90.0	1.0～6.0				
16		12	8.0	19	22×1.5			16	10.0～ 100.0	1.0～6.0				
20	−0.007 −0.020		10.0	23	27×1.5			20	15.0～ 100.0	1.0～6.0	WL WT WM WH			
25			13.0	28	33×1.5			25	15.0～ 100.0	1.0～6.0				

Springs ② are unavailable in certain types and sizes. Check the "Combinations of guide lifter pin and spring" table on the page at right.

■Configurable L・A・E・W dimension type

①GLK Dg6		D1	③MSW M×P	h	Catalog No. Type	D	0.1mm increments L	A	E	W	②Spring Type	FL	Base unit price 1～19 pieces GLSK	GLK
4	−0.004 −0.012	6	8×1.25	8	GLSK ①②③ GLK ①	4	15.0～45.0	0.5～2.0	5.0～10.0	1.5～ 2.2	WR WF WL WT WM WH	20 25 30 35 40 45 50 55 60 65 70 80 90 100	Quotation	
6		8	10×1.5	10		6	15.0～72.0	0.5～3.0	5.0～10.0	2.5～ 4.6				
8	−0.005 −0.014	10	12×1.5			8	15.0～72.0	0.7～4.5	5.0～10.0	3.5～ 6.0				
10		13	16×1.5			10	15.0～82.0	0.7～4.5	5.0～15.0	5.0～ 8.0				
13	−0.006 −0.017	16	20×1.5	12		13	20.0～82.0	1.0～6.0	5.0～15.0	6.0～11.0				
16		19	22×1.5			16	20.0～82.0	1.0～6.0	10.0～20.0	6.0～14.0				
20	−0.007 −0.020	23	27×1.5			20	20.0～82.0	1.0～6.0	10.0～20.0	10.0～18.0	WL WT WM WH			
25		28	33×1.5			25	20.0～82.0	1.0～6.0	10.0～20.0	13.0～22.0				

E≧A+2

Springs ② are unavailable in certain types and sizes. Check the "Combinations of guide lifter pin and spring" table on the page at right.

■②Coil springs 💡For detailed specifications, refer to P.994～.

D 6～D10…$D_{-0.5}^{0}$
D13～D27…$D_{-0.8}^{0}$

RoHS

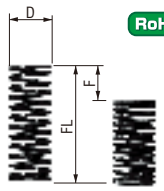

M SWP—A

■Spring constant table

① Pin Catalog No. Type	D	② Spring Type / D	WR	WF	WL	WT	WM	WH
GLS	4	6	N/mm 0.3 {kgf/mm} {0.03}	N/mm 0.5 {kgf/mm} {0.05}	N/mm 1.0 {kgf/mm} {0.1}	N/mm 2.0 {kgf/mm} {0.2}	N/mm 2.9 {kgf/mm} {0.3}	N/mm 5.9 {kgf/mm} {0.6}
GLSH	6	8						
GLSK	8	10						
	10	13						9.8 {1.0}
	13	16						
	16	18	0.5{0.05}	1.0{0.1}				
	20	22			2.9 {0.3}	3.9 {0.4}	4.9 {0.5}	14.7 {1.5}
	25	27						
Maximum allowable deflection Fmax.			F=L×60%	F=L×45%	F=L×40%	F=L×40%	F=L×35%	F=L×30%

●Load calculation method Load N {kgf}=Spring constant N/mm {kgf/mm}×Deflection Fmm ●Tolerance for spring constant: ±10%

■Combinations of guide lifter pins and springs (○ indicates an available set.)

Type・D / FL	GLS4・GLSH4・GLSK4						GLS6・GLSH6・GLSK6						GLS8・GLSH8・GLSK8						GLS10・GLSH10・GLSK10					
	WR6	WF6	WL6	WT6	WM6	WH6	WR8	WF8	WL8	WT8	WM8	WH8	WR10	WF10	WL10	WT10	WM10	WH10	WR13	WF13	WL13	WT13	WM13	WH13
20～40 (5mm increments)	○	○	○	○	○	○	○	○	○	○	○	○	○	○	○	○	○	○	○	○	○	○	○	○
45	○	○	○	○	○	○*	○	○	○	○	○	○	○	○	○	○	○	○	○	○	○	○	○	○
50	○	○	○	○	○	○*	○	○	○	○	○	○	○	○	○	○	○	○	○	○	○	○	○	○
55	○	○	○	○*	○	○*	○	○	○	○	○	○	○	○	○	○	○	○	○	○	○	○	○	○
60	○	○	○	○*	○*	○*	○	○	○	○	○	○	○	○	○	○	○	○	○	○	○	○	○	○
65	○	○	○	○*	○*	○*	○	○	○	○	○	○*	○	○	○	○	○	○	○	○	○	○	○	○
70	○	○	○	○*	○*	○*	○	○	○	○	○	○*	○	○	○	○	○	○	○	○	○	○	○	○
80	○	○	○	○*	○*		○	○	○	○	○		○	○	○	○	○	○	○	○	○	○	○	○
90																			○	○	○		○	

Type・D / FL	GLS13・GLSH13・GLSK13						GLS16・GLSH16・GLSK16						GLS20・GLSH20・GLSK20				GLSH25・GLSK25			
	WR16	WF16	WL16	WT16	WM16	WH16	WR18	WF18	WL18	WT18	WM18	WH18	WL22	WT22	WM22	WH22	WL27	WT27	WM27	WH27
20	○	○	○	○	○	○	○	○	○	○	○	○	○	○	○	○				
25	○	○	○	○	○	○	○	○	○	○	○	○	○	○	○	○				
30～70 (5mm increments)	○	○	○	○	○	○	○	○	○	○	○	○	○	○	○	○	○	○	○	○
80	○	○	○	○	○	○	○	○	○	○	○	○	○	○	○	○	○	○	○	○
90	○	○	○		○				○		○	○*	○		○	○*	○		○	○
100									○		○	○*	○		○	○*	○		○	○

💡 ＊…Maximum allowable deflection Fmax. is smaller than the above spring constant. For details P.994 ～ .

Order

Catalog No.	L	A	E	W	②(Type・FL)
GLS 8	30	2.0			WH40
GLP 6	25	1.6			
GLSH 6	25.0	2.4			WL35
GLH 13	60.0	3.0			
GLSK16	50.0	1.2	E15.0	W12.0	WM60
GLK20	45.5	1.5	E18.0	W14.0	

Days to Ship Quotation

Price Quotation

Alterations

Catalog No.	L	A	E	W	②	(KRC, etc.)
GLSH 8	30	2.0			WH40	KRC — GC
GLSK 10	35	0.8	E10	W7.0	WT45	KRC — WA

Alteration	Code	Spec.	1Code
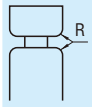	KRC	Chamfering of head upper and lower surfaces to R indicated at right 💡Can be used for GLSH・GLH・GLSK・GLK. D / R: 4・6 / 0.3; 8～13 / 0.5; 16・20 / 1.0; 25 / 1.5	
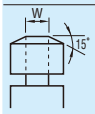	GC	Head taper (15°) machining 💡Can be used for GLSH・GLH・GLSK・GLK.	Quotation
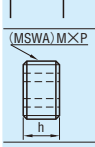	WA	Change of provided screw plug to MSWA (through hole type) 💡Can be used for GLSH・GLSK. For detailed dimensions P.687	
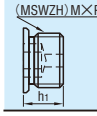	WZH	Change of provided screw plug to MSWZH (washer face type) 💡Can be used for GLSH・GLSK. Can be used for D6～25. MSW MSWZH D6～10 h=10→h1=12 D13～25 h=12→h1=15 For detailed dimensions P.687	

Example

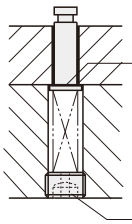

Washer for guide lifter (LRB)
P.684

Hole type screw plug
P.688 (MSWH, others)
💡Air and oil escape.

■Features (GLSK・GLK)

- Adjusting the E dimension makes it possible to machine a stripper plate through-hole.

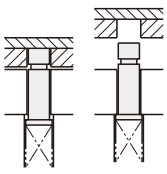

LRB RoHS
(Spacers for guide lifters)

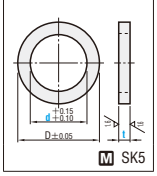

M SK5

D	d	Catalog No.	t
6	4	LRB 4	0.1
7	5	LRB 5	0.2
8	6	LRB 6	0.3
10	8	LRB 8	0.5
13	10	LRB 10	1.0
16	13	LRB 13	
19	16	LRB 16	
23	20	LRB 20	

For delivery and prices
P.684

GUIDE LIFTERS
—DETACHABLE TYPE·TYPE FOR HEAVY LOAD—

RoHS

GLR (Detachable type)

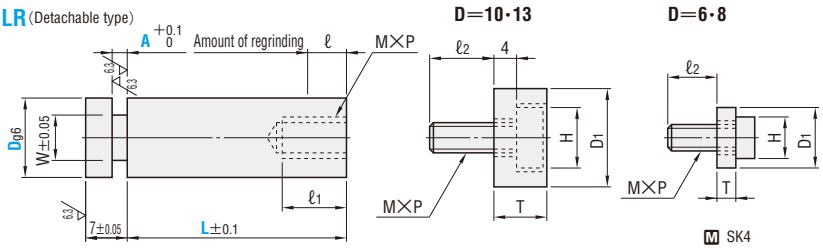

Recommended coil springs and screw plugs P.718

Dg6		W	D1	T	M×P	H	ℓ1	ℓ2	ℓ max	Catalog No. Type	D	0.1mm increments L	A	Base unit price 1～19 pieces
6	−0.004 −0.012	3.6	8	3	3×0.5	5.5	15	9	6	GLR	6	20.0～60.0	0.5～3.0	Quotation
8	−0.005	5.0	10		4×0.7	7.0					8		0.7～4.0	
10	−0.014	6.0	13	8			21	11	10		10	26.0～70.0		
13	−0.006 −0.017	7.0	16	9	5×0.8	8.5					13	26.0～80.0	1.0～6.0	

Alterations

Catalog No. — L — A(AC) — (KRC·WC, etc.)

GLR 10 — 40.0 — 2.5 — KRC
GLR 10 — 40.0 — AC5.1 — E12

Alteration	Code	Spec.	1Code
	KRC	Rounding of the head upper/lower surfaces D / R: 6 / 0.3; 8～13 / 0.5	Quotation
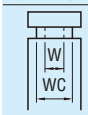	WC	Groove diameter change 0.1mm increments D / WC: 6 / 3.0～4.0; 8 / 4.5～6.0; 10 / 5.0～8.0; 13 / 6.0～11.0	

Alteration	Code	Spec.	1Code
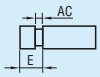	AC	Groove length change 0.1mm increments D / AC / E: 6 / 0.5～6.0 / 4.0～14.0; 8, 10 / 0.7～7.0 / 4.0～15.0; 13 / 1.0～10.0 / 5.0～20.0 E≧AC+2 L+E≦Lmax+7 For the specification procedure, refer to the example of an alteration order.	Quotation
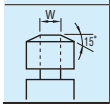	GC	Head taper (15°) machining	

RoHS

AGL (Heavy-load)

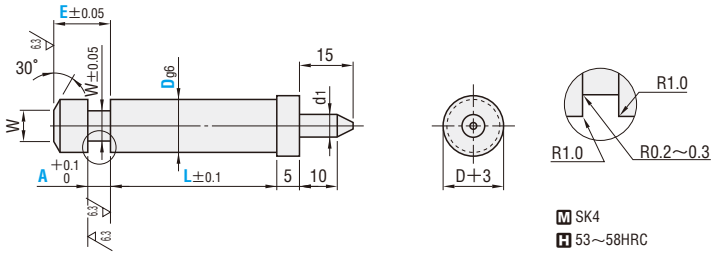

Recommended coil springs and screw plugs P.718

Dg6		W	d1	Catalog No. Type	D	0.1mm increments L	A	E	Base unit price 1～19 pieces
13	−0.006 −0.017	8	6	AGL	13	30.0～ 80.0	3.0～10.0	7.0～18.0	Quotation
16		10	9.5		16		3.0～12.0	10.0～20.0	
20	−0.007 −0.020	13			20	30.0～ 90.0	3.0～15.0	10.0～23.0	
25		16	12		25	30.0～ 100.0	3.0～18.0	12.0～25.0	

E—A—$\frac{(D-W)}{2}\tan 30^\circ \geqq 2$

Order

Catalog No. — L — A — E

GLR 10 — 40.0 — 2.5
AGL 13 — 40.0 — A4.0 — E10.0

Days to Ship Quotation

Price Quotation

Alterations

Catalog No. — L — A — E — (HC·WC)

AGL 13 — 40.0 — A4.0 — E10.0 — HC14

Alteration	Code	Spec.	1Code
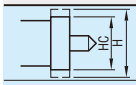	HC	Head diameter change D≦HC<(D+1) 0.1 mm increments	Quotation
	WC	Groove diameter change 0.1mm increments D / WC: 13 / 8.1～9.0; 16 / 10.1～12.0; 20 / 13.1～16.0; 25 / 16.1～20.0	

RoHS

GLSZ (Spring hole type)

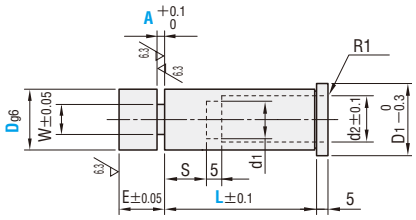

M SK4
H 53～58HRC
(Annealing of head to max. 45HRC)

Spring outer dia. (D)	Dg6		E	W	d1	d2	S	D1	Catalog No. Type	D	L	A	Base unit price 1～29 pieces
5・6	13	−0.006	7	7	6.5	8	10	16	GLSZ	13	30 35 40 45 50 55 60	2.0 2.5 3.6	Quotation
8・10	16	−0.017	12	8	10.5	11	10	19		16		2.0 2.5 4.0	
10～13	20	−0.007		10	13.5	14	12	23		20	40 45 50 55 60 65 70	3.6 4.0 5.0	
13～18	25	−0.020		11	18.5	19	15	28		25	40 45 50 55 60 65 70 75 80	3.6 4.0 5.0	
20～25	32	−0.009 −0.025	17	13	25.5	26	18	35		32		5.0 6.0 7.0	

RoHS

LPAH (Lifter pin, spring hole type)

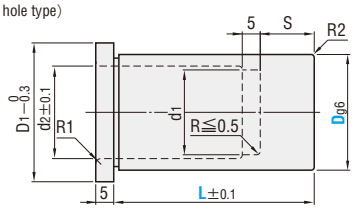

M SK4
H 53～58HRC
(Annealing of head to max. 45HRC)

Spring outer dia. (D)	Dg6		D1	d1	d2	S	Catalog No. Type	D	L	Base unit price 1～19 pieces
5・6	13	−0.006 −0.017	16	6	8	10	LPAH	13	30 35 40 45 50 55 60	Quotation
8・10	16		19	10	11	10		16		
10～13	20	−0.007 −0.020	23	13	14	12		20	40 45 50 55 60 65 70	
13～18	25		28	18	19	15		25	40 45 50 55 60 65 70 75 80	
20～25	32	−0.009 −0.025	35	25	26	18		32		

Alterations

Catalog No. — L(LC)
LPAH 20 — LC62.5

Alteration	Code	Spec.	1Code
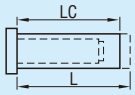	LC	L dimension change Lmin.−5≦LC<Lmax. LC=0.1mm increments S dimension is shortened by (L−LC).	Quotation

Example

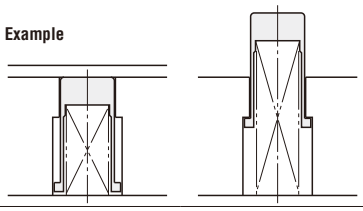

RoHS

LHAH (Lifter pin, spring hole type with pilot punch relief hole)

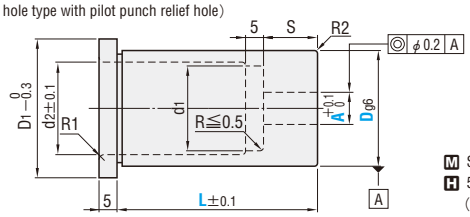

M SK4
H 53～58HRC
(Annealing of head to max. 45HRC)

Spring outer dia. (D)	Dg6		D1	d1	d2	S	Catalog No. Type	D	L	A 0.1mm increments	Base unit price 1～19 pieces
8・10	16	−0.006 −0.017	19	10	11	10	LHAH	16	30 40 45 50 55 60	8.0～ 9.0	Quotation
10～13	20	−0.007 −0.020	23	13	14	12		20	40 45 50 55 60 65 70	8.0～ 12.0	
13～18	25		28	18	19	15		25	40 45 50 55 60 65 70 75 80	8.0～ 16.0	
20～25	32	−0.009 −0.025	35	25	26	18		32		8.0～ 20.0	

Order

Catalog No. — L — A
GLSZ 16 — 50 — 2.5
LPAH 32 — 70
LHAH 32 — 70 — 10.0

Days to Ship Quotation

Price Quotation

BLOCK GUIDE LIFTERS
—DETACHABLE TYPE—

RoHS

GLB (Detachable type)

●When V=18・24・30・39

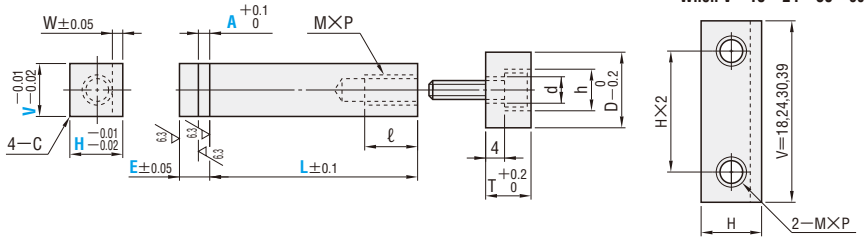

Recommended coil springs and screw plugs P.718

M SK4
H 53～58HRC

W	C	M×P	ℓ	D	d	T	h	Catalog No.	V	H	0.1mm increments L	0.1mm increments A	0.1mm increments E	Base unit price 1～19 pieces
1.5	0.5	3×0.5	9	10	4	7	6.5	GLB	5	5	20.0～60.0	0.5～3.6	5.0～15.0	Quotation
									6	6				
									18					
		4×0.7	12	14	5	8	8		8	8				
									24					
2.0	0.8								10	10				
									30					
2.5		5×0.8	15	18	6	9	9.5		13	13	26.0～80.0			
									39					

Order

Catalog No.	V	H	—	L	—	A	—	E
GLB	08	08	—	40.0	—	2.0	—	6.0

Days to Ship Quotation

Price Quotation

Alterations

Catalog No.	V	H	—	L	—	A	—	E	—	(WC)
GLB	08	08	—	40.0	—	2.0	—	6.0	—	WC2.0

Alteration	Code	Spec.	1Code
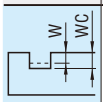	WC	W dimension change 0.1mm increments	Quotation

H	WC
5	1.0～1.5
6	1.0～2.0
8	1.0～3.0
10	1.0～3.5
13	1.5～4.5

BLOCK GUIDE LIFTERS
—FIXING-KEY TYPE—

RoHS

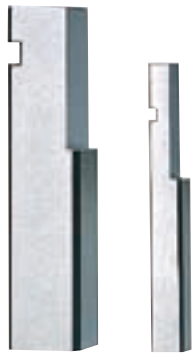

GLBK (Fixing-key type)

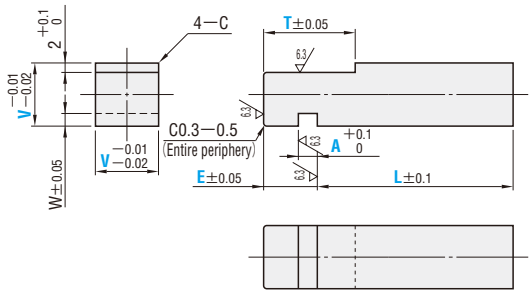

M SK4
H 53～58HRC

W	C	Catalog No. Type	V	5mm increments L	0.1mm increments A	E	T	Base unit price 1～19 pieces
1.5	0.5	GLBK	6	30～80	0.5～4.0	5.0～25.0	5.0～50.0 ※T≧E ※T≦(L+E)/2	Quotation
			8					
2.0	0.8		10					
2.5			13					

Order

Catalog No.	L	A	E	T
GLBK 8	35	2.3	8.6	20.5

Days to Ship Quotation

Price Quotation

Alterations

Catalog No.	L	A	E	T	(WC)
GLBK 8	35	1.0	8.6	20.5	WC2.0

Alteration	Code	Spec.	1Code
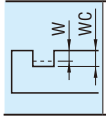	WC	W dimension change 0.1mm increments	Quotation

V	WC
6	1.0～2.0
8	1.0～3.0
10	1.0～3.5
13	1.5～4.5

■Features

Changing the T dimension allows the amount of lift to be adjusted.
In addition, adjusting the E dimension makes it possible to machine a stripper plate through-hole.

Example

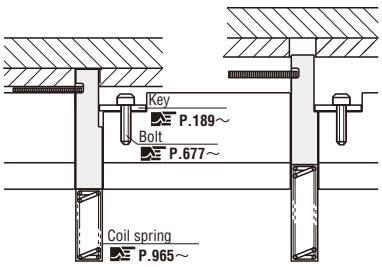

GUIDE LIFTERS / LIFTER PINS WITH AIR HOLES
—AIR HOLE TYPE—

RoHS

GLJS (Guide lifter with air hole)

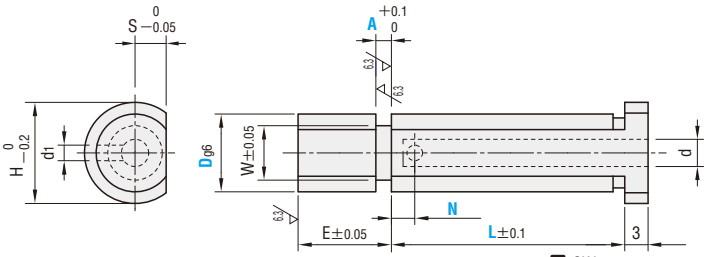

M SK4
H 53～58HRC
(Annealing of head to max. 45HRC)

The air hole is created on the side opposite the D-cut.

Dg6		W	H	E	d	d1	S	Catalog No. Type	D	L	N 1mm increments	A	Base unit price 1～29 pieces
4	−0.004 −0.012	2.0	6	5	2.0	1.5	1.75	GLJS	4	10 15 20 22 25 28 30 33 35 36 40 45 50	2≦N≦D−2	0.5 0.8 1.0	Quotation
6		3.6	8	7	2.5		2		6			0.5 0.8 1.0 1.6	
8	−0.005 −0.014	5.0	10		3.5	2.0	3		8	15 20 22 25 28 30 33 35 36 40 45 50 55		1.0 1.6 2.0	
10		6.0	13				4		10	20 22 25 28 30 33 35 36 40 45 50 55		1.6 2.0 2.5	
13	−0.006 −0.017	7.0	16		4.5	2.5	5		13			2.0 2.5 3.6	
16		8.0	19	12			6		16	30 33 35 36 40 45 50 55 60 70		2.0 2.5 4.0	

Order

Catalog No.	—	L	—	N	—	A
GLJS 8	—	30	—	3	—	1.6

Days to Ship Quotation

Price Quotation

Example

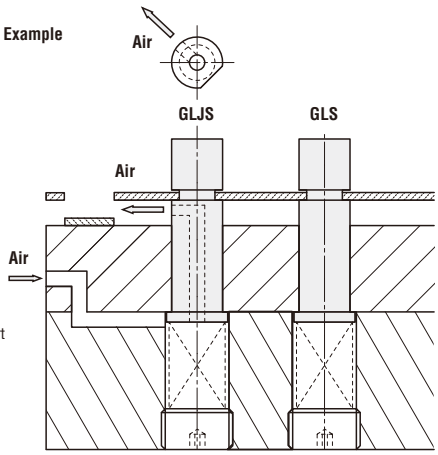

- Use a guide lifter with air hole to resolve problems arising from lack of space.
- A reliable jet of air can be blown from a short distance away.

RoHS

LJS (Lifter pin with air hole)

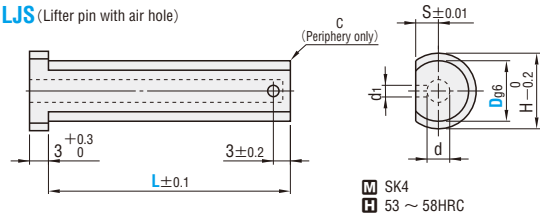

M SK4
H 53 ～ 58HRC

Recommended coil springs and screw plugs

Lifter pin	Coil spring Type	D	Screw plug
LJS 4	WF WL WM WH	6	MSW 8
LJS 6		8	MSW10
LJS 8		10	MSW12
LJS 10		13	MSW16

Dg6		H	d	d1	S	C	Catalog No. Type	D	L	Base unit price 1～19 pieces
4	−0.004 −0.012	6	2.0	1.5	1.75	0.3	LJS	4	25 28 30 34 40	Quotation
6		8	2.5		2			6		
8	−0.005 −0.014	10	3.5	2.0	3	0.5		8		
10		13			4			10		

Example

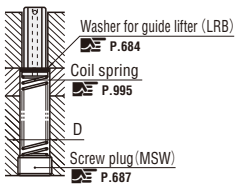

Order

Catalog No.	—	L
LJS 8	—	30

Days to Ship Quotation

Price Quotation

BLOCK LIFTER SETS / BLOCK LIFTERS
—DETACHABLE TYPE—

RoHS

Catalog No.	Components ①	②	③	④
BLS	○	○	○	○
BLB	○			

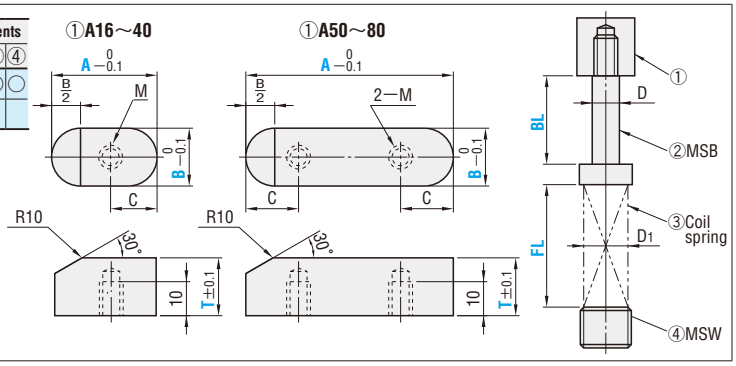

① M S50C

②MSB M	②MSB D	③ D1	④MSW M	Catalog No. Type	B \ C A	8 16	10 20	15 30	20 40	10 50	15 60	15 70	20 80	T	BL	③COIL SPRINGS Type	FL
5	6.5	10	12	BLS (①②③④)	8	○	○							16	15	WF	30
					10		○	○	○	○				20	20	WL	35
					13				○	○	○			22	25	WM	40
6	8	13	16	BLB (①)	16					○	○	○		25	30	WH	45
					20						○	○	○	28	35		50
															40		60
																	70

For details of ②, ③, and ④, refer to P.691 (MSB ②), P.995～(Coil springs ③), and P.687 (MSW ④).

Order

Catalog No.	A	T	BL	③
BLS 16	60	T20	BL25	WM30
BLB 13	50	T22		

Price Quotation

Days to Ship Quotation

Alterations

Catalog No.	A	T	BL	③	(WC)
BLS 16	60	T20	BL25	WM30	WC
BLB 13	50	T22			WC

Alteration	Code	Spec.	1Code
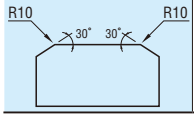	WC	Addition of taper to both sides	Quotation

B	A	Base unit price 1 ～ 19 pieces BLS	BLB
8	16		
	20		
10	20		
	30		
	40		
	50		
13	40		
	50		
	60		
16	50		
	60		
	70		
20	60		
	70		
	80		

Quotation

RoHS

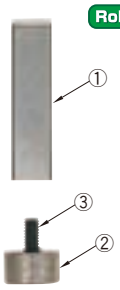

BLR (Detachable type)

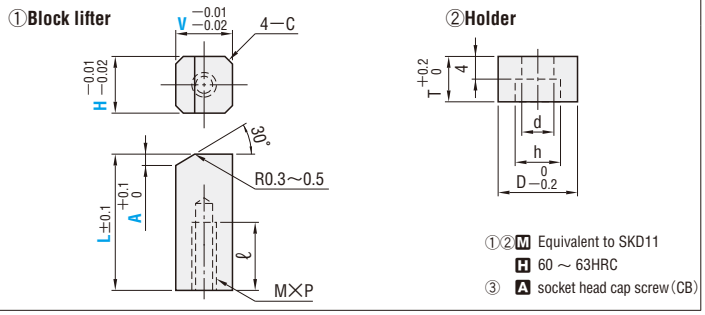

①② M Equivalent to SKD11
H 60 ～ 63HRC
③ A socket head cap screw (CB)

C	M×P	ℓ	D	d	T	h	③ Provided bolt	Catalog No.	V	H	L 0.1mm increments	A 0.1mm increments	Base unit price 1～19 pieces
0.5	3×0.5	9	10	4	7	6.5	CB3—10	BLR	6	6	20.0～60.0	0.5～3.6 ※V−1.73×A≧2	Quotation
	4×0.7	12	14	5	8	8	CB4—12		8	8			
0.8									10	10			
	5×0.8	15	18	6	9	9.5	CB5—15		13	13			

Order

Catalog No.	V	H	L	A
BLR	08	08	40.0	1.5

Price Quotation

Days to Ship Quotation

Example P.717

LIFTER PIN SETS / LIFTER PINS
—RESIN TYPE—

RoHS

Type	Catalog No.	Components ① Pin	② Spring	③ Screw
Standard	LPS	○	○	○
Configurable L dimension	LPSH			
Standard	LP	○		
Configurable L dimension	LPH			

The heads of LPS and LP are finished by buffing. For LPSH and LPH, use alterations.

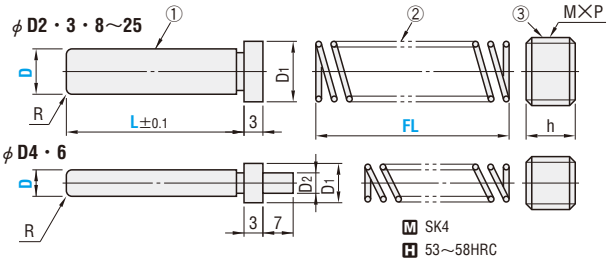

■Standard type

①LP D	D1	D2	R	③MSW M×P	h	Catalog No. Type	D	L	②SPRINGS Type	FL	Base unit price 1~19 pieces LPS	LP
2 (0 −0.05)	3	—	0.3	4×0.7	4	LPS ①②③ / LP ①	2	10 15	WR・WF WL・WT	20 25 30 35 40	Quotation	
3	4			5×0.8	5		3	10 15 20 22 25 28 30 33 35 36 40	WR WF WL WT WM WH	20 25 30 35 40 45 50 55 60 65 70 80 90 100		
4	6	3		8×1.25	8		4	10 15 20 22 25 28 30 33 35 36 40 45 50				
6	8	4.6		10×1.5	10		6	10 15 20 22 25 28 30 33 35 36 40 45 50 55 60				
8	10	—	0.5	12×1.5			8	10 15 20 22 25 28 30 33 35 36 40 45 50 55 60				
10	13			16×1.5			10	20 22 25 28 30 33 35 36 40 45 50 55 60				
13	16		2.0	20×1.5	12		13	20 22 25 28 30 33 35 36 40 45 50 55 60				
16	19			22×1.5			16	30 33 35 36 40 45 50 55 60 70				
20	23			27×1.5			20	30 33 35 36 40 45 50 55 60 70	WL・WT WM・WH			

Springs ② are unavailable in certain types and sizes. Check the "Combinations of guide lifter pin and spring" table on the page at right.

■Configurable L dimension type

①LPH D_{g6}	D1	D2	R	③MSW M×P	h	Catalog No. Type	D	L 0.1mm increments	②SPRINGS Type	FL	Base unit price 1~19 pieces LPSH	LPH
2 −0.002 −0.008	3	—	0.3	4×0.7	4	LPSH ①②③ / LPH ①	2	10.0～ 40.0	WR・WF WL・WT	20 25 30 35 40	Quotation	
3	4	—		5×0.8	5		3	10.0～ 50.0	WR WF WL WT WM WH	20 25 30 35 40 45 50 55 60 65 70 80 90 100		
4 −0.004 −0.012	6	3	0.5	8×1.25	8		4	10.0～ 50.0				
6	8	4.6		10×1.5	10		6	10.0～ 60.0				
8 −0.005 −0.014	10	—		12×1.5			8	10.0～ 80.0				
10	13			16×1.5			10	10.0～ 80.0				
13 −0.006 −0.017	16		2.0	20×1.5	12		13	20.0～ 90.0				
16	19			22×1.5			16	20.0～ 100.0				
20 −0.007 −0.020	23			27×1.5			20	25.0～ 100.0	WL WT WM WH			
25	28			33×1.5			25	30.0～ 100.0				

Springs ② are unavailable in certain types and sizes. Check the "Combinations of guide lifter pin and spring" table on the page at right.

Order

Catalog No.	—	L	—	②Type・FL
LPS 10	—	30	—	WH 50
LP 8	—	28		
LPSH 13	—	35.0	—	WM 60
LPH 13	—	65.0		

Days to Ship Quotation

Price Quotation

Alterations

Catalog No.	—	L	—	②Type・FL	— (SC, etc.)
LPSH 13	—	35.0	—	WM60	— SC

Only alterations **LPSH and LPH** can be used.
Express T and A cannot be used.

Alteration	Code	Spec.	1Code
0.2	SC	Buffing of pin end	Quotation
0.15	VSC	Lapping of pin end	
R=D/2	RC	Spherical machining of pin end Cannot be combined with VSC.	

Alteration	Code	Spec.	1Code
30° X YC L	YC	Taper machining of pin end YC: 0.1mm increments $0.3 \leqq YC \leqq \frac{D}{2}$ Lmin.≦L−YC X≒D−1.2×YC Cannot be used for D2・3. Cannot be combined with RC.	Quotation
	SN	Elimination of the spring guide (D_2 dimension) Can be used for D4・6.	
(MSWA) M×P h	WA	Change of provided screw plug to MSWA (through hole type) Can be used for LPSH D4～25 only. Detailed dimensions P.687	
(MSWZH) M×P h h1	WZH	Change of provided screw plug to MSWZH (washer face type) Can be used for LPSH D6～25 only. MSW MSWZH D6～10 h=10→h1=12 D13～25 h=12→h1=15 Detailed dimensions P.687	

■②Coil springs

For detailed specifications, refer to P.994～.

D 3～D10 …$D_{-0.5}^{0}$

D13～D27 …$D_{-0.8}^{0}$

RoHS

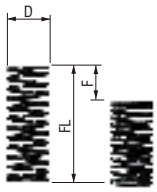

M SWP—A

■Spring constant table

① Pin Catalog No. Type	D	② Spring D \ Type	WR	WF	WL	WT	WM	WH
LPS LPSH	2	3	N/mm 0.3 {kgf/mm} {0.03}	N/mm 0.5 {kgf/mm} {0.05}	N/mm 1.0 {kgf/mm} {0.1}	1.5{0.15}	2.0{0.2}	2.9{0.3}
	3	4				N/mm 2.0 {kgf/mm} {0.2}	N/mm 2.9 {kgf/mm} {0.3}	N/mm 5.9 {kgf/mm} {0.6}
	4	6						
	6	8						9.8 {1.0}
	8	10						
	10	13						
	13	16						
	16	18	0.5{0.05}	1.0{0.1}	2.9 {0.3}	3.9 {0.4}	4.9 {0.5}	14.7 {1.5}
	20	22						
	25	27						
Maximum allowable deflection Fmax.			F=L×60%	F=L×45%	F=L×40%	F=L×40%	F=L×35%	F=L×30%

●Load calculation method Load N {kgf} =Spring constant N/mm {kgf/mm} × Deflection Fmm ● Tolerance for spring constant: ±10%

■Combinations of guide lifter pins and springs (○ indicates an available set.)

FL \ Type・D	LPS2・LPSH2					LPS3・LPSH3					
	WR3	WF3	WL3	WT3	WM3	WR4	WF4	WL4	WT4	WM4	WH4
20	○	○	○	○	○	○	○	○	○	○	○
25	○	○	○	○		○	○	○	○	○	○
30	○	○	○			○	○	○	○	○	○
35	○	○	○			○	○	○	○	○	
40	○	○	○			○	○	○	○	○*	
45						○	○	○			
50						○	○	○			
55						○	○	○			
60						○	○	○			
65						○	○				
70						○	○				
80											

FL \ Type・D	LPS4・LPSH4						LPS6・LPSH6					
	WR6	WF6	WL6	WT6	WM6	WH6	WR8	WF8	WL8	WT8	WM8	WH8
20	○	○	○	○	○	○	○	○	○	○	○	○
25	○	○	○	○	○	○	○	○	○	○	○	○
30	○	○	○	○	○	○	○	○	○	○	○	○
35	○	○	○	○	○	○	○	○	○	○	○	○
40	○	○	○	○	○	○	○	○	○	○	○	○
45	○	○	○	○	○	○*	○	○	○	○	○	○
50	○	○	○	○	○	○*	○	○	○	○	○	○
55	○	○	○	○*	○	○*	○	○	○	○	○	○
60	○	○	○	○*	○*	○*	○	○	○	○	○	○
65	○	○	○	○*	○*	○*	○	○	○	○	○	○*
70	○	○	○	○*	○*	○*	○	○	○	○	○	○*
80	○	○	○	○*	○*		○	○	○	○	○	

FL \ Type・D	LPS8・LPSH8					
	WR10	WF10	WL10	WT10	WM10	WH10
20	○	○	○	○	○	○
25	○	○	○	○	○	○
30	○	○	○	○	○	○
35	○	○	○	○	○	○
40	○	○	○	○	○	○
45	○	○	○	○	○	○
50	○	○	○	○	○	○
55	○	○	○	○	○	○
60	○	○	○	○	○	○
65	○	○	○	○	○	○
70	○	○	○	○	○	○
80	○	○	○	○	○	○

FL \ Type・D	LPS10・LPSH10						LPS13・LPSH13					
	WR13	WF13	WL13	WT13	WM13	WH13	WR16	WF16	WL16	WT16	WM16	WH16
20	○	○	○	○	○	○	○	○	○	○	○	○
25	○	○	○	○	○	○	○	○	○	○	○	○
30～70 (5mm increments)	○	○	○	○	○	○	○	○	○	○	○	○
80	○	○	○	○	○	○	○	○	○	○	○	○
90	○	○	○		○		○	○	○		○	
100												

FL \ Type・D	LPS16・LPSH16						LPS20・LPSH20				LPSH25			
	WR18	WF18	WL18	WT18	WM18	WH18	WL22	WT22	WM22	WH22	WL27	WT27	WM27	WH27
20	○	○	○	○	○	○	○	○	○	○				
25	○	○	○	○	○	○	○	○	○	○				
30～70 (5mm increments)	○	○	○	○	○	○	○	○	○	○	○	○	○	○
80	○	○	○	○	○	○	○	○	○	○	○	○	○	○
90			○		○	○*	○		○	○*	○		○	○
100			○		○	○*	○		○	○*	○		○	○

＊: Maximum allowable deflection Fmax. is smaller than the above spring constant. For details P.994～.

■Lifter pins —Resin type—

RoHS

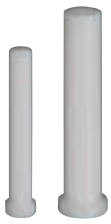

JLP

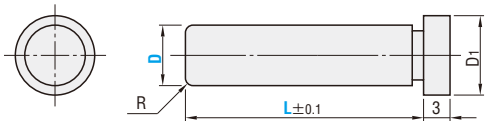

M Polyacetal resin (POM)

D		D_1	R	Catalog No. Type	D	L 0.1mm increments	Base unit price 1～19 pieces
2	$0_{-0.05}$	3	0.3	JLP	2	10.0～30.0	Quotation
3		4			3	10.0～30.0	
4		6			4	10.0～40.0	
6		8			6	10.0～50.0	
8		10	0.5		8	10.0～60.0	
10		13			10	10.0～60.0	

		Catalog No.	—	L
Order		JLP 3	—	15.5
Days to Ship	Quotation			
Price	Quotation			

LIFTER PIN SETS
—WITH PILOT PUNCH RELIEF HOLES—

RoHS

Catalog No.	Components ① Pin	② Spring	③ Screw
LHSH	○	○	○
LHH	○		

φD4・6

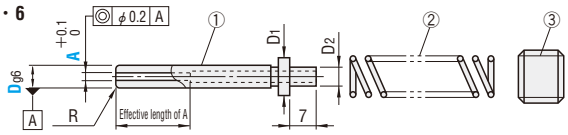

φD3・5・8・10・13・16・20

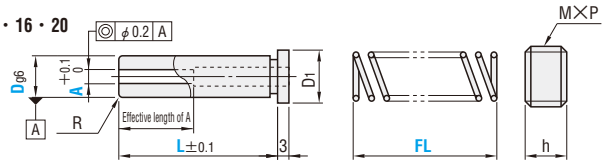

M SK4
H 53～58HRC
(Annealing of head to max. 45HRC)

①LHH Dg6		D1	D2	min. effective length of A	R	③MSW M×P	h	Catalog No. Type	D	0.1mm increments L	A	②Spring Type	FL	Base unit price 1～19 pieces LHSH	LHH
3	−0.002 −0.008	4	—	2	0.3	5×0.8	5	LHSH (①②③) LHH (①)	3	20.0～30.0	0.8～1.4 (0.1mm increments)	WR WF WL WT WM WH	20 25 30 35 40 45 50 55 60 65 70 80 90 100	Quotation	
4	−0.004 −0.012	6	3	2		8×1.25	8		4	20.0～50.0	1.0～2.3 (0.1mm increments)				
5		7	—	3					5	20.0～50.0	1.4～3.0 (0.1mm increments)				
6		8	4.6			10×1.5	10		6	20.0～50.0	1.4～3.5 (0.1mm increments)				
8	−0.005 −0.014	10	—	4	0.5	12×1.5			8	20.0～50.0	1.4～5.3 (0.3mm increments)				
10		13		5		16×1.5			10	20.0～60.0	1.4～5.3 (0.3mm increments) 5.5 5.8 6.0 6.3 6.8 (Selection)				
13	−0.006 −0.017	16		6		20×1.5	12		13	20.0～60.0	1.8～9.3 (0.5mm increments)				
16		19		8		22×1.5			16	20.0～60.0*	2.0～11.5 (0.5mm increments)				
20	−0.007 −0.020	23		10		27×1.5			20	20.0～60.0*	2.0～15.5 (0.5mm increments)	WL WT WM WH			

Springs ② are unavailable in certain types and sizes. Check the "Combinations of guide lifter pin and spring" table on the page at right.
＊If D=16・20 and L=20.0～30.0, the effective length of A may be equal to the L dimension.

Order

Catalog No.	L	A	②Type・FL
LHSH 6	22.0	2.3	WM40
LHH 8	35.0	3.5	

Days to Ship Quotation

Price Quotation

Alterations

Catalog No.	L	A(AC)	②	(VSC・SN, etc.)
LHSH 13	50	AC2.1	WM60	VSC

Alteration	Code	Spec.	1Code
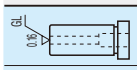	VSC	Lapping of pin end	Quotation
	AC	A dimension changed to 0.1mm increments Amin.＜AC＜Amax. Can be used for D8～20.	
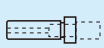	SN	Elimination of spring guide (D2=0) Can be used for D4・6.	
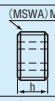	WA	Change of provided screw plug to MSWA (through hole type) Can be used for LHSH only.D4～20 Detailed dimensions P.687	
	WZH	Change of provided screw plug to MSWZH (washer face type) Can be used for LHSH D6～20 only. MSW MSWZH D6～10 h=10→h1=12 D13～20 h=12→h1=15 Detailed dimensions P.687	

Example

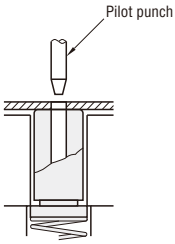

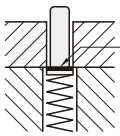

Washer for guide lifter (LRB) P.684

■② Coil springs

For detailed specifications, refer to P.994～.

D 4～D10 ··· $D_{-0.5}^{0}$
D13～D22 ··· $D_{-0.8}^{0}$

RoHS

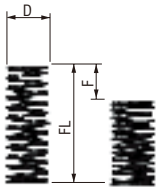

M SWP—A

■Spring constant table

① Pin Catalog No. Type	D	D \ Type	② Spring WR	WF	WL	WT	WM	WH
LHSH	3	4	N/mm 0.3 {kgf/mm} {0.03}	N/mm 0.5 {kgf/mm} {0.05}	N/mm 1.0 {kgf/mm} {0.1}	1.5{0.15}	2.0{0.2}	2.9{0.3}
	4	6				N/mm 2.0 {kgf/mm} {0.2}	N/mm 2.9 {kgf/mm} {0.3}	N/mm 5.9 {kgf/mm} {0.6}
	5	6						
	6	8						
	8	10						
	10	13						9.8 {1.0}
	13	16						
	16	18	0.5{0.05}	1.0{0.1}	2.9 {0.3}	3.9 {0.4}	4.9 {0.5}	14.7 {1.5}
	20	22						
Maximum allowable deflection Fmax.			F=L×60%	F=L×45%	F=L×40%	F=L×40%	F=L×35%	F=L×30%

●Load calculation method Load N {kgf} =Spring constant N/mm {kgf/mm} ×Deflection Fmm ● Tolerance for spring constant: ±10%

■Combinations of guide lifter pins and springs (○ indicates an available set.)

FL \ Type·D	LHSH3 WR4	WF4	WL4	WT4	WM4	WH4	LHSH4·LHSH5 WR6	WF6	WL6	WT6	WM6	WH6	LHSH6 WR8	WF8	WL8	WT8	WM8	WH8	LHSH8 WR10	WF10	WL10	WT10	WM10	WH10
20·25·30	○	○	○	○	○	○	○	○	○	○	○	○	○	○	○	○	○	○	○	○	○	○	○	○
35	○	○	○	○	○		○	○	○	○	○	○	○	○	○	○	○	○	○	○	○	○	○	○
40	○	○	○	○	○*		○	○	○	○	○	○	○	○	○	○	○	○	○	○	○	○	○	○
45	○	○	○				○	○	○	○	○	○*	○	○	○	○	○	○	○	○	○	○	○	○
50	○	○	○				○	○	○	○	○	○*	○	○	○	○	○	○	○	○	○	○	○	○
55	○	○	○				○	○	○	○*	○	○*	○	○	○	○	○	○	○	○	○	○	○	○
60	○	○	○				○	○	○	○*	○*	○*	○	○	○	○	○	○	○	○	○	○	○	○
65	○	○					○	○	○	○*	○*	○*	○	○	○	○	○	○*	○	○	○	○	○	○
70	○	○					○	○	○	○*	○*	○*	○	○	○	○	○	○*	○	○	○	○	○	○
80							○	○	○	○*	○*		○	○	○	○	○		○	○	○	○	○	○

FL \ Type·D	LHSH10 WR13	WF13	WL13	WT13	WM13	WH13	LHSH13 WR16	WF16	WL16	WT16	WM16	WH16	LHSH16 WR18	WF18	WL18	WT18	WM18	WH18	LHSH20 WL22	WT22	WM22	WH22
20～70 (5mm increments)	○	○	○	○	○	○	○	○	○	○	○	○	○	○	○	○	○	○	○	○	○	○
80	○	○	○	○	○	○	○	○	○	○	○	○	○	○	○	○	○	○	○	○	○	○
90	○	○	○		○		○	○	○		○				○		○	○*	○		○	○*
100															○		○	○*	○		○	○*

＊: Maximum allowable deflection Fmax. is smaller than the above spring constant. For details P.994～.

■Lifter pins —Precision type with pilot punch relief hole—

RoHS

LHHV

M SK4
H 53～58HRC
(Annealing of head to max. 45HRC)

φD4・6

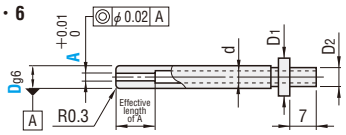

φD8

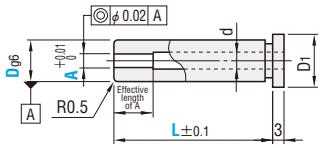

D_{g6}		D_1	D_2	Effective length of A	d	Catalog No. Type	D	L	A 0.01mm increments	Base unit price 1～19 pieces
4	−0.004 −0.012	6	3	2	2.2	LHHV	4	20 22 25 30	1.00～1.60	
6		8	4.6	3	3.4		6	25 30 33 35	1.00～3.00	Quotation
8	−0.005 −0.014	10	—	4	4.4		8	30 33 35 40	1.00～4.00	

Order

Catalog No.	—	L	—	A
LHHV 6	—	30	—	2.50

Days to Ship **Quotation**

Price **Quotation**

Alterations

Catalog No.	—	L	—	A	—	(VSC·SN)
LHHV 6	—	30	—	2.50	—	VSC

Alteration	Code	Spec.	1Code
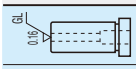	VSC	Lapping of pin end	Quotation
	SN	Elimination of spring guide (D2=0) Can be used for D4・6.	

BLOCK LIFTERS
—FIXING-KEY TYPE—

	—Normal type— RoHS	—With pilot hole— RoHS	—Stripper contact type— RoHS
Left side	**BLL—L** 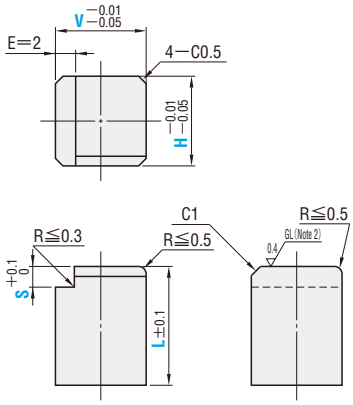	**BLH—L** 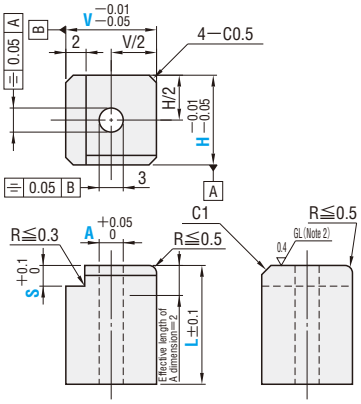	**BLLF—L** 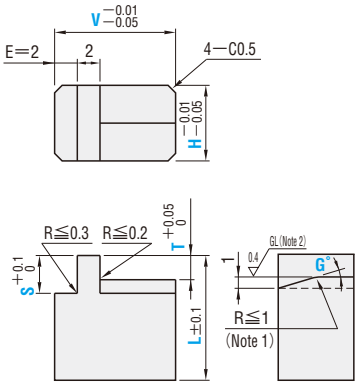
Right side	**BLL—R** 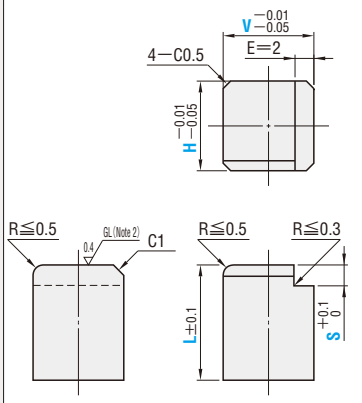	**BLH—R** 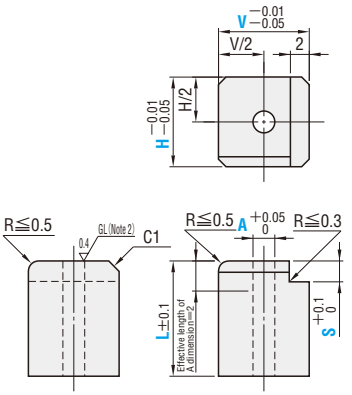	**BLLF—R** 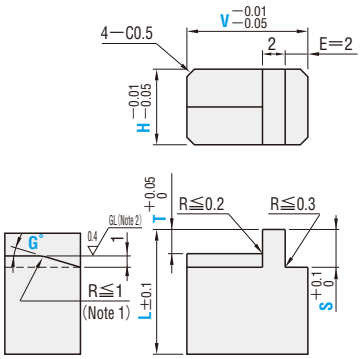
Both sides	**BLL—W** 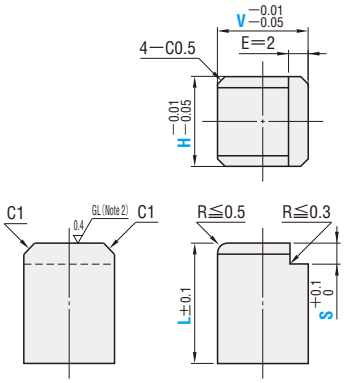	**BLH—W** 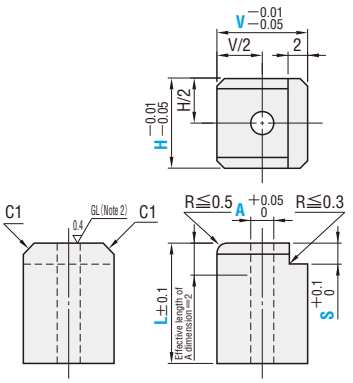	**BLLF—W** 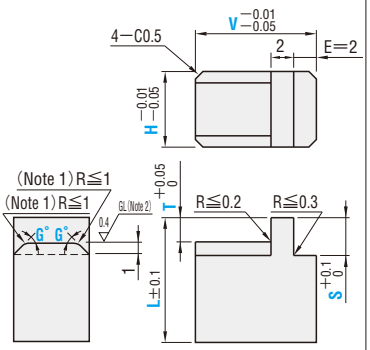

Note 1: R≦1···For R≦1, finishing is done by hand.
Note 2: GL···Simple lapping

For a type with pilot hole (BLH—L·R·W), use alteration **XC** to change the position of the pilot hole.

M SKD11
H 60～ 63HRC

Catalog No.		V	H	L	S	Stripper contact T 0.1mm increments	Stripper contact G°	Base unit price 1~9 pieces BLL—□	Base unit price 1~9 pieces BLLF—□
—Normal type—	— Stripper contact type —	(5)	5	10	1	—	—	Quotation	Quotation
		(6)	6		2				
BLL—L	BLLF—L	8	6	10	1	0.1~2.5	30		
			8	13					
BLL—R	BLLF—R	10	6	20	2	0.1~3.0	45		
BLL—W	BLLF—W		8		3				
		13	10	25		0.1~3.5			

V (5) (6) ···→ Can be used for normal type only (BLL—□).

Catalog No.		V	H	L	S	A 0.1mm increments	Base unit price 1~9 pieces
— With pilot hole —	BLH—L	6	6	8	1	0.8~1.8	Quotation
	BLH—R	8	8	10	2	1.0~3.5	
	BLH—W	10	10			1.0~5.0	

Order

Catalog No.	V	H	L	S	A	T	G
BLLF—L	10	08	13	S 2		T2.1	G45
BLH — R	08	08	10	S 1	A2.1		

Days to Ship Quotation

Price Quotation

Alterations

Catalog No.	V	H	L (LC)	S (SC)	A	T	G	(EC·XC·NL)
BLLF—L	10	08	LC11.0	SC1.5		T0.8	G45	EC3.4
BLH — R	08	08	LC9	S1	A2.1			NL

Alteration	Code	Spec.	1Code
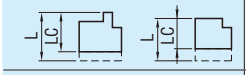	LC	Full length change 7≦LC<L 0.1mm increments	Quotation
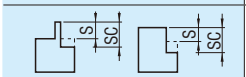	SC	S dimension change 1<SC<6 0.1mm increments	
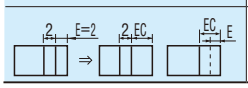	EC	E dimension change 2<EC≦V/2 0.1mm increments ⊗ Cannot be used for BLH—□.	

Alteration	Code	Spec.	1Code
BLH—L BLH—R BLH—W 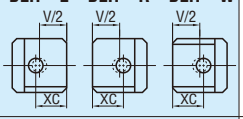	XC	Pilot hole position change $\frac{A}{2}+2 \leqq XC \leqq V-2-\frac{A}{2}$ 0.1mm increments Can be used for types with pilot holes only.	Quotation
	NL	No simple lapping on lifting surface	

■Features

1. Because the stripper plate directly pushes the block lifter down, damage to the workpiece caused by the stripper plate can be prevented. (Stripper contact type)
2. Because this type is fixed in place with a key, it can be removed easily when regrinding of the die plate is performed, and does not require lift adjustment.
3. Compared to round lifters, this type achieves a wider lift area, making it effective for press machining of thin parts such as lead frames and connectors.

Example

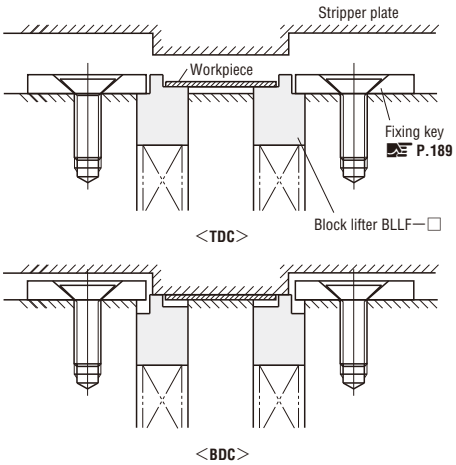

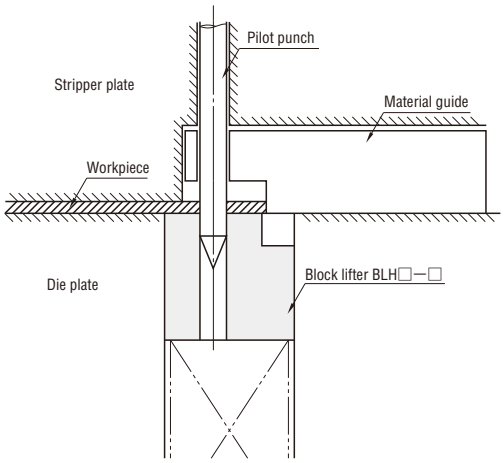

SPRING PLUNGERS / WRENCHES

Spring plungers
—Steel type—

RoHS

Type			Main body M	Main body H	Main body S	Pin M	Pin H	Pin S	Spring M	Service temp.range
Steel nose	For light load	PJL	S45C	29～35HRC	Black oxide (Fe_3O_4)	S45C	57～63HRC (Carburizing)	Bright chrome plating	SWP—B	—30～80℃
	For heavy load	PJH						Black oxide (Fe_3O_4)		
	For extremely heavy load	PJX			Nickel plating					
Resin nose	For light load	NPJL			Black oxide (Fe_3O_4)	Polyacetal	—	—		
	For heavy load	NPJH								
	For extremely heavy load	NPJX			Nickel plating					

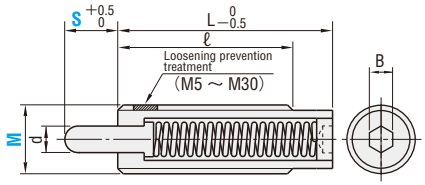

- Thread-locking adhesive is not applied on M3 and M4.
- To fix the position of the ball plunger microencapsulated anaerobic adhesive is applied.Once the parts have been loosened, adhesion is lost, use an anaerobic adhesive when reassembling.
- The adhesive is most affective if left on the part for 72 hours and more in 25℃. Note if the parts are left for short period of time and in low temperature, the thread-lockwill be less-effective.

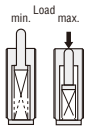

d	ℓ	L Light and heavy loads	L Extremely heavy loads	B	For light load (PJL・NPJL) min.	N {kgf} Load	max.	For heavy load (PJH・NPJH) min.	N {kgf} Load	max.	For extremely heavy load (PJX・NPJX) min.	N {kgf} Load	max.	Catalog No. Type	M (Coarse thread)	S	Base unit price 1～49 pieces For light load For heavy load	For extremely heavy load
1.1	10(15)	10	15	0.9	0.49	{0.05}	1.0 {0.1}	0.78	{0.08}	2.9 {0.3}	2.2	{0.2}	4.5 {0.5}	PJL (All sizes) PJH (All sizes) PJX (＊marks only) NPJL (＊marks only) NPJH (＊marks only) NPJX (＊marks only)	3	＊＊ 1.5	Quotation	
1.1	15(20)	15	20	0.9	0.29	{0.03}	1.0 {0.1}	0.78	{0.08}	2.9 {0.3}	1.8	{0.2}	4.5 {0.5}			＊＊ 3		
1.6	15(24)	15	24	1.3	1.0	{0.1}	2.0 {0.2}	2.9	{0.3}	8.8 {0.9}	5.2	{0.5}	13 {1.3}		4	＊＊ 2		
1.6	24	24	24	1.3	0.59	{0.06}	2.0 {0.2}	2.0	{0.2}	8.8 {0.9}	5.2	{0.5}	13 {1.3}			＊＊ 4		
2.0	20(27)	20	27	1.5	2.0	{0.2}	9.8 {1.0}	4.9	{0.5}	19.6 {2.0}	9.1	{0.9}	24.5 {2.5}		5	＊＊ 3		
2.0	27(39)	27	39	1.5	2.0	{0.2}	9.8 {1.0}	2.9	{0.3}	19.6 {2.0}	8.8	{0.9}	24.8 {2.5}			＊＊ 5		
2.5	25(30)	25	30	2	5.9	{0.6}	9.8 {1.0}	7.8	{0.8}	29.4 {3.0}	14.2	{1.4}	39.5 {4.0}		6	＊＊ 3		
2.5	30(36)	30	36	2	2.0	{0.2}	9.8 {1.0}	4.9	{0.5}	29.4 {3.0}	14.1	{1.4}	39.4 {4.0}			＊＊ 5		
2.5	30	39	—	2	1.4	{0.14}	9.8 {1.0}	5.0	{0.5}	28.0 {3.0}	—		—			10		
3.1	25(27)	25	27	2.5	5.9	{0.6}	9.8 {1.0}	14.7	{1.5}	29.4 {3.0}	35.3	{3.6}	41.2 {4.2}		8	＊＊ 3		
3.1	27(30)	27	35	2.5	2.9	{0.3}	9.8 {1.0}	7.8	{0.8}	29.4 {3.0}	14.7	{1.5}	41.2 {4.2}			＊＊ 5		
3.1	30	43	—	2.5	3.0	{0.3}	9.8 {1.0}	7.0	{0.7}	28.8 {3.0}	—		—			10		
3.8	30	30	35	3	5.9	{0.6}	14.7 {1.5}	8.8	{0.9}	49.0 {5.0}	15.7	{1.6}	62.8 {6.4}		10	＊＊ 5		
3.8	30	43	53	3	2.9	{0.3}	14.7 {1.5}	7.8	{0.8}	49.0 {5.0}	12.7	{1.3}	62.8 {6.4}			＊＊10		
3.8	30	58	—	3	2.9	{0.3}	14.7 {1.5}	6.2	{0.6}	48.7 {5.0}	—		—			15		
5.5	30(35)	30	43	4	5.9	{0.6}	14.7 {1.5}	6.2	{0.6}	48.7 {5.0}	37.2	{3.8}	98.1 {10.0}		12	＊＊ 5		
5.5	35	43	58	4	2.9	{0.3}	19.6 {2.0}	7.8	{0.8}	49.0 {5.0}	14.7	{1.5}	98.1 {10.0}			＊＊10		
5.5	35	51	78	4	2.9	{0.3}	19.6 {2.0}	4.9	{0.5}	49.0 {5.0}	14.9	{1.5}	98.1 {10.0}			＊＊15		
5.5	35	78	—	4	3.5	{0.3}	19.6 {2.0}	6.9	{0.7}	49.0 {5.0}	—		—			20		
8	35	60	60	5	5.9	{0.6}	39.2 {4.0}	12.7	{1.3}	78.5 {8.0}	23.5	{2.4}	147.2 {15.0}		16	＊＊10		
8	35	60	70	5	3.9	{0.4}	39.2 {4.0}	12.7	{1.3}	78.5 {8.0}	21.6	{2.2}	147.2 {15.0}			＊＊15		
8	35	85	90	5	4.9	{0.5}	39.2 {4.0}	9.8	{1.0}	78.5 {8.0}	12.7	{1.3}	147.2 {15.0}			＊＊20		
8	35	125	125	5	2.9	{0.3}	39.2 {4.0}	6.9	{0.7}	78.5 {8.0}	19.6	{2.0}	147.2 {15.0}			＊ 30		
8	35	125	—	5	4.9	{0.5}	39.2 {4.0}	6.9	{0.7}	78.5 {8.0}	—		—			40		
8	35	155		5	19.6	{2.0}	49.0 {5.0}	29.4	{3.0}	78.5 {8.0}						50		
8	35	159		5	2.9	{0.3}	49.0 {5.0}	3.9	{0.4}	78.5 {8.0}						60		
8	35	185		5	3.4	{0.35}	49.0 {5.0}	5.5	{0.56}	78.5 {8.0}						70		
8	35	185		5	19.6	{2.0}	49.0 {5.0}	29.4	{3.0}	93.2 {9.5}						80		
10	45	60	80	6	12.7	{1.3}	78.5 {8.0}	24.5	{2.5}	147.1 {15.0}	12.7	{1.3}	245.3 {25.0}		20	＊ 15		
10	45	72	—	6	11.7	{1.2}	78.5 {8.0}	22.6	{2.3}	147.1 {15.0}	—		—			20		
10	45	96		6	11.7	{1.2}	78.5 {8.0}	22.6	{2.3}	147.1 {15.0}						30		
10	45	120		6	11.7	{1.2}	78.5 {8.0}	22.6	{2.3}	147.1 {15.0}						40		
10	45	60		10	19.6	{2.0}	98.1 {10.0}	44.1	{4.5}	196.1 {20.0}					24	7		
10	45	60	84	10	19.6	{2.0}	98.1 {10.0}	47.1	{4.8}	215.7 {22.0}	24.5	{2.5}	314.0 {32.0}			＊ 15		
10	45	75	—	10	17.7	{1.8}	98.1 {10.0}	44.1	{4.5}	215.7 {22.0}	—		—			20		
10	45	100		10	17.7	{1.8}	98.1 {10.0}	44.1	{4.5}	215.7 {22.0}						30		
10	45	124		10	17.7	{1.8}	98.1 {10.0}	44.1	{4.5}	215.7 {22.0}						40		
14	45	66		14	27.5	{2.8}	117.7 {12.0}	44.1	{4.5}	274.6 {28.0}					30	15		
14	45	78		14	27.5	{2.8}	117.7 {12.0}	53.0	{5.4}	274.6 {28.0}						20		
14	45	100		14	27.5	{2.8}	117.7 {12.0}	45.1	{4.6}	274.6 {28.0}						30		
14	45	123		14	27.5	{2.8}	117.7 {12.0}	47.1	{4.8}	274.6 {28.0}						40		

Values in parentheses for ℓ dimension are for extremely heavy load. {kgf} =N×0.101972

Order — Catalog No. PJL12—5 NPJH3—1.5

Days to Ship — Quotation

Price — Quotation

■Wrenches for spring plungers

PJG

RoHS

M S45C
H 35～43HRC
S Black oxide (Fe_3O_4)

M	Catalog No.	Base unit price 1～9 pieces	Volume discount unit price 10～19 pieces
5・6	PJG1	Quotation	
8・10	PJG2		
	PJG2A (For plungers with flanges)		
12	PJG3		
16	PJG4		
20・24	PJG5		
30	PJG6		

Order — Catalog No. PJG1

Days to Ship — Quotation

Example

Spring plunger M3・M4 (Flat head screwdriver)

Spring plunger M5～M30 (Special wrench PJG)

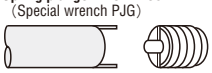

Spring plungers RoHS
—Stainless steel type—

Type			Main body	Nose		Spring	Service temp. range
			M	M	H	M	
Stainless steel nose	For light load	PJLW	Equivalent to SUS304	SUS440C	55HRC～	SUS631	—30～260℃
	For heavy load	PJHW					
	For extremely heavy load	PJXW					
Resin nose	For light load	PJLK		Polyacetal	—		—30～80℃
	For heavy load	PJHK					
	For extremely heavy load	PJXK					

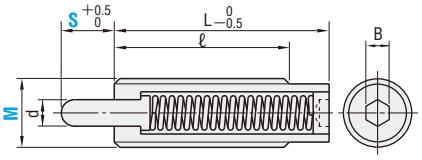

d	ℓ	L	B	For light load (PJLW・PJLK) min.	N Load max.	For heavy load (PJHW・PJHK) min.	N Load max.	For extremely heavy load (PJXW・PJXK) min.	N Load max.	Catalog No. Type	M (Coarse thread)	S	Base unit price 1～49 pieces
1.0	15	15	0.9	0.4	1.3	0.8	2.94	1.1	3.42	PJLW PJHW PJXW PJLK PJHK PJXK	3	1.5	Quotation
	15	15		0.2	1.3	0.6	2.93	0.8	3.41			3	
1.6	15	15	1.3	0.9	2.0	2.0	8.8	6.1	13.8		4	2	
	24	24		0.6	2.1	1.9	8.75	5.8	13.6			4	
2.0	20	20	1.5	1.4	9.7	2.7	16.3	6.8	22.0		5	3	
	27	27		1.1	10.3	1.0	17.1	5.7	21.5			5	
2.5	25	25	2	6.0	9.8	8.0	26.4	15.8	35.6		6	3	
	30	30		3.4	9.86	4.4	26.6	12.9	34.4			5	
3.1	25	25	2.5	6.0	9.9	14.7	27.0	21.9	36.3		8	3	
	27	27		4.0	9.83	6.7	26.6	14.7	34.5			5	
3.8	30	30	3	5.7	14.7	8.2	45.7	24.5	58.6		10	5	
	30	43		4.4	14.7	6.2	45.1	19.8	58.7			10	
5.5	30	30	4	5.8	14.7	18.2	49.0	34.9	63.6		12	5	
	35	43		5.0	14.7	8.2	49.1	25.5	63.6			10	
	35	51		6.9	14.7	7.5	48.9	20.1	63.7			15	
8.0	35	57	5	9.2	34.2	18.9	68.5	38.7	88.4		16	10	
	35	57		8.6	34.4	14.4	68.6	33.9	88.1			15	
	35	65		7.1	34.4	4.2	68.6	25.4	88.1			20	

Loosening prevention treatment is not used. Load min. is the initial load and max. is the load at the time when the pin is sunk furthest. {kgf}=N×0.101972

Order — Catalog No. PJLW 12—5, PJHW 5—3

Days to Ship — Quotation

Price — Quotation

■Spring plungers for slanted surfaces

PJHZ (For slanted surfaces) RoHS

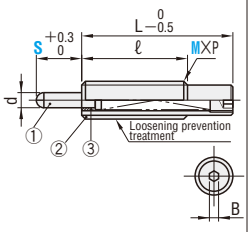

① M S45C
H 50HRC～Carburizing
② M S45C
③ Special bushing

M×P (Coarse thread)	d	S	ℓ	L	B	Load W N {kgf} min.	max.	Catalog No. Type	M—S	Base unit price 1～19 pieces
10×1.5	4	10	30	43	3	7.8 (0.8)	49.0 (5.0)	PJHZ	10—10	Quotation
12×1.75	5		35	43	4	7.8 (0.8)	49.0 (5.0)		12—10	
12×1.75		15	35	51		4.9 (0.5)	49.0 (5.0)		12—15	
16×2.0	8	10	35	60	5	12.7 (1.3)	78.5 (8.0)		16—10	
16×2.0		15	35	60		12.7 (1.3)	78.5 (8.0)		16—15	
16×2.0		20	35	85		9.8 (1.0)	78.5 (8.0)		16—20	
16×2.0		30	35	125		6.9 (0.7)	78.5 (8.0)		16—30	

{kgf} =N×0.101972

■PJHZ features

① The special structure improves resistance to wear and seizure, allowing use on slanted surfaces.
(Conventional spring plungers should be used at 0° for oil-free types and 5° or less for lubricated types.)
② Can be used oil—free.
③ Angles of use: 0～30°

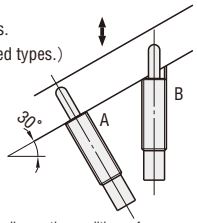

Test conditions
Press machine: 20—ton crank press
Speed: 130SPM
Slant angle: 30°
Lubrication: Oil—free

Type	Lifetime A	Lifetime B
PJHZ16—30	Minimum 300,000 strokes	Minimum 300,000 strokes
PJH 16—30	Scuffing occurs at 17,000 strokes.	Scuffing occurs at 50,000 strokes.

Note: The test results are from the specific conditions listed above. The actual lifetime will vary depending on the conditions of use.

Order — Catalog No. PJHZ 12—15

Days to Ship — Quotation

Price — Quotation

SPRING PLUNGERS
—SHORT TYPE / HEX-PIN TYPE / WRENCHES FOR HEX-PINS—

Short type RoHS

Type			Main body			Pin			Spring	Service temperature range
Length	Load		M	H	S	M	H	S	M	
Short	Light	PJLS	S45C	29～35HRC	Fe3O4	S45C	57～63HRC Carburizing	Unichrome plating	SWP—B	—30°～80°
Extremely short		PJFW						Black oxide		

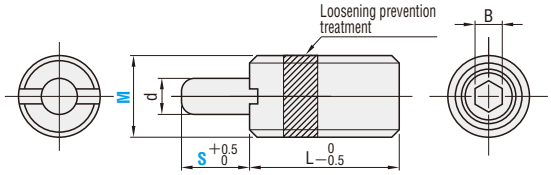

To fix the position of the ball plunger microencapsulated anaerobic adhesive is applied. Once the parts have been loosened, adhesion is lost, use an anaerobic adhesive when reassembling.

The adhesive is most affective if left on the part for 48 hours and more in 25℃ . Note if the parts are left for short period of time and in low temperature, the thread-lock will be less-effective.

■**PJLS・PJFW features** Due to the special structure, these plungers have a short full length L.

M×P (Coarse thread)	d	S	L PJLS	L PJFW	B	PJLS Load min. N(kgf)	PJLS Load max.	PJFW Load min. N(kgf)	PJFW Load max.	Catalog No. Type	Catalog No. M—S	Base unit price 1～19 pieces PJLS	Base unit price 1～19 pieces PJFW
10×1.5	3.8	5	22	—	3	5.9 {0.6}	14.7 {1.5}	—		PJLS	10— 5		
		10	30			2.9 {0.3}	19.6 {2.0}				10—10		
12×1.75	5.5	5	22	19	4	5.9 {0.6}	14.7 {1.5}	5.7 {0.6}	14.7 {1.5}		12— 5		
		10	30	23		2.9 {0.3}	19.6 {2.0}	2.9 {0.3}	14.7 {1.5}		12—10	Quotation	
		15	39	30		2.9 {0.3}	19.6 {2.0}	2.4 {0.2}	14.7 {1.6}		12—15		
16×2.0	8	10	—	24	5	—		3.0 {0.3}	19.8 {2.0}	PJFW	16—10		
		15		33				3.0 {0.3}	19.7 {2.0}		16—15		
		20		38				3.0 {0.3}	19.9 {2.0}		16—20		

Hex pin type RoHS

Type		Main body M	Main body H	Main body S	Pin M	Pin H	Pin S	Spring M	Service temperature range
For light load	PJLR	S45C	29～35HRC	Fe3O4	S45C	57～63HRC Carburizing	Unichrome plating Fe3O4	SWP—B	—30°～80°
For heavy load	PJHR								

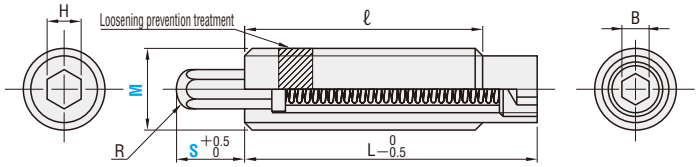

To fix the position of the ball plunger microencapsulated anaerobic adhesive is applied. Once the parts have been loosened, adhesion is lost, use an anaerobic adhesive when reassembling.

The adhesive is most affective if left on the part for 72 hours or more in 25℃ . Note if the parts are left for short period of time and in low temperature, the thread-lock will be less-effective.

■**Features of PJLR and PJHR** Because the pin shape is hexagonal, the pins can be installed using a wrench. No special wrench is required.

M×P (Coarse thread)	H	R	S	ℓ	L	B	PJLR Load min. N(kgf)	PJLR Load max.	PJHR Load min. N(kgf)	PJHR Load max.	Catalog No. Type	Catalog No. M—S	Base unit price 1～19 pieces
10×1.5	4	1.9	5	30	30	3	5.9 {0.6}	14.7 {1.5}	8.8 {0.9}	49.0 {5.0}	PJLR	10— 5	
			10		43		2.9 {0.3}	14.7 {1.5}	7.8 {0.8}	49.0 {5.0}		10—10	
12×1.75	5	2.9	5		30	4	5.9 {0.6}	14.7 {1.5}	18.6 {1.9}	49.0 {5.0}		12— 5	
			10	35	43		2.9 {0.3}	19.6 {2.0}	7.8 {0.8}	49.0 {5.0}		12—10	Quotation
			15		51		2.9 {0.3}	19.6 {2.0}	4.9 {0.5}	49.0 {5.0}		12—15	
16×2.0	7	4.1	10		60	5	5.9 {0.6}	39.2 {4.0}	12.7 {1.3}	78.5 {8.0}	PJHR	16—10	
			15		60		3.9 {0.4}	39.2 {4.0}	12.7 {1.3}	78.5 {8.0}		16—15	
			20		85		4.9 {0.5}	39.2 {4.0}	9.8 {1.0}	78.5 {8.0}		16—20	
			30		125		2.9 {0.3}	39.2 {4.0}	6.9 {0.7}	78.5 {8.0}		16—30	
			50		155		19.6 {2.0}	49.0 {5.0}	29.4 {3.0}	78.5 {8.0}		16—50	
			80		185		19.6 {2.0}	49.0 {5.0}	29.4 {3.0}	93.2 {9.5}		16—80	
24×3.0	10	15.0	7	45	60	10	19.6 {2.0}	98.1 {10.0}	44.1 {4.5}	196.1 {20.0}		24— 7	
			15		60		19.6 {2.0}	98.1 {10.0}	47.1 {4.8}	215.7 {22.0}		24—15	
30×3.5	13	7.6	20		78	14	27.5 {2.8}	117.7 {12.0}	53.0 {5.4}	274.6 {28.0}		30—20	

Wrenches for hex pins RoHS

PJRW

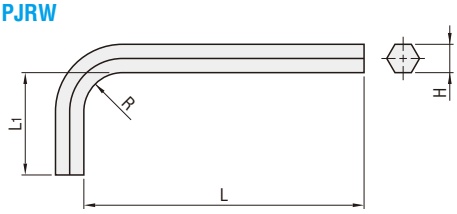

M SNCMXV S Parkerizing

H	L	L_1	R	Catalog No. Type	Catalog No. No.	Base unit price 1～19 pieces
7	95	34	7	PJRW	16	Quotation
13	132	50	13		30	

Order

Catalog No.
PJLS 12—10
PJHR 10—10
PJRW 16

Days to Ship **Quotation**

Price **Quotation**

■**PJLR・PJHR features**

1. Because the pin shape is hexagonal, it can be installed using a socket wrench or spanner.
2. If spring damage causes the pin to become indented, a special wrench (PJRW) can be used to remove the pin. For M10・12・24, use a commercially-available wrench.

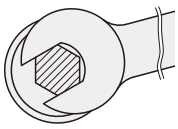

Spring plungers with flanges

RoHS

Type		Main body M	Main body H	Main body S	Pin M	Pin H	Pin S	Spring M	Service temperature range
For light load	FPJL	S45C	29～35HRC	Black oxide	S45C	57～63HRC Carburizing	Unichrome plating / Black oxide	SWP—B	—30°～80°
For heavy load	FPJH								

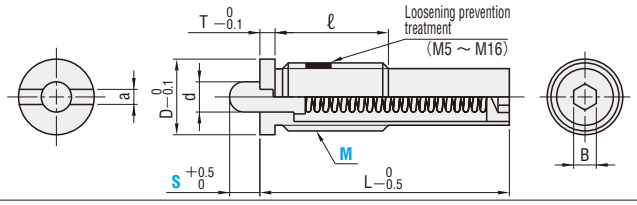

- Thread-locking adhesive is not applied on M3 and M4.
- To fix the position of the ball plunger microencapsulated anaerobic adhesive is applied. Once the parts have been loosened, adhesion is lost, use an anaerobic adhesive when reassembling.
- The adhesive is most affective if left on the part for 72 hours and more in 25℃ . Note if the parts are left for short period of time and in low temperature, the thread-lock will be less-effective.

Applicable wrench	M×P (Coarse thread)	d	S	D	T	ℓ	L	B	a	FPJL Load min. N (kgf)	FPJL Load max.	FPJH Load min. N (kgf)	FPJH Load max.	Catalog No. Type	Catalog No. M—S	Base unit price 1～19 pieces
—	3×0.5	1.1	1.5	5	1.5	5	10	0.9	0.5	0.49{0.05}	1.0 { 0.1}	0.78 {0.08}	2.9 { 0.3}	FPJL / FPJH	3— 1.5	Quotation
	3×0.5		3				15			0.29{0.03}	1.0 { 0.1}	0.78 {0.08}	2.9 { 0.3}		3— 3	
	4×0.7	1.6	2	6	1.8	6	15	1.3	0.7	1.0 {0.1}	2.0 { 0.2}	2.9 {0.3}	8.8 { 0.9}		4— 2	
	4×0.7		4				24			0.59{0.06}	2.0 { 0.2}	2.0 {0.2}	8.8 { 0.9}		4— 4	
PJG1	5×0.8	2.0	3	7	2.0	8	20	1.5	1.2	2.0 {0.2}	9.8 { 1.0}	4.9 {0.5}	19.6 { 2.0}		5— 3	
	5×0.8		5				27			2.0 {0.2}	9.8 { 1.0}	2.9 {0.3}	19.6 { 2.0}		5— 5	
	6×1.0	2.5	3	8	2.5	9	25	2	1.5	5.9 {0.6}	9.8 { 1.0}	7.8 {0.8}	29.4 { 3.0}		6— 3	
	6×1.0		5				30			2.0 {0.2}	9.8 { 1.0}	4.9 {0.5}	29.4 { 3.0}		6— 5	
PJG2A	8×1.25	3.1	3	10		12	25	2.5		5.9 {0.6}	9.8 { 1.0}	14.7 {1.5}	29.4 { 3.0}		8— 3	
	8×1.25		5				27			2.9 {0.3}	9.8 { 1.0}	7.8 {0.8}	29.4 { 3.0}		8— 5	
	10×1.5	3.8	5	12		15	30	3		5.9 {0.6}	14.7 { 1.5}	8.8 {0.9}	49.0 { 5.0}		10— 5	
	10×1.5		10				43			2.9 {0.3}	14.7 { 1.5}	7.8 {0.8}	49.0 { 5.0}		10—10	
PJG3	12×1.75	5.5	5	14	3.0	20	30	4	2.0	5.9 {0.6}	14.7 { 1.5}	18.6 {1.9}	49.0 { 5.0}		12— 5	
	12×1.75		10				43			2.9 {0.3}	19.6 { 2.0}	7.8 {0.8}	49.0 { 5.0}		12—10	
	12×1.75		15				51			2.9 {0.3}	19.6 { 2.0}	4.9 {0.5}	49.0 { 5.0}		12—15	
PJG4	16×2.0	8.0	10	18		25	60	5		5.9 {0.6}	39.2 { 4.0}	12.7 {1.3}	78.5 { 8.0}		16—10	
	16×2.0		15				60			3.9 {0.4}	39.2 { 4.0}	12.7 {1.3}	78.5 { 8.0}		16—15	
	16×2.0		20				85			4.9 {0.5}	39.2 { 4.0}	9.8 {1.0}	78.5 { 8.0}		16—20	
	16×2.0		30				125			2.9 {0.3}	39.2 { 4.0}	6.9 {0.7}	78.5 { 8.0}		16—30	
	16×2.0		40				125			4.9 {0.5}	39.2 { 4.0}	6.9 {0.7}	78.5 { 8.0}		16—40	

- M3 and M4 are installed using a flat head screwdriver. P.734

{kgf}=N×0.101972

Order — Catalog No. FPJL 10—5 — Days to Ship: Quotation — Price: Quotation

Ball plungers with flanges

RoHS

Type	Main body M	Main body H	Main body S	Ball M	Ball H	Spring M	Service temperature range
FBPJ	S45C	29～35HRC	Black oxide	SUS440C	55HRC～	SUS631J1	—30°～80°
FBPJS	SUS303	—	—				—30°～260°

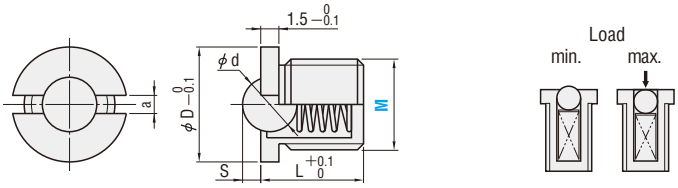

Applicable wrench	d	S	D	L	a	FBPJ Load (N) min.	FBPJ Load (N) max.	FBPJS Load (N) min.	FBPJS Load (N) max.	Catalog No. Type	M (Coarse thread)	Base unit price 1～49 pieces FBPJ	FBPJS
BPJG1	3	0.8	7	5	0.8	0.6	5.6	1.3	6.4	FBPJ / FBPJS	5	Quotation	
BPJG2	4	1.0	8	6	1.0	2.8	6.3	2.7	8.0		6		
BPJG3	5	1.6	10	7	1.5	2.9	9.6	1.3	10.2		8		
BPJG4	6.35	1.9	12	9		6.4	11.7	6.1	17.2		10		
BPJG5	7.94	2.4	14	11.5		9.0	15.0	2.1	18.8		12		
	9.53	3.2	18	16	2.0	9.9	21.5	13.0	25.5		16		

{kgf}=N×0.101972

Order — Catalog No. FBPJ 5 — Days to Ship: Quotation — Price: Quotation

■Ball buttons

BBT

RoHS

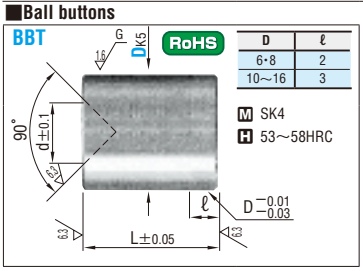

D	ℓ
6·8	2
10～16	3

M SK4
H 53～58HRC

D_{K5}		L	d	Catalog No. Type	D	Base unit price 1～19 pieces	Volume discount unit price 20～49	50～199	200～500
6	+0.006 +0.001	8	2	BBT	6	Quotation			
8	+0.007 +0.001	10	3		8				
10		12	4		10				
12	+0.009 +0.001	14	5		12				
16		18	8		16				

- When using in combination with a ball plunger, use a product with the same No. (M=D). (BBT6 can also be used for M5.)

Order — Catalog No. BBT6 — Days to Ship: Quotation — Price: Quotation

Ball plungers —Normal type—

RoHS

Not compatible with catalog Nos. indicated by ▭.

Type			Main body M	Main body H	Main body S	Ball M	Ball H	SPRINGS M	SPACERS M	Service temp. range
Metal ball	For light load	BPJ	SCM435	29~35HRC	Black oxide	SUJ2	55HRC~	SWP—B	SUS304	—30~80℃
	For heavy load	BSJ	Equivalent to SUS304	—	—					
	For extremely heavy load	BPW	SCM435	29~35HRC	Nickel plating					
Resin ball	For light load	NBPJ	S45C		Black oxide	Polyacetal	—		Brass	
	For heavy load	NBSJ								
	For extremely heavy load	NBPW								

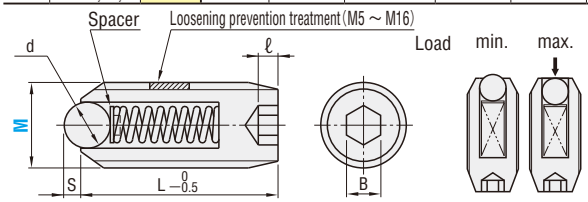

On Standard Type, thread-locking adhesive is not applied on M2, M3 and M4.
To fix the position of the ball plunger microencapsulated anaerobic adhesive is applied. Once the parts have been loosened, adhesion is lost, use an anaerobic adhesive when reassembling.
The adhesive is most affective if left on the part for 72 hours and more in 25℃ . Note if the parts are left for short period of time and in low temperature, the thread-lock will be less-effective.

Metal ball d	Metal ball S	Resin ball d	Resin ball S	L	ℓ	B	For light load (BPJ·NBPJ) Load (N) min.	For light load max.	For heavy load (BSJ·NBSJ) Load (N) min.	For heavy load max.	For extremely heavy load (BPW·NBPW) Load (N) min.	For extremely heavy load max.
1	0.2	—	—	5	1	0.9	0.7	1.4	1.2	2	—	—
1.5	0.5	—	—	7	1	1.5	1	2	1.5	2.9	2.2	5
2.5	0.8	2.4	0.8	9	1.5	2	2	4.9	3.9	9.8	2.5	12.5
3		3.2		12	2	2.5	2.9	9.8	4.9	19.6	11.2	24.1
3		3.2		13	2.5	3	4.9	14.7	9.8	29.4	17.7	33.4
4	1	4	1.0	15	2.5	4	6.9	19.6	12.7	39.2	21.4	45.3
5	1.2	4.8	1.2	16	3	5	8.8	24.5	18.6	49	23.5	58.7
7	1.8	7.1	1.8	20	3	6	9.8	29.4	19.6	58.8	24.1	62.3
9.5	2.5	9.5	2.5	25	3	8	15.7	49	29.4	98	43.6	116

Catalog No. Type	M (Coarse thread)	Base unit price 1~49 pieces Metal ball	Resin ball
BPJ (M2~M16)	2	Quotation	
BSJ (M2~M16)	3		
BPW (M3~M16)	4		
NBPJ (M4~M16)	5		
NBSJ (M4~M16)	6		
NBPW (M4~M16)	8		
	10		
	12		
	16		

M2, M3, M4 do not include a crimping groove on the tip. They can be installed in hexagon holes only.
Load min. is the initial load and max. is the load at the time when the ball is sunk furthest.

{kgf}=N×0.101972

Ball plungers —Stainless steel normal type—

RoHS

Type			Main body M	Ball M	Ball H	SPRINGS M	SPACERS M	Service temp. range
Metal ball	For light load	BSM	Equivalent to SUS304	SUS440C	55HRC~	SUS631J1	SUS304	—30~260℃
	For heavy load	BSZ						
	For extremely heavy load	BSX						
Resin ball	For light load	NBSM		Polyacetal	—			—30~80℃
	For heavy load	NBSZ						
	For extremely heavy load	NBSX						

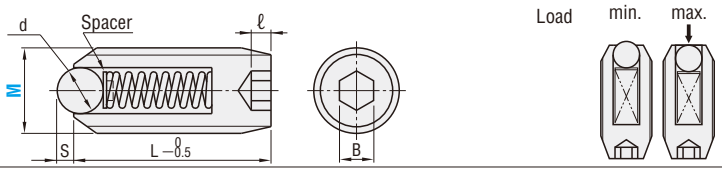

Metal ball d	Metal ball S	Resin ball d	Resin ball S	L	ℓ	B	For light load (BSM) Load (N) min.	For light load (BSM) max.	For light load (NBSM) Load (N) min.	For light load (NBSM) max.	For heavy load (BSZ·NBSZ) Load (N) min.	For heavy load max.	For extremely heavy load (BSX·NBSX) Load (N) min.	For extremely heavy load max.
1	0.2	—	—	5	1	0.9	0.7	1.4	—	—	1.2	2	—	—
1.5	0.5	—	—	7	1	1.5	1	2	—	—	1.5	2.9	2.2	5
2.5	0.8	2.4	0.8	9	1.5	2	1.9	4.9	2	4.9	3.9	9.8	2.5	12.5
3		3.2		12	2	2.5	3.3	9.8	2.9	9.8	4.9	19.6	11.2	24.1
3		3.2		13	2.5	3	5.1	15.3	4.9	14.7	9.8	29.4	17.7	33.4
4	1	4.0	1.0	15	2.5	4	5.5	19.1	6.9	19.6	12.7	39.2	21.4	45.3
5	1.2	4.8	1.2	16	3	5	8.9	24.1	8.8	24.5	18.6	49	23.5	60
7	1.8	7.1	1.8	20	3	6	10.5	29.3	9.8	29.4	19.6	58.8	24.1	63.7
9.5	2.5	9.5	2.5	25	3	8	14.9	48.9	15.7	49	29.4	98	43.6	116.3

Catalog No. Type	M (Coarse thread)	Base unit price 1~49 pieces Metal ball	Resin ball
BSM (M2~M16)	2	Quotation	
BSZ (M2~M16)	3		
BSX (M3~M16)	4		
NBSM (M4~M16)	5		
NBSZ (M4~M16)	6		
NBSX (M4~M16)	8		
	10		
	12		
	16		

M2, M3, M4 do not include a crimping groove on the tip. They can be installed in hexagon holes only.
Loosening prevention treatment is not applied.

{kgf}=N×0.101972

Order — Catalog No. BPJ16, BSZ10

Days to Ship — Quotation

Price — Quotation

■Wrenches for ball plungers

BPJG

RoHS

M S45C
H 34~43HRC
S Black oxide (Fe_3O_4)

M	Catalog No.	Base unit price 1~9 pieces	Volume discount unit price 10~19 pieces
5·6	BPJG 1	Quotation	
8	BPJG 2		
10	BPJG 3		
12	BPJG 4		
16	BPJG 5		

For larger orders, ask about prices/delivery.
Can be used for ball plungers (BPJ·BSJ·BSZ·BSX·FBPJ·FBPJS) with M5~M16. Cannot be used with ball plungers (BSJL·BSXL), short plungers, and resin type ball plungers.

Order — Catalog No. BPJG2

Days to Ship — Quotation

KNOCKOUT PINS / PUSHING PINS

Knockout pins

RoHS

KOP

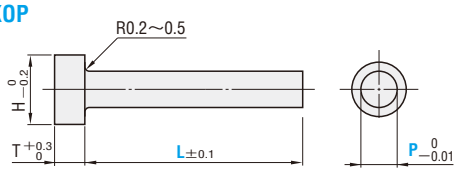

Note that the L dimension does not include head thickness (T).

M Equivalent to SK4
H 53～58HRC

T	H	Catalog No. Type	No.	0.1mm increments L	0.01mm increments min.P max.	Base unit price 1～19 pieces
3	6	KOP	4	7.0～60.0	1.00～ 4.00	Quotation
	8		6		1.00～ 6.00	
5	10		8		2.00～ 8.00	
	12		10		3.00～ 10.00	
	14		12		4.00～ 12.00	
	16		13		6.00～ 13.00	

Order

Catalog No.	—	L	—	P
KOP 6	—	15.5	—	P3.50

Days to Ship Quotation

Price Quotation

Alterations

Catalog No.	—	L	—	P	— (HC・TC, etc.)
KOP 6	—	45.5	—	P5.50	— VSC

Alteration	Code	Spec.	1Code
H HC	HC	Head diameter change P≦HC＜H 0.1mm increments	Quotation
TC T	TC	Head thickness change 3.5≦TC＜5 0.1mm increments Can be used for KOP8～13.	
R0.2 ～0.3	RC	Rounding of pin end to R0.2～0.3.	
0.16	VSC	Lapping of pin end	
	TRN	Addition of undercut (Plate chamfering is not necessary.)	
R0.6～1.0	TRC	Change of R under head R0.2～0.5 is changed to 0.6～1.0. Can be used for H−P≧3.5.	
L T	LKC	L dimension tolerance change L±0.1⋯→±0.02	

Pushing pins

RoHS

JP / JPW / JPWH

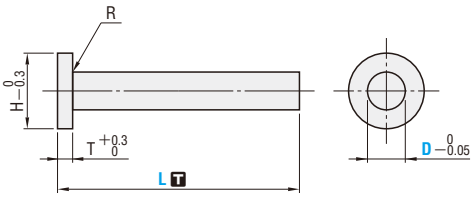

Catalog No.	L T	R
JP	L +0.3 0	R≦0.3
JPW JPWH	L±0.1	0.5≦R≦1.0

JP・JPW	JPWH
M DH2F	M SKD61
H 40HRC～	H 50HRC～

T	H	Catalog No. Type	D	L 0.1mm increments	Base unit price 1～49 pieces L5～29.9	L30.0	L30.1～49.9	L50.0	L50.1～69.9	L70.0
2	3	JP	1	5.0～70.0	Quotation					
	3		1.5							
	4		2							
	5		2.5							
	6		3							
3	8		4							
	9		5							

T	H	Catalog No. Type	D	L 0.1mm increments	Base unit price 1～49 pieces L10.0～29.9	L30.0	L30.1～49.9	L50.0	L50.1～69.9	L70.0	L70.1～99.9	L100.0
5	5	JPW	2	10.0～100.0	Quotation							
	8		3									
	10		4									
	12		5									
	14		6									
	16		8									
	18		10									

T	H	Catalog No. Type	D	L 0.1mm increments	Base unit price 1～49 pieces L10.0～29.9	L30.0	L30.1～49.9	L50.0	L50.1～69.9	L70.0	L70.1～99.9	L100.0
5	5	JPWH	2	10.0～100.0	Quotation							
	8		3									
	10		4									
	12		5									
	14		6									
	16		8									
	18		10									

Order

Catalog No.	—	L
JP 4	—	28.5

Days to Ship Quotation

Price Quotation

Alterations

Catalog No.	—	L	— (RC・HC)
JP5	—	70.0	— RC−HC8.0

Alteration	Code	Spec.	1Code
R0.2～0.3	RC	Rounding of pin end to R0.2～0.3	Quotation
H HC	HC	Head diameter change D≦HC＜H 0.1mm increments	

MATERIAL GUIDE UNITS
—INDUCTION-HARDENED TYPE—

RoHS

Type fixed to die set

ZGUA (Unit)

ZGUA—R (Rail)

ZGUA—L (Rail)

L	a1	a2
60	10	45
80		65
100		75

M S50C
H 55HRC ~
part: Induction-hardened

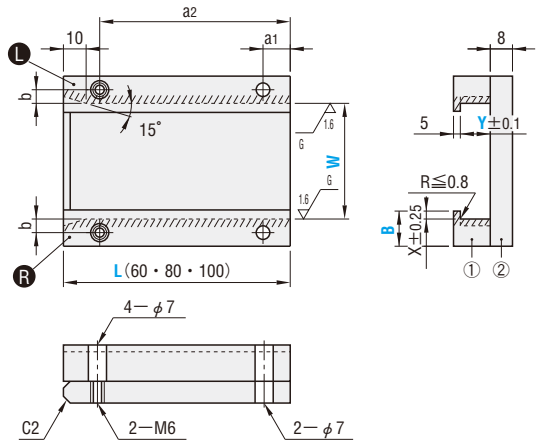

RoHS

Type fixed to die plate

ZGUB (Unit)

ZGUB—R (Rail)

ZGUB—L (Rail)

L	a1	a2	a3	a4	a5
100	8	20	32	50	85
120					105
140					115

M S50C
H 55HRC ~
part: Induction-hardened

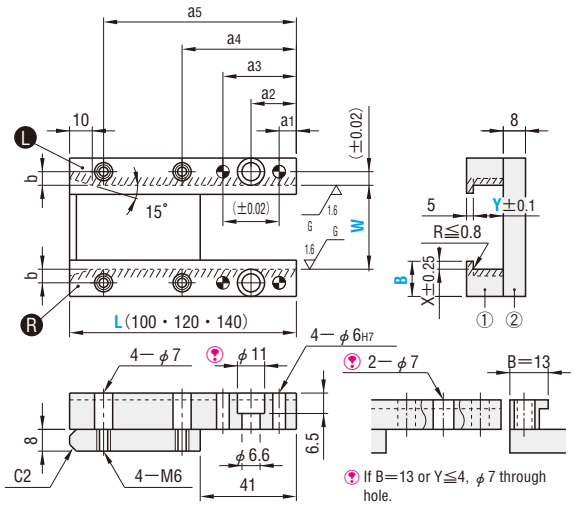

■Unit

Catalog No. Type	B	L	Y 1mm increments	W 0.1mm increments	b	X
ZGUA	13	60 80 100	1 ~ 30	10 ~ 160	5	3
	16				7	3
	20				8	5
ZGUB	13	100 120 140	1 ~ 30	10 ~ 160	5	3
	16				7	3
	20				8	5

■Rail

Catalog No. Type	B	L	Y 1mm increments	b	X
ZGUA—R ZGUA—L	13	60 80 100	1 ~ 30	5	3
	16			7	3
	20			8	5
ZGUB—R ZGUB—L	13	100 120 140	1 ~ 30	5	3
	16			7	3
	20			8	5

Order

Catalog No.	—	L	—	Y	—	W
ZGUA 13	—	100	—	22	—	53.2
ZGUB—R20	—	140	—	15		

Days to Ship Quotation

Price Quotation

B	Base unit price 1 ~ 9 sets					
	ZGUA			ZGUB		
	L60	L80	L100	L100	L120	L140
13	Quotation					
16						
20						

B	Base unit price 1 ~ 9 pieces					
	ZGUA—R・ZGUA—L			ZGUB—R・ZGUB—L		
	L60	L80	L100	L100	L120	L140
13	Quotation					
16						
20						

■Features

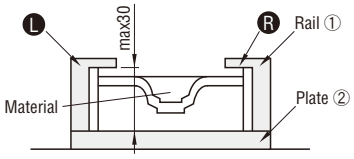

- Because lifting up to 30 mm is possible, can be used for bending, drawing, and other machining.
- When using to match the material width, the rails can also be ordered on their own.

Example

1 **Selecting the unit structure:** Select the unit type according to the die structure, production volume, regrinding frequency, and other factors.

Type fixed to die set

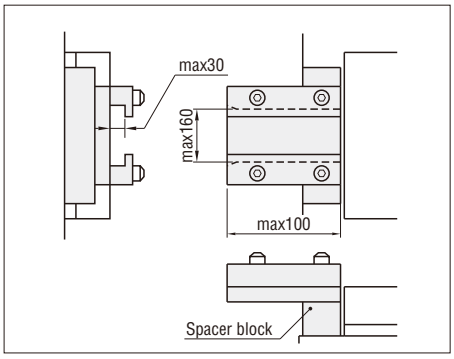

- Fastened by bolts to the die set. (Place a spacer block immediately in front of the die plate.)
- Does not interfere with the layout inside the die.

Type fixed to die plate

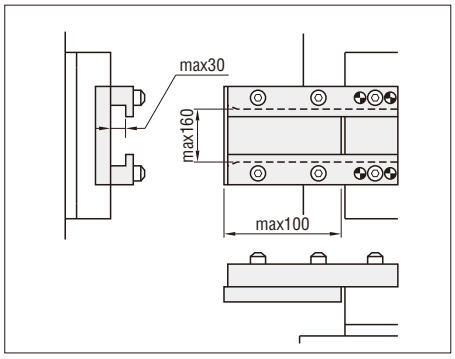

- Fastened to the die plate by bolts or dowel pins.
- Requires a relief in the layout inside the die. (The use of a spacer block can prevent interference with parts inside the die.)
- Features excellent reproducibility at reassembly.

2 **dimension selection:** Decide this dimension based on the width of the material used, lift height, and installation conditions.

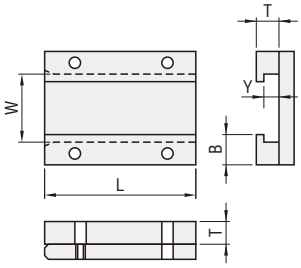

① Determine the W dimension (material guide width).
Material width + Material width tolerance + α (installation accuracy error)

② Determine the Y dimension (groove height).
Lift height + Material thickness + α

③ Determine the T dimension (material guide plate height)
Determine based on the groove height in ②. However, T = Y + 5

④ Determine the L dimension (length of material guide plate).
Determine the L dimension based on the distance between the feeder and die plate, material width and sheet thickness.
- Determine the full length dimension (L) based on the full length for a type fixed to the die set, and on the length projecting from the die plate for a type fixed to the die plate.

⑤ Determine the B dimension (width of material guide plate).
Determine the B dimension with consideration for factors such as the overall balance of the die plate and die, and interference with the sub-guide. Verify that the positions for bolt or dowel pin installation are available.

●Blank for fixing inside the die (Material guide plate) **Catalog No.** **SBM (Equivalent to HPM2T) · SBA (SKS93)** P.743

●This is a blank for the material guide plate blank inside the die.
●The material can be selected according to the conditions.

Type fixed to die set

RoHS

SUK—A L 60
L 80
L100

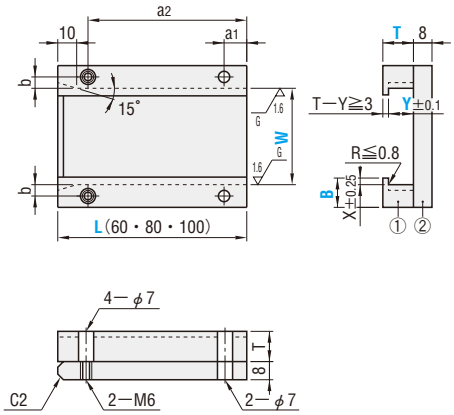

SUK—A L125
L160

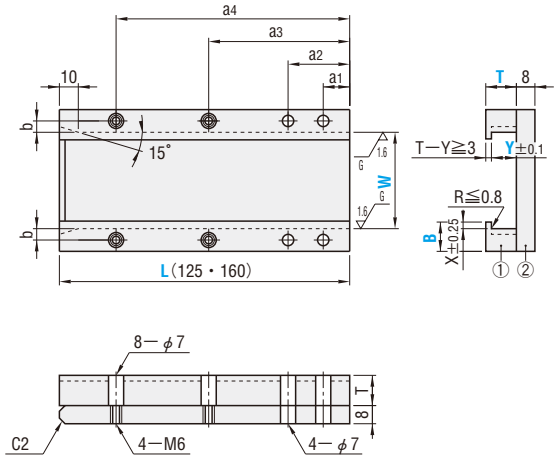

① M SKS93
② M S50C

Type fixed to die plate

RoHS

SUK—B L100
L120
L140

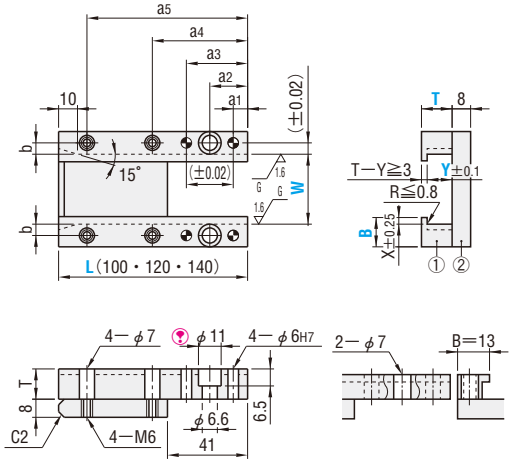

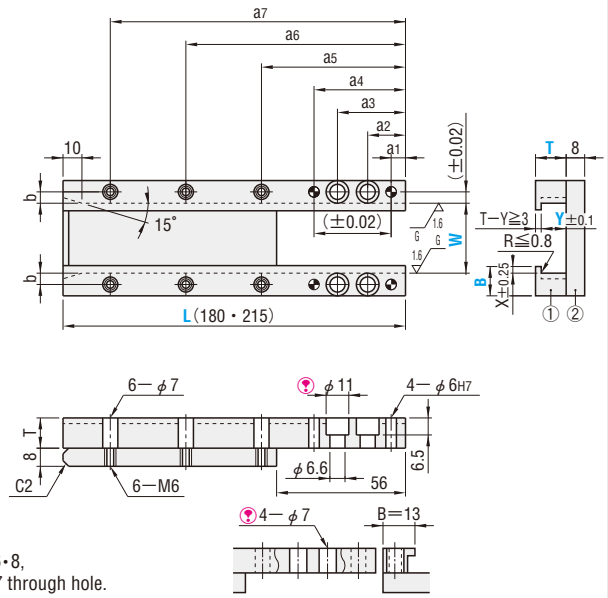

If B=13 or T=6・8,
then this is a φ7 through hole.

① M SKS93
② M S50C

a1	a2	a3	a4	a5	a6	a7	b	X	Catalog No. Type	B	T	L	0.1mm increments Y	W	Base unit price 1 ~ 9 sets
10	45	—	—	—	—	—	5	3	SUK—A	13	6 8 10	60	1.0 ~ T—3.0	7.0 ~ 160.0	Quotation
	65											80			
	75											100			
	25	60	100									125			
10	45	—	—				7	3		16	6 8 10 13	60			
	65											80			
	75											100			
	25	60	100									125			
10	45	—	—				8	5		20	8 10 13 16	60			
	65										8 10 13 16	80			
	75										8 10 13 16	100			
	25	60	100								8 10 13 16	125			
	25	60	135								8 10 13 16	160			
10	45	—	—				10	5		25	8 10 13 16	60			
	65										8 10 13 16	80			
	75										8 10 13 16	100			
	25	60	100								8 10 13 16	125			
	25	60	135								8 10 13 16	160			
8	20	32	50	85	—	—	5	3	SUK—B	13	6 8 10	100	1.0 ~ T—3.0	7.0 ~ 160.0	
		32	50	105								120			
		32	50	115								140			
		35	47	75	115	155						180			
8	20	32	50	85	—	—	7	3		16	6 8 10 13	100			
		32	50	105								120			
		32	50	115								140			
		35	47	75	115	155						180			
8	20	32	50	85	—	—	8	5		20	8 10 13 16	100			
		32	50	105							8 10 13 16	120			
		32	50	115							8 10 13 16	140			
		35	47	75	115	155					8 10 13 16	180			
		35	47	75	130	190					8 10 13 16	215			
8	20	32	50	85	—	—	10	5		25	8 10 13 16	100			
		32	50	105							8 10 13 16	120			
		32	50	115							8 10 13 16	140			
		35	47	75	115	155					8 10 13 16	180			
		35	47	75	130	190					8 10 13 16	215			

Order

Catalog No.				—		—	
Type	B	T	L		Y		W
SUK—A	13	8	100	—	Y5.0	—	W120.5

Days to Ship Quotation

Price Quotation

Example

●How to mount with a spacer block

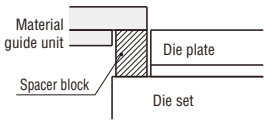

Holes are not machined in the spacer block.
Machine them to meet your specifications before using them. (Refer to P.743)

●Type fixed to die set
Example of installation machining

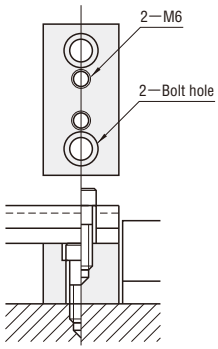

●Type fixed to die plate
Example of installation machining

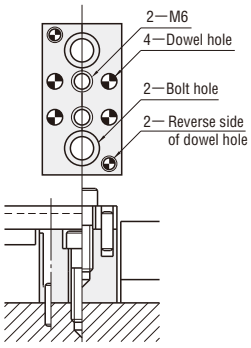

COMPONENTS FOR MATERIAL GUIDE UNITS

■Material guide plates

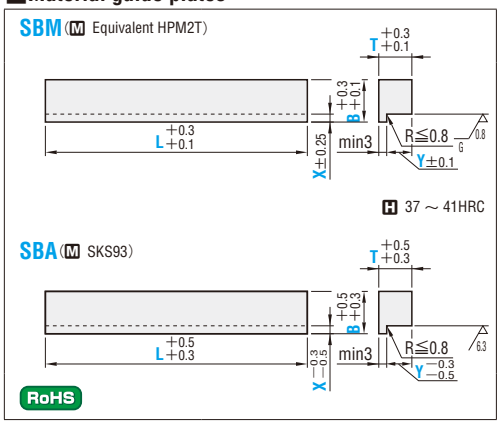

Catalog No.	B	T	1mm increments L	0.1mm increments X	0.1mm increments Y	Base unit price 1～9 pieces T6	T8	T10	T13	T16
SBM (M Equivalent to HPM2T)	13	6	10～ 50	1.0 ～ 5.0	1.0 ～ T−3.0					
		8	51～ 100							
		10	101～ 150							
			151～ 200							
	16	6	10～ 50							
		8	51～ 100							
		10	101～ 150							
		13	151～ 200							
SBA (M SKS93)	20	8	10～ 50							
		10	51～ 100							
		13	101～ 150							
		16	151～ 200							
	25	8	10～ 50							
		10	51～ 100							
		13	101～ 150							
		16	151～ 200							

Quotation

Order

Catalog No.	B·T		L		X		Y
SBM	13 6	—	L150	—	X3.2	—	Y2.8

Days to Ship Quotation

Price Quotation

Example

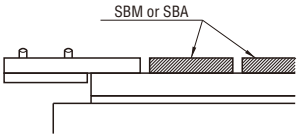

■Spacer blocks for material guides

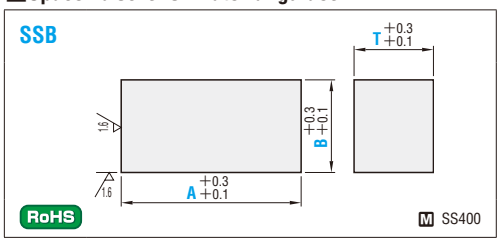

Catalog No.	A	B	T 1mm increments	Base unit price 1 ～ 9 pieces B25	B40	B55
SSB	60	25 40 55	5～60			
	80					
	100					
	125					
	160					
	200					

Quotation

Order

Catalog No.		A		B		T
SSB	—	100	—	40	—	35

Days to Ship Quotation

Price Quotation

Example

Examples of installation

Use in order to prevent the material guide plate from interfering inside the die.
Spacer blocks are not machined with installation holes.
Machine according to the example shown below or your specifications before using.

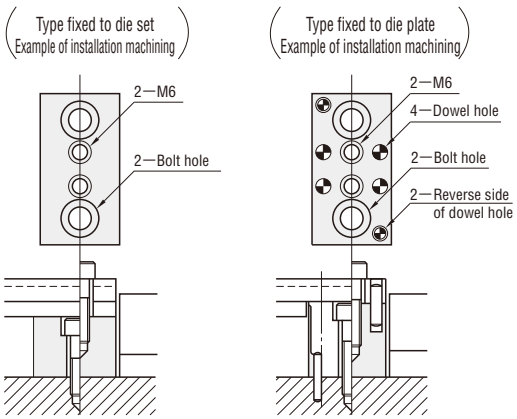

FITTING GUIDE SETS

RoHS

FGK—F
FGK—L
FGK—M
FGK—H

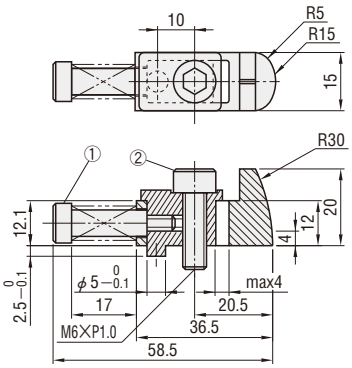

M S45C
H 45～55HRC
(Tip only is induction-hardened.)
A ① MSB6.5—20 (P.691)
② CB 6—25 (P.677)

⊗ Cannot be used with workpiece materials of thickness 0.8 mm or less.

Spring color	Initial load N {kgf}	N/mm {kgf/mm}	Catalog No.	Base unit price 1 ～ 19 pieces
Yellow	1.47 {0.15}	0.49 {0.05}	FGK—F	Quotation
Blue	2.9 {0.3}	1.0 {0.1}	FGK—L	
Red	5.9 {0.6}	2.9 {0.3}	FGK—M	
Green	19.6 {2.0}	6.6 {0.675}	FGK—H	

●Load {kgf} =Load {N} ×0.101972

Order Catalog No. FGK—F

Days to Ship Quotation

Price Quotation
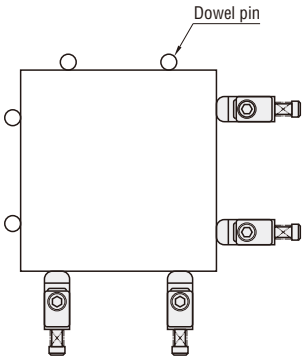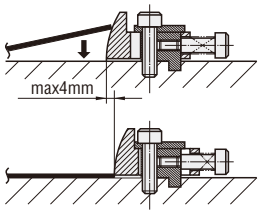
Example