Automating Tomorrow™

DESTACO a DOVER company

Manual Clamps

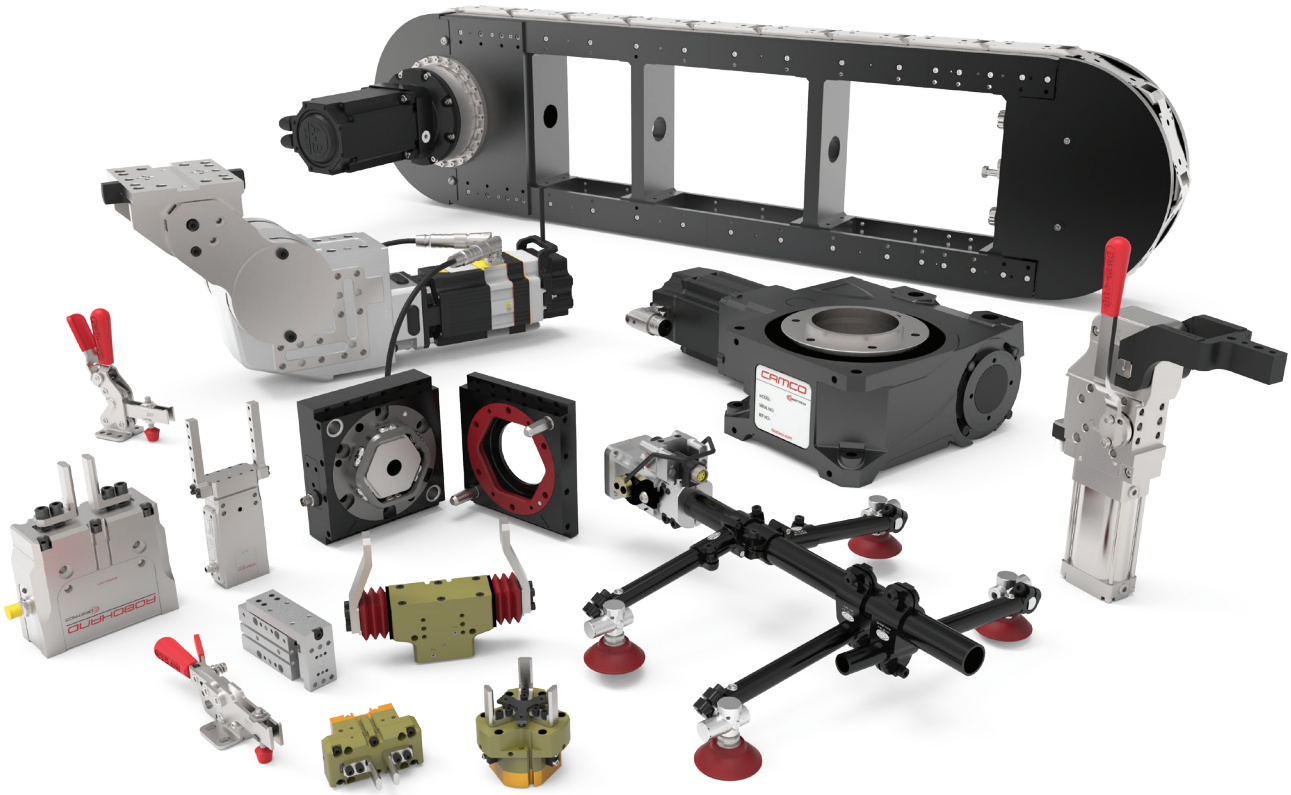

destaco.com

Manual Clamps

This catalog is a custom document and the products included is based on your unique selection from portions of complete catalogs that already exist. Please refer to our full catalogs for more information on products not included in this customized document.

Table of Contents

Technical Comparison Chart (MC)	MC-TCH-1
Vertical Hold Down Clamps	MC-VHD-1
Horizontal Hold-Down Clamps	MC-HHD-1
Straight Line Action (Plunger) Clamps	MC-SLA-1
Variable Stroke Clamps	MC-VSC-1
Pull Action (Latch) Clamps	MC-PAL-1
Squeeze Action (Plier) Clamps	MC-SAP-1
Manual Accessories	MC-ACC-1
Pneumatic Toggle Clamps	MC-PTC-1
Pneumatic Swing Clamps	MC-PSC-1
Pneumatic Power Cylinders	MC-PPC-1
Hydraulic Systems	MC-HYD-1
Electric Pivot Units	PC-PVT-1
Pneumatic Pivot Units	PC-PVT-5
Technical Comparison Chart (TC)	TC-TCH-1
RQC/RTP Series Tool Changers	TC-RQTP-1
Manual Tool Changers	EE-MTC-1
Robot Adaptors	EE-ADP-1
Accelerate LWT Tooling Collection	EE-LWT-1
Round Tooling Components	EE-RND-1
Vacuum Products	EE-VAC-1
Body Builder Octagonal Tooling	EE-BBR-1
84N Series Press Room Grippers	SG-PRG-1
Product Overview	GR-PRO-1
Technical Comparison Chart (GR)	GR-TCH-1
OEM Machine Builder Products	GR-OEM-1
Electric Parallel Grippers (2-Jaw)	GR-EPG-1
Precision Parallel Grippers (2-Jaw)	GR-PRC-1
General Industrial Grippers (2-Jaw)	GR-GEN-1

Dimensions and technical information are subject to change without notice

Table of Contents (continued)

Heavy Duty Parallel Grippers (2-Jaw)	GR-HDP-1
3-Jaw Parallel Grippers	GR-3JP-1
Angular Grippers	GR-ANG-1
Speciality Grippers	GR-SPC-1
Rotary Actuators	GR-ROT-1
Linear Slides	GR-LIN-1
Feed Escapements	GR-ESC-1
RDM Dial Indexers	IN-MCH-1
RD HD Dial Indexers	IN-MCH-27
E-Series HD Drives	IN-MCH-39
RA RIght Angle Drives	IN-MCH-17
RGS/RGD Shaft/Flange Drives	IN-MCH-51
Parallel Shaft/Flange Drives	IN-MCH-71
RNG Easy Access Dial Indexers	IN-MCH-83
Overload Clutches	IN-CLU-1
Custom Cams	IN-CAM-1
Rite-Link Conveyors	IN-CNV-1
Table-Top Modular Conveyors	IN-CNV-3
Heavy Duty Modular Conveyors	IN-CNV-15
LPP Lineal Part Handles	IN-PRT-1
RPP Rotating Part Handlers	IN-PRT-7

VERTICAL HOLD DOWN CLAMPS

Sizing and Application Chart

CLICK OR SCAN
To view full PDF catalog pages on these products



Series	Page MC-VHD-#	Max. Holding Capacity N [lbf.]							Height Under Clamping Bar mm [inch]							Overall Height mm [inch]									
		0 to 1000 [0 to 225]	1000 to 2000 [225 to 450]	2000 to 3000 [450 to 675]	3000 to 5000 [675 to 1125]	5000 to 7000 [1125 to 1575]	7000 to 10000 [1575 to 2250]	10000+ [2250+]	0 to 25 [0 to 0.98]	25 to 40 [0.98 to 1.57]	40 to 55 [1.57 to 2.17]	55 to 70 [2.17 to 2.76]	70 to 85 [2.76 to 3.35]	85 to 100 [3.35 to 3.94]	100+ [3.94+]	0 to 50 [0 to 1.97]	50 to 100 [1.97 to 3.94]	100 to 125 [3.94 to 4.92]	125 to 150 [4.92 to 5.91]	150 to 175 [5.91 to 6.89]	175 to 200 [6.89 to 7.87]	200 to 225 [7.87 to 8.86]	225 to 250 [8.86 to 9.84]	250 to 275 [9.84 to 10.83]	275+ [10.83+]
2002	1			●					●	●								●	●						
2007	5				●					●	●										●				
2010	7					●					●	●											●		
201	9	●							●								●								
202	11	●							●	●							●	●							
207	15		●	●						●								●			●				
210	19			●	●						●	●								●			●	●	
247	21				●						●	●											●	●	
267	21					●							●												●
5905	25				●						●										●				
5910	25						●				●													●	
5915	25							●				●													●
5105	27				●							●									●				
5110	27					●								●									●		
528	29				●						●											●	●		
548/578	30							●				●												●	
533/535	31					●					●	●	●										●		●
91090	33		●									●									●				
317	35		●									●						●							
527	37				●						●										●				
7-101	38			●						●									●						
7-58	38			●							●											●			
7-59	38				●							●											●		
7-60	38						●					●												●	
229	39				●						●													●	
503	41					●							●		●				●						
505	41							●						●	●					●					
506	41							●							●						●				


2002


2010


5910


528


317


7-101


503

Dimensions and technical information are subject to change without notice

CLICK OR SCAN
To view full PDF catalog pages on these products

VERTICAL HOLD DOWN CLAMPS

Sizing and Application Chart

Overall Length mm [inch]								Overal Width mm [inch]						Suitable Application Areas								Standard Material						Arm Style		Mounting Style			Service Environment	
50 to 75 [1.97 to 2.95]	75 to 100 [2.95 to 3.94]	100 to 125 [3.94 to 4.92]	125 to 150 [4.92 to 5.91]	150 to 175 [5.91 to 6.89]	175 to 200 [6.89 to 7.87]	200 to 225 [7.87 to 8.86]	225 to 250 [8.86 to 9.84]	0 to 20 [0 to 0.78]	20 to 40 [0.78 to 1.57]	40 to 60 [1.57 to 2.36]	60 to 80 [2.36 to 3.15]	80 to 100 [3.15 to 3.94]	100+ [3.94+]	Welding	Assembly	Checking Fixtures	Machining	Woodworking	Closures	Food Processing	Duty Cycle	Steel	Stainless Steel	Color Handles	Toggle Lock Plus	Accom. Workpiece Variation	U-Bar Version	Solid Arm Version	Straight Base	Flanged Base	Weld-on Mounting	Normal	Harsh/Dirty
	●	●							●					○	◎	◎	●	◎	◎	⊗	○	✓		✓	✓		✓	✓	✓	✓		✓	
		●		●					●	●				○	◎	◎	●	◎	◎	⊗	○	✓		✓	✓		✓	✓	✓	✓		✓	
				●	●				●		●			○	◎	◎	●	◎	◎	⊗	○	✓		✓	✓		✓	✓	✓	✓		✓	
●								●	●					●	◎	◎	⊗	◎	◎	○	●	✓	✓	✓			✓		✓	✓		✓	
●									●			●		●	◎	◎	⊗	◎	◎	○	●	✓	✓	✓			✓	✓	✓	✓		✓	
	●		●						●		●			●	◎	◎	●	◎	◎	○	○	✓	✓	✓	✓		✓	✓	✓	✓		✓	
			●	●					●		●		●	○	◎	◎	●	◎	○	○	○	✓	✓	✓	✓		✓	✓	✓	✓		✓	
				●							●			○	◎	◎	●	◎	●	⊗	○	✓		✓			✓	✓	✓	✓		✓	
							●					●		○	◎	◎	●	○	●	⊗	◎	✓		✓			✓			✓		✓	
		●							●					◎	◎	○	●	●	●	⊗	◎	✓						✓		✓	✓		✓
				●					●					◎	◎	◎	●	●	●	⊗	◎	✓		✓				✓	✓	✓	✓		✓
		●							●					◎	◎	◎	●	●	●	⊗	◎	✓			✓			✓	✓	✓	✓		✓
			●						●					◎	◎	○	●	●	●	⊗	◎	✓						✓		✓	✓		✓
					●	●					●	●		◎	◎	◎	●	●	●	⊗	◎	✓						✓	✓	✓	✓		✓
			●	●							●	●		◎	◎	◎	●	●	●	⊗	◎	✓		✓				✓	✓	✓	✓		✓
		●								●				○	◎	◎	●	◎	◎	○	○	✓		✓			✓			✓		✓	
			●							●				●	◎	◎	●	◎	◎	○	○	✓		✓			✓	✓	✓	✓		✓	
							●			●				◎	◎	◎	●	●	●	⊗	◎	✓						✓		✓		✓
					●					●				◎	◎	⊗	○	●	●	⊗	◎	✓				✓		✓		✓		✓
					●							●		◎	◎	⊗	○	●	●	⊗	◎	✓				✓		✓		✓		✓
					●							●		◎	◎	⊗	○	●	●	⊗	◎	✓				✓		✓		✓		✓
					●							●		○	◎	◎	●	◎	●	⊗	○	✓		✓		✓	✓			✓	✓		
	●		●							●				◎	◎	○	○	●	●	⊗	◎	✓		✓				✓	✓		✓		✓
		●		●						●				◎	◎	○	○	●	●	⊗	◎	✓						✓	✓		✓		✓
			●			●						●		◎	◎	○	○	●	●	⊗	◎	✓						✓	✓		✓		✓

◎ Excellent/High ○ Fair/Medium ● Poor/Low ⊗ Not Recommended

DESTACO a DOVER company

HORIZONTAL HOLD DOWN CLAMPS

Sizing and Application Chart

CLICK OR SCAN
To view full PDF catalog pages on these products

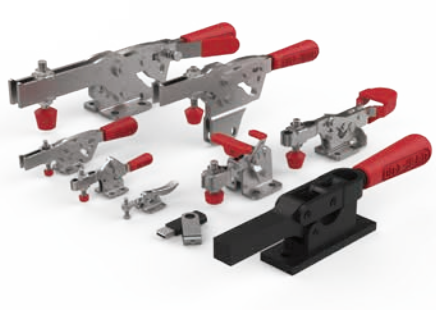


2017


213


205


305


5310

Series	Page MC-HHD-#	Max. Holding Capacity N [lbf.]						Height Under Clamping Bar mm [inch]						Overall Height mm [inch]						
		0 to 1000 [0 to 225]	1000 to 2000 [225 to 450]	2000 to 3000 [450 to 675]	3000 to 5000 [675 to 1125]	5000 to 7000 [1125 to 1575]	7000 to 10000 [1575 to 2250]	0 to 10 [0 to 0.39]	10 to 20 [0.39 to 0.79]	20 to 30 [0.79 to 1.18]	30 to 40 [1.18 to 1.57]	40 to 50 [1.57 to 1.97]	50 to 60 [1.97 to 2.36]	0 to 25 [0 to 0.98]	25 to 40 [0.98 to 1.57]	40 to 55 [1.57 to 2.17]	55 to 70 [1.57 to 2.76]	70 to 85 [2.76 to 3.35]	85 to 100 [3.35 to 3.94]	100+ [1.57+]
2013	1		●						●						●					
2017	3			●						●						●				
2027	5				●						●						●			
213	7		●						●											
217	9	●	●							●										
227	11			●							●						●			
237	13				●							●						●		
245	15												●							●
205	17	●						●												
215	19		●	●						●					●					
225	21			●							●					●				
235	23				●							●					●			
305	25	●							●						●					
307	25		●							●							●			
309	25				●						●								●	
206	27	●													●					
5305	29			●						●					●					
5310	29						●				●					●				

Dimensions and technical information are subject to change without notice

CLICK OR SCAN
To view full PDF catalog pages on these products

HORIZONTAL HOLD DOWN CLAMPS

Sizing and Application Chart

Overall Length mm [inch]									Overal Width mm [inch]				Suitable Application Areas								Standard Material		Arm Style			Mounting Style			Service Environ-ment	
50 to 75 [1.97 to 2.95]	75 to 100 [2.95 to 3.94]	100 to 125 [3.94 to 4.92]	125 to 150 [4.92 to 5.91]	150 to 175 [5.91 to 6.89]	175 to 200 [6.89 to 7.87]	200 to 225 [7.87 to 8.86]	225 to 250 [8.86 to 9.84]	250+ [9.84+]	0 to 25 [0 to 0.98]	25 to 40 [0.98 to 1.57]	40 to 55 [1.57 to 2.17]	55 to 70 [1.57 to 2.76]	Welding	Assembly	Checking Fixtures	Machining	Woodworking	Closures	Food Processing	Duty Cycle	Steel	Stainless Steel	Color Handles	Toggle Lock Plus	U-Bar Version	Solid Arm Version	Straight Base	Flanged Base	Welded	Normal	Harsh/Dirty
			●										○	◉	◉	●	◉	◉	⊗	○	✓		✓	✓	✓			✓		✓	
						●					●		○	◉	◉	●	◉	◉	⊗	○	✓		✓	✓	✓			✓		✓	
								●			●		○	◉	◉	○	◉	◉	⊗	○	✓		✓	✓	✓			✓		✓	
			●							●			○	◉	◉	●	◉	◉	○	○	✓	✓	✓		✓		✓	✓		✓	
					●					●			○	◉	◉	●	◉	◉	○	○	✓	✓	✓		✓		✓	✓		✓	
					●						●		○	◉	◉	●	◉	◉	○	○	✓	✓	✓		✓		✓	✓		✓	
								●				●	○	◉	◉	●	◉	◉	○	○	✓	✓			✓			✓		✓	
								●				●	○	◉	◉	○	◉	○	⊗	○	✓				✓			✓		✓	
●									●				●	◉	◉	●	◉	◉	○	○	✓	✓			✓	✓	✓	✓		✓	
			●							●			○	◉	◉	●	◉	◉	○	○	✓	✓			✓	✓	✓	✓		✓	
				●						●			○	◉	◉	●	◉	◉	○	○	✓	✓			✓		✓	✓		✓	
								●				●	○	◉	◉	●	◉	◉	○	○	✓	✓	✓		✓			✓		✓	
●									●				●	◉	○	●	◉	◉	○	○	✓	✓		✓	✓			✓		✓	
	●										●		○	◉	○	○	◉	◉	○	○	✓			✓	✓			✓		✓	
			●									●	○	◉	○	○	◉	◉	○	○	✓	✓		✓	✓			✓		✓	
●									●				●	◉	○	●	○	◉	○	○		✓			✓			✓			✓
						●							◉	◉	○	●	●	●	⊗	◉	✓		✓	✓			✓		✓	✓	✓
								●				●	◉	◉	○	●	●	●	⊗	◉	✓		✓	✓			✓		✓	✓	✓

◉ Excellent/High ○ Fair/Medium ● Poor/Low ⊗ Not Recommended

STRAIGHT LINE ACTION CLAMPS

Sizing and Application Chart

CLICK OR SCAN
To view full PDF catalog pages on these products




6001


603


606


607


650


95060


5130


5150


604


614


675

Series	Page MC-SLA-#	Max. Holding Capacity N [lbf.]							Plunger Travel mm [inch]				
		0 to 1000 [0 to 225]	1000 to 2000 [225 to 450]	2000 to 3000 [450 to 675]	3000 to 5000 [675 to 1125]	5000 to 7000 [1125 to 1575]	7000 to 10000 [1575 to 2250]	10000+ [2250+]	0 to 20 [0 to 0.79]	20 to 40 [0.79 to 1.57]	40 to 60 [1.57 to 2.36]	60 to 80 [2.36 to 3.15]	80 to 105 [3.15 to 4.13]
6001	1	●							●				
601	2	●							●				
6015	3			●					●				
603	5			●						●			
608	5				●						●		
605	7		●							●			
606	8		●							●			
607	9				●						●		
609	10		●							●			
610	11				●						●		
615	12		●							●			
620	13			●						●			
630	14							●			●		
640	15							●					●
650	16							●				●	
95030	17			●						●			
95040	17				●					●			
95050	17						●				●		
95060	17						●				●		
5130	19					●					●		
5131	19			●						●			
5133	19				●							●	
5150	19					●				●			
602	23	●							●				
604	23		●							●			
624	23				●							●	
6004	27		●							●			
614	29				●					●			
670	31							●			●		
675	31							●		●			
690	31							●				●	
695	31							●		●			

Dimensions and technical information are subject to change without notice

CLICK OR SCAN
To view full PDF catalog pages on these products

STRAIGHT LINE ACTION CLAMPS

Sizing and Application Chart

Overall Height mm [inch]						Overall Length mm [inch]							Overal Width mm [inch]					Suitable Application Areas							Standard Material				Service Environ-ment	
0 to 40 [0 to 1.57]	40 to 60 [1.57 to 2.36]	60 to 80 [2.36 to 3.15]	80 to 100 [3.15 to 3.94]	100 to 120 [3.15 to 4.72]	120 to 140 [4.72 to 5.51]	60 to 80 [2.36 to 3.15]	80 to 120 [2.36 to 4.72]	120 to 160 [4.72 to 6.30]	160 to 200 [6.30 to 7.87]	200 to 240 [7.87 to 9.45]	240 to 280 [9.45 to 11.02]	280+ [11.02+]	0 to 30 [0 to 1.18]	30 to 45 [1.18 to 1.77]	45 to 60 [1.77 to 2.36]	60 to 75 [2.36 to 2.95]	75 to 90 [2.95 to 3.54]	Welding	Assembly	Checking Fixtures	Machining	Woodworking	Food Processing	Duty Cycle	Steel	Stainless Steel	Color Handles	Toggle Lock Plus	Normal	Harsh/Dirty
●						●								●				○	◎	◎	●	◎	○	○	✓	✓			✓	
●						●							●					○	◎	◎	●	◎	○	○	✓	✓			✓	
●						●								●				○	◎	◎	●	◎	○	○	✓	✓		✓	✓	
			●					●							●			◎	◎	◎	●	◎	○	○	✓	✓	✓	✓	✓	
				●				●							●			◎	◎	◎	●	◎	⊗	○	✓		✓		✓	
			●					●							●			●	◎	◎	●	◎	⊗	○	✓		✓		✓	
		●							●				●					●	◎	◎	●	◎	⊗	○	✓				✓	
			●					●							●			◎	◎	◎	●	◎	⊗	○	✓		✓		✓	
			●					●							●			●	◎	◎	●	◎	⊗	○	✓		✓		✓	
				●					●						●			○	◎	◎	●	◎	⊗	○	✓				✓	
	●									●					●			●	◎	◎	●	◎	⊗	○	✓		✓		✓	
	●											●			●			○	◎	◎	●	◎	⊗	○	✓		✓		✓	
			●					●							●			◎	◎	◎	○	◎	⊗	○	✓		✓	✓	✓	
				●				●							●			◎	◎	◎	○	◎	⊗	○	✓		✓		✓	
				●					●						●			◎	◎	◎	○	◎	⊗	○	✓		✓		✓	
				●					●							●		◎	◎	◎	○	◎	⊗	○	✓		✓		✓	
				●					●							●		◎	◎	◎	○	◎	⊗	○	✓		✓		✓	
				●					●							●		◎	◎	◎	○	◎	⊗	○	✓		✓		✓	
				●					●							●		◎	◎	◎	○	◎	⊗	○	✓		✓		✓	
				●						●						●		◎	◎	◎	○	◎	⊗	○	✓		✓		✓	
				●								●				●		◎	◎	◎	○	◎	⊗	○	✓		✓		✓	
				●							●					●		◎	◎	◎	○	◎	⊗	○	✓		✓		✓	
				●								●				●		◎	◎	◎	○	◎	⊗	○	✓		✓		✓	
				●							●					●		◎	◎	◎	○	◎	⊗	○	✓		✓		✓	

◎ Excellent/High ○ Fair/Medium ● Poor/Low ⊗ Not Recommended

DESTACO a DOVER company

PULL ACTION LATCH CLAMPS

Sizing and Application Chart

CLICK OR SCAN
To view full PDF catalog pages on these products















Series	Page MC-PAL-#	Max. Holding Capacity N [lbf.]						Plunger Travel mm [inch]					
		0 to 2000 [0 to 450]	2000 to 4000 [450 to 900]	4000 to 6000 [900 to 1350]	6000 to 10000 [1350 to 2250]	10000 to 20000 [2250 to 4500]	20000+ [4500+]	0 to 50 [0 to 1.97]	50 to 75 [14.97 to 2.95]	75 to 100 [2.95 to 3.94]	100 to 125 [3.94 to 4.92]	125 to 150 [4.92 to 5.91]	150+ [5.91+]
3031	1	●						●					
3051	1				●			●					
330	3	●							●				
351	3	●									●		
371	3		●									●	
381	3			●									●
323	7	●						●					
331	7		●					●					
341	7				●				●				
375	11					●				●			
385	13						●		●				
324	16		●					●					
334	16			●					●				
344	16				●				●				
374	16					●		●					
301	20	●									●		
311	20			●						●			
3011	21				●					●			
353	22			●	●	●		●					

Dimensions and technical information are subject to change without notice

CLICK OR SCAN
To view full PDF catalog pages on these products

PULL ACTION LATCH CLAMPS

Sizing and Application Chart

Overall Height mm [inch]						Overall Length mm [inch]						Overal Width mm [inch]						Standard Material					Hook Style			Service Environ-ment	
0 to 50 [0 to 1.97]	50 to 75 [14.97 to 2.95]	75 to 100 [2.95 to 3.94]	100 to 125 [3.94 to 4.92]	125 to 150 [4.92 to 5.91]	150+ [5.91+]	50 to 100 [1.97 to 3.94]	100 to 150 [3.94 to 5.91]	150 to 200 [5.91 to 7.87]	200 to 250 [5.91 to 9.84]	250 to 300 [5.91 to 11.81]	300 to 350 [11.81 to 13.78]	0 to 40 [0 to 1.57]	40 to 50 [1.57 to 1.97]	50 to 60 [1.97 to 2.36]	60 to 70 [2.36 to 2.76]	70 to 80 [2.76 to 3.15]	80 to 90 [3.15 to 3.54]	Duty Cycle	Steel	Stainless Steel	Color Handles	Toggle Lock Plus™	Fixed	Adjustable U-Hook	Adjustable J-Hook	Normal	Harsh/Dirty
●									●				●					○	✓	✓	✓	✓			✓	✓	
●									●				●					○	✓	✓	✓	✓			✓	✓	
●								●					●					○	✓	✓	✓				✓	✓	
●									●				●					○	✓	✓	✓	✓			✓	✓	
	●										●				●			○	✓	✓	✓	✓			✓	✓	
	●										●						●	○	✓	✓		✓			✓	✓	
●						●						●						○	✓	✓	✓	✓		✓		✓	
●								●					●					○	✓	✓	✓	✓		✓		✓	
	●								●					●				○	✓	✓	✓	✓		✓		✓	
			●							●							●	◎	✓		✓	✓		✓			✓
		●							●								●	◎	✓	✓		✓		✓			✓
		●				●						●						○	✓	✓	✓	✓		✓		✓	
							●					●			●			○	✓	✓	✓	✓		✓		✓	
					●			●								●		◎	✓		✓			✓			✓
					●											●		◎	✓		✓			✓			✓
●									●				●					○	✓	✓	✓		✓			✓	
	●								●							●		○	✓				✓			✓	
		●							●							●		◎	✓	✓			✓				✓
	●								●	●				●				◎	✓	✓			✓				✓

◎ Excellent/High ○ Fair/Medium ● Poor/Low ⊗ Not Recommended

SQUEEZE ACTION PLIER CLAMPS

Sizing and Application Chart

CLICK OR SCAN
To view full PDF catalog pages on these products



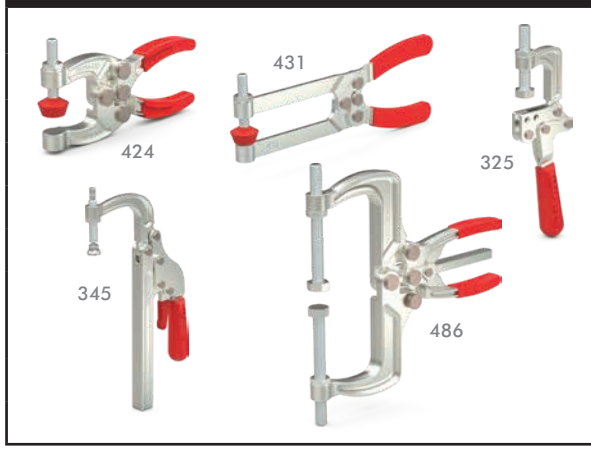

Series	Page MC-SAP-#	Max. Holding Capacity N [lbf.]						Maximum Clamping Thickness mm [inch]							
		0 to 1000 [0 to 225]	1000 to 2000 [225 to 450]	2000 to 3000 [450 to 675]	3000 to 4000 [675 to 900]	4000 to 5000 [900 to 1125]	5000 to 6000 [1125 to 1350]	0 to 10 [0 to 0.39]	10 to 20 [0.39 to 0.78]	20 to 30 [0.78 to 1.18]	30 to 40 [1.18 to 1.57]	40 to 60 [1.57 to 2.36]	60 to 80 [1.57 to 3.15]	80+ [2.26+]	Color Handles
325	1				●						●				✓
345	2				●									●	✓
424	3	●							●						
441	3		●							●					
431	4	●						●							
462	5				●					●					
463	5				●							●			
482	5						●			●					
484	5						●						●		
486	5					●								●	

Dimensions and technical information are subject to change without notice

CLICK OR SCAN
To view full PDF catalog pages on these products

MANUAL CLAMPING ACCESSORIES

See pages MC-ACC-1 to 10 for more information



PNEUMATIC TOGGLE CLAMPS

Sizing and Application Chart

CLICK OR SCAN
To view full PDF catalog pages on these products




812


858


8021


827


803


1200

Series	Page MC-PTC-#	Max. Holding Capacity N [lbf.]							Max. Exerting Force at 5bar [72PSI] N [lbf.]						
		0 to 1000 [0 to 225]	1000 to 2000 [225 to 450]	2000 to 3000 [450 to 675]	3000 to 5000 [675 to 1125]	5000 to 7000 [1125 to 1575]	7000 to 10000 [1575 to 2250]	10000+ [2250+]	0 to 1000 [0 to 225]	1000 to 2000 [225 to 450]	2000 to 3000 [450 to 675]	3000 to 4000 [675 to 900]	4000 to 5000 [900 to 1125]	5000 to 6000 [1125 to 1350]	6000 to 8000 [1350 to 1800]
812	1	●							●						
802	3	●								●					
807	5			●							●				
810	7				●							●			
846	9				●							●			
847	11				●								●		
8007	13				●						●				
858	15							●							●
8021	17		●						●						
8071	17		●								●				
817	19		●							●					
827	19				●						●				
868	21														●
803	23			●							●				
8031	24						●					●			
830	25							●				●			
850	26							●						●	
800*	27								●						
1200*	27								●						

*Pneumatic Single-Action Hold Down Clamp

CLICK OR SCAN
To view full PDF catalog pages on these products

PNEUMATIC TOGGLE CLAMPS

Sizing and Application Chart

Overall Height mm [inch]											Overall Length mm [inch]								Overal Width mm [inch]					Suitable Application Areas						Service Environment	
0 to 50 [0 to 1.97]	50 to 75 [1.97 to 2.95]	75 to 100 [2.95 to 3.94]	100 to 125 [3.94 to 4.92]	125 to 150 [4.92 to 5.91]	150 to 175 [5.91 to 6.89]	175 to 200 [6.89 to 7.87]	200 to 225 [7.87 to 8.86]	225 to 250 [8.86 to 9.84]	250 to 275 [9.84 to 10.83]	275+ [10.83+]	125 to 150 [4.92 to 5.91]	150 to 175 [5.91 to 6.89]	175 to 200 [6.89 to 7.87]	200 to 225 [7.87 to 8.86]	225 to 250 [8.86 to 9.84]	250 to 300 [9.84 to 11.81]	300 to 400 [11.81 to 15.75	400+ [15.75+]	20 to 40 [0.78 to 1.57]	40 to 60 [1.57 to 2.36]	60 to 80 [2.36 to 3.15]	80 to 100 [3.15 to 3.94]	100 to 120 [3.94 to 4.72]	Welding	Assembly	Light Machining	Duty Cycle	Accomodates Workpiece Variation	U-Bar Version	Solid Arm Version	Normal	Harsh/Dirty
●											●								●					●	○	●	●		✓		✓	
	●												●							●				○	○	●	○		✓		✓	
		●													●					●				○	○	○	○		✓	✓	✓	
		●														●					●			○	○	○	○		✓	✓	✓	
		●														●					●			○	○	○	○			✓	✓	
			●															●					●	○	○	○	○			✓	✓	
		●														●					●			○	○	○	○			✓	✓	
						●													●				●	○	○	○	○			✓	✓	
	●															●				●				○	○	○	○		✓			✓
	●															●					●			○	○	○	○		✓			✓
						●						●									●			○	○	○	○		✓	✓	✓	
								●						●						●				○	○	○	○		✓	✓	✓	
										●						●							●	○	○	○	○			✓	✓	
	●															●					●			○	○	○	○				✓	
	●													●							●			○	○	○	○					✓
		●														●					●			○	○	○	○				✓	
							●											●					●	○	○	○	○				✓	
●											●										●			○	○	●	●	✓				✓
	●												●								●			○	○	●	●	✓				✓

● Excellent/High ○ Fair/Medium ● Poor/Low ⊗ Not Recommended

DESTACO a DOVER company

PNEUMATIC SWING CLAMPS

Sizing and Application Chart

CLICK OR SCAN
To view full PDF catalog pages on these products



Series	Page MC-PSC-#	Bore Size mm [in]						Total Stroke mm [in]					Clamp Stroke mm [in]			Clamping Force N [lbf]										
		Less than 20 [0.79]	20 to 30 [0.79 to 1.18]	30 to 40 [1.18 to 1.57]	40 to 50 [1.57 to 1.97]	50 to 60 [1.97 to 2.36]	60+ [2.36+]	10 to 20 [0.39 to 0.78]	20 to 30 [0.78 to 1.18]	30 to 40 [1.18 to 1.57]	40 to 50 [1.18 to 1.57]	50 to 60 [1.18 to 1.57]	0 to 10 [0 to 0.39]	10 to 20 [0.39 to 0.78]	20 to 30 [0.78 to 1.18]	0 to 100	100 to 500	500 to 1000	1000 to 2000	Arm Rotation - Top of Stroke	Block Body Style	Threaded Body Style	Flanged Body Style	Sensor Ready	360° Arm Adjustability	Clamp Arm/Spindle Incl.	Manual Operation	Confined Space Operation
9522-2	1		●					●						●			●			✓			✓	✓				✓
9530-2	1			●				●						●				●		✓			✓	✓				✓
9540-2	1				●			●						●				●		✓			✓	✓				✓
9550-2	1					●		●						●				●		✓			✓	✓				✓
89R20	6		●						●				●			●					✓			✓	✓				
89R32	6			●					●				●				●				✓			✓	✓				
89R40-010	6				●					●			●				●				✓			✓	✓				
89R40-025	6				●						●			●			●				✓			✓	✓				
89R50	6					●						●		●				●			✓			✓	✓				
89R63	6						●					●		●				●			✓			✓	✓				
89B20	12		●						●				●			●					✓			✓	✓				
89B32	12			●					●				●				●				✓			✓	✓				
89B40	12				●				●				●				●				✓			✓	✓				
89B50	12					●				●				●				●			✓			✓	✓				
89B63	12						●		●				●						●		✓			✓	✓				
8115/8116	17	●							●				●								✓			✓	✓	✓			
8315/9316	17				●					●				●			●				✓			✓	✓	✓			
89E20	21		●						●				●			●						✓			✓				
89E32	21			●					●				●				●					✓			✓				
89E40	21				●				●				●				●					✓			✓				
89E50	21					●				●				●				●				✓			✓				
89E63	21						●		●				●						●			✓			✓				
8015/8016	26	●							●				●			●						✓		✓	✓	✓			
8215/8216	26			●						●				●			●					✓		✓	✓	✓			
8415/8416	26			●						●				●			●					✓		✓	✓	✓			
035-125	30		●						●					●		●						✓			✓				
035-132	30			●					●					●			●					✓			✓				
035-140	30				●					●				●			●					✓			✓				
035-150	30					●			●					●			●					✓			✓				
035-225	30		●						●					●		●							✓		✓				
035-232	30			●					●					●			●						✓		✓				
035-240	30				●				●					●			●						✓		✓				
035-250	30					●			●					●			●						✓		✓				
8725	35		●										●				●						✓			✓		✓
8732	35			●									●				●						✓			✓		✓
8740	35				●								●				●						✓			✓		✓
8750	35																						✓			✓		✓
6004-SW	40		N/A							●					●				●	✓			✓		✓	✓	✓	



Color handles available. See pg. 7 for more info.

Dimensions and technical information are subject to change without notice

CLICK OR SCAN
To view full PDF catalog pages on these products

PNEUMATIC POWER CYLINDERS

See pages MC-PPC-1 to 12 for more information



CLICK OR SCAN
To view full PDF catalog pages on these products

HYDRAULIC POWER CLAMPS

See pages MC-HYD-1 to 14 for more information



PNEUMATIC POWER CLAMPS

Sizing and Application Chart

CLICK OR SCAN
To view full PDF catalog pages on these products



Series	Page PC-ELC-#	Page PC-PPC-#	Holding Torque at 5 bar Nm [ft-lb]					Clamping Torque at 5 bar Nm [ft-lb]					Piston Diameter mm [in]						
			0 to 100 [0 to 74]	100 to 500 [74 to 369]	500 to 1000 [369 to 738]	1000 to 2000 [738 to 1475]	2000 to 4000 [1475 to 2950]	0 to 100 [0 to 74]	100 to 500 [74 to 369]	500 to 1000 [369 to 738]	1000 to 2000 [738 to 1475]	2000 to 4000 [1475 to 2950]	Less than 25 [0.98]	25 [0.98]	32 [1.26]	40 [1.57]	50 [1.97]	63 [2.48]	80 [3.15]
92W	1			●				●—●											
81L		1	●					●					●						
82L-4		5	●					●					●—●						
82L-3E		13	●—●					●—●						●—●		●			
TCC-2		29	●—●					●—●								●—●		●	
82M-3E		33		●		●—●			●—●							●		●	●
52H-3E		59				●													
870/871		71		●				●								●			
860/861		73			●				●								●		
890/891		73				●			●									●	
1000/1001		73				●				●								●—●	
82D		75		●				●—●								●		●	
84A		83	●—●					●—●								●—●			

Dimensions and technical information are subject to change without notice

CLICK OR SCAN
To view full PDF catalog pages on these products

PNEUMATIC POWER CLAMPS

Sizing and Application Chart

Material				Weight Kg [lbs]					Suitable Application Areas						Features							
Aluminum	Steel	Electric	Pneumatic	0 to 2 [0 to 4.41]	2 to 4 [4.41 to 8.82]	4 to 6 [8.82 to 13.23]	6 to 8 [13.23 to 17.64]	More than 8 [17.64]	0 to 0,5 [0 to 31]	0,5 to 1,0 [31 to 61]	1,0 to 2,0 [61 to 122]	More than 2,0 [122]	Welding	Assembly	Dirty Environment	End Effectors	Machining	Duty Cycle	Adjustable Opening Angle	Inductive Sensors Available	Dual Arms	Tolerance Compensating	Manual Version Available	Center Arm	Lateral Arms	Toggle Locking
●		●			●								○	○	○	○	○	○	✓	✓		✓		✓	✓	✓
●			●	●					●				⊗	○	○	○	○	○						✓		✓
●			●	●					●				○	○	○	○	○	○	✓	✓			✓	✓	✓	✓
●			●	●	●				●	●			○	○	○	○	○	○	✓	✓				✓	✓	✓
●			●	●	●	●				●	●	●	○	○	○	○	○	○	✓	✓		✓		✓	✓	✓
●			●	●	●			●		●	●	●	○	○	○	○	○	○	✓	✓			✓	✓	✓	✓
●			●		●								○	○	○	○	○	○	✓	✓			✓	✓	✓	✓
	●		●		●					●			⊗	○	○	●	○	○						✓		✓
	●		●		●							●	⊗	○	○	●	○	○						✓		✓
	●		●				●					●	⊗	○	○	●	○	○						✓		✓
	●		●					●				●	⊗	○	○	●	○	○						✓		✓
●			●		●	●					●	●	○	○	○	○	○	○		✓	✓					✓
●			●						●	●			○	○	○	○	○	○		✓	✓	✓		✓		

○ Excellent/High ○ Fair/Medium ● Poor/Low ⊗ Not Recommended

2002 SERIES

Vertical Hold Down Clamps | Product Overview

Features:
- Large hand clearance for improved safety
- Bolt pattern interchangeable with 202 Series
- Three times the holding capacity of 202 Series
- Hardened bushings at key pivot points
- Near vertical clamping contact
- BLK models feature a black, non-reflective finish
- 5 handle colors - see page MC-PRO-7 for details

Covered under one or more U.S./International Patents

Applications:
- Checking fixtures
- Assembly & test
- Light machining
- Woodworking

Also Available:
See page MC-ACC-1 for accessories

Accepts M6 or 1/4 spindle accessories

2002-U/USS
Flanged Base
U-Bar



-**USS** Stainless Steel Model



2002-U-LS-BLKⓘ
Blackout Series
Flanged Base
U-Bar



2002-S
Flanged Base
Solid Bar



2002-UB
Straight Base
U-Bar



2002-UB-LS-BLKⓘ
Blackout Series
Straight Base
U-Bar



2002-SB
Straight Base
Solid Bar



2002-UR/URSS
Flanged Base
U-Bar
DESTACO®
Toggle Lock Plus

-**URSS** Stainless Steel Model



2002-SRⓘ
Flanged Base
Solid Bar
DESTACO®
Toggle Lock
Plus



2002-UBR
Straight Base
U-Bar
DESTACO®
Toggle Lock
Plus



2002-SBRⓘ
Straight Base
Solid Bar
DESTACO®
Toggle Lock
Plus



2002-U207
Flanged Base
U-Bar
Interchangeable with 207 Series



2002-UR207
Flanged Base
U-Bar
Interchangeable with 207 Series
DESTACO®
Toggle Lock
Plus



2002-UF
Front Mount Base
U-Bar



Color Handles
Available on models in this series that use standard red handles.* Add **-Y**, **-G**, **-B**, **-K** to end of model number.

*Excludes Blackout Series, Toggle Lock Plus levers or dipped handles.



ⓘ This item is available upon request

Dimensions and technical information are subject to change without notice

Model	Max. Holding Capacity	Clamp Bar Opening(+10°)	Handle Opening (+10°)	Weight	Accessories (Supplied)		
					Bolt Retainer	Spindle Assembly	Flanged Washers
2002-U	[600 lbf] 2700 N	75°	66°	[0.48 lbs] 0,22 kg	--	215208-M	215105
2002-USS					--	202943-M	215905
2002-U-LS-BLKⓘ					--	--	215105-BLK
2002-S					2002115-E	--	--
2002-UB					--	215208-M	215105
2002-UB-LS-BLKⓘ					--	--	215105-BLK
2002-SB					2002115-E	--	--
2002-UR				[0.55 lbs] 0,25 kg	--	215208-M	215105
2002-URSS					--	202943-M	215905
2002-SRⓘ					2002115-E	--	--
2002-UBR					--	215208-M	215105
2002-SBRⓘ					2002115-E	--	--
2002-U207		90°	72°	[0.57 lbs] 0,26 kg	--	215208-M	215105
2002-UR207		75°	57°				
2002-UF			66°	[0.66 lbs] 0,30 kg	--	215208-M	215105

ⓘ This item is available upon request

Holding Capacities

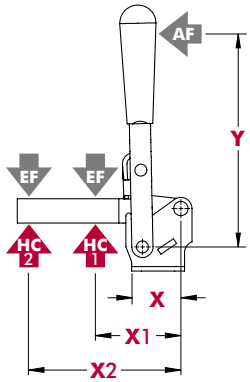

Model	X	X1	X2	Y	‡HC1	‡HC2	‡EF(X1):AF	‡EF(X2):AF
2002-( )	[1.12] 28,5	[1.45] 37	[2.64] 67	[3.66] 93	[600 lbf] 2700 N	[295 lbf] 1310 N	11:1	5:1

Dimensions shown "mm [inch]" ‡ **HC** = Holding Capacity, **EF** = Exerting Force, **AF** = Applied Force

See page MC-TEC-4 for additional information.

2002 SERIES

Vertical Hold Down Clamps | Dimensions | -U/-USS/-S/-UB/-SB/-UR/-URSS/-SR/-UBR/-SBR

2002-**U**
Flanged Base
U-Bar



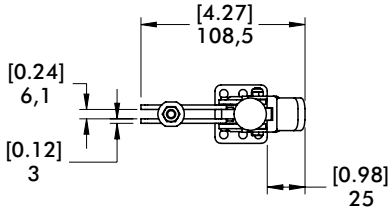

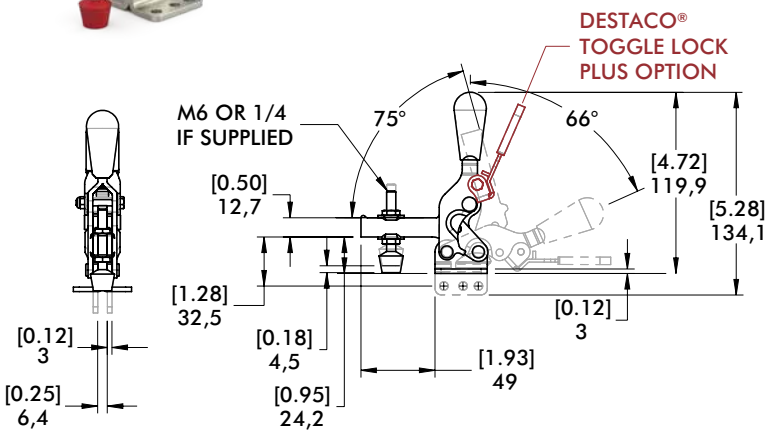

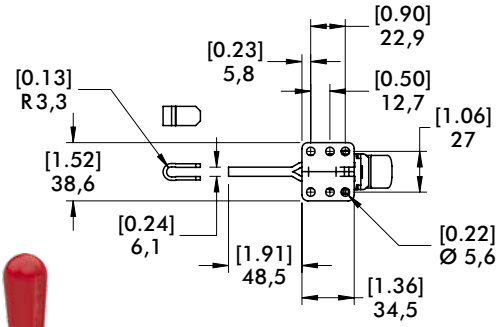

2002-**SB**
Straight Base
Solid Bar



mm [INCH]

THIRD ANGLE
PROJECTION

2002-U207/2002-UR207
with interchangeable Series 207
Mounting Pattern

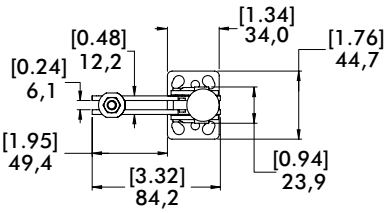

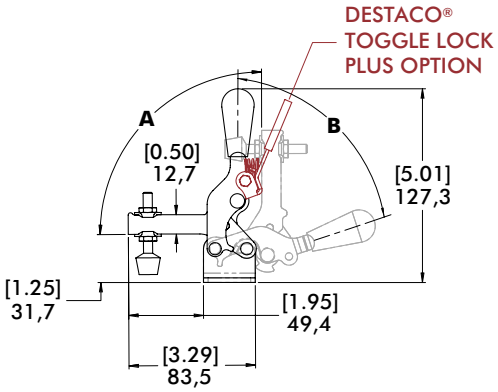

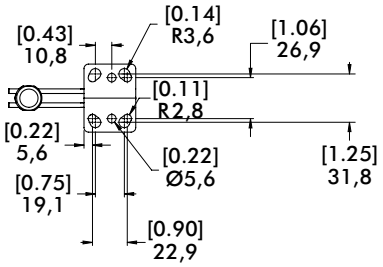

Model	A	B
2002-U207	90°	72°
2002-UR207	75°	57°

Dimensions and technical information are subject to change without notice

2002-UF
Flanged Base
U-Bar
DESTACO®
Toggle Lock
Plus



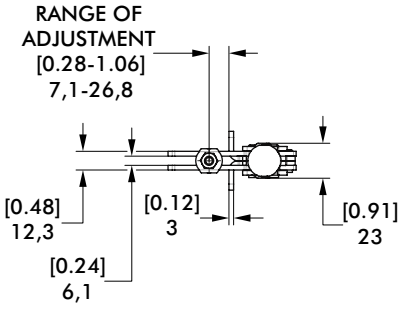

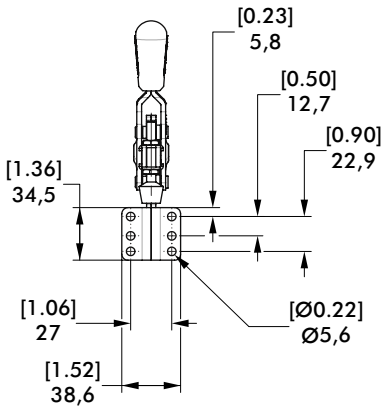

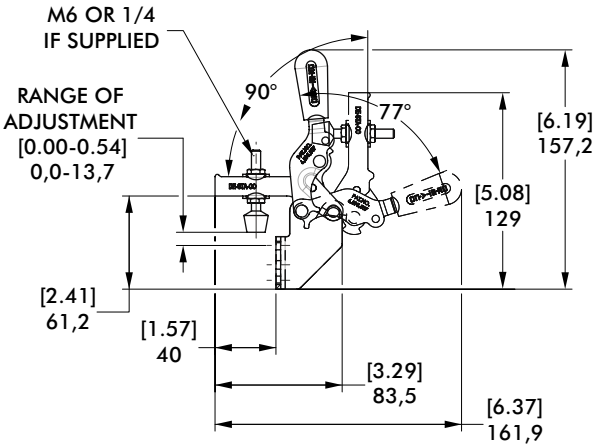

2007 SERIES

Vertical Hold Down Clamps | Product Overview

Features:
- Large hand clearance for improved safety
- Bolt pattern interchangeable with 207 Series
- Over two times the holding capacity of 207 Series
- Hardened bushings at key pivot points
- Near vertical clamping contact
- 5 handle colors - see page MC-PRO-7 for details

Covered under one or more U.S./International Patents

Applications:
- Checking fixtures
- Assembly & test
- Light machining
- Woodworking

Also Available:
See page MC-ACC-1 for accessories

Accepts M8 or 5/16 spindle accessories

2007-U/USS
Flanged Base
U-Bar



-**USS** Stainless Steel Model



2007-U-LS-BLK ⓘ
Blackout Series
Flanged Base
U-Bar



2007-S
Flanged Base
Solid Bar



2007-UB
Straight Base
U-Bar



2007-UB-LS-BLK ⓘ
Blackout Series
Straight Base
U-Bar



2007-SB
Straight Base
Solid Bar



2007-UR/URSS
Flanged Base
U-Bar
DESTACO®
Toggle Lock Plus



-**URSS** Stainless Steel Model



2007-SR ⓘ
Flanged Base
Solid Bar
DESTACO®
Toggle Lock
Plus



2007-UBR
Straight Base
U-Bar
DESTACO®
Toggle Lock
Plus



2007-SBR ⓘ
Straight Base
Solid Bar
DESTACO®
Toggle Lock
Plus



2007-UF
Front Mount Base
U-Bar



Color Handles
Available on models in this series that use standard red handles.* Add **-Y**, **-G**, **-B**, **-K** to end of model number.

*Excludes Blackout Series, Toggle Lock Plus levers or dipped handles.



Dimensions and technical information are subject to change without notice

Model	Max. Holding Capacity	Clamp Bar Opening (+10°)	Handle Opening (+10°)	Weight	Accessories (Supplied)		
					Bolt Retainer	Spindle Assembly	Flanged Washers
2007-U	[1000 lbf] 4450 N	76°	64°	[1.20 lbs] 0,54 kg	--	2007208-M	507107
2007-USS					--	207943-M	507907
2007-U-LS-BLKⓘ					--	--	507107-BLK
2007-S					2007115-E	--	--
2007-UB					--	2007208-M	507107
2007-UB-LS-BLKⓘ					--	--	507107-BLK
2007-SB					2007115-E	--	--
2007-UR					--	2007208-M	507107
2007-URSS					--	207943-M	507907
2007-SRⓘ					2007115-E	--	--
2007-UBR					--	2007208-M	507107
2007-SBRⓘ					2007115-E	--	--
2007-UF				[1.57 lbs] 0,71 kg	--	2007208-M	507107

ⓘ This item is available upon request

Holding Capacities

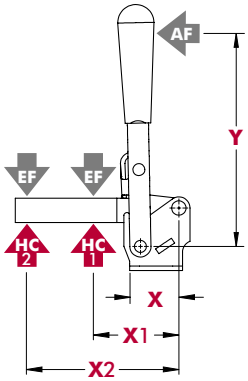

Model	X	X1	X2	Y	‡HC1	‡HC2	‡EF(X1):AF	‡EF(X2):AF
2007-( )	[1.59] 40,5	[1.95] 49,5	[3.92] 99,5	[5.16] 131	[1000 lbf] 4450 N	[470 lbf] 2090 N	10:1	5.3:1

Dimensions shown "mm [inch]" ‡ **HC** = Holding Capacity, **EF** = Exerting Force, **AF** = Applied Force
See page MC-TEC-4 for additional information.

2007 SERIES

Vertical Hold Down Clamps | Dimensions | -U/-USS/-S/-UB/-SB/-UR/-URSS/-SR/-UBR/-SBR

2007-U
Flanged Base
U-Bar



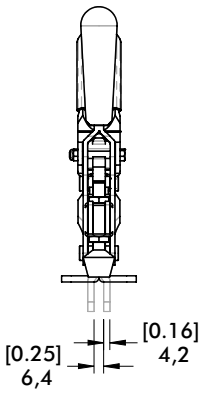

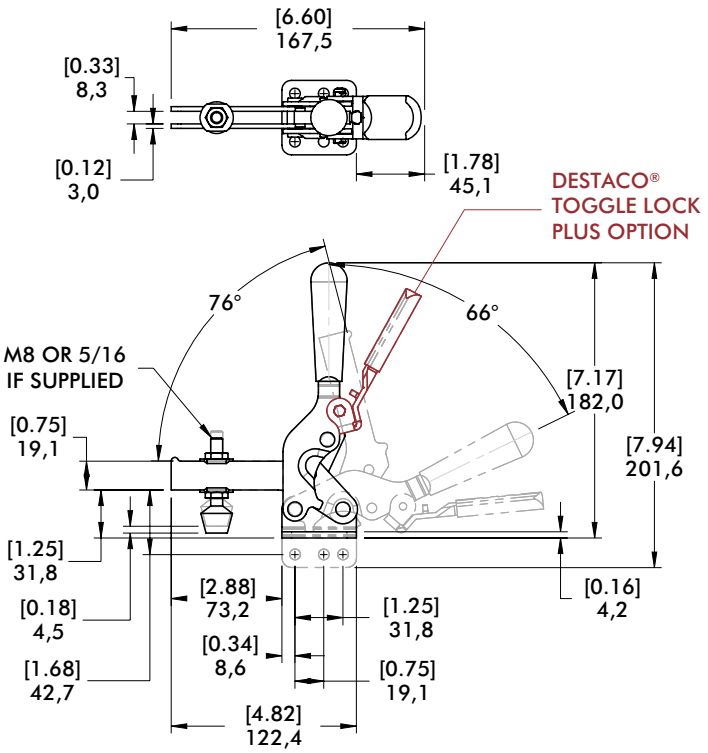

2007-SB
Straight Base
Solid Bar



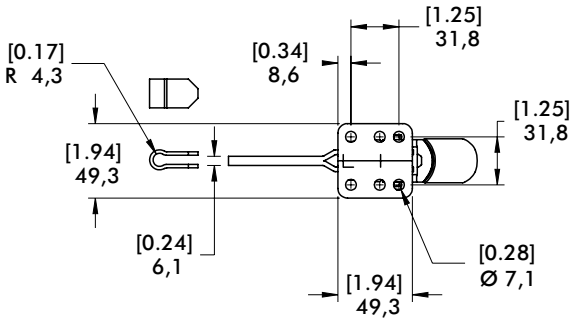

mm [INCH]

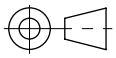

THIRD ANGLE
PROJECTION

Dimensions and technical information are subject to change without notice

2007-UF
Flanged Base
U-Bar
DESTACO®
Toggle Lock
Plus



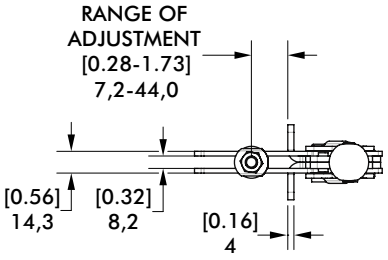

mm [INCH]

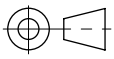

THIRD ANGLE
PROJECTION

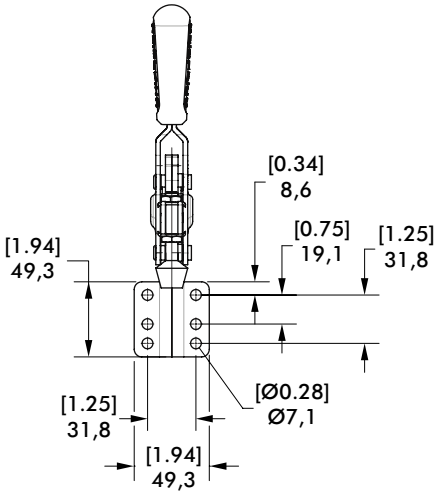

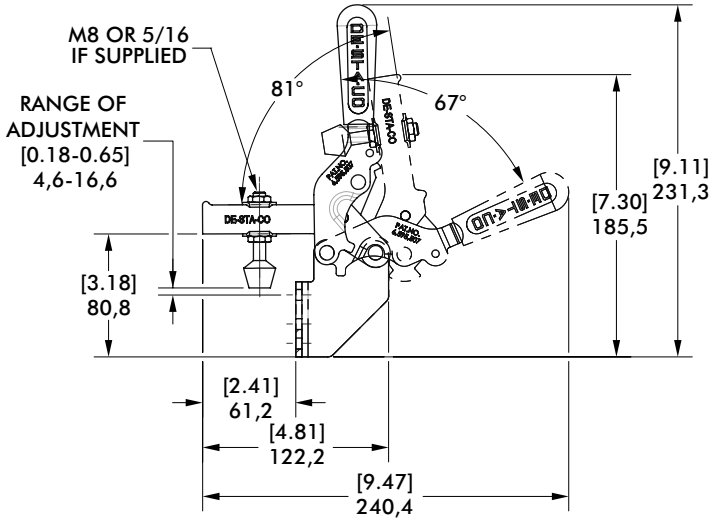

2010 SERIES

Vertical Hold Down Clamps | Product Overview

Features:
- Large hand clearance for improved safety
- Bolt pattern interchangeable with 210 Series
- Over two times the holding capacity of 210 Series
- Hardened bushings at key pivot points
- Near vertical clamping contact
- 5 handle colors - see page MC-PRO-7 for details

Covered under one or more U.S./International Patents

Applications:
- Checking fixtures
- Assembly & test
- Light machining
- Woodworking

Also Available:
See page MC-ACC-1 for accessories

Accepts M10 or 3/8 spindle accessories

2010-U
Flanged Base
U-Bar



2010-S
Flanged Base
Solid Bar



2010-UB
Straight Base
U-Bar



2010-SB
Straight Base
Solid Bar



2010-UR
Flanged Base
U-Bar
DESTACO® Toggle Lock Plus



2010-SRⓘ
Flanged Base
Solid Bar
DESTACO® Toggle Lock Plus



2010-UBR
Straight Base
U-Bar
DESTACO® Toggle Lock Plus



2010-SBRⓘ
Straight Base
Solid Bar
DESTACO® Toggle Lock Plus



Color Handles
Available on models in this series that use standard red handles.* Add **-Y**, **-G**, **-B**, **-K** to end of model number.

*Excludes Blackout Series, Toggle Lock Plus levers or dipped handles.



Technical Information

Model	Max. Holding Capacity	Clamp Bar Opening (+10°)	Handle Opening (+10°)	Weight	Accessories (Supplied)		
					Bolt Retainer	Spindle Assembly	Flanged Washers
2010-U	[1400 lbf] 6230 N	78°	66°	[2.56 lbs] 1,16 kg	---	240208-M	235106
2010-S					2010115-E	---	---
2010-UB					---	240208-M	235106
2010-SB					2010115-E	---	---
2010-UR					---	240208-M	235106
2010-SRⓘ					2010115-E	---	---
2010-UBR					---	240208-M	235106
2010-SBRⓘ					2010115-E	---	---

ⓘ This item is available upon request

Vertical Hold Down Clamps | Holding Capacities

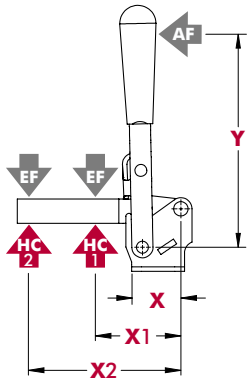

Model	X	X1	X2	Y	‡HC1	‡HC2	‡EF(X1):AF	‡EF(X2):AF
2010-( )	[2.04] 51,8	[2.44] 62	[4.88] 124	[7.00] 178	[1400 lbf] 6230 N	[720 lbf] 3200 N	13:1	6:1

Dimensions shown "mm [inch]" ‡ **HC** = Holding Capacity, **EF** = Exerting Force, **AF** = Applied Force
See page MC-TEC-4 for additional information.

Dimensions | -U/-S/-UB/-SB/-UR/-SR/-UBR/-SBR

2010-U
Flanged Base
U-Bar



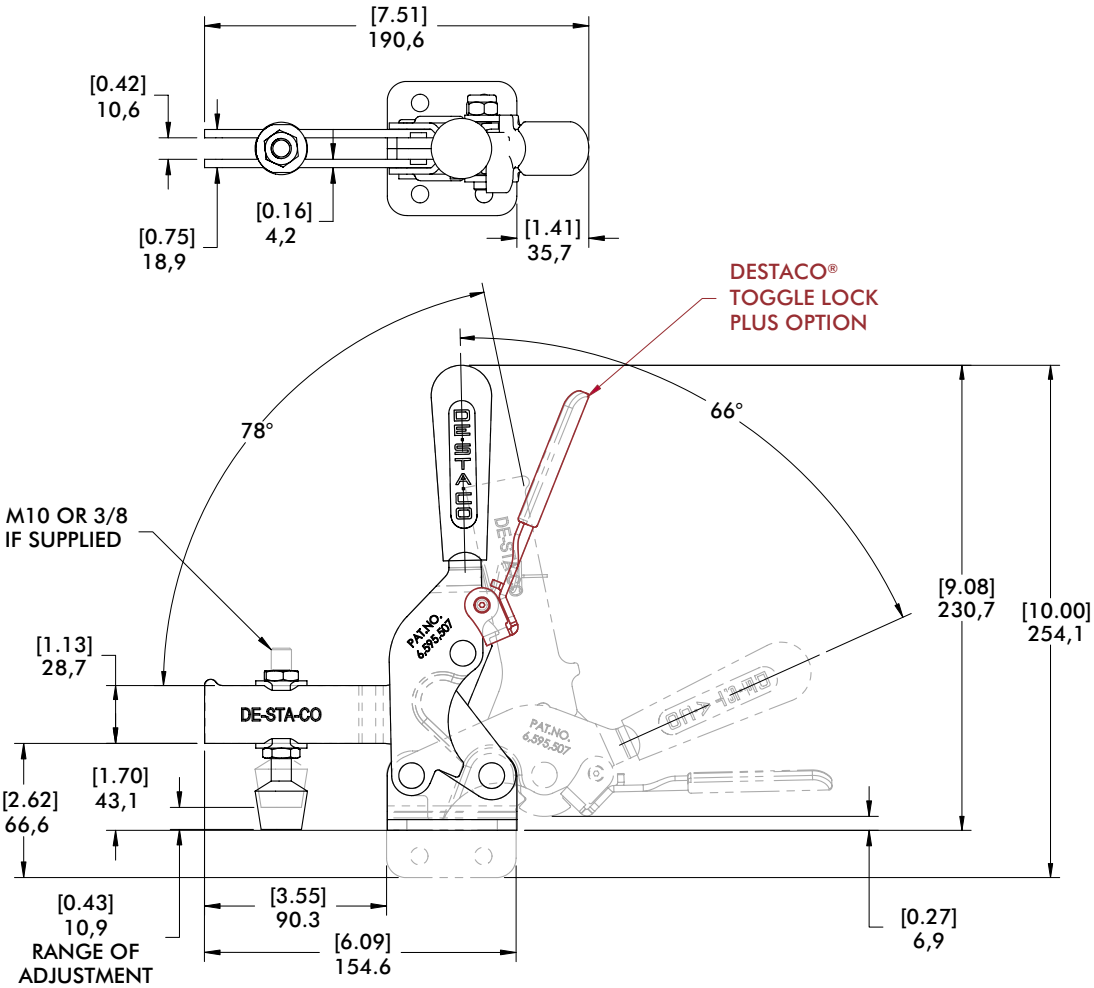

2010-SB
Straight Base
Solid Bar



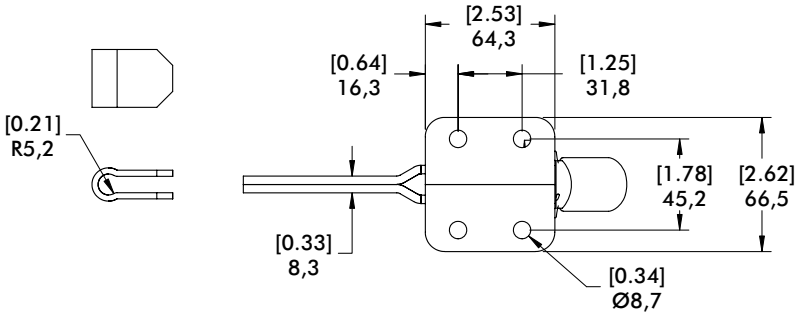

mm [INCH]
THIRD ANGLE
PROJECTION

201 SERIES

Vertical Hold Down Clamps | Product Overview

Features:
- Smallest series in the Vertical Handle series
- Stainless steel version available
- 5 handle colors - see page MC-PRO-7 for details

Applications:
- Checking fixtures
- Assembly & test
- Woodworking

Also Available:
See page MC-ACC-1 for accessories

812-U Pneumatic Toggle Clamp
(See page MC-PTC-1)

201-U/USS
Flanged Base
U-Bar



-USS Stainless Steel Model



201-UB
Straight Base



201-TU
Flanged Base
U-Bar
T-Handle



Color Handles
Available on models in this series that use standard red handles.* Add **-Y**, **-G**, **-B**, **-K** to end of model number.

*Excludes Blackout Series, Toggle Lock Plus levers or dipped handles.



Technical Information

Model	Max. Holding Capacity	Clamp Bar Opening (+10°)	Handle Opening (+10°)	Weight	Accessories (Supplied)	
					Spindle Assembly	Flanged Washers
201-U	[100 lbf] 440 N	100°	55°	[0.15 lbs] 0,70 kg	305208-M	102111
201-UB						
201-TU						
201-USS	560 N [125 lbf]				201943-M	102911

Holding Capacities

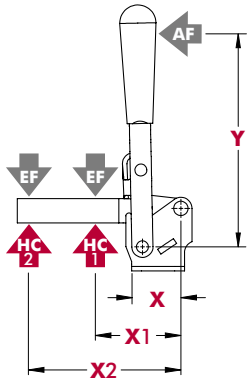

Model	X	X1	X2	Y	‡HC1	‡HC2	‡EF(X1):AF	‡EF(X2):AF
U/UB	[0.87] 22	[1.06] 27	[1.75] 44,5	[2.25] 57	[100 lbf] 440 N	[55 lbf] 245 N	9:1	6:1
TU				[1.38] 35			8.4:1	4:4:1
USS				[2.25] 57	[125 lbf] 560 N	[60 lbf] 270 N	9:1	6:1

Dimensions shown "mm [inch]" ‡ **HC** = Holding Capacity, **EF** = Exerting Force, **AF** = Applied Force
See page MC-TEC-4 for additional information.

Vertical Hold Down Clamps | Dimensions | -U/-UB/-TU/-USS

201-U
Flanged Base
U-Bar



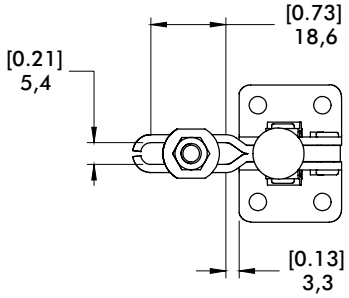

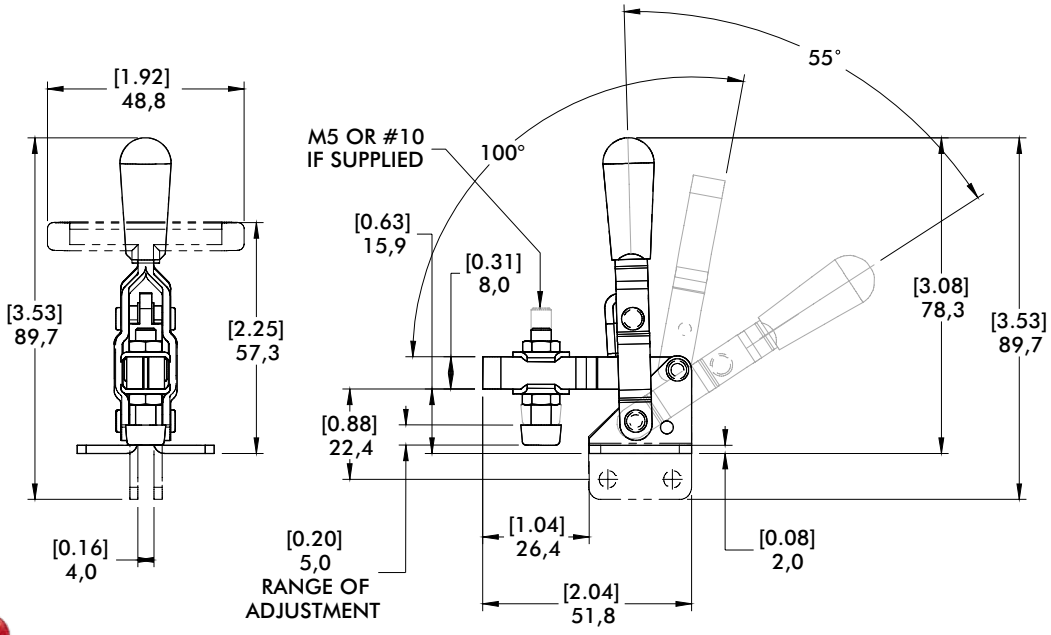

201-UB
Straight Base



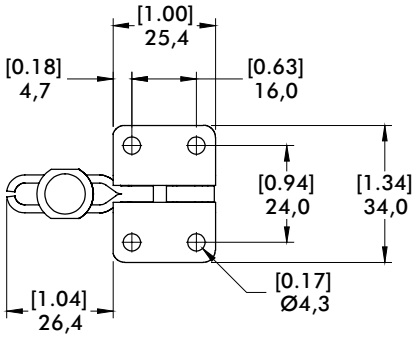

mm [INCH]
THIRD ANGLE
PROJECTION

202 SERIES

Vertical Hold Down Clamps | Product Overview

Features:
- Two bar styles available
- Low profile T-Handle version available
- Available in stainless steel
- Accommodates M6 or ¼" spindle accessories
- BLK models feature a black, non-reflective finish
- 5 handle colors - see page MC-PRO-7 for details

Applications:
- Checking fixtures
- Assembly & test
- Light machining
- Woodworking

Also Available:
See page MC-ACC-1 for accessories

802-U Pneumatic Toggle Clamp
(See page MC-PTC-3)

202-U/USS
Flanged Base
U-Bar



-**USS** Stainless Steel Model



202-UL
Flanged Base
Long U-Bar



202/-SS
Flange Base
Solid Bar



-**SS** Stainless Steel Model



202-UB
Straight Base
U-bar



202-B
Straight Base
Solid Bar



202-TU
Flanged Base
U-bar,
T-Handle



202-T
Flanged Base
Solid Bar
T-Handle



202-U-Lⓘ
Flanged Base
Open U-Bar



202-U-L-BLKⓘ
Blackout Series
Flanged Base
Open U-Bar



202-UB-Lⓘ
Straight Base
Open U-Bar



202-UB-L-BLKⓘ
Blackout Series
Straight Base
Open U-Bar



202305
Flanged Grip.
Provides added safety and protection. Fits all 202 Series (except T-Handle) clamps.
Order separately.



Color Handles
Available on models in this series that use standard red handles.*
Add **-Y**, **-G**, **-B**, **-K** to end of model number.

*Excludes Blackout Series, Toggle Lock Plus levers or dipped handles.



ⓘ This item is available upon request

Dimensions and technical information are subject to change without notice

202 SERIES

Vertical Hold Down Clamps | Technical Information

Model	Max. Holding Capacity	Clamp Bar Opening (+10°)	Handle Opening (+10°)	Weight	Accessories (Supplied)	
					Spindle Assembly	Flanged Washers
202-U	[200 lbf] 890 N	105°	65°	[0.35 lbs] 0,16 kg	202208-M	215105
202-UL						
202-USS	1110 N [250 lbf]				202943-M	215905
202	890 N [200 lbf]			[0.33 lbs] 0,15 kg	202208-M	---
202-SS	1110 N [250 lbf]				205943-M	---
202-UB	[200 lbf] 890 N			0,16 kg [0.35 lbs]	202208-M	215105
202-B				0,15 kg [0.33 lbs]		
202-TU				0,17 kg [0.38 lbs]		
202-T				[0.35 lbs] 0,16 kg	---	---
202-U-L ⓘ						
202-U-L-BLK ⓘ						
202-UB-L ⓘ						
202-UB-L-BLK ⓘ						

ⓘ This item is available upon request

Holding Capacities

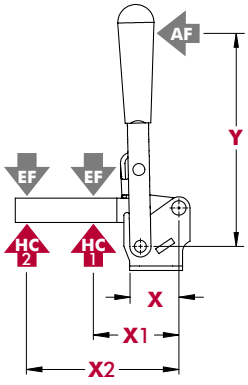

Model	X	X1	X2	Y	‡HC1	‡HC2	‡EF(X1):AF	‡EF(X2):AF
202-U	[0.79] 20	[1.25] 32	[2.25] 57	[3.42] 87	[200 lbf] 890 N	[140 lbf] 625 N	10:1	5:1
202-UL			[2.88] 73			[150 lbf] 670 N		4:1
202-USS			[2.25] 57	[3.00] 76	[250 lbf] 1110 N	[170 lbf] 760 N		5:1
202		---	[1.88] 48	[3.42] 87	---	[200 lbf] 890 N	---	8:1
202-SS				[3.00] 76	---	[250 lbf] 1110 N		
202-UB		[1.25] 32	[2.25] 57	[3.42] 87	[200 lbf] 890 N	[140 lbf] 625 N	10.1	5:1
202-B		---	[1.88] 48		---	[200 lbf] 890 N	---	8:1
202-TU		[1.25] 32	[2.25] 57	[2.13] 54	[200 lbf] 890 N	[140 lbf] 625 N	11:1	7:1
202-T		---	[1.88] 48		---	[200 lbf] 890 N	---	6:1
202-U-L ⓘ		[1.25] 32	[2.25] 57	[3.42] 87	[200 lbf] 890 N	[140 lbf] 625 N	10:1	5:1
202-U-L-BLK ⓘ								
202-UB-L ⓘ								
202-UB-L-BLK ⓘ								

Dimensions shown "mm [inch]" ‡ **HC** = Holding Capacity, **EF** = Exerting Force, **AF** = Applied Force

ⓘ This item is available upon request

202 SERIES

Vertical Hold Down Clamps | Dimensions | -U/-UL/-USS/-SS/-UB/-B/-TU/-T

202-U
Flanged Base
U-Bar



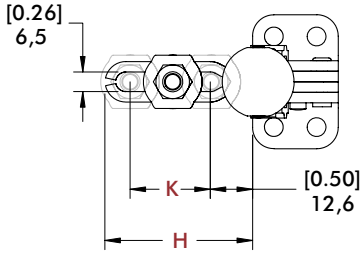

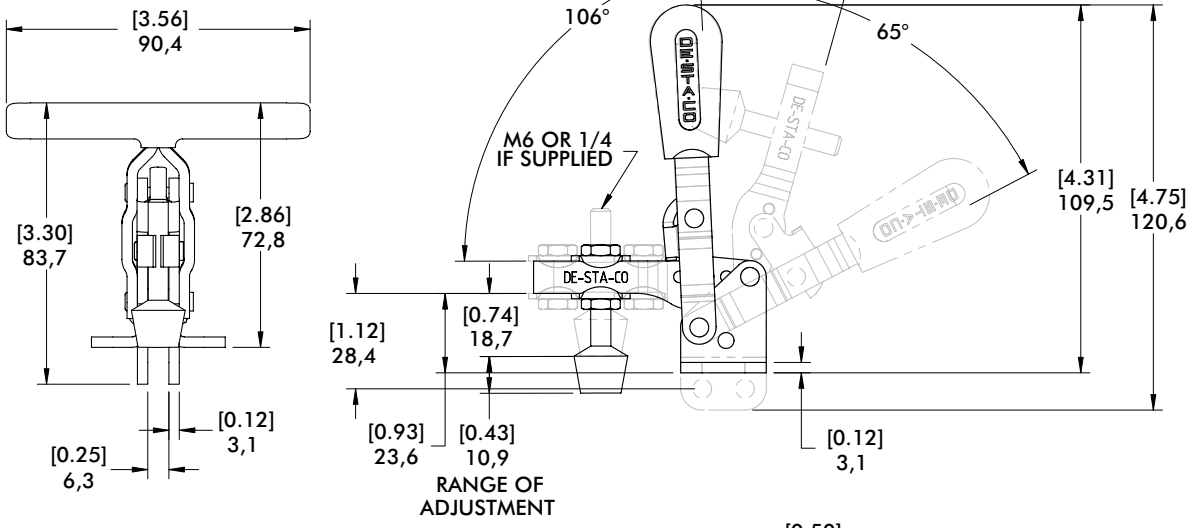

Open Bar Option

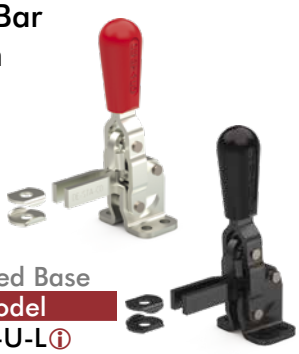

Flanged Base
Model
202-U-L ⓘ
202-U-L-BLK ⓘ

See page MC-ACC-7 for complete offering of open bar accessories

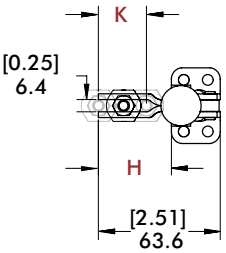



Straight Base
Model
202-UB-L ⓘ
202-UB-L-BLK ⓘ

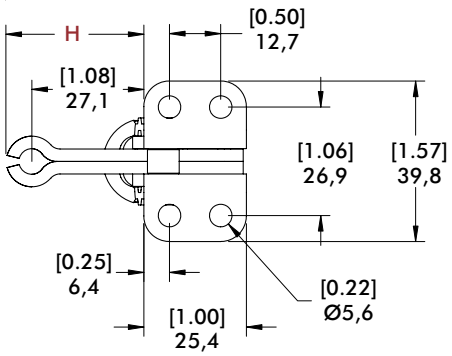

mm [INCH]
THIRD ANGLE
PROJECTION

Bar Style	Clamp Models	H	K
	202-U/202-UB/ 202-USS/202-TU	[1.73] 43,9	[0.98] 25
	202-UL ⓘ	[2.29] 58,1	[1.51] 38,4
	202/202-B/ 202-T/202-SS	[1.31] 33,3	---
	202-U-L ⓘ/ 202-UB-L ⓘ	[1.50] 38,1	[0.99] 25,1

ⓘ This item is available upon request

Dimensions and technical information are subject to change without notice

Application Areas

Clamping during the assembling, drilling, testing, gluing, locking of covers and much more. The vertical clamp is the most frequently used product whenever clamping products are to be integrated with a manual fixture.

The essential product features

- In the clamping position, the handle is vertical
- Vertical clamps open at an angle between 75° and 215°
- Vertical clamps are offered with U-shaped or heavy-duty solid clamping bars
- Vertical clamps have a straight or flanged base. The heavy-duty vertical clamps possess a base that can be welded on without a hole pattern

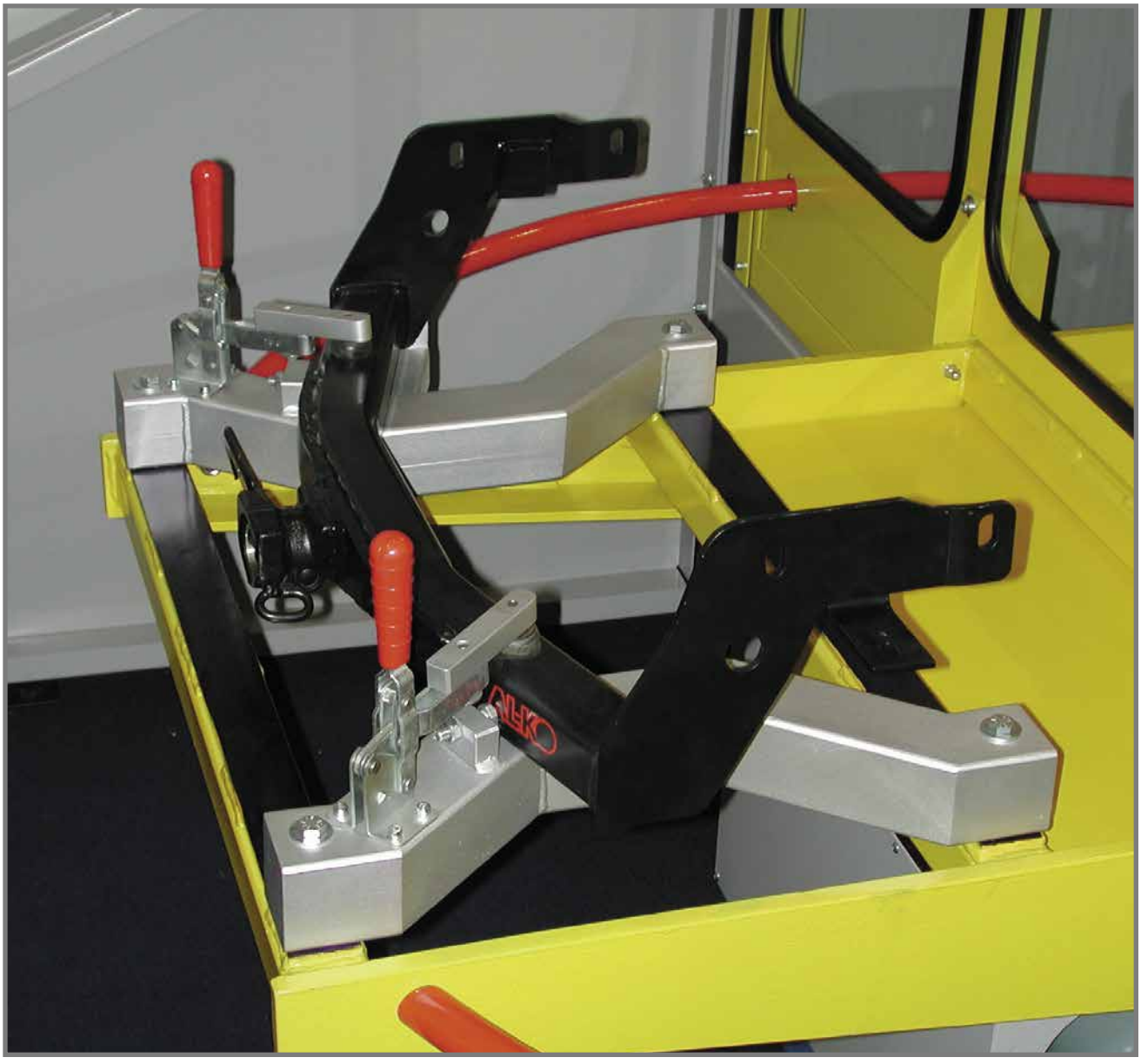

207 SERIES

Vertical Hold Down Clamps | Product Overview

Features:
- Largest selection of arm and mounting options
- Low profile T-Handle version available
- Available in stainless steel
- BLK models feature a black, non-reflective finish
- 5 handle colors - see page MC-PRO-7 for details

Applications:
- Checking fixtures
- Assembly & test
- Light machining
- Woodworking

Also Available:
See page MC-ACC-1 for accessories

807-U Pneumatic toggle clamp
(See page MC-PTC-6)

807-S Pneumatic toggle clamp
(See page MC-PTC-6)

Accepts M8 or 5/16 spindle accessories

207-U
Flanged Base
U-Bar



-USS Stainless Steel Model



207-UL
Flanged Base
Long U-Bar



207-S
Flanged Base
Solid Bar



207-L
Flanged Base
Long Solid Bar



207-TU
Flanged Base
T-Handle
U-Bar



207-TUL
Flanged Base
T-Handle
Long U-Bar



207-UR
Flanged Base
U-Bar
DESTACO®
Toggle Lock
Plus



207-LR
Flanged Base
Long Solid Bar
DESTACO®
Toggle Lock
Plus



207-UB
Straight Base
U-Bar



207-ULB
Straight Base
Long U-Bar



207-SB
Straight Base
Solid Bar



207-LB
Straight Base
Long Solid
Bar



207-LBRⓘ
Straight Base
Long Solid Bar
DESTACO®
Toggle Lock
Plus



207-UFⓘ
U-Bar
Dual Mount



207-SFⓘ
Solid Bar
Dual Mount



207-U-Lⓘ
Flange Base
Open Bar



207-U-L-BLK
Blackout Series
Flanged Base
Open U-Bar



207-UB-Lⓘ
Straight Base
Open Bar



207-UB-L-BLK
Blackout Series
Straight Base
Open U-Bar



207305
Flanged Grip. Provides added safety and protection. Fits all 207 Series (except T-Handle) clamps. Order separately.



ⓘ This item is available upon request

Color Handles
Available on models in this series that use standard red handles.* Add **-Y**, **-G**, **-B**, **-K** to end of model number.

*Excludes Blackout Series, Toggle Lock Plus levers or dipped handles.



Dimensions and technical information are subject to change without notice

Model	Max. Holding Capacity	Clamp Bar Opening (+10°)	Handle Opening (+10°)	Weight	Accessories (Supplied)		
					Bolt Retainer	Spindle Assembly	Flanged Washers
207-U 207-UR 207-UL	[375 lbf] 1670 N	99°	57°	0,30 kg [0.67 lbs] 0,45 kg [1.00 lbs] 0,30 kg [0.67 lbs]	---	225208-M	507107
207-USS	2000 N [450 lbf]			0,32 kg [0.70 lbs]	---	207943-M	507907
207-S 207-L 207-LR	[500 lbf] 2220 N			0,31 kg [0.69 lbs] 0,34 kg [0.74 lbs] 0,45 kg [1.00 lbs]	207105	---	---
207-UB 207-ULB	[375 lbf] 1670 N			[0.72 lbs] 0,33 kg	---	225208-M	507107
207-SB 207-LB 207-LBRⓘ	[500 lbf] 2220 N			0,31 kg [0.69 lbs] 0,34 kg [0.75 lbs] 0,45 kg [1.00 lbs]	207105	---	---
207-TU 207-TUL	[375 lbf] 1670 N			[0.72 lbs] 0,33 kg	---	---	507107
207-UFⓘ	1670 N [375 lbf]	96°	56°	0,43 kg [0.94 lbs]	---	225208-M	507107
207-SFⓘ	2220 N [500 lbf]	90°	57°	0,38 kg [0.84 lbs]	207105	---	---
207-U-Lⓘ	[375 lbf] 1670 N	99°		[0.84 lbs] 0,38 kg	---	---	507107
207-U-L-BLKⓘ							507107-BLK
207-UB-Lⓘ							507107
207-UB-L-BLKⓘ							507107-BLK

ⓘ This item is available upon request

Holding Capacities

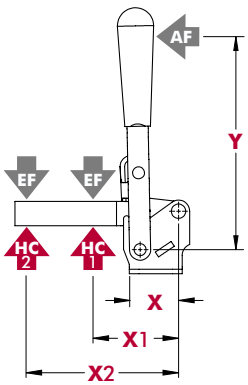

Model	X	X1	X2	Y	‡HC1	‡HC2	‡EF(X1):AF	‡EF(X2):AF
U/UB/UR	[1.28] 32,6	[2.00] 50,8	[3.75] 95,3	[4.90] 124,5	[375 lbf] 1670 N	[225 lbf] 1000 N	12:1	6:1
UL/ULB		[3.88] 98,5	[5.00] 127			[150 lbf] 670 N	7:1	4:1
USS		[2.00] 50,8	[3.75] 95,3		[450 lbf] 2000 N	[240 lbf] 1070 N	10:1	5:1
S/SB		[2.88] 73,0			[500 lbf] 2220 N	[350 lbf] 1560 N		7:1
L/LR LB/LBR		[2.88] 73,0	[5.00] 127					5:1
TU		[2.00] 50,8	[3.75] 95,3	[3.66] 9	[375 lbf] 1670 N	[225 lbf] 1000 N	6:1	4:1
TUL		[3.88] 98,5	[5.00] 127			[150 lbf] 670 N	4:1	3:1
U-L UB-L		[2.00] 50,8	[3.75] 95,3	[4.90] 124,5	[375 lbf] 1670 N	[2225 lbf] 1000 N	12:1	6:1

Dimensions shown "mm [inch]" ‡ **HC** = Holding Capacity, **EF** = Exerting Force, **AF** = Applied Force

207 SERIES

Vertical Hold Down Clamps | Dimensions | -U/-UL/-S/-L/-TU/-TUL/-UR/-LR/-UB/-ULB/-SB-/-LB/-LBR

207-U
Flanged Base
U-Bar



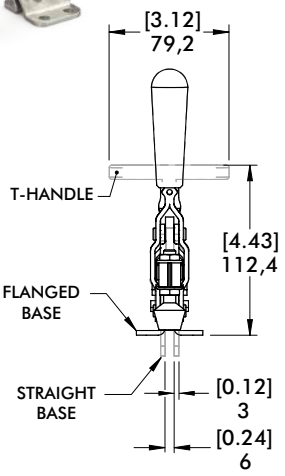

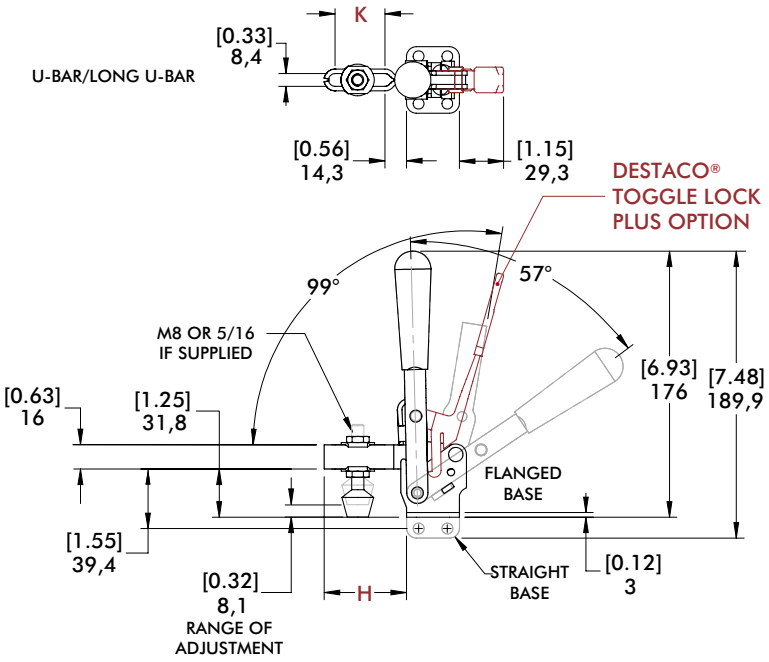

207-SB
Straight Base
Solid Bar



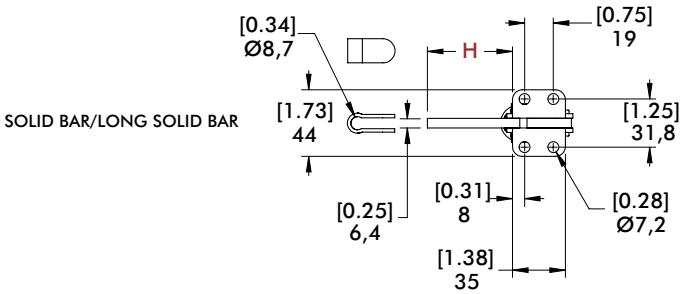

mm [INCH]

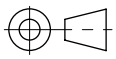

THIRD ANGLE
PROJECTION

Bar Style	Clamp Models	H	K
	207-U/207-UR/207-TU/207-UB	[2.14] 54,4	[1.30] 33
	207-UL/207-ULB/207-TUL	[3.84] 97,6	[2.94] 74,6
	207-S/207-SB	[2.21] 56,2	---
	207-L/207-LR/207-LB/207-LBR ⓘ	[3.48] 88,4	---

ⓘ This item is available upon request

Dimensions and technical information are subject to change without notice

Vertical Hold Down Clamps | Dimensions | Dual Mount

Model
207-SF ⓘ

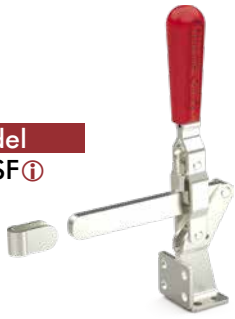

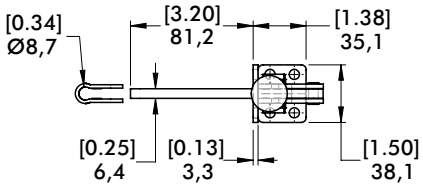

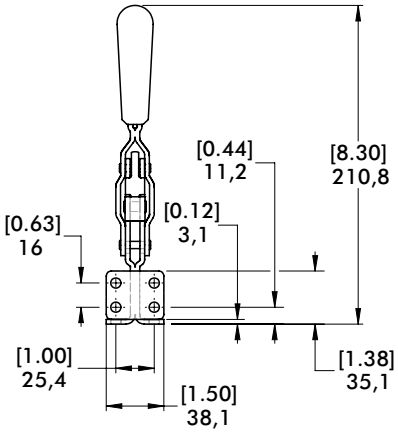

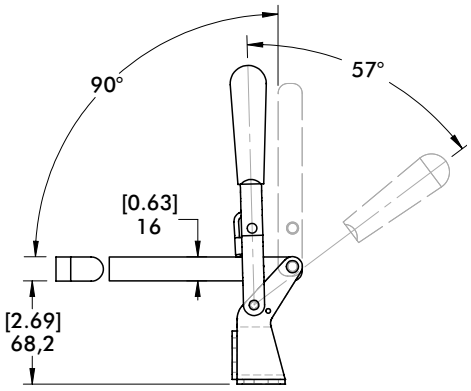

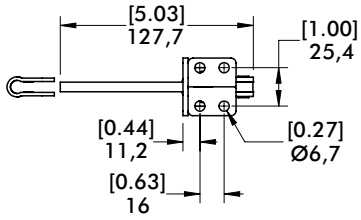



Model
207-UF ⓘ

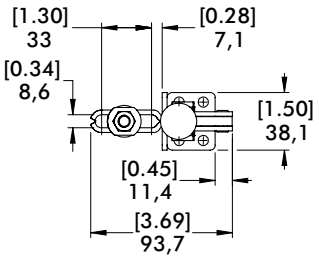

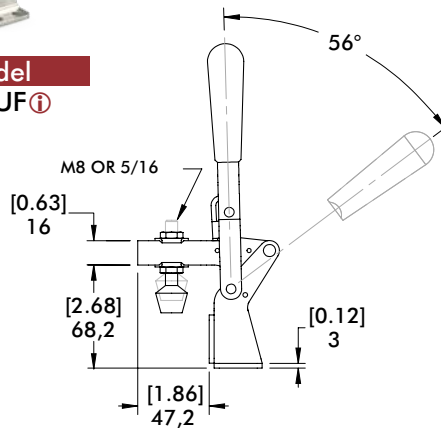

ⓘ This item is available upon request

Open Bar Option

See page MC-ACC-7 for Complete offering of Open bar accessories



Flanged Base
Model
207-U-L ⓘ
207-U-L-BLK ⓘ

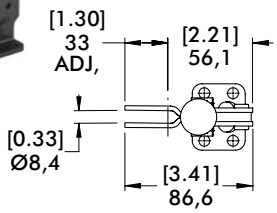



Straight Base
Model
207-UB-L ⓘ
207-UB-L-BLK ⓘ

mm [INCH]
THIRD ANGLE PROJECTION

Stainless Steel



Model
207-USS

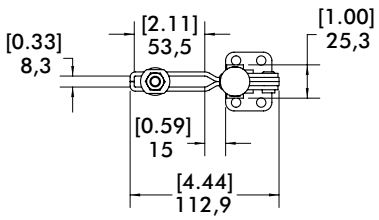

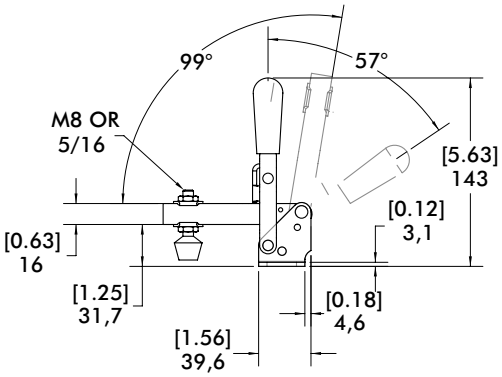

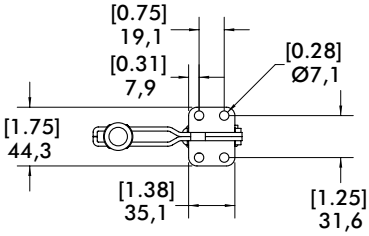

210 SERIES

Vertical Hold Down Clamps | Product Overview

Features:
- DESTACO® Toggle Lock Plus™ versions available
- Available in stainless steel
- Accommodates M10 or 3/8 spindle accessories
- 5 handle colors - see page MC-PRO-7 for details

Applications:
- Assembly & test
- Light machining
- Light welding

Also Available:
See page MC-ACC-1 for accessories
810-U Pneumatic Toggle Clamp
(See page MC-PTC-7)
810-S Pneumatic Toggle Clamp
(See page MC-PTC-7)

210-U/USS
Flanged Base
U-Bar



-USS Stainless Steel Model

210-S
Flanged Base
Solid Bar



210-UB
Straight Base
U-bar



210-SB
Straight Base
Solid Bar



210-UR
Flanged Base
U Bar
DESTACO®
Toggle Lock
Plus



210-SR
Flanged Base
Solid Bar
DESTACO®
Toggle Lock
Plus



210-TU
Flanged Base
U Bar
T-Handle



Color Handles
Available on models in this series that use standard red handles:* Add **-Y**, **-G**, **-B**, **-K** to end of model number.

*Excludes Blackout Series, Toggle Lock Plus levers or dipped handles.



Technical Information

Model	Max. Holding Capacity	Clamp Bar Opening (+10°)	Handle Opening (+10°)	Weight	Accessories (Supplied)		
					Bolt Retainer	Spindle Assembly	Flanged Washers
210-U	2670 N [600 lbf]	103°	58°	[1.29 lbs] 0,59 kg	---	240208-M	235106
210-USS	[750 lbf] 3340 N					237943-M	235906
210-S					210114	237943-M	---
210-UB	2670 N [600 lbf]				---	240208-M	235106
210-SB	3340 N [750 lbf]				210114	---	---
210-UR	2670 N [600 lbf]			[1.60 lbs] 0,73 kg	---	240208-M	235106
210-SR	3340 N [750 lbf]				210114	---	---
210-TU	2670 N [600 lbf]			0,62 kg [1.36 lbs]	---	---	235106

Dimensions and technical information are subject to change without notice

Vertical Hold Down Clamps | Holding Capacities

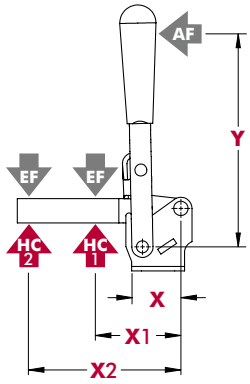

Model	X	X1	X2	Y	‡HC1	‡HC2	‡EF(X1):AF	EF(X2):AF
U/UB/UR	[1.54] 39	[2.38] 60,5	[4.88] 124	[6.75] 171,5	[600 lbf] 2670 N	[290 lbf] 1290 N	14:1	7:1
USS					[750 lbf] 3340 N	[360 lbf] 1600 N		
S/SR/SB		[3.62] 92,0	[5.25] 133	[4.50] 114,5	[750 lbf] 3340 N	[500 lbf] 2220 N	11:1	9:1
TU		[2.38] 60,5	[4.88] 124		[600 lbf] 2670 N	[290 lbf] 1290 N		5:1

Dimensions shown "mm [inch]" ‡ **HC** = Holding Capacity, **EF** = Exerting Force, **AF** = Applied Force
See page MC-TEC-4 for additional information.

Dimensions | -U/-USS/-S/-UB/-SB-/-UR/-SR/-TU

210-**U**
Flanged Base
U-Bar



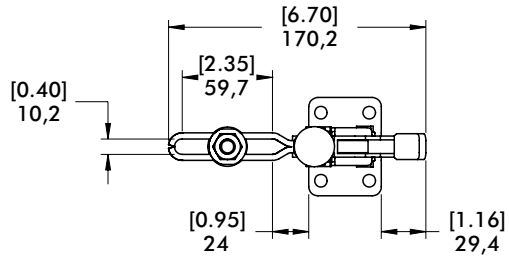

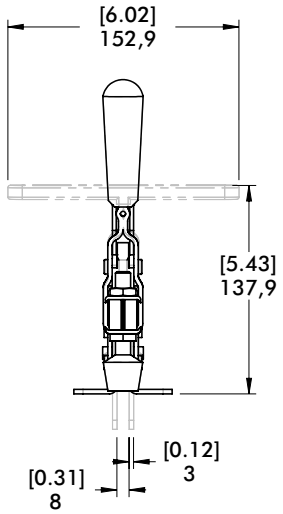

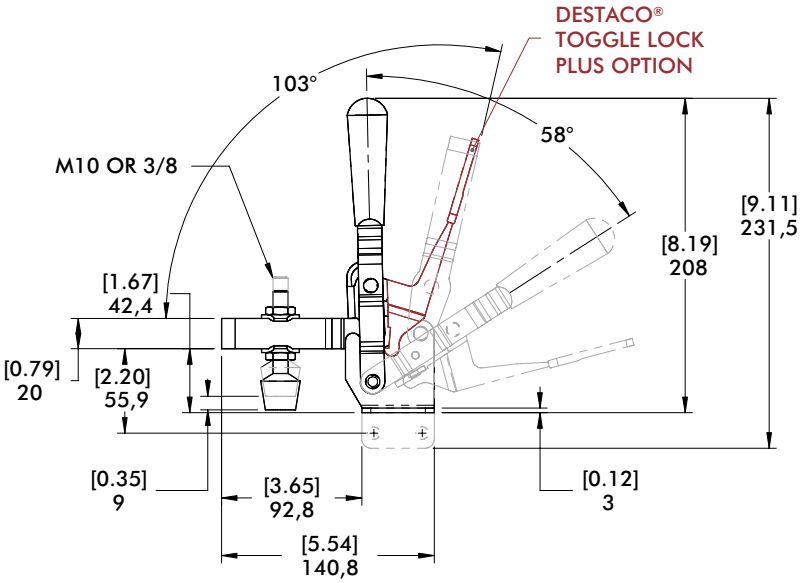

210-**SR**
Flanged Base
Solid Bar
with
DESTACO®
Toggle Lock
Plus™



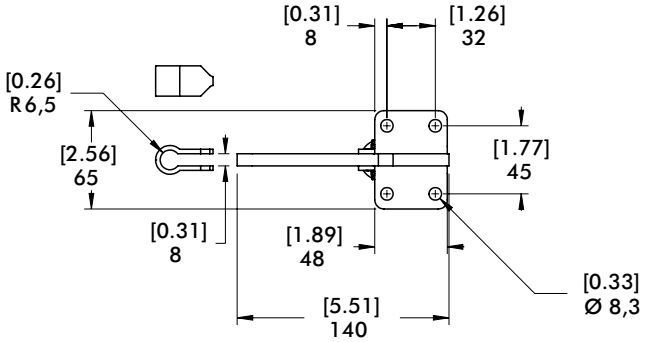

mm [INCH]
THIRD ANGLE PROJECTION

247, 267 SERIES

Vertical Hold Down Clamps | Product Overview

Features:
- Hardened steel bushings
- Large bar guides for greater lateral stability on Model 247
- Series 247 accommodates M12 or 1/2 spindle accessory
- Series 267 accommodates M16 or 5/8 spindle accessory
- 5 handle colors - see page MC-PRO-7 for details

Applications:
- Assembly & test
- Light machining
- Welding

Also Available:
See page MC-ACC-1 for accessories
847-U Pneumatic Toggle Clamp
(See page MC-PTC-13)
847-S Pneumatic Toggle Clamp
(See page MC-PTC-13)

247-U
Flanged Base
U-Bar



247-S
Flanged Base
Solid Bar



267-U
Flanged Base
U-Bar



267-Sⓘ
Flanged Base
Solid Bar



Color Handles
Available on models in this series that use standard red handles.* Add **-Y**, **-G**, **-B**, **-K** to end of model number.

*Excludes Blackout Series, Toggle Lock Plus levers or dipped handles.



Note:
Clamps shown with included accessories.

Technical Information

Model	Max. Holding Capacity	Clamp Bar Opening (+10°)	Handle Opening (+10°)	Weight	Accessories (Supplied)		
					Bolt Retainer	Spindle Assembly	Flanged Washers
247-U	[1000 lbf] 4400 N	120°	67°	1,07 kg [2.36 lbs]	---	247208-M	247109
247-S				1,08 kg [2.36 lbs]	247110	---	---
267-U	[1200 lbf] 5340 N	140°	72°	2,18 kg [4.80 lbs]	---	267203-M	267102
267-Sⓘ				1,98 kg [4.36 lbs]	110122	---	---

ⓘ This item is available upon request

Holding Capacities

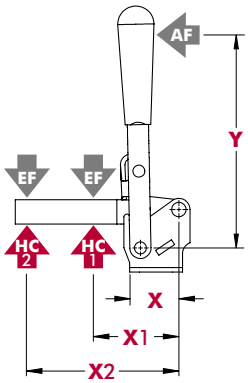

Model	X	X1	X2	Y	‡HC1	‡HC2	‡EF(X1):AF	‡EF(X2):AF
247-U	[1.69] 43	[3.00] 76,2	[6.13] 155,7	[6.71] 170,5	[1000 lbf] 4450 N	[480 lbf] 2140 N	12:1	6:1
247-S		[4.56] 115,8	[7.00] 177,8			[650 lbf] 2900 N	10:1	5:1
267-U	[2.50] 63,5	[4.00] 101,6	[8.00] 203,2	[9.25] 235	[1200 lbf] 5340 N	[600 lbf] 2670 N	18:1	8:1
267-Sⓘ		[6.00] 152,4	[8.75] 222,3			[820 lbf] 3650 N	12:1	

Dimensions shown "mm [inch]" ‡ **HC** = Holding Capacity, **EF** = Exerting Force, **AF** = Applied Force
See page MC-TEC-4 for additional information. ⓘ This item is available upon request

Dimensions and technical information are subject to change without notice

247-U
Flanged Base
U-Bar



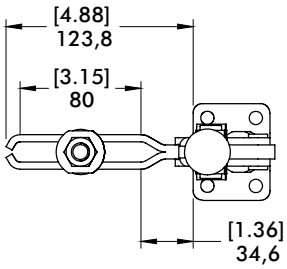

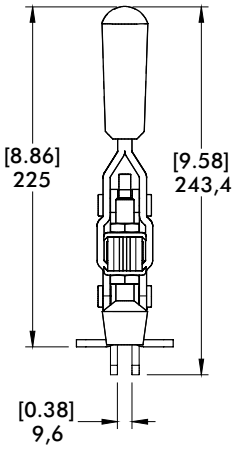

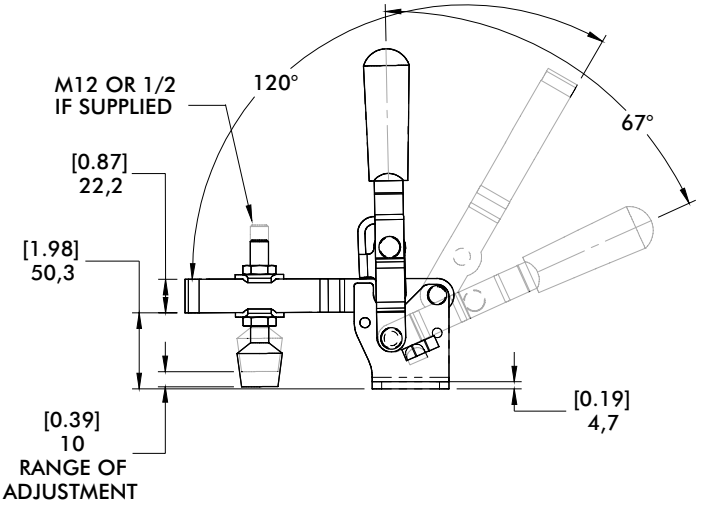

247-S
Flanged Base
Solid Bar



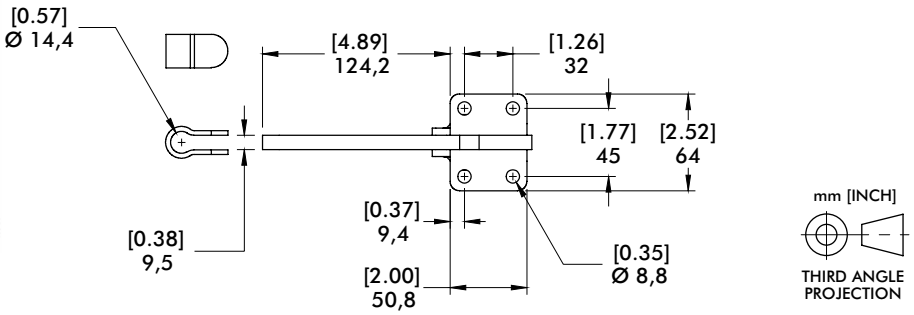

267 SERIES

Vertical Hold Down Clamps | Dimensions

267-U
Flanged Base
U-Bar



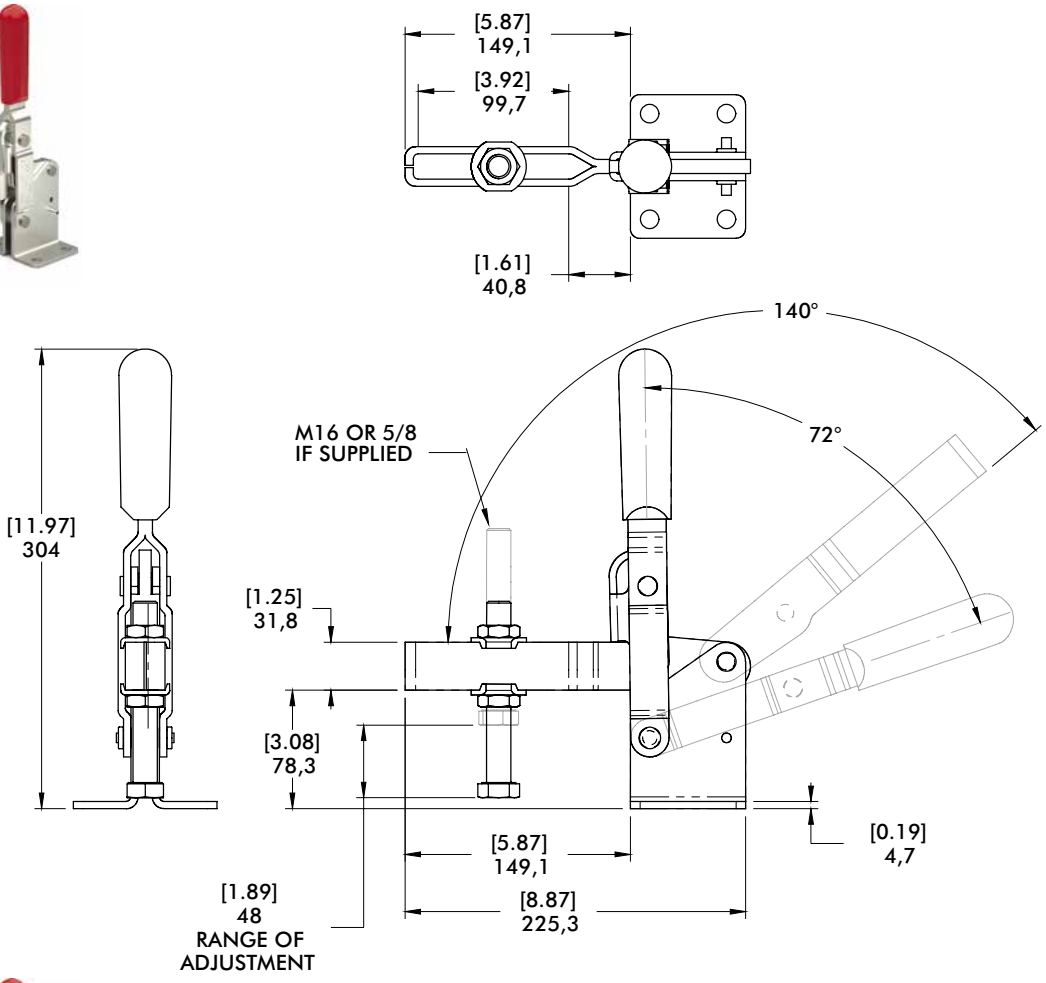

267-Sⓘ
Flanged Base
Solid Bar



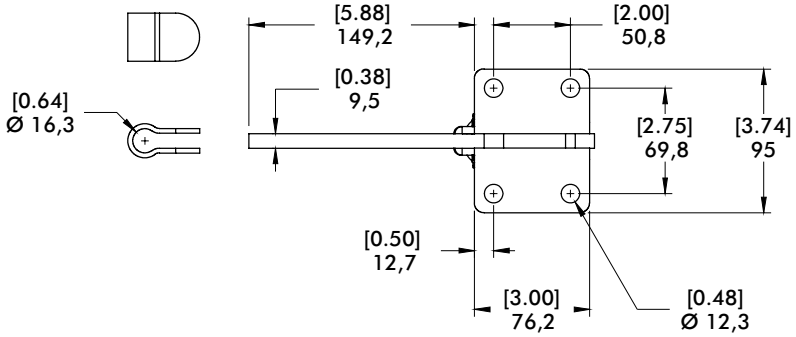

mm [INCH]

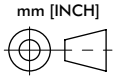

THIRD ANGLE
PROJECTION

Dimensions and technical information are subject to change without notice

VERTICAL HOLD DOWN CLAMPS

Application Examples

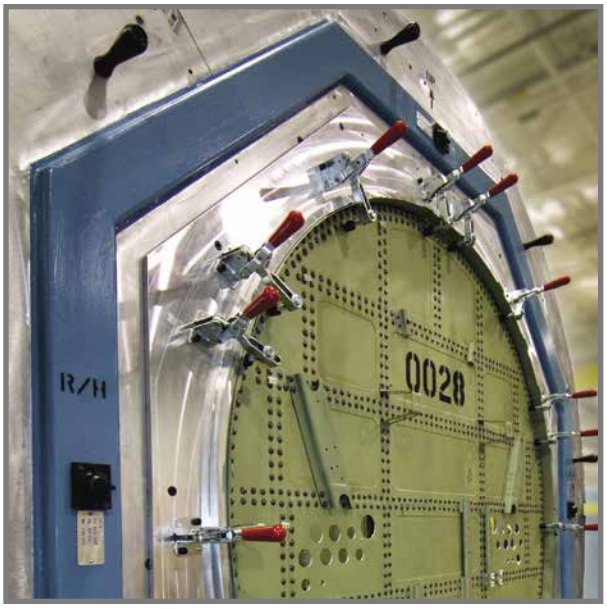

Model 210-**U**
used in an airframe
assembly fixture



Model 210-**U**
shown being used
in a checking fixture
application.

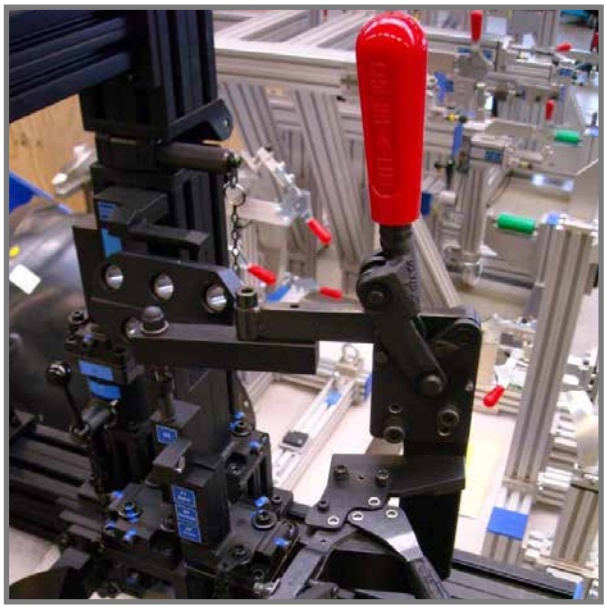

Model 533-**LB**
and 227-**UB** shown
with black finish in
a fixture for used for
optical inspection.

5905, 5910, 5915 SERIES

Heavy-Duty Vertical Hold Down Clamps | Product Overview

Features:
- High strength forged clamping arm for heavy-duty service
- Hardened steel pivot pins and bushings provide long life
- Black oxide finish
- 5 handle colors - see page MC-PRO-7 for details

Applications:
- Welding fixtures
- Assembly fixtures



5905/5910/5915
Flanged Base



5905-**B**/5910-**B**/5915-**B**
Solid Base



Color Handles
Available on models in this series that use standard red handles.* Add **-Y**, **-G**, **-B**, **-K** to end of model number.

*Excludes Blackout Series, Toggle Lock Plus levers or dipped handles.



Technical Information

Model	Max. Holding Capacity	Clamp Bar Opening (+10°)	Handle Opening (+10°)	Weight
5905	[750 lbf] 3340N	135°	70°	[1.08 lbs] 0,49 kg
5905-B				[0.82 lbs] 0,37 kg
5910	[1600 lbf] 7120N	132°	71°	[2.84 lbs] 1,29 kg
5910-B				[2.24 lbs] 1,02 kg
5915	[2750 lbf] 12230N	147°	74°	[6.16 lbs] 2,79 kg
5915-B				[5.11 lbs] 2,32 kg



Removable handle stop can be repositioned to limit opening angle to 90°.

Holding Forces

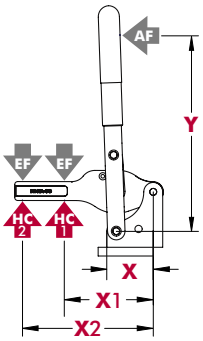

Model	X	X1	X2	Y	‡HC1	‡HC2	‡EF(X1):AF	‡EF(X2):AF
5905	[1.25] 31.9	[2.44] 62	[3.46] 88	[5.31] 135	[750 lbf] 3340 N	[525 lbf] 2335 N	10:1	8:1
5910	[1.87] 47.6	[3.34] 85	[5.12] 130	[6.88] 175	[1600 lbf] 7120 N	[1025 lbf] 4550 N	12:1	5:1
5915	[2.50] 63.5	[4.49] 114	[6.89] 175	[9.05] 230	[2750 lbf] 12230 N	[1790 lbf] 7960 N	10:1	7:1

Dimensions shown "mm [inch]" ‡ **HC** = Holding Capacity, **EF** = Exerting Force, **AF** = Applied Force
See page MC-TEC-4 for additional information.

5905, 5910, 5915 SERIES

Heavy-Duty Vertical Hold Down Clamps | Dimensions

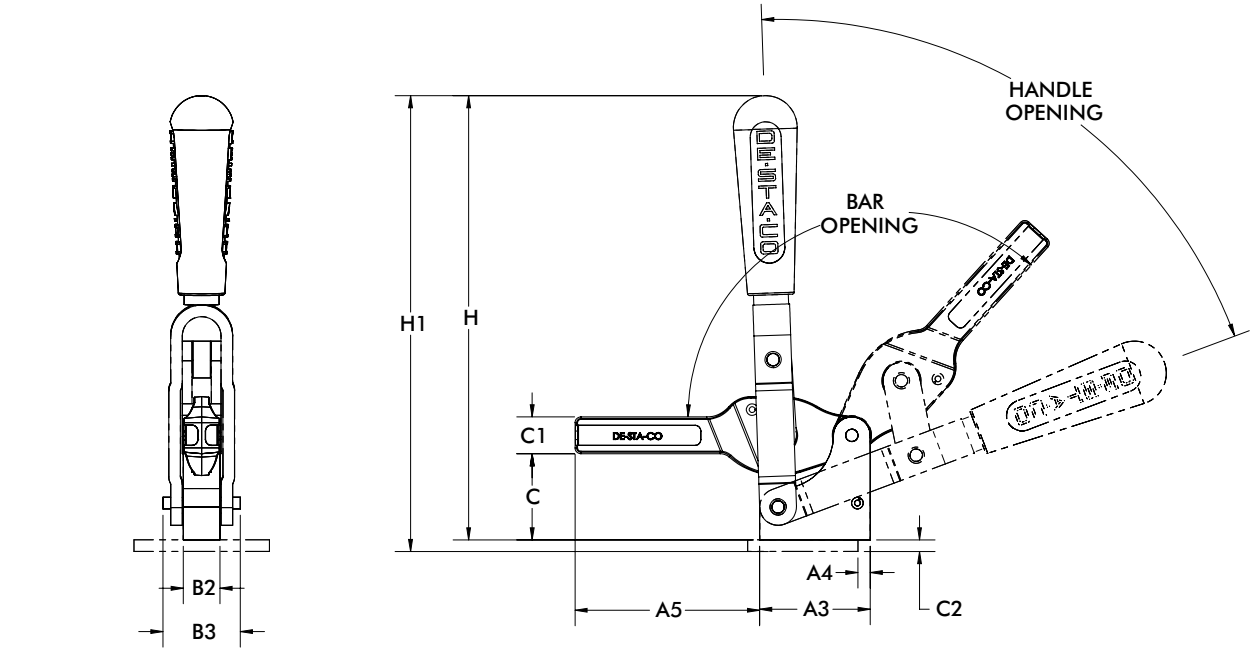



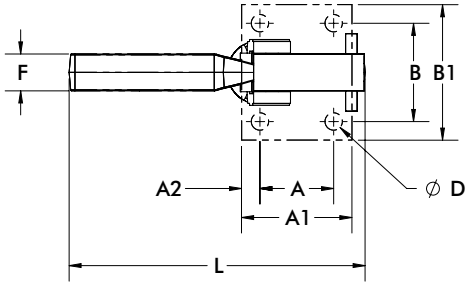

mm [INCH]

THIRD ANGLE
PROJECTION

Model	A	A1	A2	A3	A4	A5	B	B1	B2	B3	C	C1	C2	D	F	H	H1	L
5905	[1.00] 25,4	[1.50] 38,1	[0.25] 6,4	[1.51] 38,4	[0.25] 6,4	[2.49] 63,2	[1.50] 38,1	[2.13] 54,1	[0.59] 15,0	[1.02] 25,9	[1.27] 32,3	[0.51] 12,9	[0.24] 6,1	[0.29] 7,3	[0.56] 14,2	[6.51] 165,4	[6.75] 171,4	[4.02] 102.10
5910	[1.50] 38,1	[2.24] 56,9	[0.37] 9,4	[2.25] 57,2	[0.25] 6,4	[3.76] 95,5	[2.00] 50,8	[2.76] 70,1	[0.75] 19,1	[1.57] 39,9	[1.75] 44,5	[0.75] 19,1	[0.24] 6,1	[0.41] 10,5	[0.75] 19,1	[9.04] 229,5	[9.27] 235,5	[6.02] 152.88
5915	[2.00] 50,8	[2.95] 74,9	[0.48] 12,2	[2.99] 75,9	[0.38] 9,7	[5.00] 127,0	[2.75] 69,9	[3.88] 98,6	[0.98] 24,9	[1.97] 50,0	[2.37] 60,2	[1.00] 25,4	[0.35] 8,9	[0.55] 14,0	[1.00] 25,4	[10.89] 276,7	[11.25] 285,7	[7.50] 190.50

Model	A3	A5	B2	B3
5905-B	[1.51] 38,4	[2.49] 63,2	[0.59] 15,0	[1.02] 25,9
5910-B	[2.25] 57,2	[3.76] 95,5	[0.75] 19,1	[1.57] 39,9
5915-B	[2.99] 76	[4.92] 125	[0.98] 25	[1.97] 50

5105, 5110 SERIES

Heavy-Duty Vertical Hold Down Clamps | Product Overview



Features:

- High strength forged clamping arm for heavy-duty service
- Hardened steel pivot pins and bushings provide long life
- Black oxide finish
- Large clearance under the clamping bar
- DESTACO® Toggle Lock Plus™ versions available†

Applications:

- Welding fixtures
- Assembly fixtures

Covered under one or more U.S./International Patents

5105/5110
Flanged Base



5105-**B**/5110-**B**
Soild
Base



5105-**R**/5110-**R**
Flanged Base
DESTACO®
Toggle Lock
Plus™



5105-**BR**ⓘ/5110-**BR**ⓘ
Solid Base
DESTACO®
Toggle Lock
Plus™



Technical Information

Model	Max. Holding Capacity	Clamp Bar Opening (+10°)	Handle Opening (+10°)	Weight
5105	[700 lbf] 3100N	89°	159°	[1.12 lbs] 0,51 kg
5105-B				[1.06 lbs] 0,48 kg
5105-R				[1.10 lbs] 0,50 kg
5105-BRⓘ				[1.17 lbs] 0,53 kg
5110	[1150 lbf] 5100N	74°	138°	[2.98 lbs] 1,35 kg
5110-B				[2.95 lbs] 1,34 kg
5110-R				[3.00 lbs] 1,36 kg
5110-BRⓘ				[3.02 lbs] 1,37 kg

ⓘ This item is available upon request.
†Toggle Lock Plus™ locks the handle in the closed position only.

Holding Forces

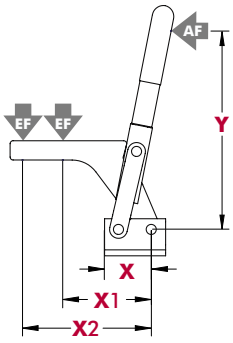

Model	X	X1	X2	Y	‡HC1	‡HC2	‡EF(X1):AF	‡EF(X2):AF
5105	[1.24] 31,5	[2.28] 58	[3.38] 86	[5.31] 135	[700 lbf] 3100 N	[475 lbf] 2100 N	14:1	10:1
5110	[1.85] 47	[3.23] 82	[5.24] 133	[6.69] 170	[1150 lbf] 5100 N	[700 lbf] 3100 N	15:1	10:1

Dimensions shown "mm [inch]" ‡ **HC** = Holding Capacity, **EF** = Exerting Force, **AF** = Applied Force
See page MC-TEC-4 for additional information.

5105, 5110 SERIES

Heavy-Duty Vertical Hold Down Clamps | Dimensions



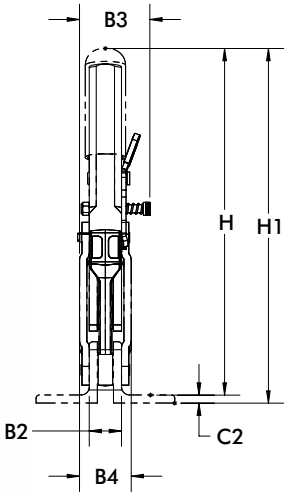

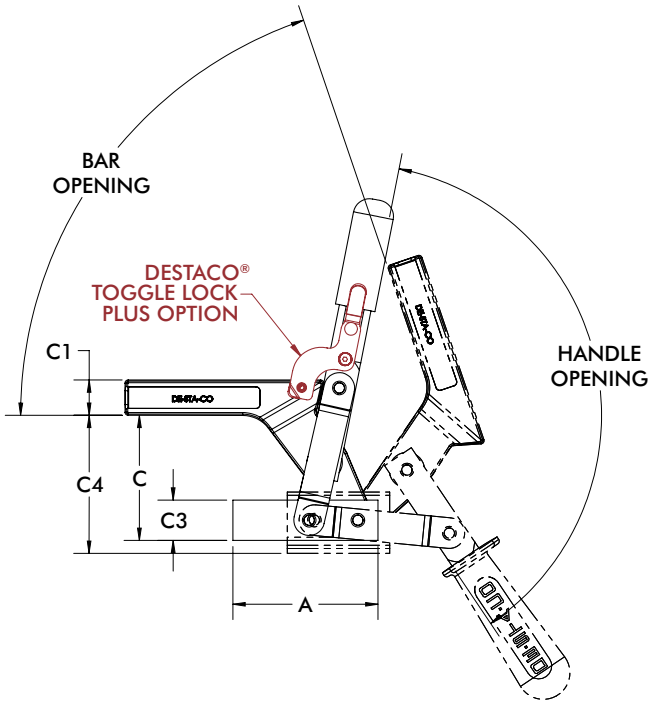

mm [INCH]

THIRD ANGLE
PROJECTION

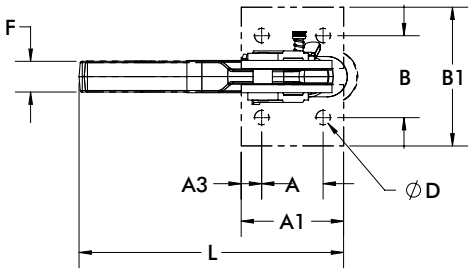

Model	A	A1	A2	B	B1	B2	B3	B4	C1	C2	C4	D	F	H1	L
5105	[1.00] 25,4	[1.62] 41,2	[0.31] 7,9	[1.46] 37	[2.24] 57	[0.59] 15	--	[0.98] 25	[0.51] 13,0	[0.16] 4,0	[2.54] 64,6	[0.26] 6,6	[0.56] 14,3	[6.54] 166,1	[4.13] 104,9
5105-R							[1.48] 37,5								
5110	[1.50] 38,1	[2.50] 63,5	[0.50] 12,7	[2.00] 50,8	[2.76] 70	[0.79] 20	--	[1.26] 32	[0.87] 22,0	[0.20] 5,0	[3.37] 85,6	[0.35] 9,0	[0.75] 19,1	[8.70] 221,1	[6.33] 160,9
5110-R							[1.67] 42,5								

Model	A3	B2	B3	B4	C	C1	C3	F	H
5105-B	[2.50] 63,5	[0.59] 15	--	[0.98] 25	[2.14] 54,3	[0.51] 13,0	[0.59] 15,0	[0.56] 14,3	[6.14] 156,0
5105-BR ⓘ			[1.48] 37,5						
5110-B	[3.54] 90	[0.79] 20	--	[1.26] 32	[3.05] 77,5	[0.87] 22,0	[0.98] 25,0	[0.75] 19,1	[8.39] 213,0
5110-BR ⓘ			[1.67] 42,5						

ⓘ This item is available upon request

528 SERIES

Heavy-Duty Vertical Hold Down Clamps | Product Overview

Features:
- Hardened steel bushings at pivot points for long life
- Solid bar may be modified to suit application requirements

Applications:
- Assembly & test
- Light machining
- Welding
- Medium to heavy duty clamping requirements

528
Flanged Base
Solid Bar



528-F ⓘ
Front Mount
Base Solid Bar



Technical Information

Model	Max. Holding Capacity	Clamp Bar Opening (+10°)	Handle Opening (+10°)	Weight
528 528-F ⓘ	[1000 lbf] 4450 N	180°	177°	[2.50 lbs] 1,13 kg

ⓘ This item is available upon request

Holding Capacities | Dimensions

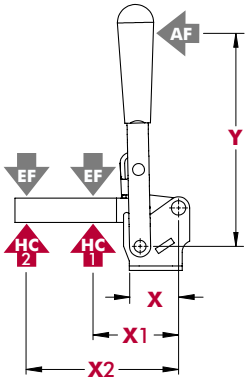

Model	X	X1	X2	Y	‡HC1	‡HC2	‡EF(X1):AF	‡EF(X2):AF
528 528-F	[1.38] 35	[3.50] 89	[6.00] 152	[5.50] 140	[1000 lbf] 4450 N	[580 lbf] 2580 N	23:1	12:1

Dimensions shown "mm [inch]" ‡ **HC** = Holding Capacity, **EF** = Exerting Force, **AF** = Applied Force
See page MC-TEC-4 for additional information.

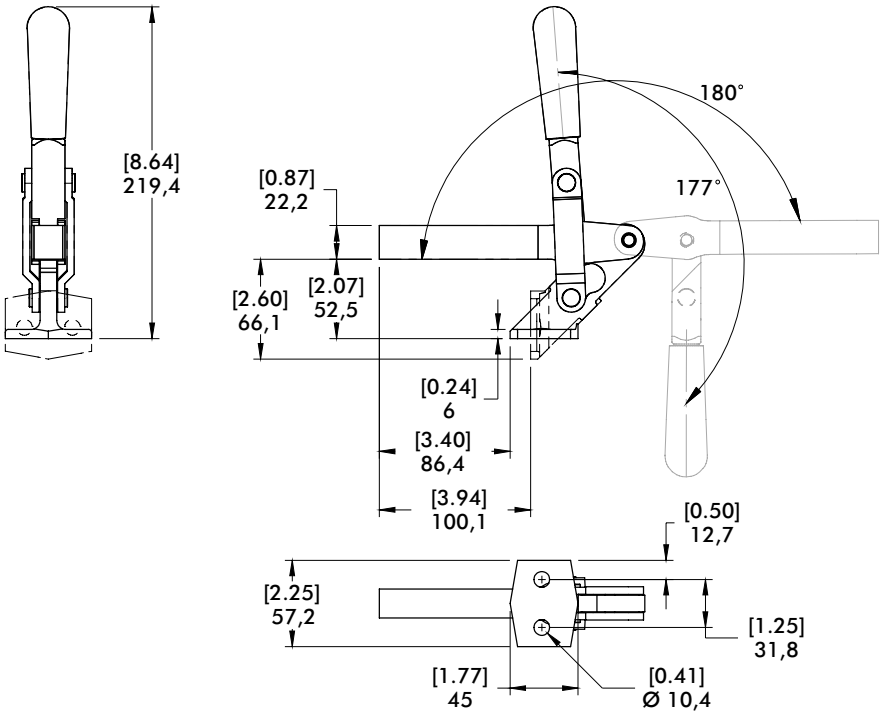

mm [INCH]
THIRD ANGLE PROJECTION

Dimensions and technical information are subject to change without notice

548, 578 SERIES

Heavy-Duty Vertical Hold Down Clamps | Product Overview

Features:
- Large bar guides for lateral stability
- Hardened steel pins and bushings for long life
- Replaceable pins

Applications:
- Assembly & test
- Light machining
- Welding
- Heavy duty clamping requirements

548
Straight Base
Solid Bar



578
Straight Base
Solid Bar



Technical Information

Model	Max. Holding Capacity	Clamp Bar Opening (+10°)	Handle Opening (+10°)	Weight
548	11100 N [2500 lbf]	199°	129°	2,40 kg [5.30 lbs]
578	17800 N [4000 lbf]			4,14 kg [9.12 lbs]

Holding Capacities | Dimensions

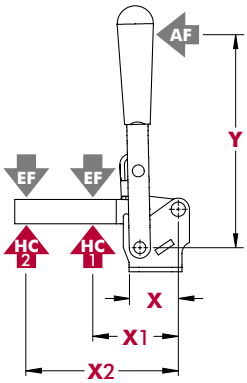

Model	X	X1	X2	Y	‡HC1	‡HC2	‡EF(X1):AF	‡EF(X2):AF
548	[2.75] 70	[3.50] 89	[6.00] 152	[7.50] 190	[2500 lbf] 11100 N	[1500 lbf] 6680 N	4.5:1	3.4:1
578	[4.25] 108	[4.50] 114	[7.00] 178	[10.31] 262	[4000 lbf] 17800 N	[2500 lbf] 11100 N	7.6:1	4.2:1

Dimensions shown "mm [inch]" ‡ **HC** = Holding Capacity, **EF** = Exerting Force, **AF** = Applied Force
See page MC-TEC-4 for additional information.

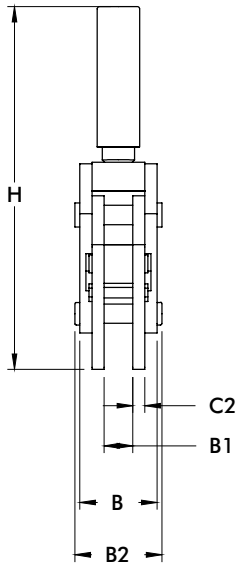

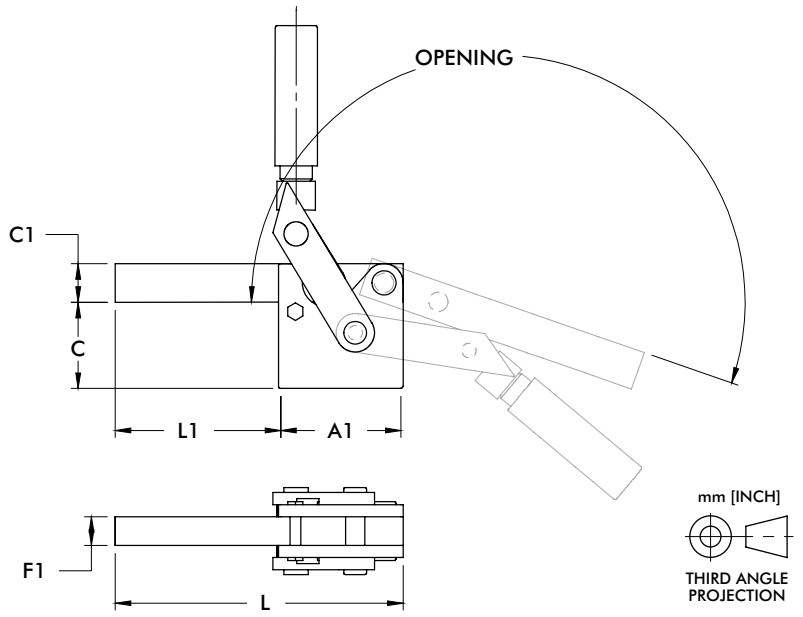

Model	A1	B	B1	B2	C	C1	C2	F1	H	L	L1
548	[3.25] 82,6	[2.01] 51	[0.75] 19,1	[2.26] 57,5	[2.24] 56,9	[1.00] 25,4	[0.31] 7,9	[0.75] 19,1	[9.45] 240	[7.50] 190,5	[4.25] 107,9
578	[4.02] 102,1	[2.38] 60,5	[0.87] 22,1	[2.70] 68,6	[2.79] 70,9	[1.26] 32	[0.37] 9,5	[0.87] 22,1	[11.04] 280,3	[8.62] 219	[4.61] 117,1

533, 535 SERIES

Heavy-Duty Vertical Hold Down Clamps | Product Overview

Features:
- Hardened steel bushings and pivot pins
- Large bar guides for greater lateral support
- Solid clamping bar may be modified to suit application requirements
- DESTACO® Toggle Lock Plus™ (533-LBR)
- 5 handle colors - see page MC-PRO-7 for details

Applications:
- Welding
- Heavy duty clamping applications

Also Available:
See page MC-ACC-1 for accessories

533-**L**
Flanged Base
Solid Bar



533-**LB**
Straight Base
Solid Bar



533-**LBR**
Straight Base
Solid Bar
DESTACO®
Toggle Lock
Plus™



Color Handles
Available on models in this series that use standard red handles.* Add **-Y**, **-G**, **-B**, **-K** to end of model number.

*Excludes Blackout Series, Toggle Lock Plus levers or dipped handles.



535-**L**
Flanged Base
Solid Bar

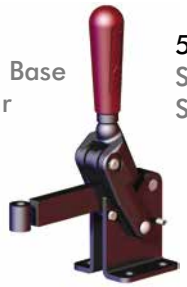

535-**LB**
Straight Base
Solid Bar



Technical Information

Model	Max. Holding Capacity	Clamp Bar Opening (+10°)	Handle Opening (+10°)	Weight	Accessories (Supplied) Bolt Retainer
533-L	[1575 lbf] 7000 N	120°	90°	[2.20 lbs] 1,00 kg	533108-M
533-LB					
533-LBR		90°	74°	1,26 kg [2.78 lbs]	
535-L	[2250 lbf] 10000 N	120°	90°	[4.087 lbs] 1,85 kg	535108-M
535-LB					

Holding Forces

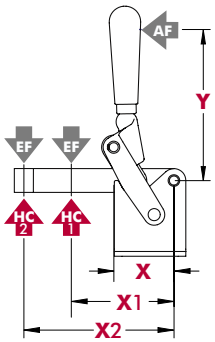

Model	X	X1	X2	Y	‡HC1	‡HC2	‡EF(X1):AF	‡EF(X2):AF
533-L	[1.97] 50	[3.25] 82.5	[4.82] 122.5	[5.51] 140	[1575 lbf] 7000 N	[700 lbf] 3100 N	9:1	5:1
535-L	[2.46] 62.5	[4.23] 107.5	[6.20] 157.5	[6.22] 158	[2250 lbf] 10000 N	[1500 lbf] 6600 N	8:1	6:1

Dimensions shown "mm [inch]" ‡ **HC** = Holding Capacity, **EF** = Exerting Force, **AF** = Applied Force
See page MC-TEC-4 for additional information.

Dimensions and technical information are subject to change without notice

533-**L**
Flanged Base
Solid Bar



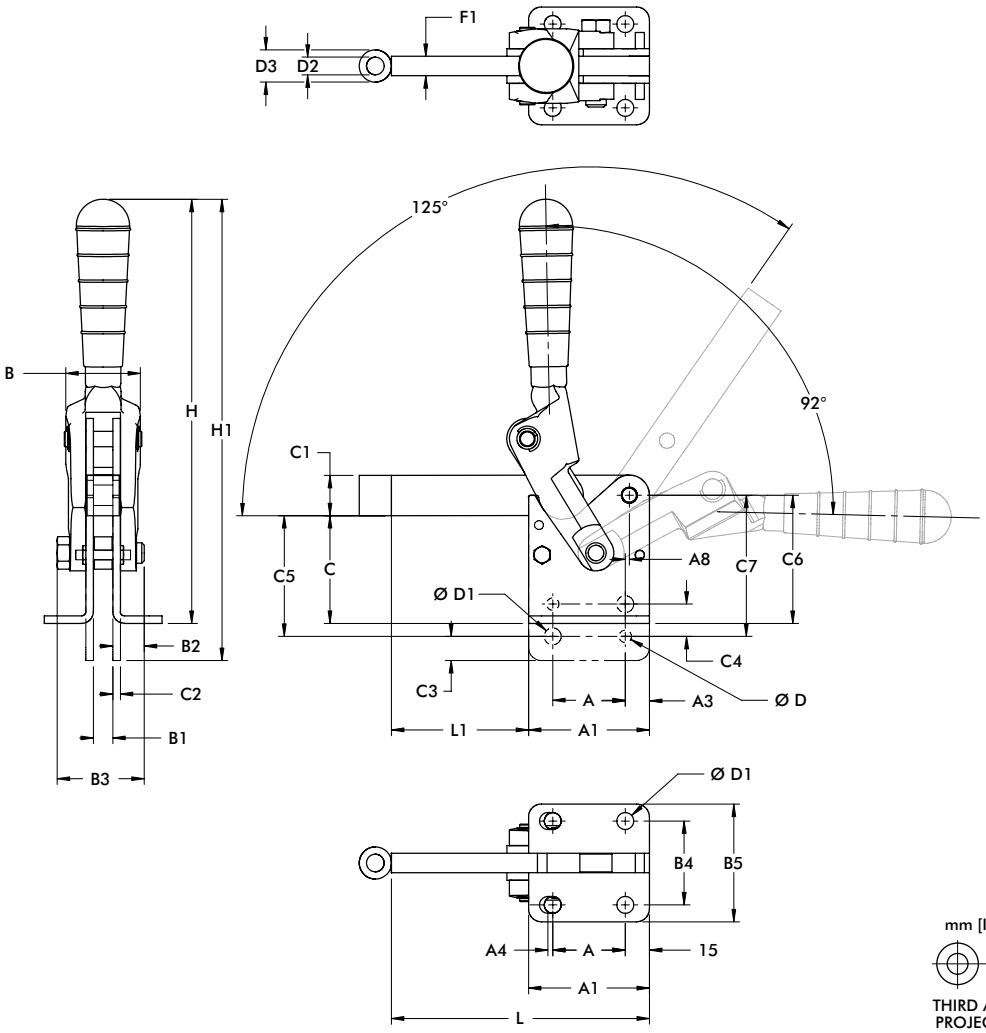

535-**L**
Flanged Base
Solid Bar



mm [INCH]

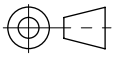

THIRD ANGLE
PROJECTION

Model	A	A1	A3	A4	A8	B	B1	B2	B3	B4	B5	C	C1	C2
533-L	[1.18] 30	[2.36] 59,9	[0.59] 15	[0.08] 2	[0.20] 5,1	[1.52] 38,6	[0.39] 9,9	[0.69] 15,5	[1.75] 44,5	[1.77] 45	[2.44] 62	[1.86] 47,2	[0.79] 20,1	[0.19] 4,8
533-LB				--						--	--	--		
535-L	[1.77] 45	[2.95] 74,9			[0.18] 4,6	[1.89] 48	[0.47] 11,9	[0.89] 22,6	[2.13] 54,1	[2.05] 52,1	[2.87] 72,9	[2.63] 66,8	[0.98] 24,9	
535-LB										--	--	--		

Model	C3	C4	C5	C6	C7	D	D1	D2	D3	F1	H	H1	L	L1
533-L	--	--	--	[2.24] 56,9	--	--	[0.33] 8,4	[0.35] 8,9	[0.59] 15	[0.39] 9,9	[8.6] 218,4	--	[4.92] 125	[2.56] 65
533-LB	[0.39] 9,9	[0.59] 15	[1.86] 55,1	--	[2.56] 65	[0.22] 5,6					--	[9.31] 236,5		
535-L	--	--	--	[3.13] 79,5	--	--	[0.41] 10,4	[0.43] 10,9	[0.79] 20,1	[0.47] 11,9	[10.35] 262,9	--	[6.30] 160	[3.35] 85,1
535-LB	[0.59] 15	[0.79] 20,1	[2.95] 74,9	--	[3.44] 87,4	[0.30] 7,6					--	[11.26] 286		

533, 535 SERIES

Heavy-Duty Vertical Hold Down Clamps | Dimensions

533-**LBR**
Straight Base
Solid Bar
DESTACO®
Toggle Lock
Plus™



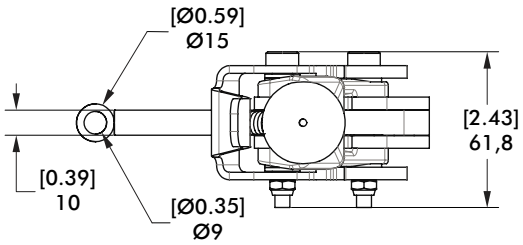

DESTACO®
TOGGLE LOCK
PLUS OPTION

Secured in open
and closed position
against unintentional
opening up to 40 Nm.

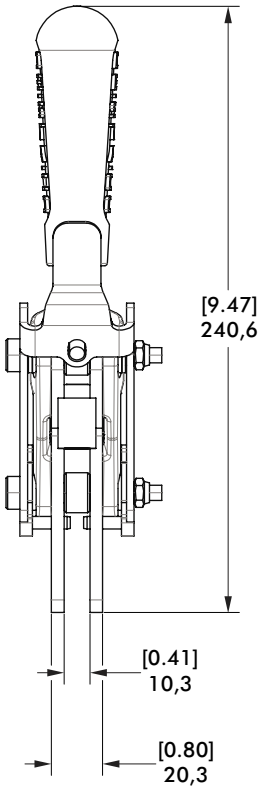

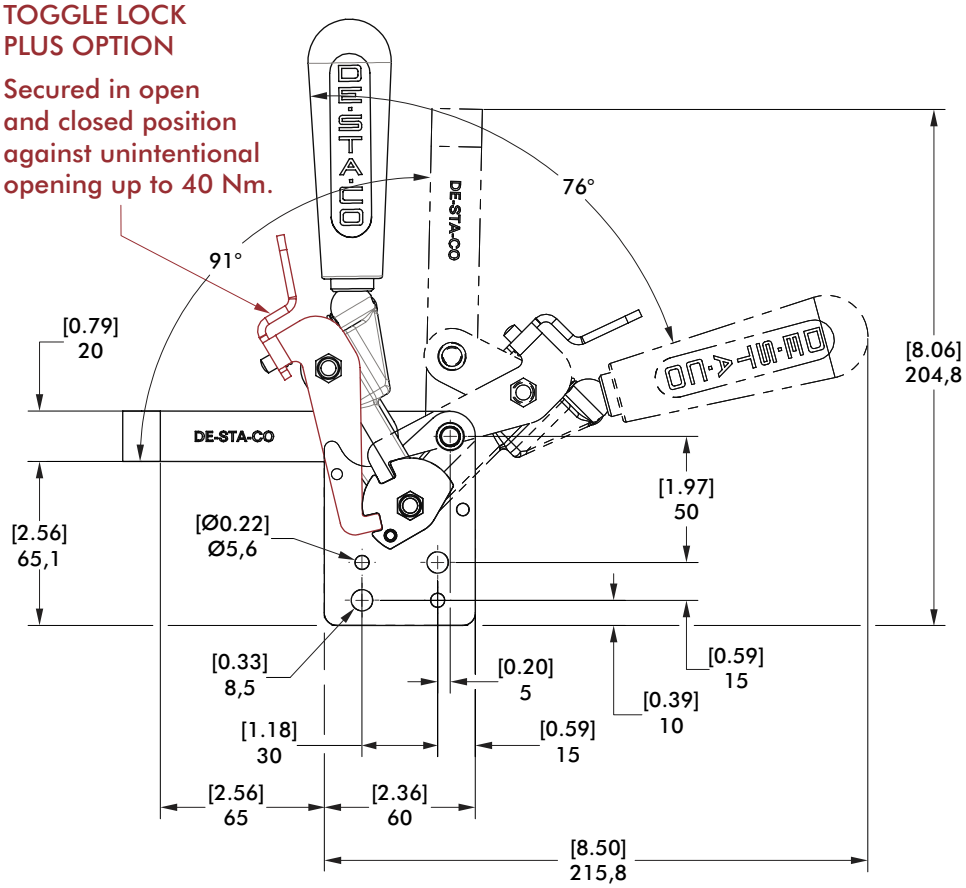

Dimensions and technical information are subject to change without notice

91090 SERIES

Heavy-Duty Vertical Hold Down Clamps | Product Overview

Features:
- Front flange mount
- Accepts M8 or 5/16" spindle accessory (not supplied)
- 5 handle colors - see page MC-PRO-7 for details

Applications:
- Assembly & test
- Checking fixtures
- Light machining
- Woodworking

Also Available:
See page MC-ACC-1 for accessories

91090
Front Flanged Base
Open Bar



Color Handles
Available on models in this series that use standard red handles.* Add **-Y**, **-G**, **-B**, **-K** to end of model number.

*Excludes Blackout Series, Toggle Lock Plus levers or dipped handles.



Technical Information | Dimensions

Model	Max. Holding Capacity	Clamp Bar Opening (+10°)	Handle Opening (+10°)	Weight	Recommended Accessories: Bolt Retainer	Recommended Accessories: Spindle Assembly	Recommended Accessories: Flanged Washers
91090	1710 N [385 lbf]	100°	60°	0,37 kg [0.81 lbs]	---	507208-M	507107

Holding Forces

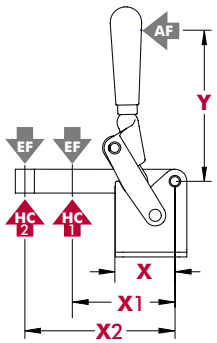

Model	X	X1	X2	Y	‡HC1	‡HC2	‡EF(X1):AF	‡EF(X2):AF
91090	[1.39] 35,3	[2.36] 60	[3.74] 95	[4.13] 105	[385 lbf] 1710 N	[240 lbf] 1065 N	8:1	5:1

Dimensions shown "mm [inch]" ‡ **HC** = Holding Capacity, **EF** = Exerting Force, **AF** = Applied Force
See page MC-TEC-4 for additional information.

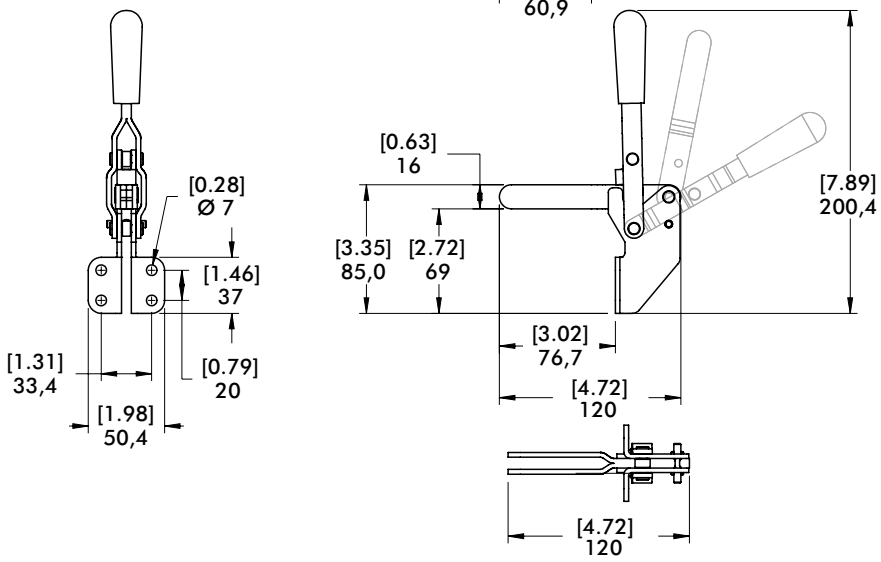

mm [INCH]
THIRD ANGLE PROJECTION

317 SERIES

Vertical Hold Down Clamps | Product Overview

Features:
- Dual mounting surfaces
- Large bar opening angle
- Accommodates M8 or 5/16" spindle accessories
- 5 handle colors - see page MC-PRO-7 for details

Applications:
- Assembly & test
- Checking fixtures
- Light machining
- Woodworking

Also Available:
See page MC-ACC-1 for accessories
817-U Pneumatic Toggle Clamp
(See page MC-PTC-19)
817-S Pneumatic Toggle Clamp
(See page MC-PTC-19)

317-**U**
U-Bar



317-**S**
Solid Bar



Color Handles
Available on models in this series that use standard red handles.* Add **-Y**, **-G**, **-B**, **-K** to end of model number.

*Excludes Blackout Series, Toggle Lock Plus levers or dipped handles.



Technical Information

Model	Max. Holding Capacity	Clamp Bar Opening (+10°)	Handle Opening (+10°)	Weight	Accessories (Supplied)		
					Bolt Retainer	Spindle Assembly	Flanged Washers
317-U	1670 N [375 lbf]	185°	60°	[0.75 lbs] 0,34 kg	---	507208-M	507107
317-S	1780 N [400 lbf]				207105	---	---

Holding Capacities

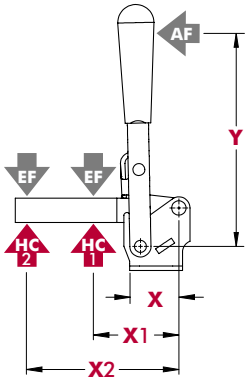

Model	X	X1	X2	Y	‡HC1	‡HC2	‡EF(X1):AF	‡EF(X2):AF
317-U	[1.57] 40,0	[2.00] 50,8	[3.75] 95,3	[4.00] 101,6	[375 lbf] 1670 N	[200 lbf] 900 N	17:1	8:1
317-S		[2.50] 63,5	[5.00] 127,0		[400 lbf] 1780 N	[190 lbf] 850 N	13:1	5:1

Dimensions shown "mm [inch]" ‡ **HC** = Holding Capacity, **EF** = Exerting Force, **AF** = Applied Force
See page MC-TEC-4 for additional information.

317-**U**
U-Bar



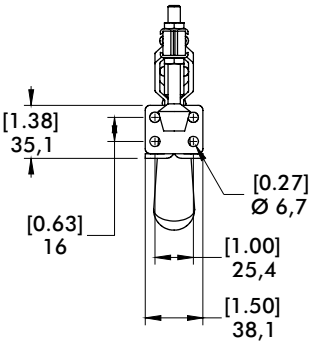

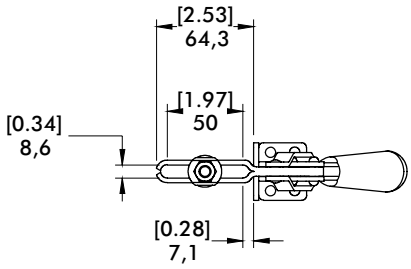

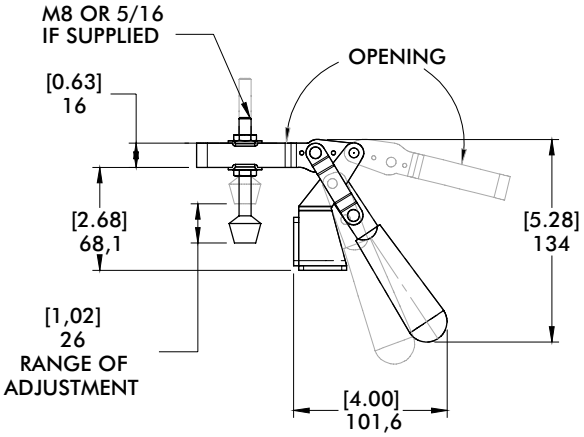

317-**S**
Solid Bar



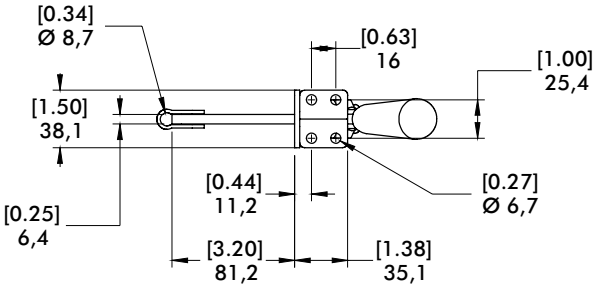

mm [INCH]
THIRD ANGLE
PROJECTION

527 SERIES

Vertical Hold Down Clamps | Product Overview

Features:
- Hardened steel bushings at pivot points
- Solid bar can be modified to suit application requirements
- Thumb lever on link for easy opening

Applications:
- Assembly & test
- Light machining
- Woodworking

527
Flanged Base



527-F ⓘ
Front Mount



Technical Information

Model	Max. Holding Capacity	Clamp Bar Opening (+10°)	Handle Opening (+10°)	Weight
527 527-F ⓘ	[1000 lbf] 4450 N	195°	65°	[2.50 lbs] 1,13 kg

ⓘ This item is available upon request

Holding Capacities | Dimensions

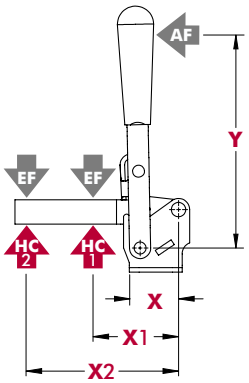

Model	X	X1	X2	Y	‡HC1	‡HC2	‡EF(X1):AF	‡EF(X2):AF
527	[3.12] 79,2	[3.50] 89,0	[6.00] 152,4	[4.00] 101,6	[1000 lbf] 4450 N	[580 lbf] 2580 N	23:1	12:1
527-F	[2.53] 64,3							

Dimensions shown "mm [inch]" ‡ **HC** = Holding Capacity, **EF** = Exerting Force, **AF** = Applied Force
See page MC-TEC-4 for additional information.

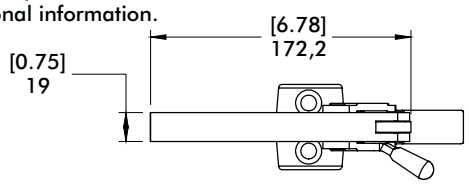

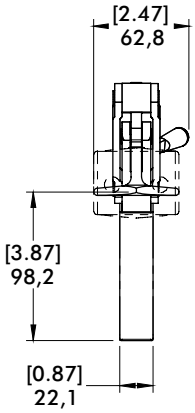

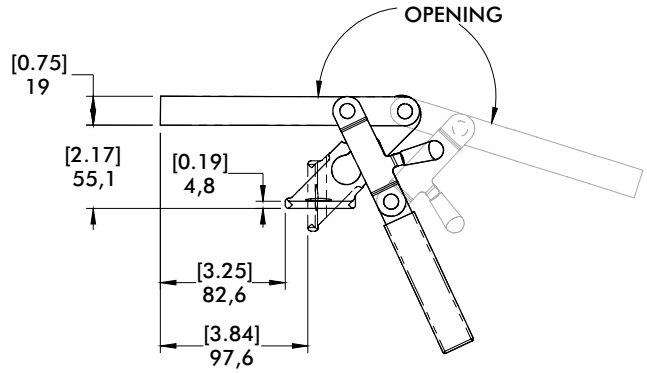

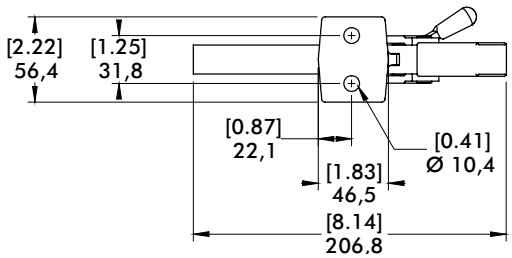

mm [INCH]
THIRD ANGLE PROJECTION

Dimensions and technical information are subject to change without notice

7-101, 7-58, 7-59, 7-60 SERIES

Heavy Duty Cam Action Series | Product Overview

Features:

- Cam action accommodates variable workpiece thickness
- Heavy duty construction
- Solid clamp arms may be modified to suit application requirements

Applications:

- Light machining
- Welding
- Assembly

7-101



7-58
7-59
7-60



Technical Information

Model	Max. Holding Capacity	Clamp Bar Opening (+10°)	Weight
7-101	2110 N [475 lbf]	80°	0,45 kg [1.0 lbs]
7-58	2670 N [600 lbf]	95°	0,91 kg [2.0 lbs]
7-59	4450 N [1000 lbf]	95°	1,36 kg [3.0 lbs]
7-60	7120 N [1600 lbf]	80°	2,27 kg [5.0 lbs]

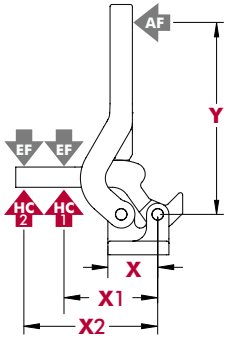

Holding Forces | Dimensions

Model	X	X1	X2	Y	‡HC1	‡HC2	‡EF(X1):AF	‡EF(X2):AF
7-58	[1.38] 35,1	[2.36] 60	[3.54] 90	[5.31] 135	[600 lbf] 2670 N	[400 lbf] 1780 N	5:1	3:1
7-59	[1.69] 42,8	[3.46] 88	[4.72] 120	[6.69] 170	[1000 lbf] 4450 N	[725 lbf] 3225 N	4:1	3:1
7-60	[2.00] 50,8	[4.53] 115	[5.90] 150	[7.48] 190	[1600 lbf] 7120 N	[1225 lbf] 5450 N	4:1	3:1
7-101	[1.00] 25,4	[1.97] 50	[3.74] 95	[3.46] 88	[475 lbf] 2110 N	[250 lbf] 1110 N	1.50:1	1.25:1

Dimensions shown "mm [inch]" ‡ **HC** = Holding Capacity, **EF** = Exerting Force, **AF** = Applied Force
See page MC-TEC-4 for additional information.

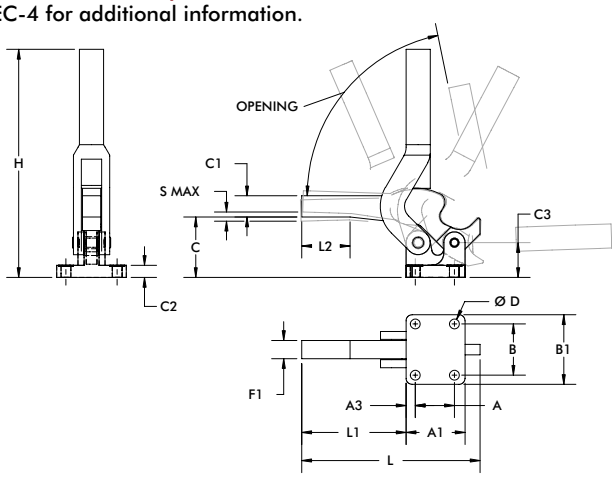

mm [INCH]

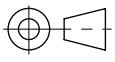

THIRD ANGLE PROJECTION

Model	A	A1	A3	B	B1	C	C1	C2	C3	D	F1	H	L	L1	L2	S max.
7-101	[0.75] 19,1	[1.25] 31,8	[0.25] 6,1	[1.25] 31,8	[1.75] 44,5	[1.44] 36,6	[0.50] 12,7	[0.31] 7,9	[1.00] 25,4	[0.22] 5,6	[0.50] 12,7	[5.00] 127	[4.62] 117,3	[3.12] 79,1	-	[0.13] 3,3
7-58	[1.00] 25,4	[1.69] 42,9	[0.34] 8,6	[1.62] 41,2	[2.25] 57,2	[1.87] 47,5	[0.56] 14,2	[0.38] 9,7	[1.12] 28,5	[0.28] 7,1	[0.50] 12,7	[6.93] 176	[4.62] 117,35	[2.55] 64,8	-	[0.13] 3,3
7-59	[1.38] 35,1	[2.06] 52,3	[0.39] 9,9	[1.88] 47,8	[2.50] 63,5	[2.19] 55,6	[0.63] 16	[0.44] 11,2	[1.25] 31,8	[0.34] 8,6	[0.63] 16	[8.50] 215,9	[6.00] 152,4	[3.45] 87,6	[1.24] 31,5	[0.19] 4,8
7-60	[1.62] 41,2	[2.44] 62	[0.44] 11,2	[2.12] 53,9	[2.88] 73,2	[2.50] 63,5	[0.88] 22,4	[0.50] 12,7	[1.44] 36,6	[0.41] 10,4	[0.75] 19,1	[9.44] 239,8	[7.38] 187,5	[4.32] 109,7	[1.97] 50	[0.25] 6,4

229 SERIES

Vertical Hold Down Clamps | Product Overview

Features:
- Cam action clamp holds workpieces of varying height
- Total clamping range of 8mm [0.31in.]
- Accommodates M12 or ½" accessories
- 5 handle colors - see page MC-PRO-7 for details

Applications:
- Assembly & test
- Light machining
- Welding

Also Available:
See page MC-ACC-1 for accessories

229
Flanged Base
Open Bar



Color Handles
Available on models in this series that use standard red handles.* Add **-Y**, **-G**, **-B**, **-K** to end of model number.

*Excludes Blackout Series, Toggle Lock Plus levers or dipped handles.



Technical Information

Model	Max. Holding Capacity	Clamp Bar Opening (+10°)	Handle Opening (+10°)	Weight	Accessories (Supplied)	
					Spindle Assembly	Flanged Washers
229	4450 N [1000 lbf]	115°	180°	1,17 kg [2.59 lbs]	229203	247109

Holding Capacities

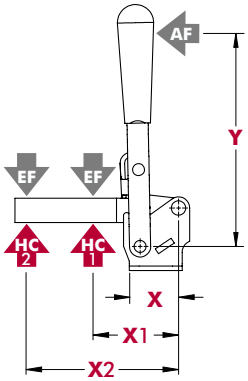

Model	X	X1	X2	Y	‡HC1	‡HC2	‡EF(X1):AF	‡EF(X2):AF
229	[1.53] 38,9	[3.00] 76,2	[6.12] 155,4	[7.06] 179,3	[1000 lbf] 4450 N	[500 lbf] 2230 N	7:1	3:1

Dimensions shown "mm [inch]" ‡ **HC** = Holding Capacity, **EF** = Exerting Force, **AF** = Applied Force
See page MC-TEC-4 for additional information.

Dimensions and technical information are subject to change without notice

229
Flanged Base
Open Bar



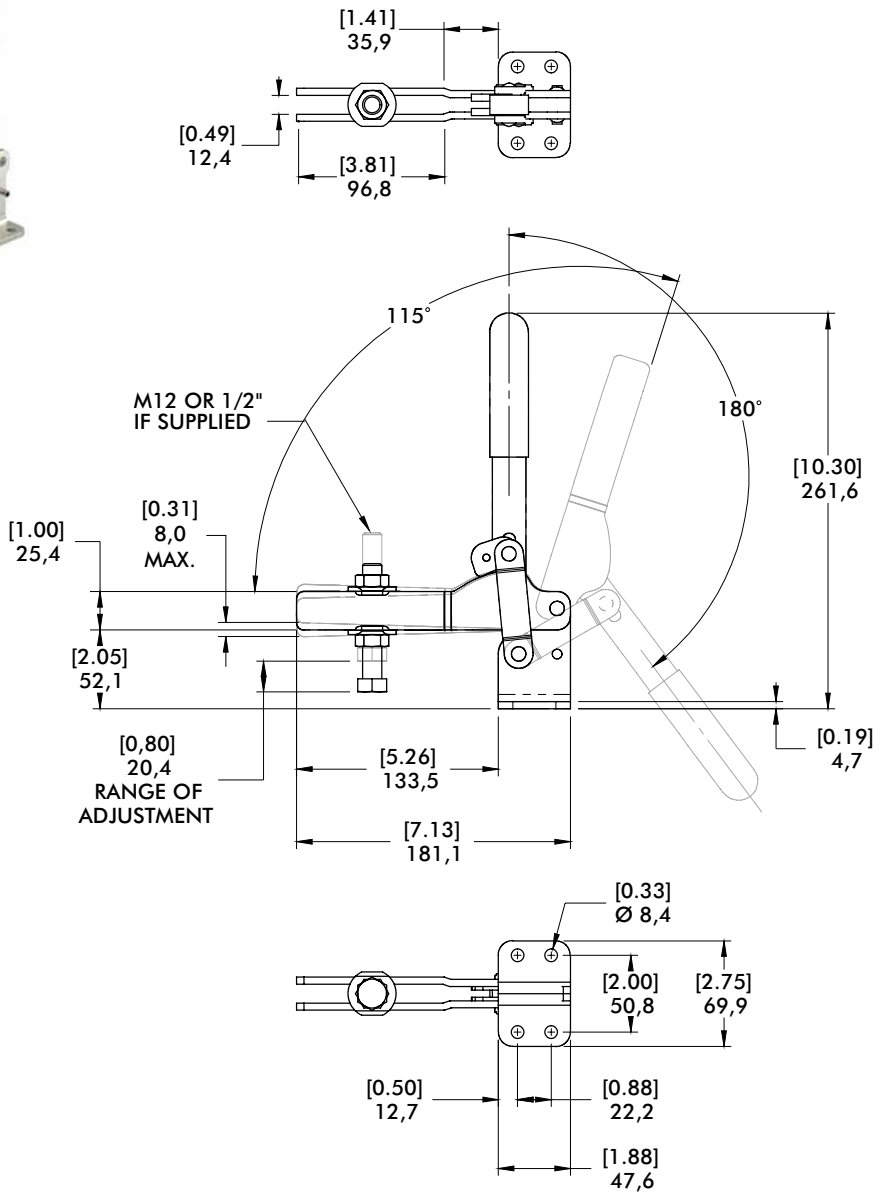

mm [INCH]

THIRD ANGLE
PROJECTION

500 SERIES

Weldable Vertical Hold Down Clamps | Product Overview

Features:
- Hardened pivot pins and bushings
- Weldable clamping bar
- LSC version with locking spring clip for securing the handle in the open position
- DESTACO® Toggle Lock Plus™ (503-MLBR)
- Modular design allows you to set up the clamp to meet application requirements
- 5 handle colors (503-MLBR only) - see page MC-PRO-7 for details

Applications:
- Welding
- Assembly
- Heavy duty, production clamping applications

Also Available:
See page MC-VHD-47 for accessories

503-**MB**
Swivel Base



503-**MLB**
Long Base



503-**MLBR**
Long Base,
DESTACO® Toggle Lock Plus™



503-**MBLSC**ⓘ
Swivel Base with Locking Spring Clip



503-**MLBLSC**ⓘ
Long Base with Locking Spring Clip



505-**MB**
Swivel Base



505-**MLB**
Long Base



505-**MBLSC**ⓘ
Swivel Base with Locking Spring Clip



505-**MLBLSC**ⓘ
Long Base with Locking Spring Clip



506-**MB**
Swivel Base



506-**MLB**ⓘ
Long Base



506-**MBLSC**ⓘ
Swivel Base with Locking Spring Clip



506-**MLBLSC**ⓘ
Long Base with Locking Spring Clip



Model 505-MLB in a robotic welding fixture

ⓘ This item is available upon request

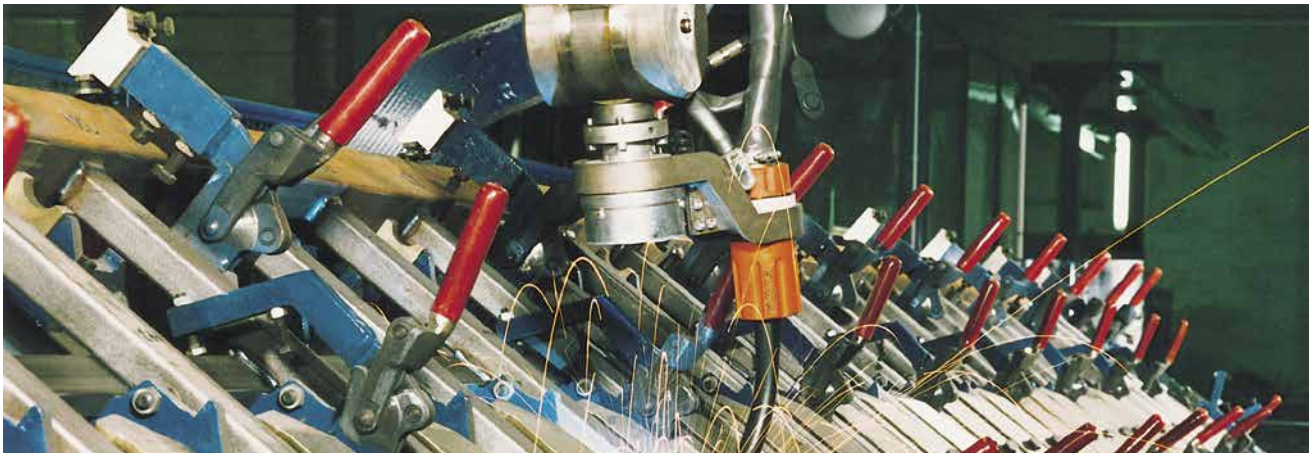

Dimensions and technical information are subject to change without notice

Model	Max. Holding Capacity	Clamp Bar Opening (+10°)	Weight
503-MB	[1575 lbf] 7000 N	200°	0,70 kg [1.54 lbs]
503-MLB			0,80 kg [1.76 lbs]
503-MLBR		90°	1,26 kg [2.78 lbs]
503-MBLSC ⓘ		200°	0,80 kg [1.76 lbs]
503-MLBLSC ⓘ			0,90 kg [1.98 lbs]
505-MB	[2475 lbf] 11000 N		1,40 kg [3.09 lbs]
505-MLB			1,50 kg [3.31 lbs]
505-MBLSC ⓘ			
505-MLBLSC ⓘ			1,60 kg [3.53 lbs]
506-MB	[5060 lbf] 22500 N		2,60 kg [5.73 lbs]
506-MLB ⓘ			2,80 kg [6.17 lbs]
506-MBLSC ⓘ			
506-MLBLSC ⓘ			3,00 kg [6.61 lbs]

ⓘ This item is available upon request

Note:
The clamping bars are made from forged alloy steel and must be heated to 200°C (400°F) prior to welding. We recommend welding the handles, clamp arms, and mounting bases when disassembled. Welding of non pre-heated parts may only be done with the addition of welding fillers.

Clamping Position

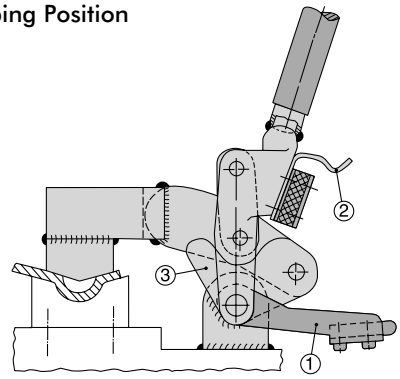

Open Position

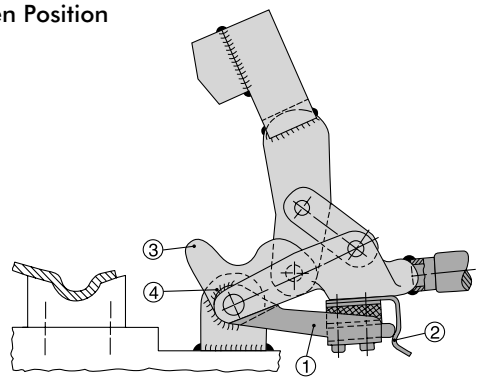

Patented spring latch hold-open device
1. Mount the clamp and place it in the closed position
2. Position the bracket in the leaf spring
3. Swivel the clamp into the open position
4. In this position, weld the bracket with the bar guide feature at point

500 SERIES

Weldable Vertical Hold Down Clamps | Dimensions | -MB/-MLB/-MBLSC/-MLBLSC

Swivel Base

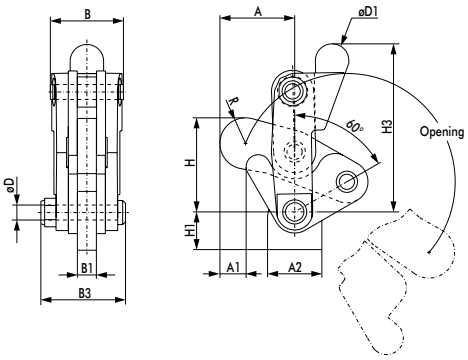

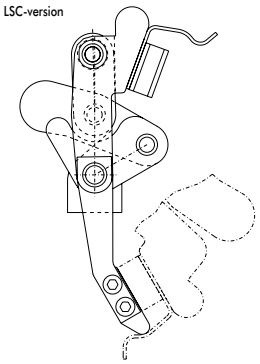

503-**MB**
Swivel Base



Long Base

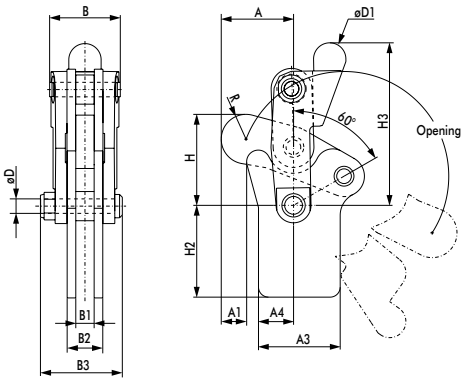

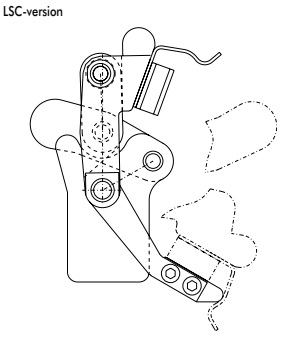

503-**MLB**
Long Base



mm [INCH]

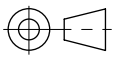

THIRD ANGLE PROJECTION

Swivel Base Dimensions

Model	A	A1	A2	B	B1	B3	ØD	ØD1	H	H1	H3	R
503-MB	[1.54] 39,2	[0.50] 12,8	[1.12] 28,5	[1.52] 38,5	[0.39] 10	[1.82] 46,2	[0.31] 8	[0.69] 17,5	[1.96] 49,8	[0.79] 20	[3.51] 89,1	[0.53] 13,5
503-MBLSC ⓘ												
505-MB	[2.22] 56,5	[1.02] 25,9	[1.38] 35	[1.89] 48	[0.48] 12,3	[2.31] 58,6	[0.37] 9,5	[0.87] 22,2	[2.79] 70,8	[1.10] 28	[4.33] 110,1	[0.72] 18,3
505-MBLSC ⓘ												
506-MB	[2.82] 71,7	[1.27] 32,3	[1.97] 50	[1.91] 48,4	[0.63] 16	[2.72] 69	[0.47] 12	[0.94] 24	[3.45] 87,7	[1.29] 32,8	[5.30] 134,6	[0.84] 21,4
506-MBLSC ⓘ												

Long Base Dimensions

Model	A	A1	A3	A4	B	B1	B2	B3	ØD	ØD1	H	H2	H3	R
503-MLB	[1.54] 39,2		[1.75] 44,5	[0.75] 19	[1.52] 38,5	[0.39] 10	[0.79] 20	[1.82] 46,2	[0.31] 8	[0.69] 17,5	[1.96] 49,8	[1.97] 50	[3.51] 89,1	[0.53] 13,5
503-MLBLSC ⓘ														
505-MLB	[2.22] 56,5	[1.02] 25,9	[2.09] 53	[1.08] 27,5	[1.89] 48	[0.48] 12,3	[0.88] 22,3	[2.31] 58,6	[0.37] 9,5	[0.87] 22,2	[2.79] 70,8	[2.50] 63,5	[4.33] 110,1	[0.72] 18,3
505-MLBLSC ⓘ														
506-MLB	[2.82] 71,7	[1.27] 32,3	[2.58] 65,5	[1.45] 36,9	[1.91] 48,4	[0.63] 16	[1.10] 28	[2.72] 69	[0.47] 12	[0.94] 24	[3.45] 87,7	[3.00] 76,2	[5.30] 134,6	[0.84] 21,4
506-MLBLSC ⓘ														[8.43] 214

Dimensions and technical information are subject to change without notice

Long Base with DESTACO® Toggle Lock Plus

DESTACO®
TOGGLE LOCK
PLUS OPTION

Secured in open and closed position against unintentional opening up to 40 Nm.

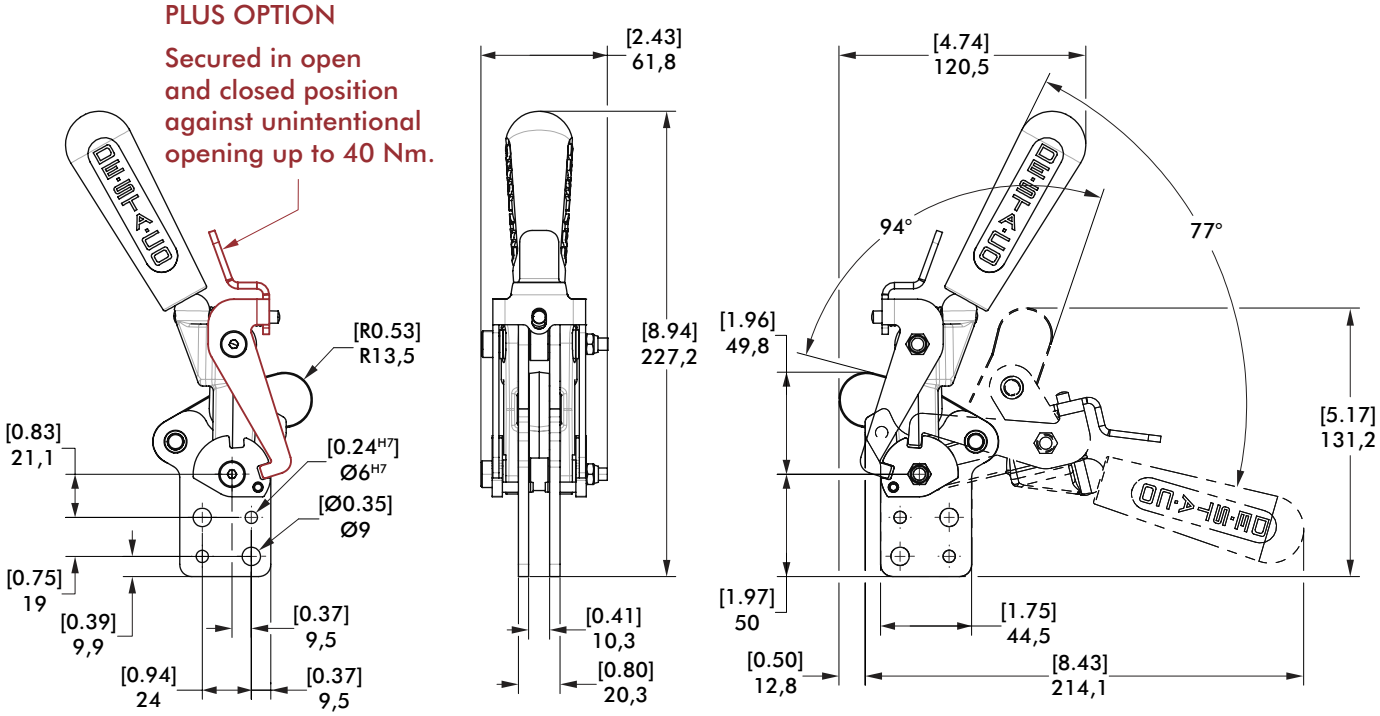

503-**MLBR**
Long Base,
DESTACO®
Toggle Lock
Plus™



Color Handles
Available on this model.
Add **-Y**, **-G**, **-B**, **-K** to
end of model number.



500 SERIES

Weldable Vertical Hold Down Clamps | Accessories

Features:
- Used with 500 Series Vertical Clamps
- Allows you to customize the clamp to suit application requirements

Applications:
- Welding
- Assembly
- Heavy duty, production clamping applications

Also Available:
See page MC-VHD-43 for clamp linkage

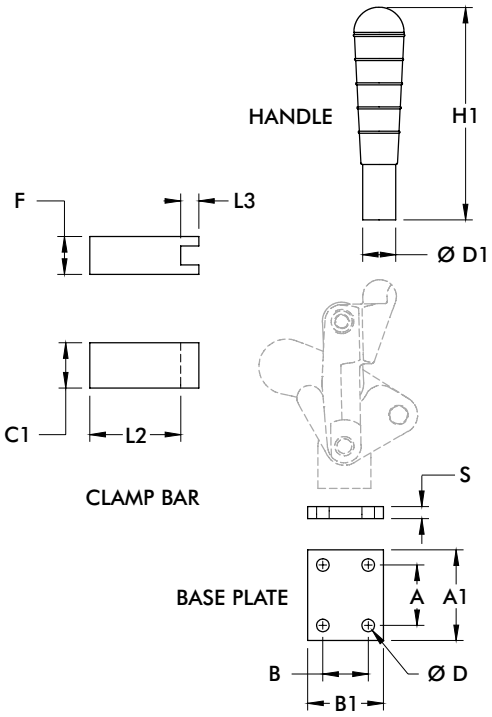

mm [INCH]

THIRD ANGLE PROJECTION





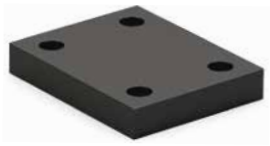

Use with	Part No.	Handle*		Clamping Bar				Base Plate					
		ØD1	H1	C1	F	L2	L3	A	A1	B	B1	ØD	S
503	503503-L	Ø18	129.5	-	-	-	-	-	-	-	-	-	-
	503501	-	-	25	20	50	8	-	-	-	-	-	-
	503502	-	-	-	-	-	-	25	40	35	50	6.3	8
505	505503-L	Ø22	159	-	-	-	-	-	-	-	-	-	-
	505501	-	-	30	25	60	12	-	-	-	-	-	-
	505502	-	-	-	-	-	-	40	60	30	50	8.1	8
506	506503-L	Ø28	188	-	-	-	-	-	-	-	-	-	-
	506501	-	-	35	30	75	15	-	-	-	-	-	-
	506502	-	-	-	-	-	-	50	70	45	65	8.1	8

*Handle comes standard on 503-MLBR. Note: Dimensions shown in millimeters.

Dimensions and technical information are subject to change without notice

Notes

2013 SERIES

Horizontal Hold Down Clamps | Product Overview

Features:
- Increased handle clearance reduces pinch points
- Common mounting hole pattern to Model 213
- Fixed handle pivot provides smooth action
- Nearly 2 times the holding capacity Model 213
- BLK models feature a black, non-reflective finish
- 5 handle colors - see page MC-PRO-7 for details

Applications:
- Checking fixtures
- Assembly & test
- Light machining
- Woodworking
- Closures

Also Available:
See page MC-ACC-1 for accessories

Accommodates M5 or #10 spindle accessory

Covered under one or more U.S./International Patents

2013-U
Flanged Base
U-Bar



2013-U-LS-BLKⓘ
Blackout Series
Flanged Base
U-Bar



2013-UR
Flanged Base
U-Bar
DESTACO®
Toggle Lock
Plus™



Color Handles
Available on models in this series that use standard red handles.* Add **-Y**, **-G**, **-B**, **-K** to end of model number.

*Excludes Blackout Series, Toggle Lock Plus levers.



ⓘ This item is available upon request

Technical Information

Model	Max. Holding Capacity	Clamp Bar Opening (+10°)	Handle Opening (+10°)	Weight	Accessories (Supplied)	
					Spindle Assembly	Flanged Washers
2013-U	1310 N [295 lbf]	71°	58°	0,17 kg [0.37 lb]	2013208-M	102111
2013-U-LS-BLKⓘ					--	102111-BLK
2013-UR					2013208-M	102111

ⓘ This item is available upon request

Holding Capacities

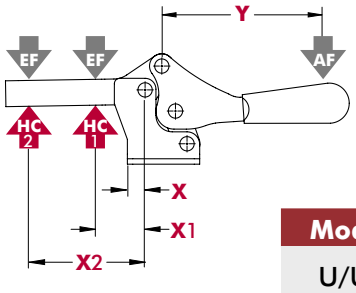

Model	X	X1	X2	Y	‡HC1	‡HC2	‡EF(X1):AF	‡EF(X2):AF
U/UR	[0.63] 16	[0.95] 24	[1.95] 49,5	[2.34] 59,5	[295 lbf] 1310 N	[175 lbf] 780 N	6:1	4:1

Dimensions shown "mm [inch]" ‡ **HC** = Holding Capacity, **EF** = Exerting Force, **AF** = Applied Force
See page MC-TEC-4 for additional information.

2013-U
Flanged Base
U-Bar



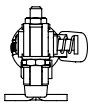

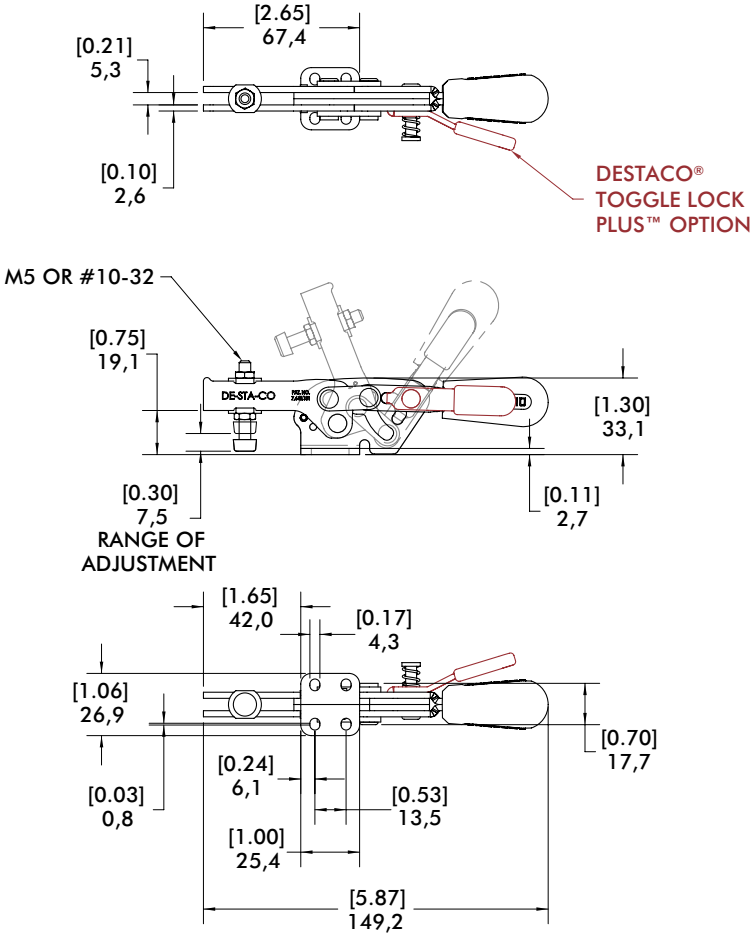

mm [INCH]

THIRD ANGLE
PROJECTION

2017 SERIES

Horizontal Hold Down Clamps | Product Overview

Features:
- Increased handle clearance reduces pinch points
- Common mounting hole pattern to Model 217
- Fixed handle pivot provides smooth action
- Over 2½ times the holding capacity Model 217
- BLK models feature a black, non-reflective finish
- 5 handle colors - see page MC-PRO-7 for details

Applications:
- Checking fixtures
- Assembly & test
- Light machining
- Woodworking
- Closures

Also Available:
See page MC-ACC-1 for accessories

Accommodates M6 or ¼" spindle accessory

Covered under one or more U.S./International Patents

2017-U
Flanged Base
U-Bar



2017-U-LS-BLKⓘ
Blackout Series
Flanged Base
U-Bar



2017-UR
Flanged Base
U-Bar
DESTACO®
Toggle Lock
Plus™



Color Handles
Available on models in this series that use standard red handles.* Add **-Y**, **-G**, **-B**, **-K** to end of model number.

*Excludes Blackout Series, Toggle Lock Plus levers.



ⓘ This item is available upon request

Technical Information

Model	Max. Holding Capacity	Clamp Bar Opening (+10°)	Handle Opening (+10°)	Weight	Accessories (Supplied)	
					Spindle Assembly	Flanged Washers
2017-U	2500 N [560 lbf]	73°	69°	0,44 kg [0.97 lb]	215208-M	215105
2017-U-LS-BLKⓘ					--	215105-BLK
2017-UR					215208-M	215105

ⓘ This item is available upon request

Holding Capacities

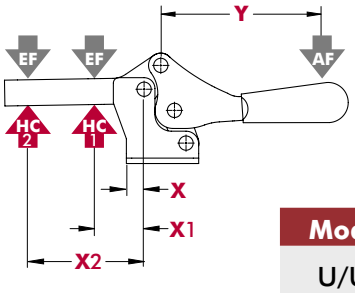

Model	X	X1	X2	Y	‡HC1	‡HC2	‡EF(X1):AF	‡EF(X2):AF
U/UR	[1.08] 27,4	[1.65] 42	[3.15] 80	[2.54] 64,5	[560 lbf] 2500 N	[245 lbf] 1090 N	5:1	2.5:1

Dimensions shown "mm [inch]" ‡ **HC** = Holding Capacity, **EF** = Exerting Force, **AF** = Applied Force
See page MC-TEC-4 for additional information.

2017-U
Flanged Base
U-Bar



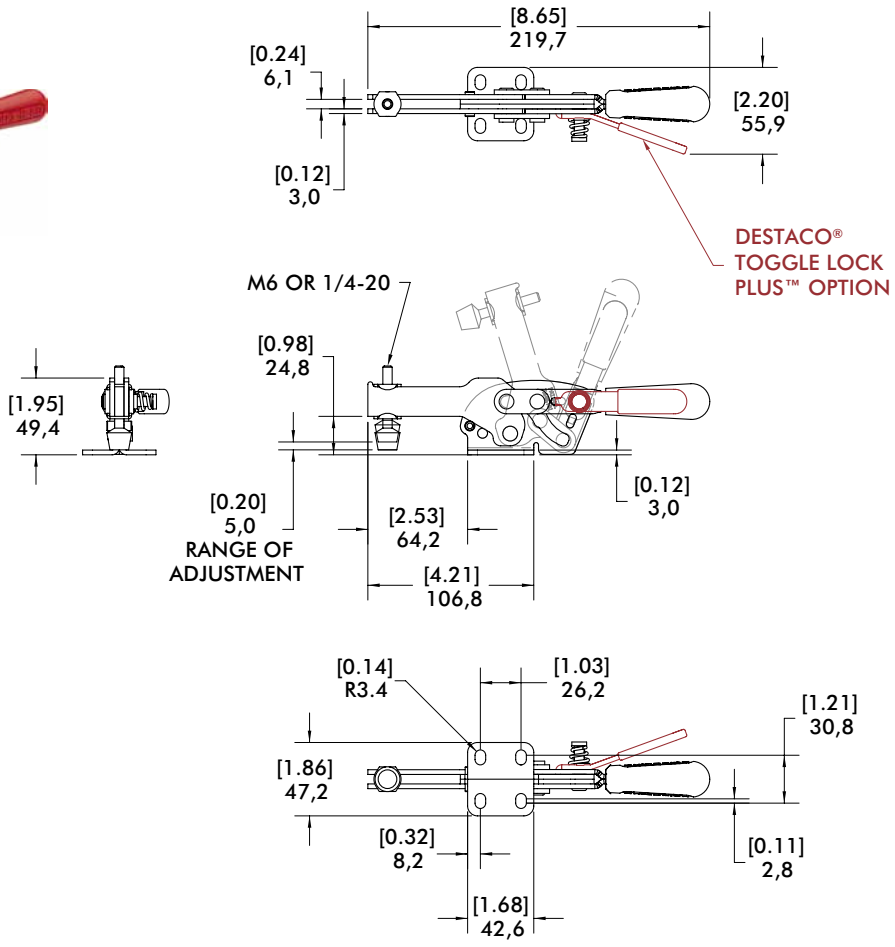

mm [INCH]

THIRD ANGLE
PROJECTION

2027 SERIES

Horizontal Hold Down Clamps | Product Overview

Features:
- Increased handle clearance reduces pinch points
- Common mounting hole pattern to Model 227
- Fixed handle pivot provides smooth action
- Over 1½ times the holding capacity Model 227
- BLK models feature a black, non-reflective finish
- 5 handle colors - see page MC-PRO-7 for details

Applications:
- Checking fixtures
- Assembly & test
- Light machining
- Woodworking
- Closures

Also Available:
See page MC-ACC-1 for accessories

Accommodates M8 or 5/16" spindle accessory

Covered under one or more U.S./International Patents

2027-U
Flanged Base
U-Bar



2027-U-LS-BLKⓘ
Blackout Series
Flanged Base
U-Bar



2027-UR
Flanged Base
U-Bar
DESTACO®
Toggle Lock
Plus™



Color Handles
Available on models in this series that use standard red handles.* Add **-Y**, **-G**, **-B**, **-K** to end of model number.

*Excludes Blackout Series, Toggle Lock Plus levers.



ⓘ This item is available upon request

Technical Information

Model	Max. Holding Capacity	Clamp Bar Opening (+10°)	Handle Opening (+10°)	Weight	Accessories (Supplied)	
					Spindle Assembly	Flanged Washers
2027-U	3740 N [840 lbf]	68°	70°	0,61 kg [1.34 lb]	2007208-M	507107
2027-U-LS-BLKⓘ					--	507107-BLK
2027-UR					2007208-M	507107

ⓘ This item is available upon request

Holding Capacities

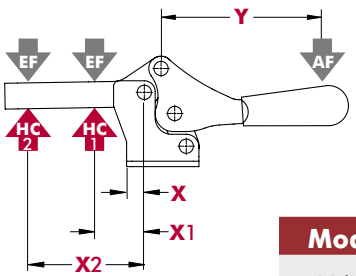

Model	X	X1	X2	Y	‡HC1	‡HC2	‡EF(X1):AF	‡EF(X2):AF
U/UR	[1.02] 25,8	[1.75] 44,5	[3.30] 83,8	[2.54] 64,5	[840 lbf] 3740 N	[480 lbf] 2140 N	5:1	3:1

Dimensions shown "mm [inch]" ‡ **HC** = Holding Capacity, **EF** = Exerting Force, **AF** = Applied Force
See page MC-TEC-4 for additional information.

Horizontal Hold Down Clamps | Dimensions | -U/-UR

2027-U
Flanged Base
U-Bar



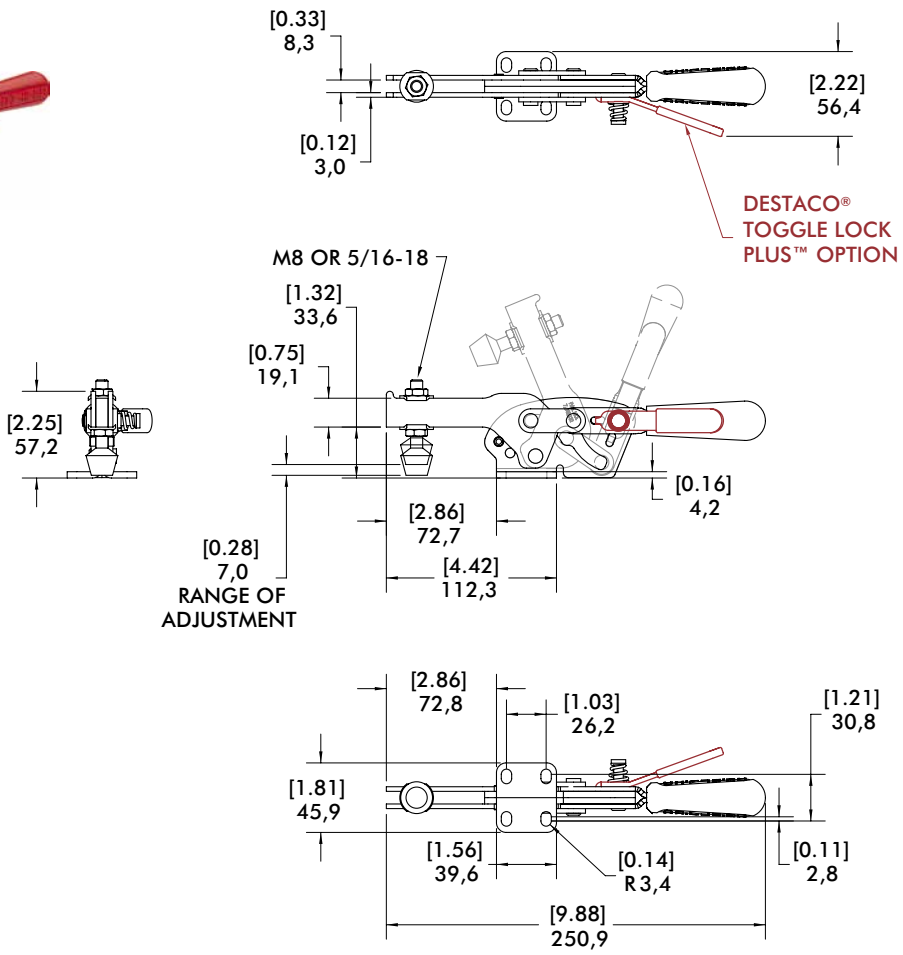

mm [INCH]

THIRD ANGLE
PROJECTION

213 SERIES

Horizontal Hold Down Clamps | Product Overview

Features:
- Low profile
- Large handle clearance in the open position
- Available in stainless steel
- BLK models feature a black, non-reflective finish
- 5 handle colors - see page MC-PRO-7 for details

Applications:
- Assembly
- Checking fixtures
- Closures
- Woodworking

Also Available:
See page MC-ACC-1 for accessories

Accommodates M5 or #10 spindle accessory

213-U/USS
Flanged Base
U-Bar



-USS Stainless Steel Model



213-U-LS-BLKⓘ
Blackout Series
Flanged Base
U-Bar



213-UB
Straight Base
U-Bar



213-UB-LS-BLKⓘ
Blackout Series
Straight Base
U-Bar



213-U-Lⓘ
Flanged Base
Open Bar



213-U-L-BLKⓘ
Flanged Base
Open Bar



213-UB-Lⓘ
Straight Base
Open Bar



213-UB-L-BLKⓘ
Blackout Series
Straight Base
Open Bar



Color Handles
Available on models in this series that use standard red handles.* Add **-Y**, **-G**, **-B**, **-K** to end of model number.

*Excludes Blackout Series.



ⓘ This item is available upon request

Technical Information

Model	Max. Holding Capacity	Clamp Bar Opening (+10°)	Handle Opening (+10°)	Weight	Accessories (Supplied)	
					Spindle Assembly	Flanged Washers
213-U	670 N [150 lbf]	90°	60°	0,08 kg [0.17 lb]	213208-M	102111
213-U-LS-BLKⓘ					--	102111-BLK
213-USS					201943-M	102911
213-UB					213208-M	102111
213-UB-LS-BLKⓘ						102111-BLK
213-U-Lⓘ						102111
213-U-L-BLKⓘ					--	102111-BLK
213-UB-Lⓘ						102111
213-UB-L-BLKⓘ						102111-BLK

ⓘ This item is available upon request

Dimensions and technical information are subject to change without notice

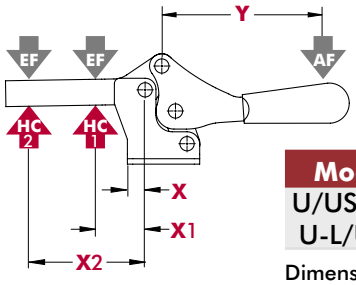

Model	X	X1	X2	Y	‡HC1	‡HC2	‡EF(X1):AF	‡EF(X2):AF
U/USS/UB U-L/UB-L	[0.36] 9,3	[0.75] 19	[1.63] 41,4	[1.81] 46	[150 lbf] 670 N	[70 lbf] 310 N	7:1	3:1

Dimensions shown "mm [inch]" ‡ **HC** = Holding Capacity, **EF** = Exerting Force, **AF** = Applied Force
See page MC-TEC-4 for additional information.

Dimensions | -U/-USS/-UB

213-**U**
Flanged Base
U-Bar



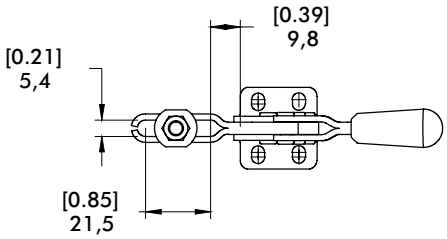

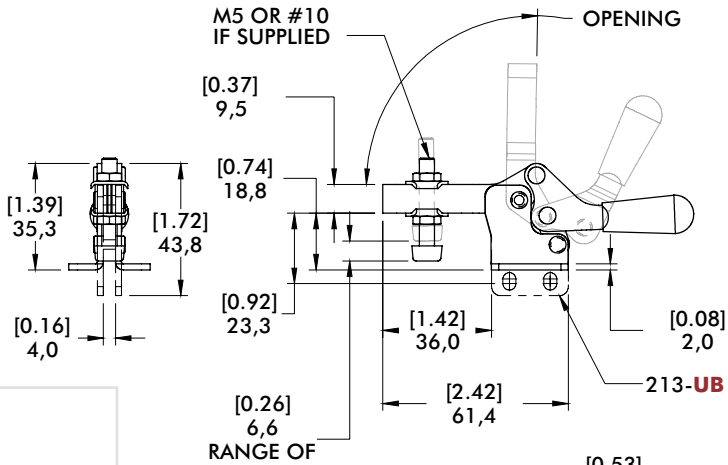

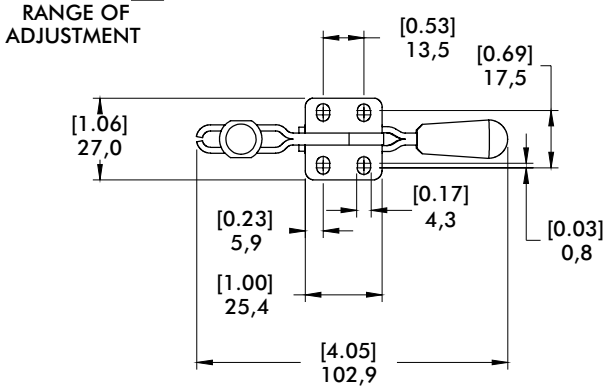

mm [INCH]
THIRD ANGLE
PROJECTION

Series **213** Open Bar Options



See page MC-ACC-7 for Complete offering of Open bar accessories

Flanged Base
Model
213-**U-L**ⓘ



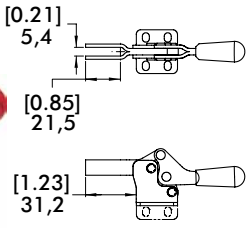

Straight Base
Model
213-**UB-L**ⓘ

217 SERIES

Horizontal Hold Down Clamps | Product Overview

Features:
- Low profile
- Large handle clearance in the open position
- Available in stainless steel
- BLK models feature a black, non-reflective finish
- 5 handle colors - see page MC-PRO-7 for details

Applications:
- Assembly
- Checking fixtures
- Closures
- Woodworking

Also Available:
See page MC-ACC-1 for accessories

Accommodates M6 or ¼" spindle accessory

217-U/USS
Flanged Base
U-Bar



-**USS** Stainless Steel Model



217-U-LS-BLKⓘ
Blackout Series
Flanged Base
U-Bar



217-UB
Straight Base
U-Bar



217-UB-LS-BLKⓘ
Blackout Series
Straight Base
U-Bar



217-U-Lⓘ
Flanged Base
Open Bar



217-U-L-BLKⓘ
Flanged Base
Open Bar



217-UB-Lⓘ
Straight Base
Open Bar



217-UB-L-BLKⓘ
Blackout Series
Straight Base
Open Bar





Color Handles
Available on models in this series that use standard red handles* Add **-Y**, **-G**, **-B**, **-K** to end of model number.

*Excludes Blackout Series.

ⓘ This item is available upon request

Technical Information

Model	Max. Holding Capacity	Clamp Bar Opening (+10°)	Handle Opening (+10°)	Weight	Accessories (Supplied)	
					Spindle Assembly	Flanged Washers
217-U	900 N [200 lbf]	91°	61°	0,18 kg [0.40 lb]	202208-M	215105
217-U-LS-BLKⓘ					--	215105-BLK
217-USS	1110 N [250 lbf]				202943-M	215105
217-UB	900 N [200 lbf]				202208-M	215105
217-UB-LS-BLKⓘ					--	215105-BLK
217-U-Lⓘ						215105
217-U-L-BLKⓘ						215105-BLK
217-UB-Lⓘ						215105
217-UB-L-BLKⓘ						215105-BLK

ⓘ This item is available upon request

Dimensions and technical information are subject to change without notice

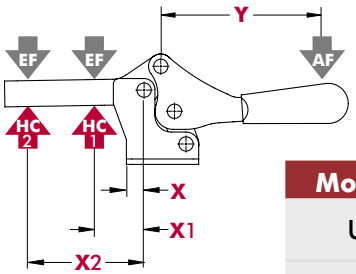

Model	X	X1	X2	Y	‡HC1	‡HC2	‡EF(X1):AF	‡EF(X2):AF
U	[0.53] 13,5	[1.13] 28,6	[2.63] 66,8	[2.93] 74,5	[200 lbf] 900 N	[80 lbf] 360 N	7:1	3:1
USS					[250 lbf] 1110 N	[100 lbf] 440 N		
UB/U-L/ UB-L					[200 lbf] 900 N	[80 lbf] 360 N		

Dimensions shown "mm [inch]" ‡ **HC** = Holding Capacity, **EF** = Exerting Force, **AF** = Applied Force
See page MC-TEC-4 for additional information.

Dimensions | -U/-USS/-UB

Series 217
Open Bar Options



Flanged Base
Model
217-**U-L**ⓘ



Straight Base
Model
217-**UB-L**ⓘ

See page MC-ACC-7 for Complete offering of Open bar accessories

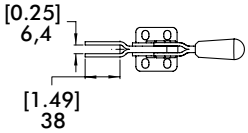

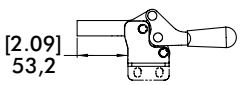

217-**U**
Flanged Base
U-Bar



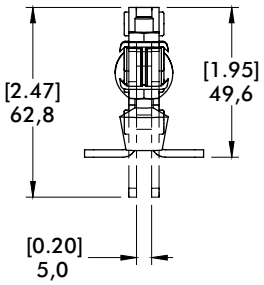

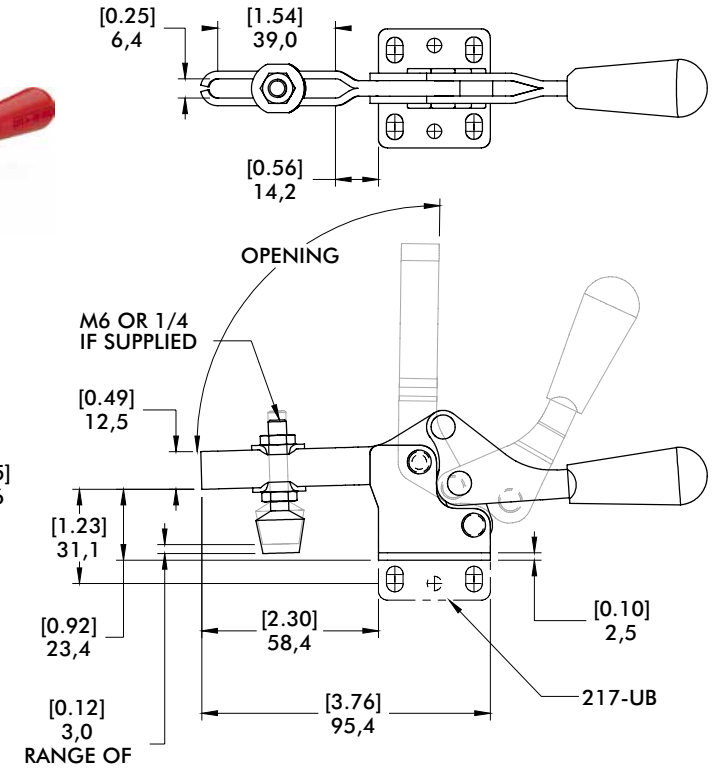

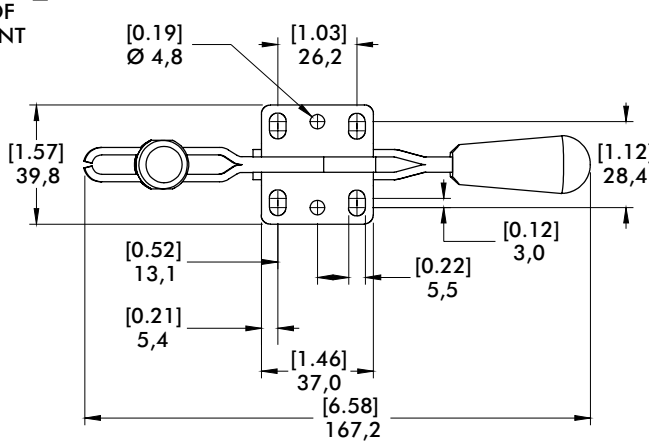

mm [INCH]
THIRD ANGLE
PROJECTION

227 SERIES

Horizontal Hold Down Clamps | Product Overview

Features:
- Low profile
- Large handle clearance in the open position.
- Available in stainless steel
- BLK models feature a black, non-reflective finish
- 5 handle colors - see page MC-PRO-7 for details

Applications:
- Assembly
- Checking fixtures
- Closures
- Woodworking

Also Available:
See page MC-ACC-1 for accessories

Accommodates M6 or $^{5}/_{16}$" spindle accessory

227-U/USS
Flanged Base
U-Bar



-USS Stainless Steel Model



227-U-LS-BLKⓘ
Blackout Series
Flanged Base
U-Bar



227-UB
Straight Base
U-Bar



227-UB-LS-BLKⓘ
Blackout Series
Straight Base
U-Bar



227-U-Lⓘ
Flanged Base
Open Bar



227-U-L-BLKⓘ
Flanged Base
Open Bar



227-UB-Lⓘ
Straight Base
Open Bar



227-UB-L-BLKⓘ
Blackout Series
Straight Base
Open Bar



Color Handles
Available on models in this series that use standard red handles.* Add **-Y**, **-G**, **-B**, **-K** to end of model number.

*Excludes Blackout Series.



ⓘ This item is available upon request

Technical Information

Model	Max. Holding Capacity	Clamp Bar Opening (+10°)	Handle Opening (+10°)	Weight	Accessories (Supplied)	
					Spindle Assembly	Flanged Washers
227-U	2220 N [500 lbf]	91°	56°	0,31 kg [0.68 lb]	225208-M	507107
227-U-LS-BLKⓘ					--	507107-BLK
227-USS	2670 N [600 lbf]				-207943-M	507907
227-UB	2220 N [500 lbf]				225208-M	507107
227-UB-LS-BLKⓘ					--	507107-BLK
227-U-Lⓘ						507107
227-U-L-BLKⓘ						507107-BLK
227-UB-Lⓘ						507107
227-UB-L-BLKⓘ						507107-BLK

ⓘ This item is available upon request

Dimensions and technical information are subject to change without notice

Horizontal Hold Down Clamps | Holding Capacities

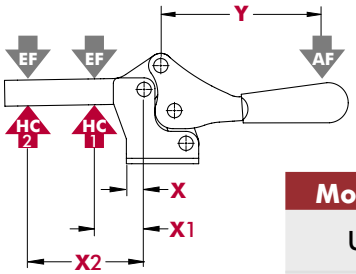

Model	X	X1	X2	Y	‡HC1	‡HC2	‡EF(X1):AF	‡EF(X2):AF
U	[0.39] 10,0	[1.25] 31,8	[2.75] 70,0	[3.58] 91,0	[500 lbf] 2220 N	[225 lbf] 1000 N	8:1	3:1
USS					[600 lbf] 2670 N	[270 lbf] 1200 N		
UB/U-L/ UB-L					500 lbf 2220 N	[225 lbf] 1000 N		

Dimensions shown "mm [inch]" ‡ **HC** = Holding Capacity, **EF** = Exerting Force, **AF** = Applied Force
See page MC-TEC-4 for additional information.

Dimensions | -U/-USS/-UB

227-**U**
Flanged Base
U-Bar



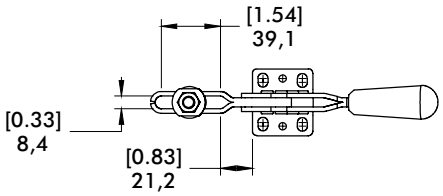

Series **227** Open Bar Options



Flanged Base
Model
227-**U-L**ⓘ

See page MC-ACC-7 for Complete offering of Open bar accessories

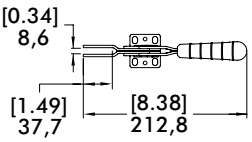



Straight Base
Model
227-**UB-L**ⓘ

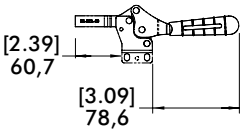

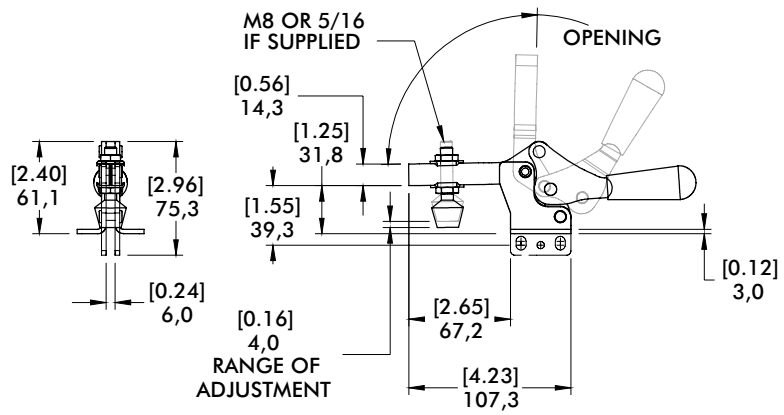

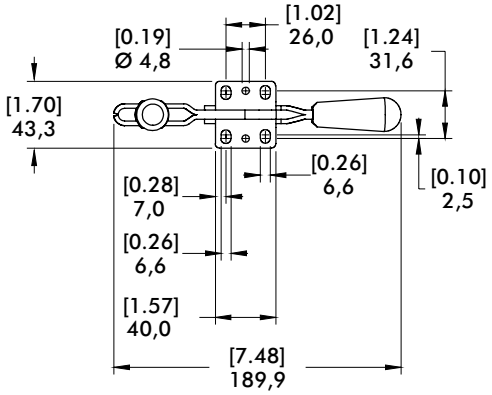

mm [INCH]
THIRD ANGLE PROJECTION

237 SERIES

Horizontal Hold Down Clamps | Product Overview

Features:
- Low profile
- Large handle clearance in the open position.
- Available in stainless steel
- 5 handle colors - see page MC-PRO-7 for details

Applications:
- Assembly
- Checking fixtures
- Welding

Also Available:
See page MC-ACC-1 for accessories

Accommodates M10 or 3/8" spindle accessory

237-U/USS
Flanged Base U-Bar



-USS Stainless Steel Model



Color Handles
Available on this model. Add **-Y**, **-G**, **-B**, **-K** to end of model number.



Technical Information

					Accessories (Supplied)	
Model	Max. Holding Capacity	Clamp Bar Open-ing(+10°)	Handle Opening (+10°)	Weight	Spindle Assembly	Flanged Washers
237-U	3340 N [750 lbf]	93°	59°	0,73 kg [1.60 lb]	240208-M	235106
237-USSⓘ	3780 N [850 lbf]				237943-M	235906

ⓘ This item is available upon request

Holding Capacities

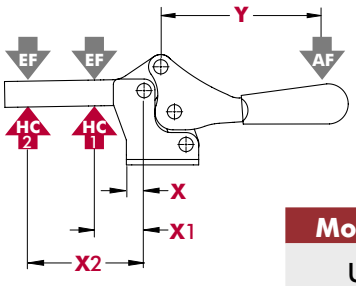

Model	X	X1	X2	Y	‡HC1	‡HC2	‡EF(X1):AF	‡EF(X2):AF
U	[0.81] 20,6	[1.75] 44,5	[4.50] 114,3	[5.25] 133,3	[750 lbf] 3340 N	[290 lbf] 1290 N	6:1	2:1
USS					[850 lbf] 3780 N	[330 lbf] 1470 N		

Dimensions shown "mm [inch]" ‡ **HC** = Holding Capacity, **EF** = Exerting Force, **AF** = Applied Force
See page MC-TEC-4 for additional information.

237-**U**

Flanged Base
U-Bar



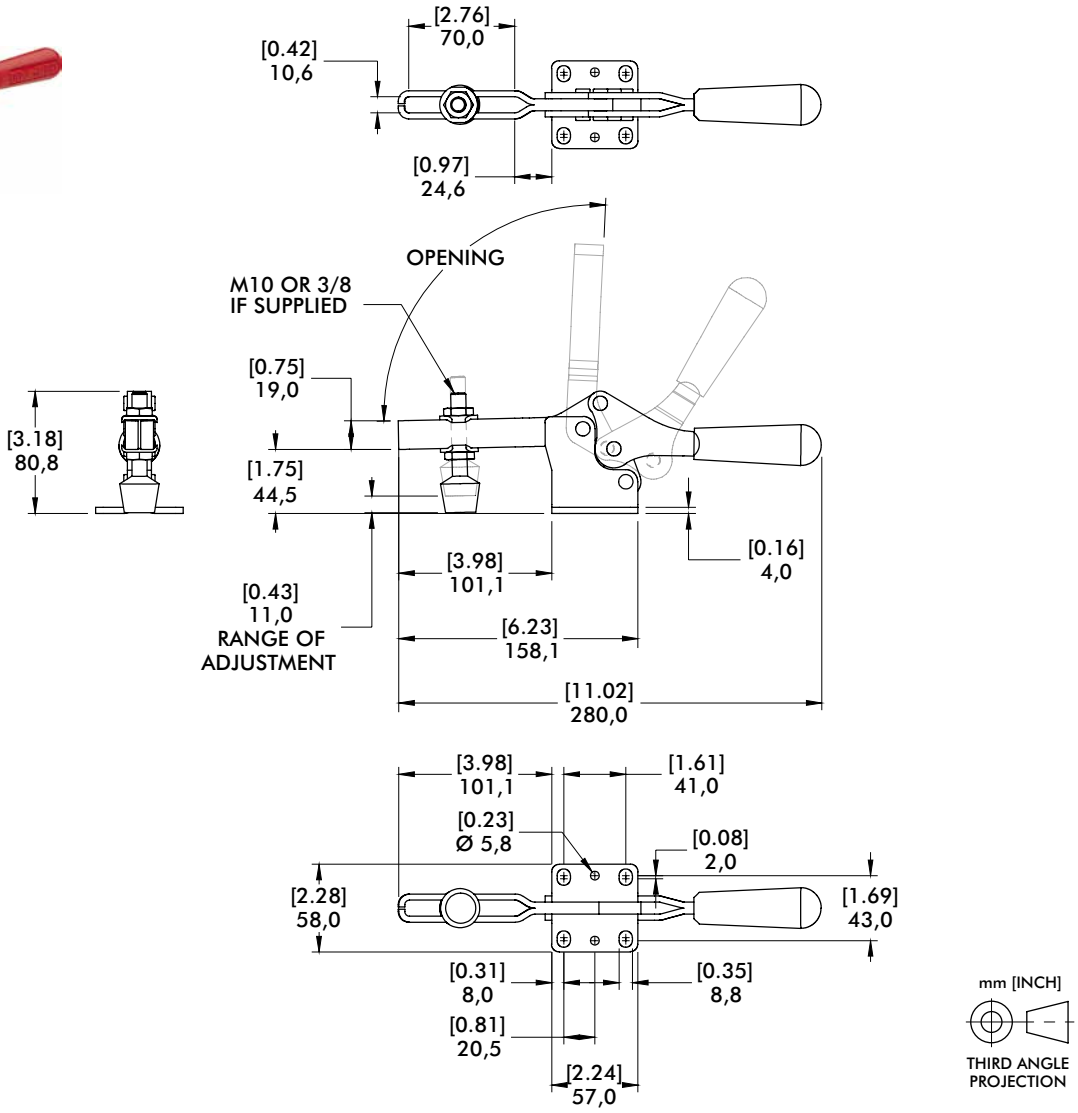

245 SERIES

Horizontal Hold Down Clamps | Product Overview

Features:
- Low profile
- Large handle clearance in the open position.

Applications:
- Assembly
- Checking fixtures
- Welding

Also Available:
See page MC-ACC-1 for accessories

Accommodates M12 or ½" spindle accessory

245-**U**
Flanged Base
U-Bar



Technical Information

Model	Max. Holding Capacity	Clamp Bar Opening (+10°)	Handle Opening (+10°)	Weight	Accessories (Supplied)	
					Spindle Assembly	Flanged Washers
245-U	4450 N [1000 lbf]	105°	74°	1,32 kg [2.90 lb]	247208-M	247109

Holding Capacities

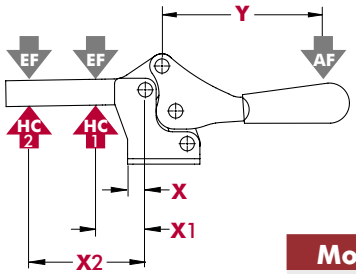

Model	X	X1	X2	Y	‡HC1	‡HC2	‡EF(X1):AF	‡EF(X2):AF
U	[0.50] 12,7	[2.00] 50,8	[5.00] 127	[6.09] 154,7	[1000 lbf] 4450 N	[400 lbf] 1780 N	11:1	5:1

Dimensions shown "mm [inch]" ‡ **HC** = Holding Capacity, **EF** = Exerting Force, **AF** = Applied Force
See page MC-TEC-4 for additional information.

Dimensions and technical information are subject to change without notice

245-U
Flanged Base
U-Bar



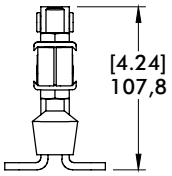

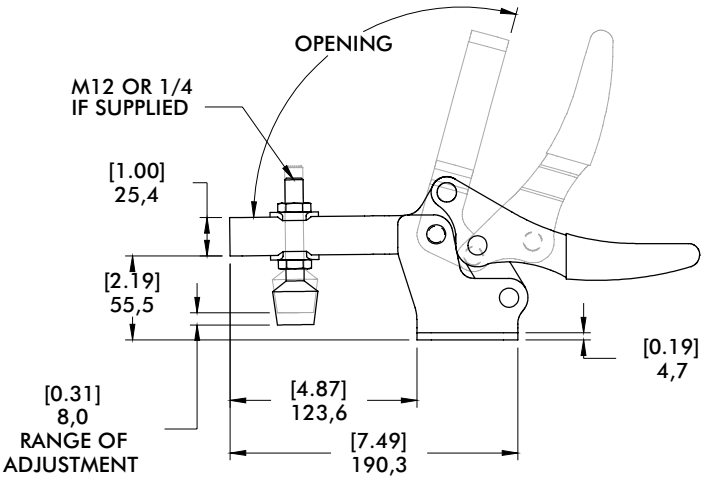

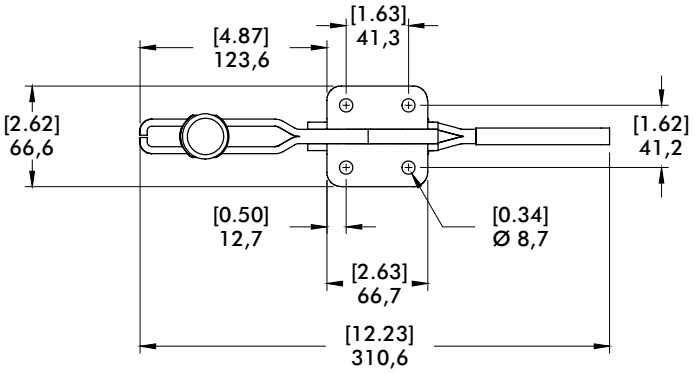

mm [INCH]

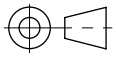

THIRD ANGLE
PROJECTION

205 SERIES

Horizontal Hold Down Clamps | Product Overview

Features:
- Smallest of the Horizontal Hold Down clamps
- Ideal for light duty clamping in tight spaces
- Stainless steel models furnished without plastic grip

Applications:
- Assembly
- Closures
- Woodworking
- Light duty clamping

Also Available:
See page MC-ACC-1 for accessories

Accommodates M4 or #8 spindle accessory

205-U/USS
Flanged Base
U-Bar



-USS Stainless Steel Model

205-UB ⓘ
Straight Base
U-Bar



205-UL ⓘ
Left Flanged Base
U-Bar



205-UR ⓘ
Right Flanged Base
U-Bar



205-S/SSS
Flanged Base
Solid Bar



-USS Stainless Steel Model

205-SB ⓘ
Straight Base
Solid Bar



205-SL ⓘ
Left Flanged Base
Solid Bar



205-SR ⓘ
Right Flanged Base
Solid Bar



Technical Information

Model	Max. Holding Capacity	Clamp Bar Opening (+10°)	Handle Opening (+10°)	Weight	Accessories (Supplied)	
					Spindle Assembly	Flanged Washers
205-U	270 N [60 lbf]	90°	80°	0,03 kg [0.06 lb]	205208-M	105106
205-UB ⓘ						
205-UL ⓘ						
205-UR ⓘ						
205-USS	340 N [75 lbf]				205943-M	105906
205-S	270 N [60 lbf]	94°	82°		205208-M	--
205-SB ⓘ						
205-SL ⓘ						
205-SR ⓘ						
205-SSS	340 N [75 lbf]				205943-M	

ⓘ This item is available upon request

Dimensions and technical information are subject to change without notice

Horizontal Hold Down Clamps | Holding Capacities

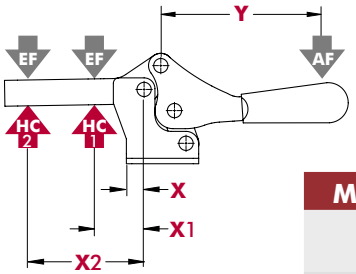

Model	X	X1	X2	Y	‡HC1	‡HC2	‡EF(X1):AF	‡EF(X2):AF
U	[0.22] 5,6	[0.43] 11	[0.81] 20,5	[1.31] 33,2	[60 lbf] 270 N	[50 lbf] 220 N	9:1	5:1
USS					[75 lbf] 340 N	[65 lbf] 290 N		
S		--			--	[60 lbf] 270 N	--	4:1
SSS						[75 lbf] 340 N		

Dimensions shown "mm [inch]" ‡ **HC** = Holding Capacity, **EF** = Exerting Force, **AF** = Applied Force
See page MC-TEC-4 for additional information.

Dimensions | -U/-UB/-UL-/-UR/-USS/-S/-SB/-SL/-SR/-SSS

205-U
Flanged Base
U-Bar



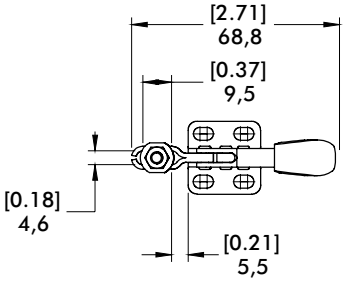

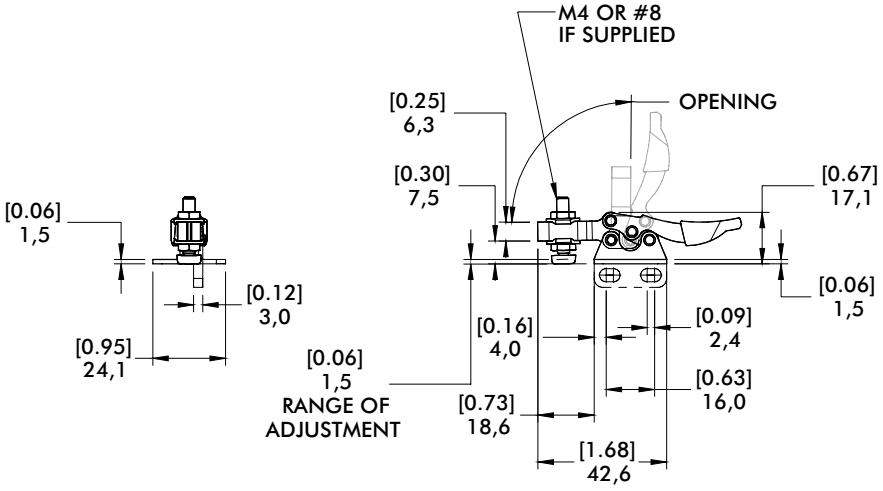

205-S
Flanged Base
Solid Bar



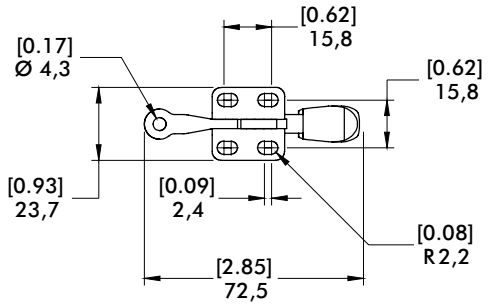

mm [INCH]
THIRD ANGLE
PROJECTION

215 SERIES

Horizontal Hold Down Clamps | Product Overview

Features:
- Low profile
- Stainless steel model furnished without plastic grip

Applications:
- Assembly
- Checking fixtures
- Closures
- Woodworking

Also Available:
See page MC-ACC-1 for accessories

Accommodates M6 or ¼" spindle accessory

215-U/USS
Flanged Base
U-Bar



-**USS** Stainless Steel Model

215-UB ⓘ
Straight Base
U-Bar



215-S
Flanged Base
Solid Bar



Technical Information

Model	Max. Holding Capacity	Clamp Bar Opening (+10°)	Handle Opening (+10°)	Weight	Accessories (Supplied)		
					Spindle Assembly	Flanged Washers	Bolt Retainer
215-U	890 N [200 lbf]	87°	78°	0,15 kg [0,34 lb]	202208-M	215105	--
215-USS	1110 N [250 lbf]				202943-M	215905	
215-UB ⓘ	890 N [200 lbf]				202208-M	215105	
215-S					--	--	205105

ⓘ This item is available upon request

Holding Capacities

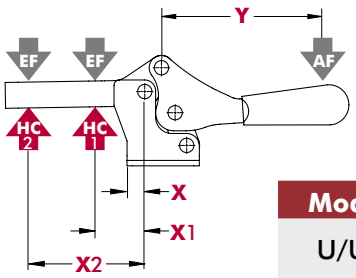

Model	X	X1	X2	Y	‡HC1	‡HC2	‡EF(X1):AF	‡EF(X2):AF
U/UB	[0.22] 5,6	[1.00] 25,4	[2.25] 57	[2.72] 69	[200 lbf] 890 N	[80 lbf] 360 N	9:1	4:1
USS					[250 lbf] 1110 N	[110 lbf] 490 N		
S		[1.63] 41,4	[2.88] 73		[200 lbf] 890 N		6:1	

Dimensions shown "mm [inch]" ‡ **HC** = Holding Capacity, **EF** = Exerting Force, **AF** = Applied Force
See page MC-TEC-4 for additional information.

Dimensions and technical information are subject to change without notice

Horizontal Hold Down Clamps | Dimensions | -U/-USS/-UB/-S

215-U
Flanged Base
U-Bar



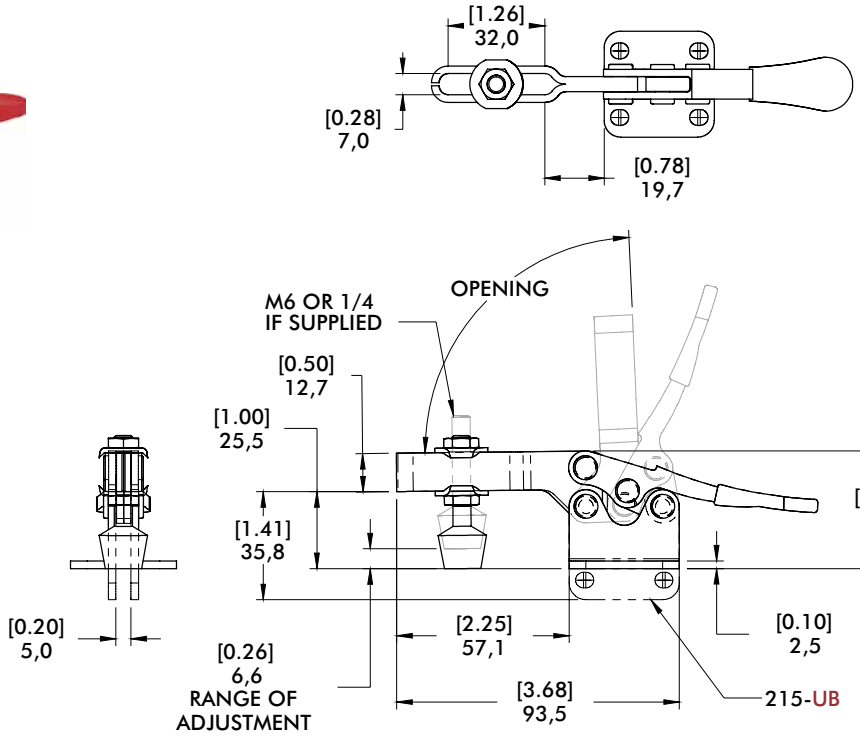

215-S
Flanged Base
Solid Bar



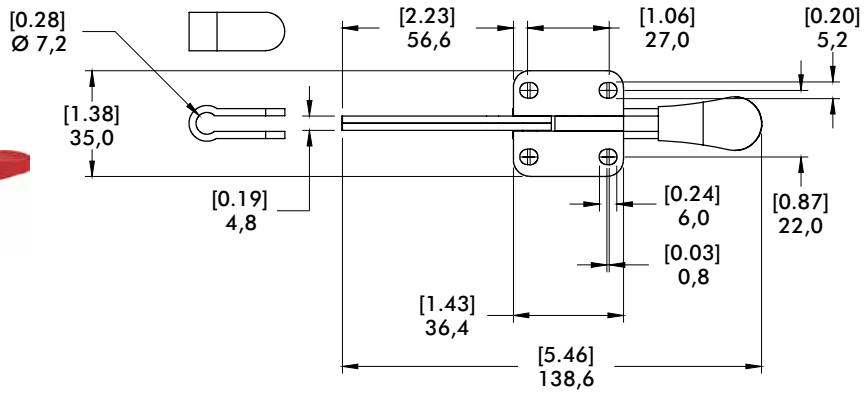

225 SERIES

Horizontal Hold Down Clamps | Product Overview

Features:
- Low profile
- Stainless steel model furnished without plastic grip
- Available DESTACO® Toggle Lock Plus™

Applications:
- Assembly
- Checking fixtures
- Closures
- Woodworking

Also Available:
See page MC-ACC-1 for accessories

Accommodates M8 or 5/16" spindle accessory

Covered under one or more U.S./International Patents

225-U/USS
Flanged Base
U-Bar



-**USS** Stainless Steel Model

225-UR/URSS
Flanged Base
U-Bar
DESTACO® Toggle Lock Plus



-**URSS** Stainless Steel Model

225-UB/UBSSⓘ
Straight Base
U Bar



-**UBSS** Stainless Steel Model

225-UF
Front Mount Base
U-Bar



Technical Information

					Accessories (Supplied)	
Model	Max. Holding Capacity	Clamp Bar Opening (+10°)	Handle Opening (+10°)	Weight	Spindle Assembly	Flanged Washers
225-U	2220 N [500 lbf]	92°	70°	0,25 kg [0.55 lb]	225208-M	507107
225-USS	2670 N [600 lbf]				207943-M	507907
225-UR	2220 N [500 lbf]			0,31 kg [0.69 lb]	225208-M	507107
225-URSS	2670 N [600 lbf]				207943-M	507907
225-UBⓘ	2220 N [500 lbf]			0,25 kg [0.55 lb]	225208-M	507107
225-UBSSⓘ	2670 N [600 lbf]				207943-M	507907
225-UF	2220 N [500 lbf]			0,32 kg [0.70 lb]	215208-M	507107

ⓘ This item is available upon request

Horizontal Hold Down Clamps | Holding Capacities

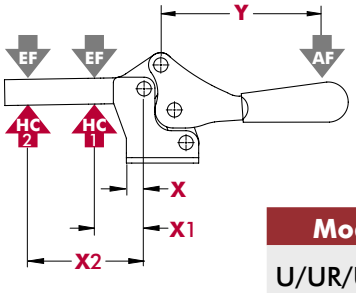

Model	X	X1	X2	Y	‡HC1	‡HC2	‡EF(X1):AF	‡EF(X2):AF
U/UR/UB/UF	[0.12] 3,0	[1.25] 31,8	[2.50] 63,5	[3.56] 90,4	[500 lbf] 2220 N	[250 lbf] 1110 N	12:1	5:1
USS/URSS/ UBSS					[600 lbf] 2670 N	[300 lbf] 1340 N		

Dimensions shown "mm [inch]" ‡ **HC** = Holding Capacity, **EF** = Exerting Force, **AF** = Applied Force
See page MC-TEC-4 for additional information.

Dimensions | -U/-USS-/UB/-UBSS

mm [INCH]
THIRD ANGLE PROJECTION

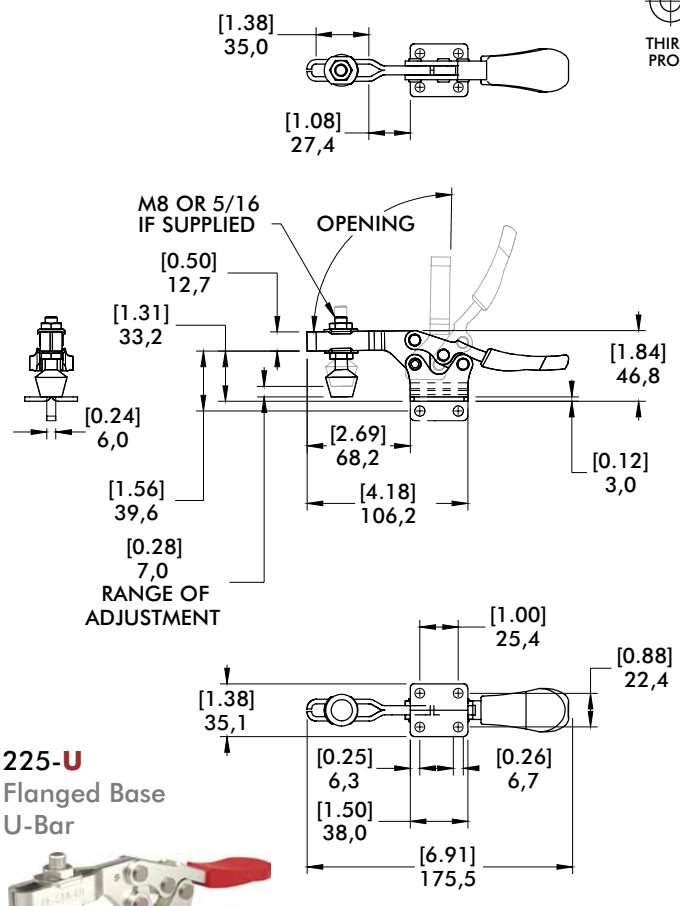

225-U
Flanged Base
U-Bar



Dimensions | -UR/-URSS

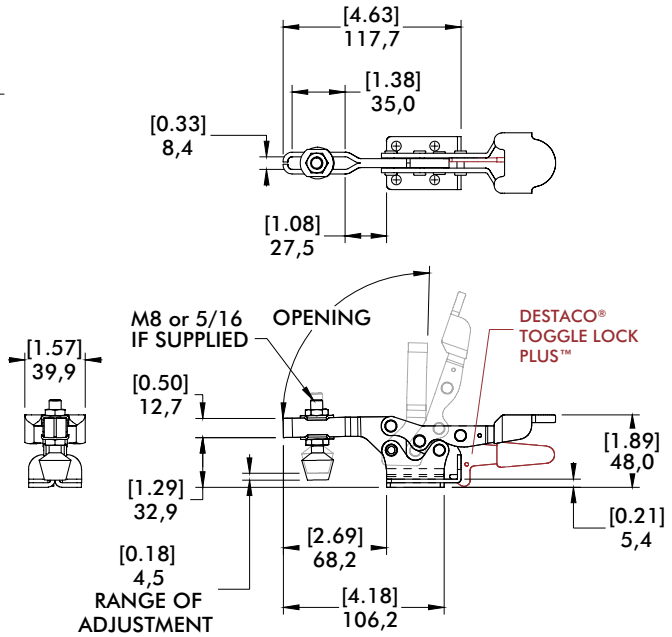

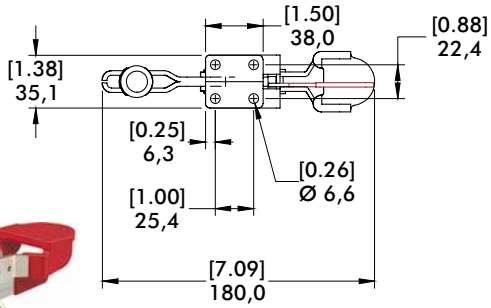

225-UR/URSS
Flanged Base
U-Bar
DESTACO®
Toggle Lock
Plus



225 SERIES

Horizontal Hold Down Clamps | Dimensions | -UF

225-UF
Front Mount Base
U-Bar



mm [INCH]

THIRD ANGLE PROJECTION

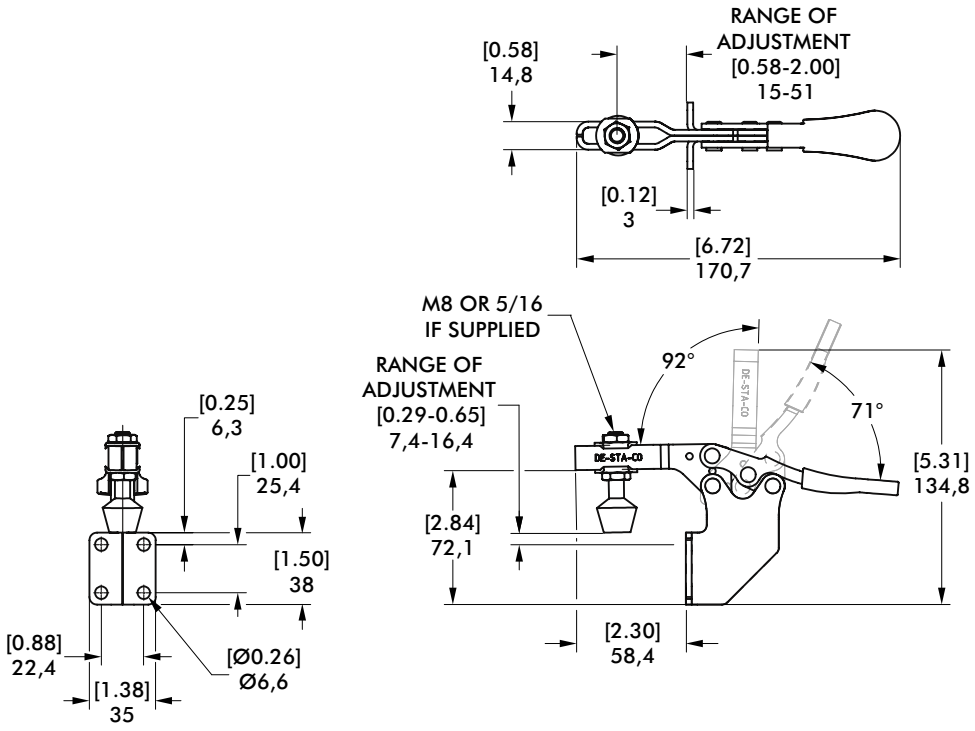

- 5 handle colors - see page MC-PRO-7 for details

Dimensions and technical information are subject to change without notice

235 SERIES

Horizontal Hold Down Clamps | Product Overview

Features:
- Low profile
- Available DESTACO® Toggle Lock Plus™
- Available in stainless steel
- 5 handle colors - see page MC-PRO-7 for details

Applications:
- Assembly
- Checking fixtures
- Welding
- Closures
- Woodworking

Also Available:
See page MC-ACC-1 for accessories

Accommodates M10 or 3/8" spindle accessory

Covered under one or more U.S./International Patents

235-U/USS
Flanged Base
U-Bar



-**USS** Stainless Steel Model



235-UR/URSS
Flanged Base
U-Bar
DESTACO® Toggle Lock Plus



-**URSS** Stainless Steel Model



235-UBⓘ
Straight Base
U Bar



235-UF
Front Mount Base
U-Bar





Color Handles
Available on models in this series that use standard red handles.* Add **-Y**, **-G**, **-B**, **-K** to end of model number.

*Excludes Toggle Lock Plus levers or dipped handles.

Technical Information

Model	Max. Holding Capacity	Clamp Bar Opening (+10°)	Handle Opening (+10°)	Weight	Accessories (Supplied)	
					Spindle Assembly	Flanged Washers
235-U	3340 N [750 lbf]	92°	70°	0,67 kg [1.47 lb]	240208-M	235106
235-USS	3780 N [850 lbf]				237943-M	235906
235-UR	3340 N [750 lbf]			0,74 kg [1.64 lb]	240208-M	235106
235-URSS	3780 N [850 lbf]				237943-M	235906
235-UBⓘ	3340 N [750 lbf]			0,67 kg [1.47 lb]	240208-M	235106
235-UF				0,92 kg [2.03 lb]	2007208-M	507107

ⓘ This item is available upon request

Holding Capacities

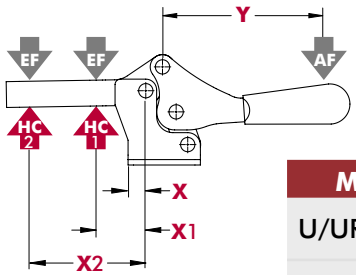

Model	X	X1	X2	Y	‡HC1	‡HC2	‡EF(X1):AF	‡EF(X2):AF
U/UR/UB/UF	[0.25] 6,4	[1.75] 44,5	[4.13] 105	[5.75] 146	[750 lbf] 3340 N	[300 lbf] 1330 N	9:1	5:1
USS/URSS					[850 lbf] 3780 N	[360 lbf] 1600 N		

Dimensions shown "mm [inch]" ‡ **HC** = Holding Capacity, **EF** = Exerting Force, **AF** = Applied Force
See page MC-TEC-4 for additional information.

235 SERIES

Horizontal Hold Down Clamps | Dimensions | -U/-USS/-UR/-URSS/-UB

235-U
Flanged Base
U-Bar



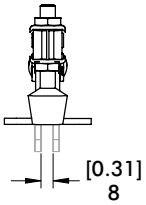

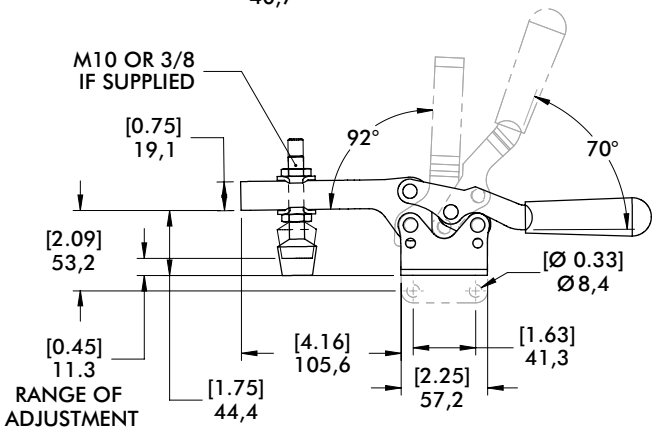

Dimensions | -UR

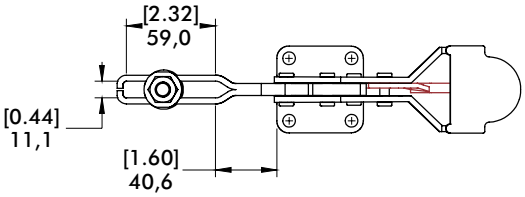

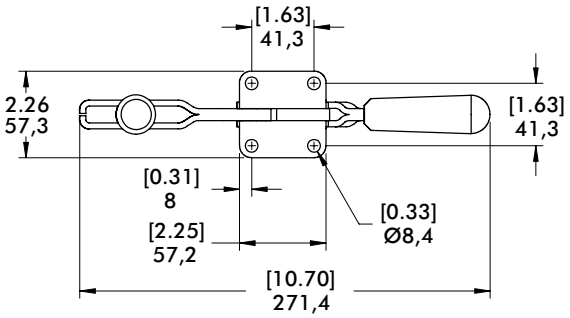

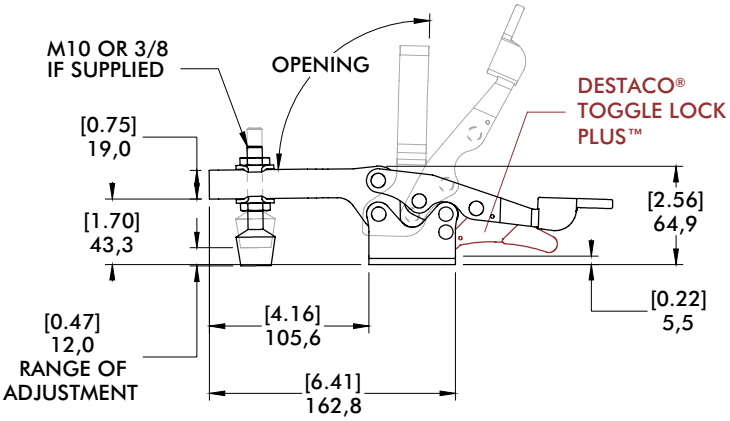

mm [INCH]
THIRD ANGLE
PROJECTION

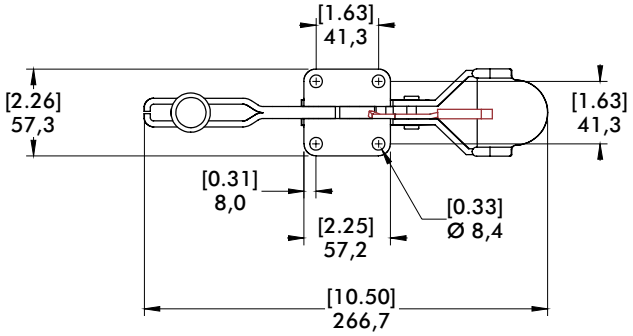

235-UR
Flanged Base
U-Bar
DESTACO®
Toggle
Lock
Plus™



Dimensions and technical information are subject to change without notice

235-UF

Front Mount Base
U-Bar



305, 307, 309 SERIES

Horizontal Hold Down Clamps | Product Overview

Features:
- Compact design suitable for use in confined spaces
- Available DESTACO® Toggle Lock Plus™
- Stainless steel models available

Applications:
- Assembly & Test
- Light Machining
- Closures
- Woodworking

Also Available:
See page MC-ACC-1 for accessories

305-**U**/**USS**
Flanged Base
U-Bar



-**USS** Stainless Steel Model



305-**UR**/**URSS**
Flanged Base
U-Bar
DESTACO® Toggle Lock Plus™



-**URSS** Stainless Steel Model



307-**U**/**USS**
Flanged Base
U-Bar



-**USS** Stainless Steel Model



307-**UR**/**URSS**
Flanged Base
U-Bar
DESTACO® Toggle Lock Plus™



-**URSS** Stainless Steel Model



309-**U**/**USS**
Flanged Base
U-Bar



-**USS** Stainless Steel Model



309-**UR**ⓘ
Flanged Base
U-Bar
DESTACO® Toggle Lock Plus™



Technical Information

Model	Max. Holding Capacity	Clamp Bar Opening (+10°)	Handle Opening (+10°)	Weight	Accessories (Supplied)	
					Spindle Assembly	Flanged Washers
305-U	670 N [150 lbf]	90°	170°	0,06 kg [0.13 lb]	305208-M	102111
305-USS	900 N [200 lbf]				305908-M	102911
305-UR	670 N [150 lbf]				305208-M	102111
305-URSS	900 N [200 lbf]				305908-M	102911
307-U	1560 N [350 lbf]	92°	173°	0,24 kg [0.54 lb]	307208-M	507107
307-USS					207943-M	507907
307-UR					307208-M	507107
307-URSS					207943-M	507907
309-U	3340 N [750 lbf]	90°	168°	1,30 kg [0.59 lb]	309208	235106
309-USS					237943-M	235906
309-URⓘ					309208	235106

ⓘ This item is available upon request

Dimensions and technical information are subject to change without notice

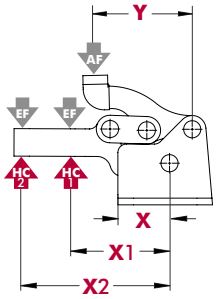

Model	X	X1	X2	Y	‡HC1	‡HC2	‡EF(X1):AF	‡EF(X2):AF
305-U/UR	[0.58] 14,6	[1.38] 35	[1.88] 47,7	[1.14] 29	[150 lbf] 670 N	[110 lbf] 490 N	3:1	2:1
305-USS/ 305-URSS					[200 lbf] 900 N	[150 lbf] 670 N		
307-U/UR/ USS/URSS	[0.94] 24	[1.88] 47,7	[2.50] 63,5	[1.77] 45	[350 lbf] 1560 N	[260 lbf] 1160 N		
309-U/UR/USS	[1.34] 34	[2.50] 63,5	[3.50] 89	[2.70] 68,5	[750 lbf] 3340 N	[530 lbf] 2360 N	4:1	

Dimensions shown "mm [inch]" ‡ **HC** = Holding Capacity, **EF** = Exerting Force, **AF** = Applied Force
See page MC-TEC-4 for additional information.

Dimensions | -U/-USS/-UR/-URSS

305-U
Flanged Base
U-Bar



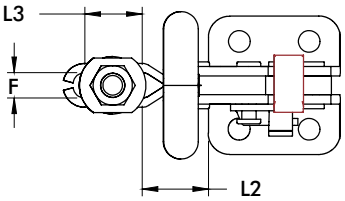

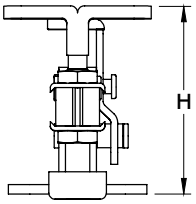

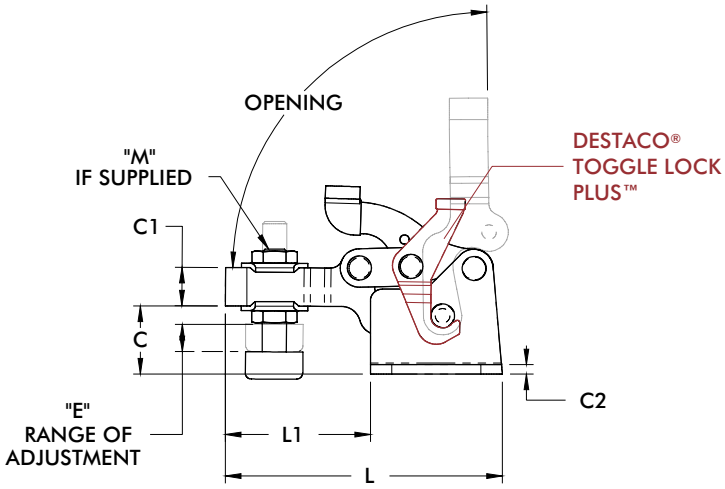

307-UR
Flanged Base
U-Bar
DESTACO®
Toggle Lock
Plus™



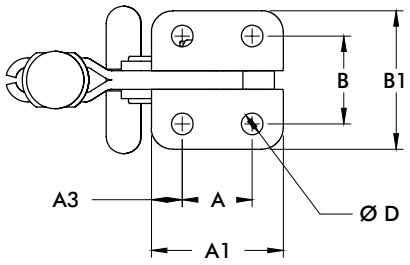

mm [INCH]
THIRD ANGLE
PROJECTION

Model	A	A1	A3	B	B1	C	C1	C2	D	E	F	H	L	L1	L2	L3	M
305-U/UR	[0.53] 13,5	[1.035] 26,3	[0.25] 6,4	[0.62] 16,0	[1.02] 25,9	[0.48] 12,2	[0.31] 7,9	[0.08] 2,0	[0.18] 4,6	[0.31] 8	[0.21] 5,3	[1.43] 36,3	[2.21] 56,1	[1.19] 30,2	[0.51] 13,0	[0.50] 12,7	[#10] M5
307-U/UR	[0.91] 23,1	[1.72] 43,7	[0.40] 10,2	[1.14] 29,0	[1.80] 45,7	[0.89] 22,6	[0.50] 12,7	[0.12] 3,0	[0.28] 7,1	[0.37] 9,5	[0.33] 8,4	[2.36] 59,9	[3.61] 91,7	[1.89] 48,0	[0.86] 21,8	[0.75] 19,1	[5/16] M8
309-U/UR	[1.38] 35,1	[2.52] 64,0	[0.58] 14,7	[1.50] 38,1	[2.47] 62,7	[1.31] 33,3	[0.75] 19,1	[0.12] 3,0	[0.33] 8,4	[0.72] 18,5	[0.44] 10,4	[3.53] 89,7	[5.19] 131,8	[2.68] 68,1	[1.28] 32,5	[1.06] 26,9	[3/8-16] M10

206 SERIES

Horizontal Hold Down Clamps | Product Overview

Features:
- All stainless steel construction
- Offers good bar clearance under clamping bar while maintaining low profile

Applications:
- Assembly
- Chemical processing
- Closures
- Light duty clamping

Also Available:
See page MC-ACC-1 for accessories

Accommodates M4 or #8 spindle accessory

206-SS
Flanged Base
Low U-Bar
Stainless Steel



206-HSS
Flanged Base
High U-Bar
Stainless Steel



Technical Information

Model	Max. Holding Capacity	Clamp Bar Opening (+10°)	Handle Opening (+10°)	Weight	Accessories (Supplied)	
					Spindle Assembly	Flanged Washers
206-SS	440 N [100 lbf]	90°	90°	0,03 kg [0.07 lb]	205943-M	105906
206-HSS		85°*	85°*			

*with spindle installed

Model 206-HSS shown securing a platen on a prototyping machine.



Dimensions and technical information are subject to change without notice

Horizontal Hold Down Clamps | Holding Capacities

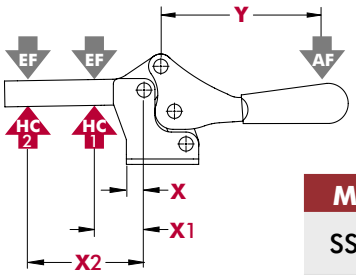

Model	X	X1	X2	Y	‡HC1	‡HC2	‡EF(X1):AF	‡EF(X2):AF
SS/HSS	[0.20] 5	[0.43] 11	[1.06] 27	[1.14] 29	[100 lbf] 440 N	[50 lbf] 220 N	5:1	3:1

Dimensions shown "mm [inch]" ‡ **HC** = Holding Capacity, **EF** = Exerting Force, **AF** = Applied Force
See page MC-TEC-4 for additional information.

Dimensions | -SS/-HSS

206-**SS**
Flanged Base
Low U-Bar
Stainless Steel



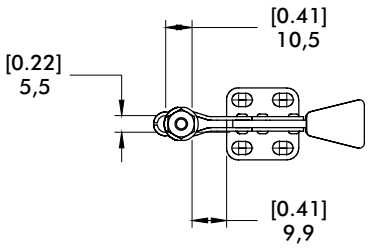

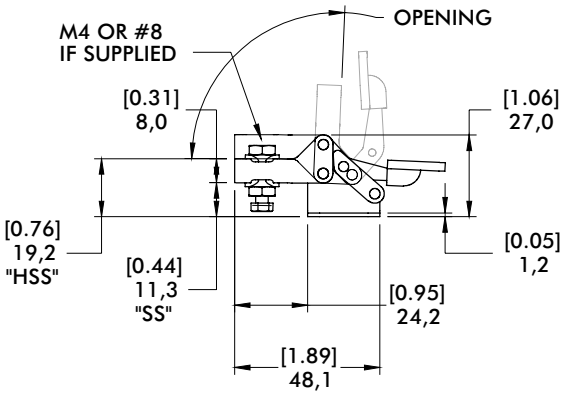

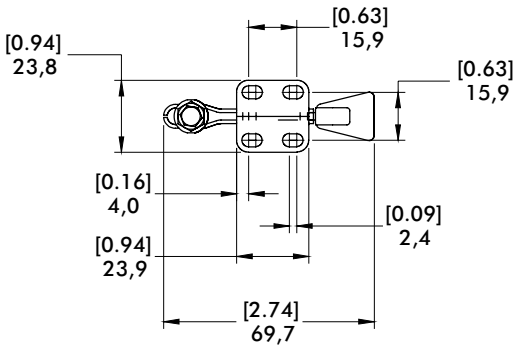

mm [INCH]
THIRD ANGLE PROJECTION

5305, 5310 SERIES

Heavy Duty Horizontal Hold Down Clamps | Product Overview

Features:
- Solid clamping arm may be modified to suit requirements
- Hardened steel pivot pins and bushings provide long life
- Black oxide finish
- DESTACO® Toggle Lock Plus™ versions available†
- 5 handle colors - see page MC-PRO-7 for details

Applications:
- Welding fixtures
- Assembly fixtures
- Light machining



5305/5310
Flanged Base



5305-**B**/5310-**B**
Solid
Base



5305-**R**/5310-**R**
Flanged Base
DESTACO®
Toggle Lock
Plus™



5305-**BR**ⓘ/5310-**BR**ⓘ
Solid Base
DESTACO®
Toggle Lock
Plus™



Technical Information

Model	Max. Holding Capacity	Clamp Bar Opening (+10°)	Handle Opening (+10°)	Weight
5305	[600 lbf] 2670 N	90°	69°	[1.08lbs] 0,49 kg
5305-B				[0.82lbs] 0,37 kg
5305-R				[1.09lbs] 0,49 kg
5305-BRⓘ				[0.83lbs] 0,37 kg
5310	[1300 lbf] 5780 N	90°	69°	[2.84lbs] 1,29 kg
5310-B				[2.24lbs] 1,02 kg
5310-R				[2.87lbs] 1,30 kg
5310-BRⓘ				[2.27lbs] 1,03 kg

ⓘ This item is available upon request.
† Toggle Lock Plus™ locks the handle in the closed position only.

Color Handles
Available on models in this series that use standard red handles.* Add **-Y**, **-G**, **-B**, **-K** to end of model number.

*Excludes Toggle Lock Plus levers or dipped handles.



Holding Capacities

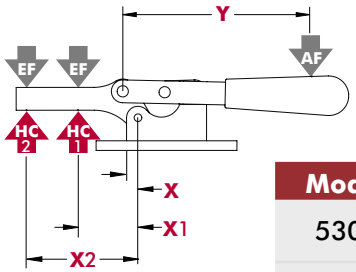

Model	X	X1	X2	Y	‡HC1	‡HC2	‡EF(X1):AF	‡EF(X2):AF
5305	[0.25] 6,3	[1.57] 40	[2.75] 70	[4.92] 125	[600 lbf] 2670 N	[340 lbf] 1500 N	10:1	5:1
5310	[0.38] 9,5	[1.97] 50	[3.66] 93	[6.10] 155	[1300 lbf] 5780 N	[675 lbf] 3000 N	10:1	8:1

Dimensions shown "mm [inch]" ‡ **HC** = Holding Capacity, **EF** = Exerting Force, **AF** = Applied Force
See page MC-TEC-4 for additional information.

5305, 5310 SERIES

Heavy Duty Horizontal Hold Down Clamps | Dimensions



5305/5310
Flanged Base

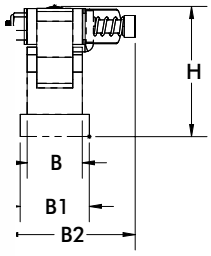

mm [INCH]
THIRD ANGLE PROJECTION

Model	A	A1	A2	A3	A4	A5	B	B1	B2	C	C1	C2	D	F	H	L
5305	[2.50] 63,5	[3.15] 80,0	[2.12] 53,8	[2.75] 69,9	[4.63] 117,6	[5.27] 133,9	[0.79] 20,1	[0.98] 24,9	--	[0.81] 20,6	[0.51] 13,0	[0.31] 7,9	[0.35] 8,9	[0.51] 13,0	[1.51] 38,4	[8.36] 212,4
5305-R									[1.84] 46,7							
5310	[3.63] 92,2	[4.63] 117,6	[2.63] 66,8	[3.63] 92,2	[6.25] 158,8	[7.25] 184,2	[1.13] 28,7	[1.50] 38,1	--	[1.00] 25,4	[0.75] 19,1	[0.31] 7,9	[0.41] 10,4	[0.79] 20,1	[2.00] 50,8	[11.13] 282,6
5310-R									[2.31] 58,7							[11.02] 279,8

Model	A3	A4	B2	C	C1	F	H	L
5305-B	[2.75] 69,9	[4.63] 117,6	--	[0.81] 20,6	[0.51] 13,0	[0.51] 13,0	[1.51] 38,4	[8.36] 212,4
5305-BR ⓘ			[1.84] 46,7					
5310-B	[3.63] 92,2	[6.25] 158,8	--	[1.00] 25,4	[0.75] 19,1	[0.79] 20,1	[2.35] 59.6	[11.13] 282,6
5310-BR ⓘ			[2.31] 58,7					[11.02] 279,8

ⓘ This item is available upon request

6001 SERIES

Straight Line Action Clamps | Product Overview

Features:
- Heavier duty version of Model 601 with 50% more holding capacity
- Mounting pattern interchangeable with Model 601
- Allow handle to fall below mounting plane to lock in retracted position

Applications:
- Assembly
- Testing
- Soldering
- Gluing

Also Available:
See page MC-ACC-1 for accessories

6001
6001-**M**



6001-**SS**
6001-**MSS**



Technical Information | Holding Capacities | Dimensions

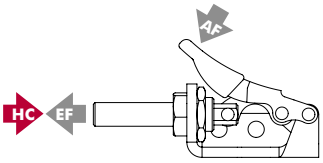

Model	Max. Holding Capacity	Weight	EF:AF (pushing/ pulling)	Plunger Travel	(M) Plunger Thread	Spindle (Recom-mended)	Spindle Included
6001	[150 lbf] 670 N	[0.12 lb] 0,05 kg	14:1/25:1	[0.63] 16	#8-32	105203	No
6001-M					M4	205208-M	
6001-SS					#8-32	205943	Yes
6001-MSS					M4	205943-M	

HC = Holding Capacity, **EF** = Exerting Force, **AF** = Applied Force

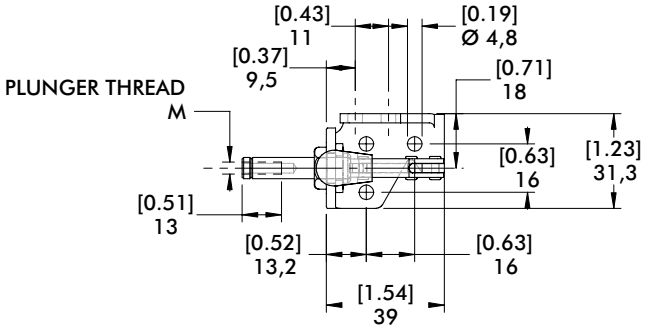

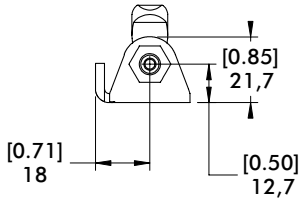

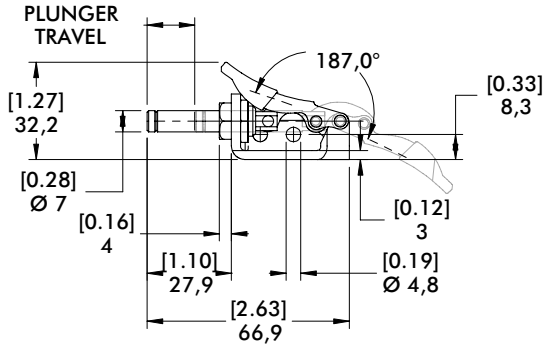

mm [INCH]

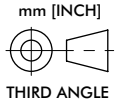

THIRD ANGLE
PROJECTION

Dimensions and technical information are subject to change without notice

601 SERIES

Straight Line Action Clamps | Product Overview

Features:
- Compact straight line action clamp

Applications:
- Assembly
- Testing
- Soldering
- Gluing

Also Available:
See page MC-ACC-1 for accessories

601



601-**M**



601-**O**
External Thread



601-**SS**
Stainless steel



601-**OSS**ⓘ
Stainless steel
External thread



Technical Information | Holding Capacities | Dimensions

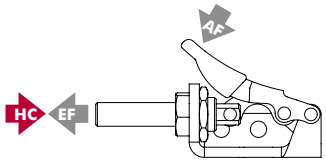

Model	Max. Holding Capacity	Weight	EF:AF (pushing/ pulling)	Plunger Travel	(M) Plunger Thread	Spindle (Recom-mended)	Spindle Included
601	[100 lbf] 440 N	[0.09 lb] 0,04 kg	14:1/25:1	[0.63] 16	#8-32	105203	Yes
601-M					M4	205208-M	No
601-O					1/4-20	--	
601-SS					#8-32	205943	Yes
601-OSSⓘ					1/4-20	--	No

ⓘ This item is available upon request **HC** = Holding Capacity, **EF** = Exerting Force, **AF** = Applied Force

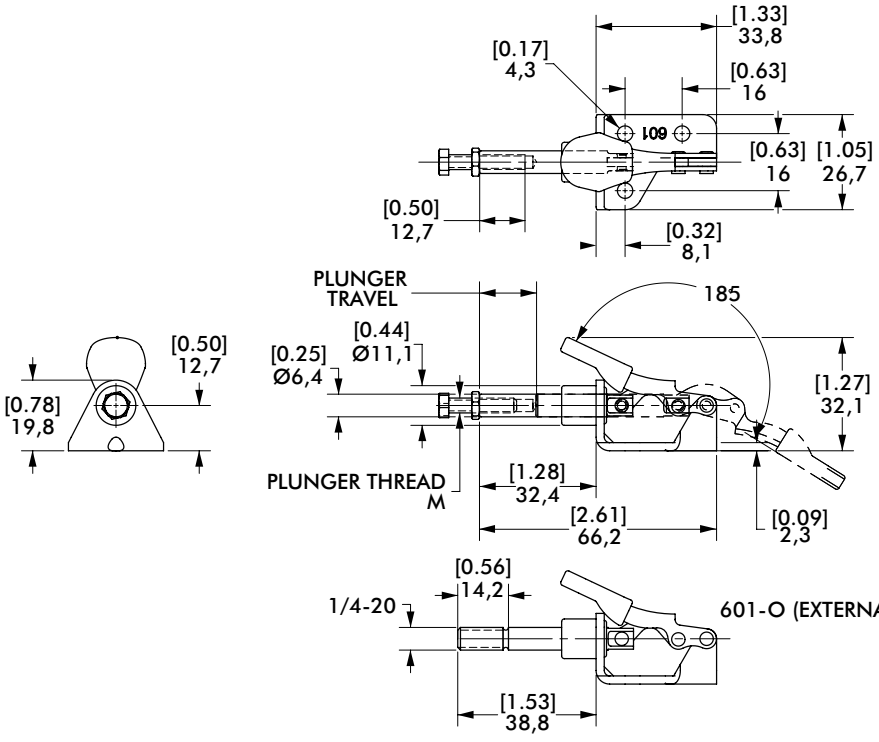

6015 SERIES

Straight Line Action Clamps | Product Overview

Features:
- Smallest of the solid base Straight Line Action clamps
- Compact design combined with high holding capacity
- Allow handle to fall below mounting plane to lock in retracted position

Covered under one or more U.S./International Patents

Applications:
- Assembly
- Checking fixtures
- Tensioning devices

Also Available:
See page MC-ACC-1 for accessories

6015
6015-**M**



6015-**SS**,
6015-**MSS**
Stainless Steel



6015-**R**,
6015-**MR**
with DESTACO® Toggle Lock Plus™



Technical Information | Holding Capacities

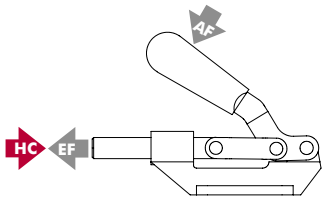

Model	Max. Holding Capacity	Weight	EF:AF (pushing)	Plunger Travel	(M) Plunger Thread	Recommended Spindle (Not Supplied)
6015	[560 lbf] 2500 N	[0.35 lb] 0,15 kg	35:1	[0.70] 17,8	1/4-20	205203
6015-M					M6	205203-M
6015-SS	[630 lbf] 2800 N				1/4-20	202943 (supplied)
6015-MSS					M6	202916-M (supplied)
6015-R	[560 lbf] 2500 N				1/4-20	205203
6015-MR					M6	205203-M

HC = Holding Capacity, **EF** = Exerting Force, **AF** = Applied Force

Dimensions and technical information are subject to change without notice

Straight Line Action Clamps | Dimensions | -M/-SS/-MSS/-R/-MR

6015
6015-**M**



6015-**SS**,
6015-**MSS**
Stainless
Steel



6015-**R**,
6015-**MR**
with DESTACO®
Toggle Lock Plus™



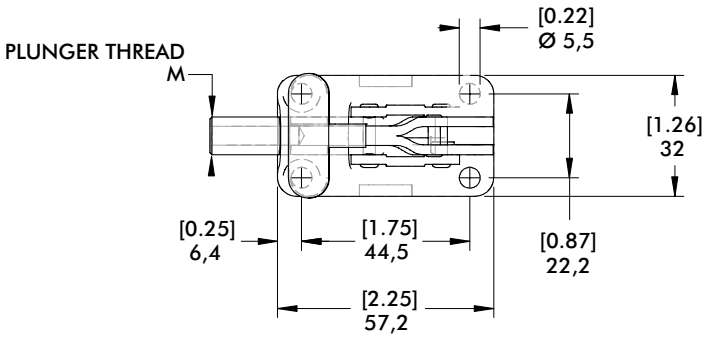

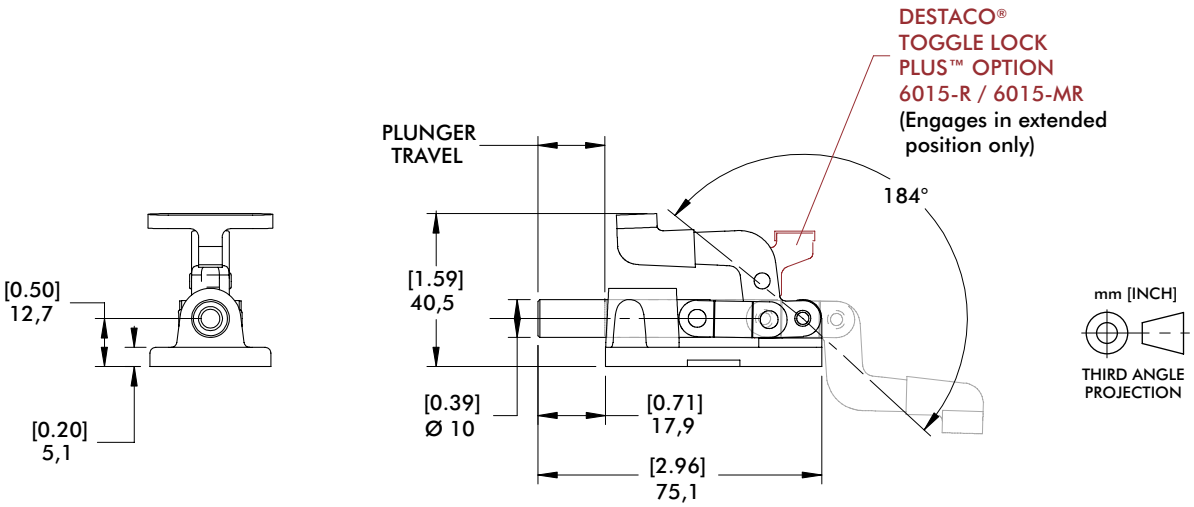

603, 608 SERIES

Straight Line Action Clamps | Product Overview

Features:
- Allow handle to rotate and fall below mounting plane to lock in retracted position
- Large holding capacities for their size
- Available with DESTACO® Toggle Lock Plus™
- 5 handle colors - see page MC-PRO-7 for details

Applications:
- Assembly & test
- Checking fixtures
- Welding fixtures
- Tensioning devices

Also Available:
See page MC-ACC-1 for accessories

803 Pneumatic Toggle Clamp
See page MC-PTC-23

803-ME Pneumatic Toggle Clamp
See page MC-PTC-23

Covered under one or more U.S./International Patents

603
603-**M**



603-**SS**
603-**MSS**
Stainless Steel



603-**R**
603-**MR**
with DESTACO® Toggle Lock Plus™



608
608-**M**



Color Handles
Available on models in this series.* Add **-Y**, **-G**, **-B**, **-K** to end of model number.

*Excludes Toggle Lock Plus levers.



Technical Information | Holding Capacities

Model	Max. Holding Capacity	Weight	EF:AF (pushing/ pulling)	Plunger Travel	(M) Plunger Thread	Recommended Spindle (Not Supplied)
603	[600 lbf] 2670 N	[0.83 lb] 0,38 kg	23:1/34:1	[1.25] 31,8	5/16-18	207203
603-M					M8	207203-M
603-SS	[840 lbf] 3740 N				5/16-18	207943
603-MSS					M8	207943-M (supplied)
603-R	[600 lbf] 2670 N				5/16-18	207203
603-MR					M8	207203-M
608	[850 lbf] 3780 N	[1.25 lb] 0,57 kg	44:1/50:1	[1.63] 41,3	3/8-16	210203
608-M					M10	210203-M

HC = Holding Capacity, **EF** = Exerting Force, **AF** = Applied Force

Straight Line Action Clamps | Dimensions | -M/-SS/-MSS/-R/-MR

603
603-**M**



603-**SS**
603-**MSS**
Stainless Steel



603-**R**
603-**MR**
with DESTACO® Toggle Lock Plus™



608
608-**M**



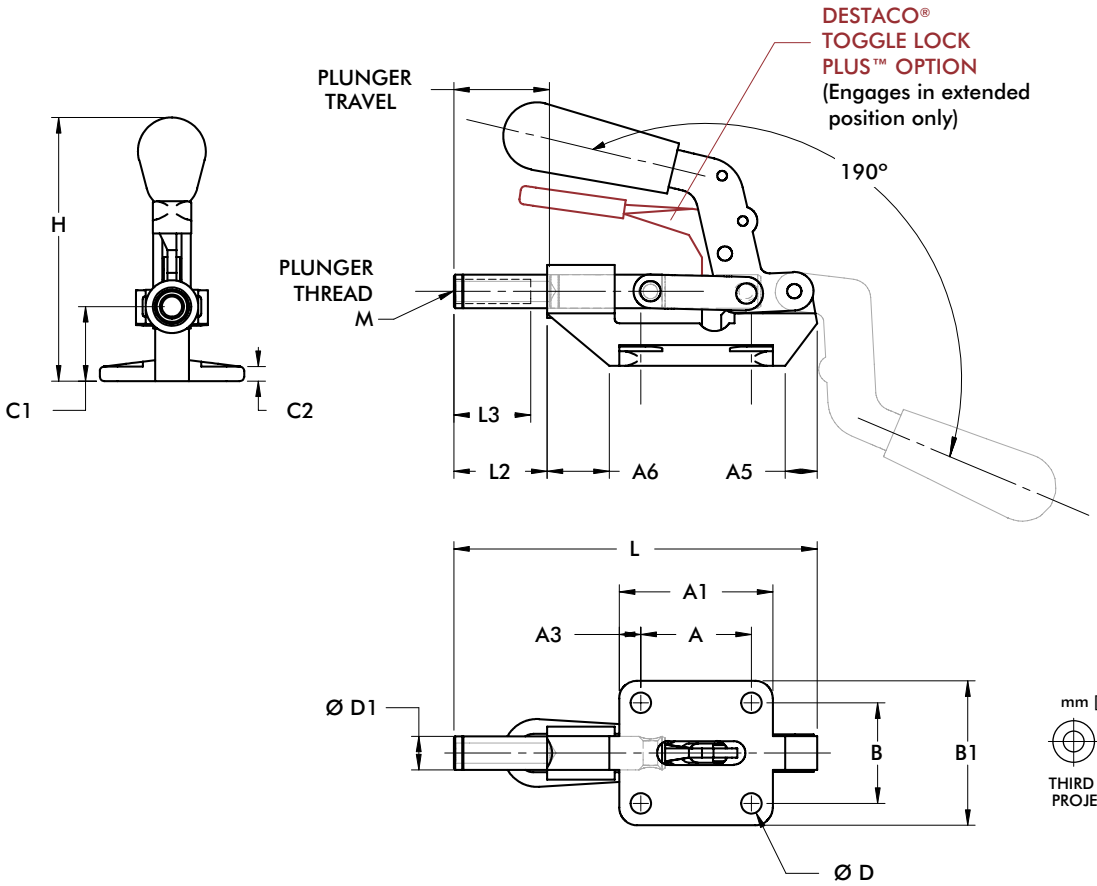

Model	A	A1	A3	A5	A6	B	B1	C1	C2	D	D1	H	L	L2	L3
603	[1.44] 36,6	[2.17] 55	[0.34] 8,5	[0.51] 13	[0.82] 21	[1.31] 33,3	[1.88] 48	[0.97] 24,6	[0.19] 4,8	[0.27] 6,8	[0.44] 11,1	[3.43] 87	[4.77] 121,2	[1.28] 32,5	[1.00] 25,4
603-M															
603-SS		[2.20] 55,9	[0.30] 7,5	[0.54] 13,6	[0.65] 16,5				[0.25] 6,4		[0.47] 12	[3.28] 83,4	[4.69] 119,2		
603-MSS															
603-R				[0.51] 13	[0.82] 21				[0.19] 4,8		[0.44] 11,1	[3.43] 87	[4.77] 121,2		
603-MR															
608	[1.63] 41,4	[2.25] 57,2	[0.31] 8	[0.75] 19	[1.40] 36	[1.63] 41,4	[2.25] 57,2	[1.25] 31,8		[0.33] 8,4	[0.62] 15,8	[4.04] 102,6	[6.00] 152,3	[1.59] 40,5	[1.25] 31,8
608-M															

605 SERIES

Straight Line Action Clamps | Product Overview

Features:
- For push/pull clamping
- Allow handle to rotate and fall below mounting plane to lock in retracted position
- 5 handle colors - see page MC-PRO-7 for details

Applications:
- Assembly & test
- Woodworking
- Tensioning devices

Also Available:
See page MC-ACC-1 for accessories

Reverse action version Model 615/615-M

605
605-**M**



Color Handles
Available on this model.
Add **-Y**, **-G**, **-B**, **-K** to end of model number.



Technical Information | Holding Capacities | Dimensions

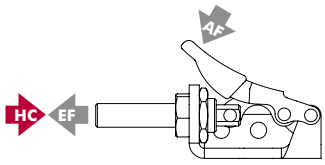

Model	Max. Holding Capacity	Weight	EF:AF (pushing/ pulling)	Plunger Travel	(M) Plunger Thread	Recommended Spindle (Not Supplied)
605	[300 lbf] 1330 N	[0.69 lb] 0,31 kg	45:1/40:1	[1.25] 31,8	5/16-18	207203
605-M					M8	207203-M

HC = Holding Capacity, **EF** = Exerting Force, **AF** = Applied Force

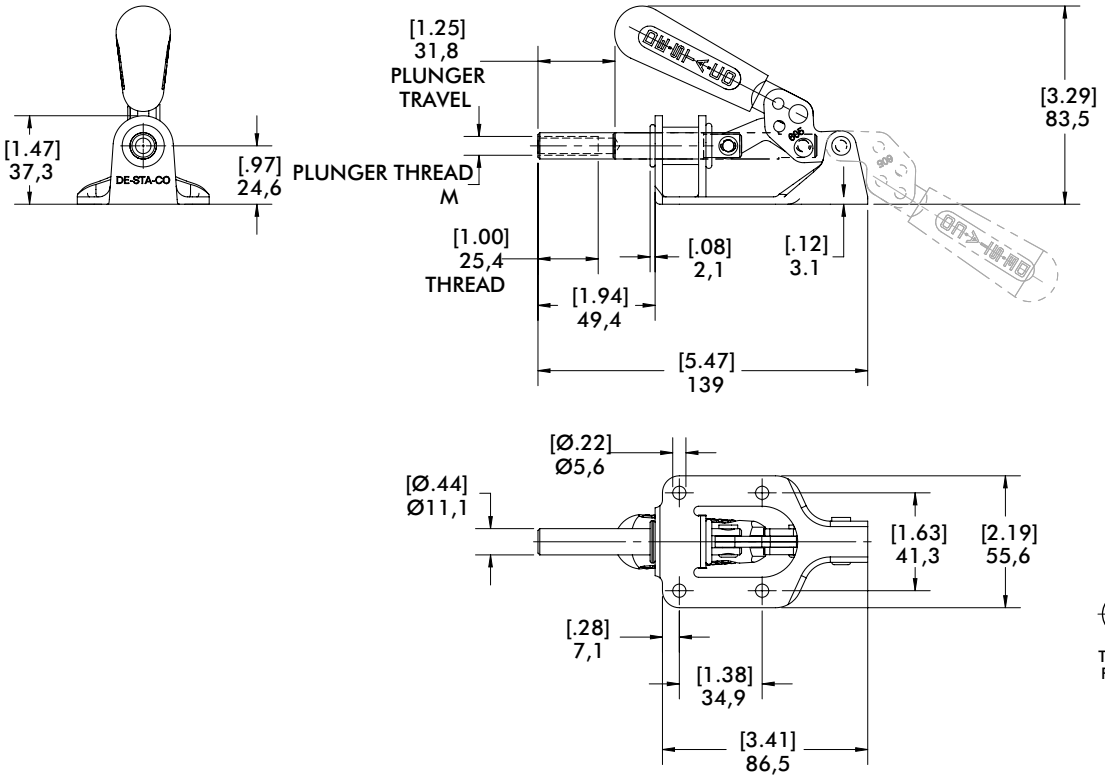

Dimensions and technical information are subject to change without notice

606 SERIES

Straight Line Action Clamps | Product Overview

Features:
- Handle and linkage swivel 125° for mounting flexibility
- Narrow base for tight spaces
- Plunger locks in extended position only

Applications:
- Assembly & test
- Woodworking
- Tensioning devices

Also Available:
See page MC-ACC-1 for accessories

606
606-**M**



Mounting configuration:



Bottom Mount



Side Mount

Technical Information | Holding Capacities | Dimensions

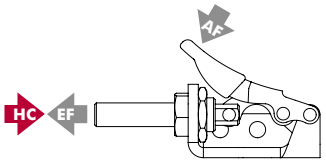

Model	Max. Holding Capacity	Weight	EF:AF (pushing)	Plunger Travel	(M) Plunger Thread	Recommended Spindle (Not Supplied)
606	[450 lbf] 2000 N	[0.81 lb] 0,37 kg	33:1	[1.57] 40	5/16-18	207203
606-M					M8	207203-M

HC = Holding Capacity, **EF** = Exerting Force, **AF** = Applied Force

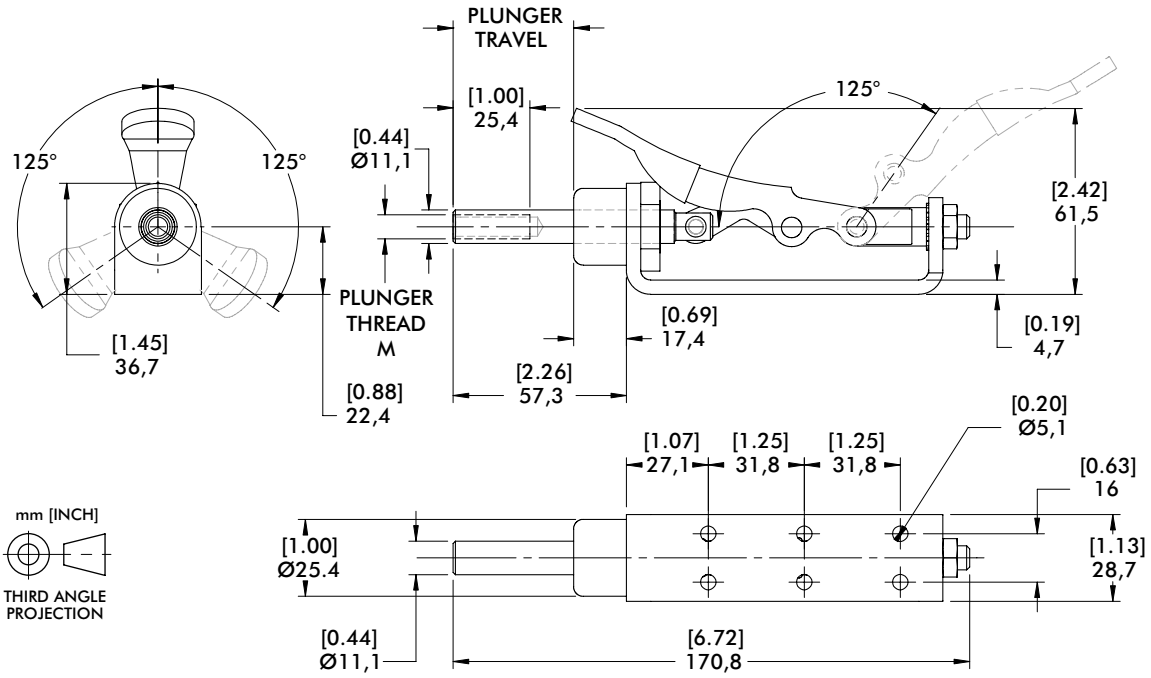

607 SERIES

Straight Line Action Clamps | Product Overview

Features:
- Low profile and high holding capacity for its size
- Available with round or square plunger to resist torsional loads
- Allow handle to rotate and fall below mounting plane to lock in retracted position
- 5 handle colors - see page MC-PRO-7 for details

Applications:
- Assembly & test
- Welding
- Tensioning devices

Also Available:
See page MC-ACC-1 for accessories

607
607-**M**



607-**SQ**
607-**SQM**
with Square Plunger



Color Handles
Available on models in this series. Add **-Y**, **-G**, **-B**, **-K** to end of model number.



Technical Information | Holding Capacities | Dimensions

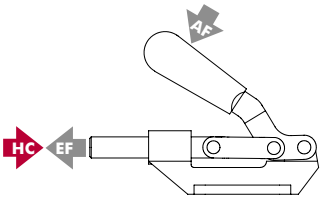

Model	Max. Holding Capacity	Weight	EF:AF (pushing/ pulling)	Plunger Travel	(M) Plunger Thread	Recommended Spindle (Not Supplied)
607	[800 lbf] 3560 N	[1.63 lb] 0,74 kg	37:1/64:1	[1.63] 41,4	5/16-18	207203
607-M					M8	207203-M
607-SQ					5/16-18	207203
607-SQM					M8	207203-M

HC = Holding Capacity, **EF** = Exerting Force, **AF** = Applied Force

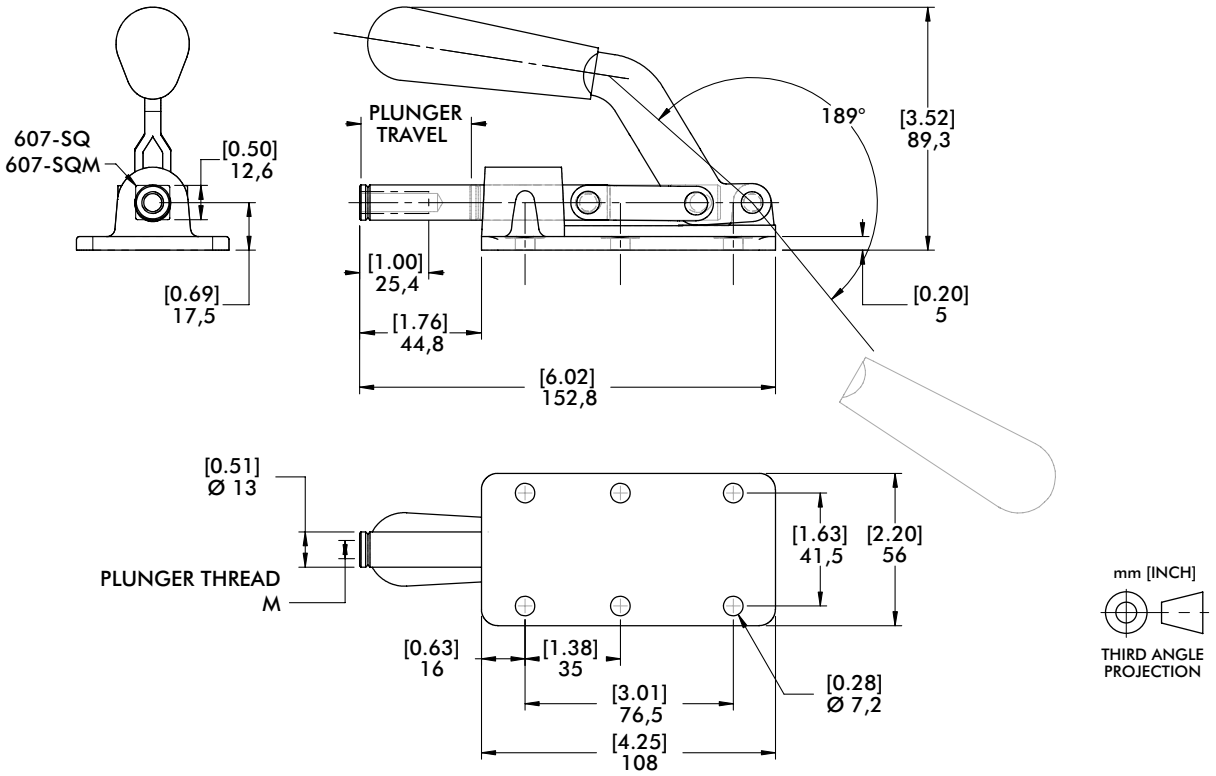

Dimensions and technical information are subject to change without notice

609 SERIES

Straight Line Action Clamps | Product Overview

Features:
- Low profile and high holding capacity for its size
- Flanged or straight base
- Allow handle to rotate and fall below mounting plane to lock in retracted position
- 5 handle colors - see page MC-PRO-7 for details

Applications:
- Assembly & test
- Welding
- Tensioning devices

Also Available:
See page MC-ACC-1 for accessories

609
Flanged Base



609-**B**
Straight Base



Color Handles
Available on models in this series. Add **-Y**, **-G**, **-B**, **-K** to end of model number.



Technical Information | Holding Capacities | Dimensions

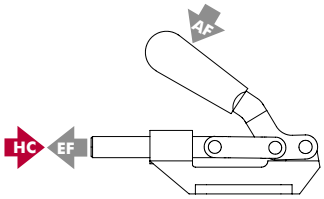

Model	Max. Holding Capacity	Weight	EF:AF (pushing/ pulling)	Plunger Travel	(M) Plunger Thread	Recommended Spindle (Not Supplied)
609	[300 lbf] 1330 N	[0.88 lb] 0,40 kg	36:1/47:1	[1.25] 31,8	5/16-18	207203
609-B						

HC = Holding Capacity, **EF** = Exerting Force, **AF** = Applied Force

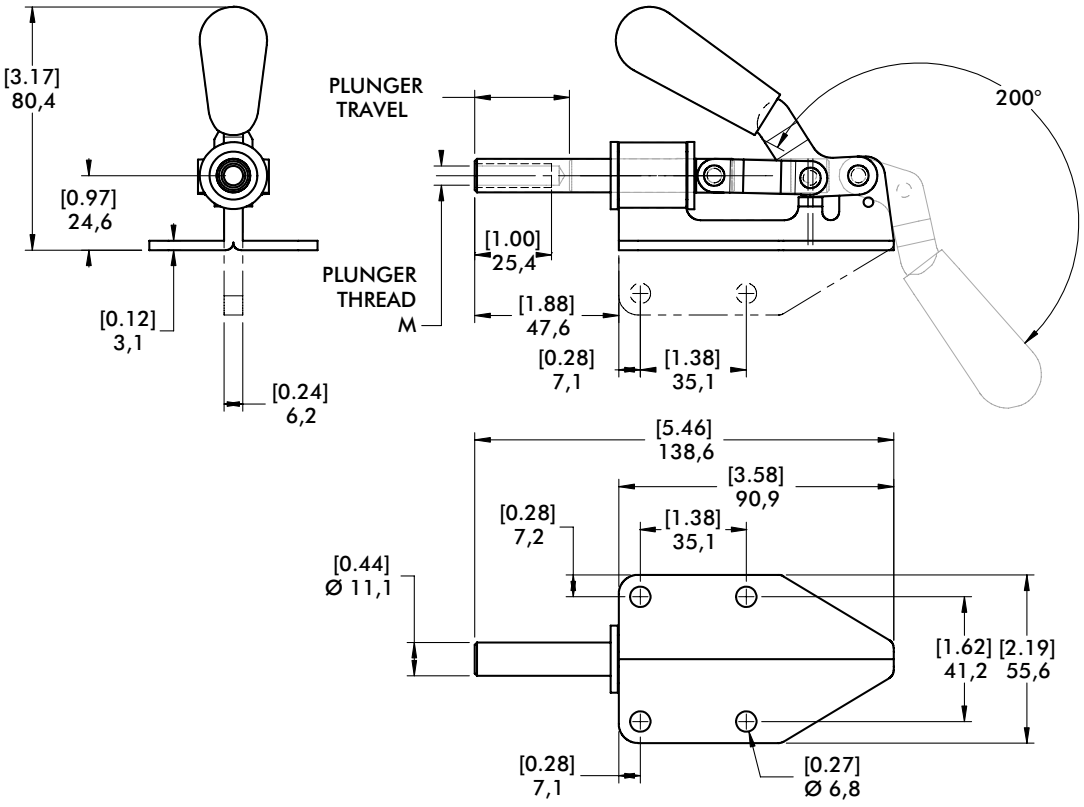

610 SERIES

Straight Line Action Clamps | Product Overview

Features:
- For push/pull clamping
- Allow handle to rotate and fall below mounting plane to lock in retracted position

Applications:
- Assembly & test
- Woodworking
- Tensioning devices

Also Available:
See page MC-ACC-1 for accessories

610
610-**M**



Technical Information | Holding Capacities | Dimensions

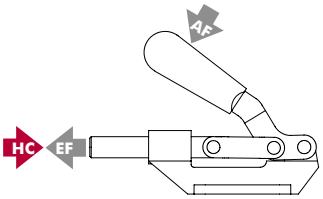

Model	Max. Holding Capacity	Weight	EF:AF (pushing/ pulling)	Plunger Travel	(M) Plunger Thread	Recommended Spindle (Not Supplied)
610	[800 lbf] 3560 N	[1.69 lb] 0,77 kg	51:1/70:1	[1.63] 41,4	3/8-16	210203
610-M					M10	210203-M

HC = Holding Capacity, **EF** = Exerting Force, **AF** = Applied Force

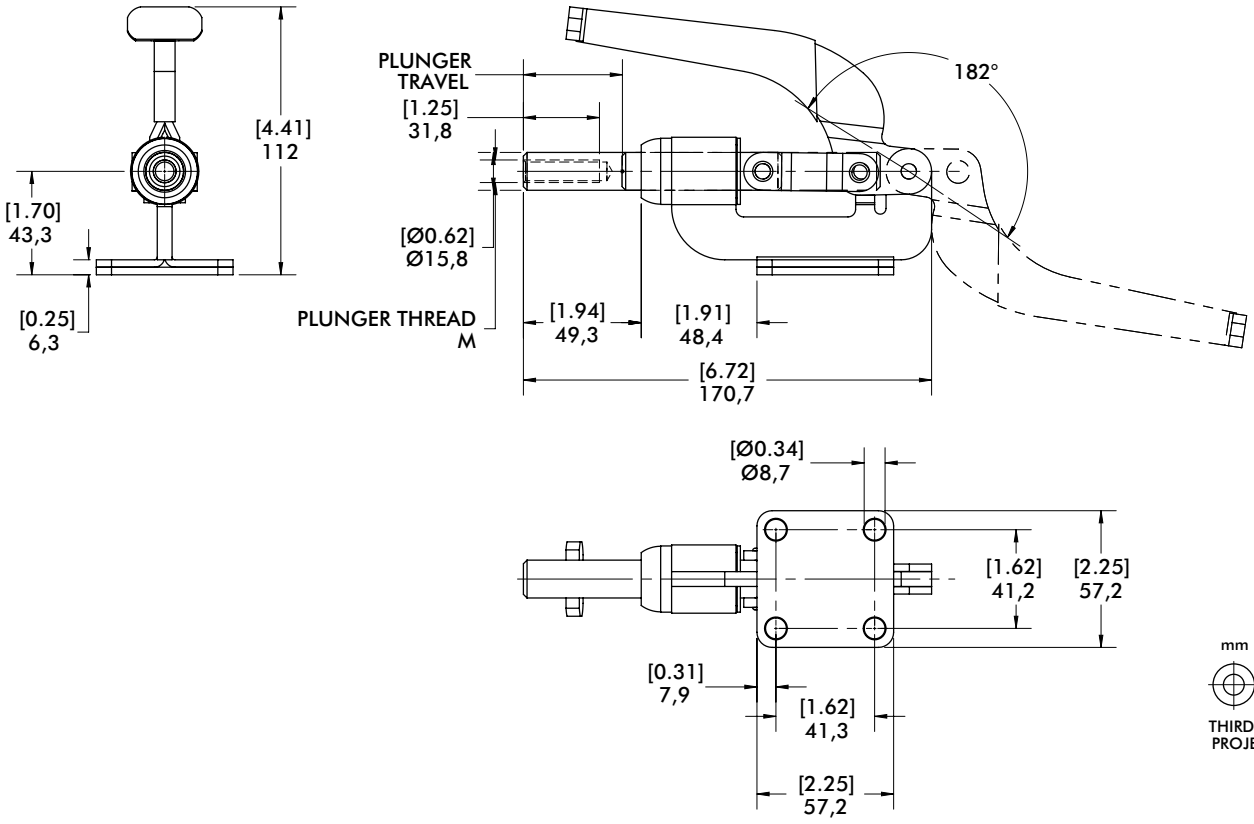

Dimensions and technical information are subject to change without notice

615 SERIES

Straight Line Action Clamps | Product Overview

Features:
- Reverse handle action.
- Plunger locks in the extended position only as the handle is moved downward
- 5 handle colors - see page MC-PRO-7 for details

Applications:
- Assembly & test
- Woodworking
- Tensioning devices

Also Available:
See page MC-ACC-1 for accessories

615



Color Handles
Available on this model.
Add **-Y**, **-G**, **-B**, **-K** to end of model number.



Technical Information | Holding Capacities | Dimensions

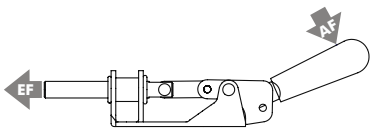

Model	Max. Holding Capacity	Weight	EF:AF (pushing)	Plunger Travel	(M) Plunger Thread	Recommended Spindle (Not Supplied)
615	[300 lbf] 1330 N	[0.69 lb] 0,31 kg	25:1	[1.00] 25,4	5/16-18	207203

HC = Holding Capacity, **EF** = Exerting Force, **AF** = Applied Force

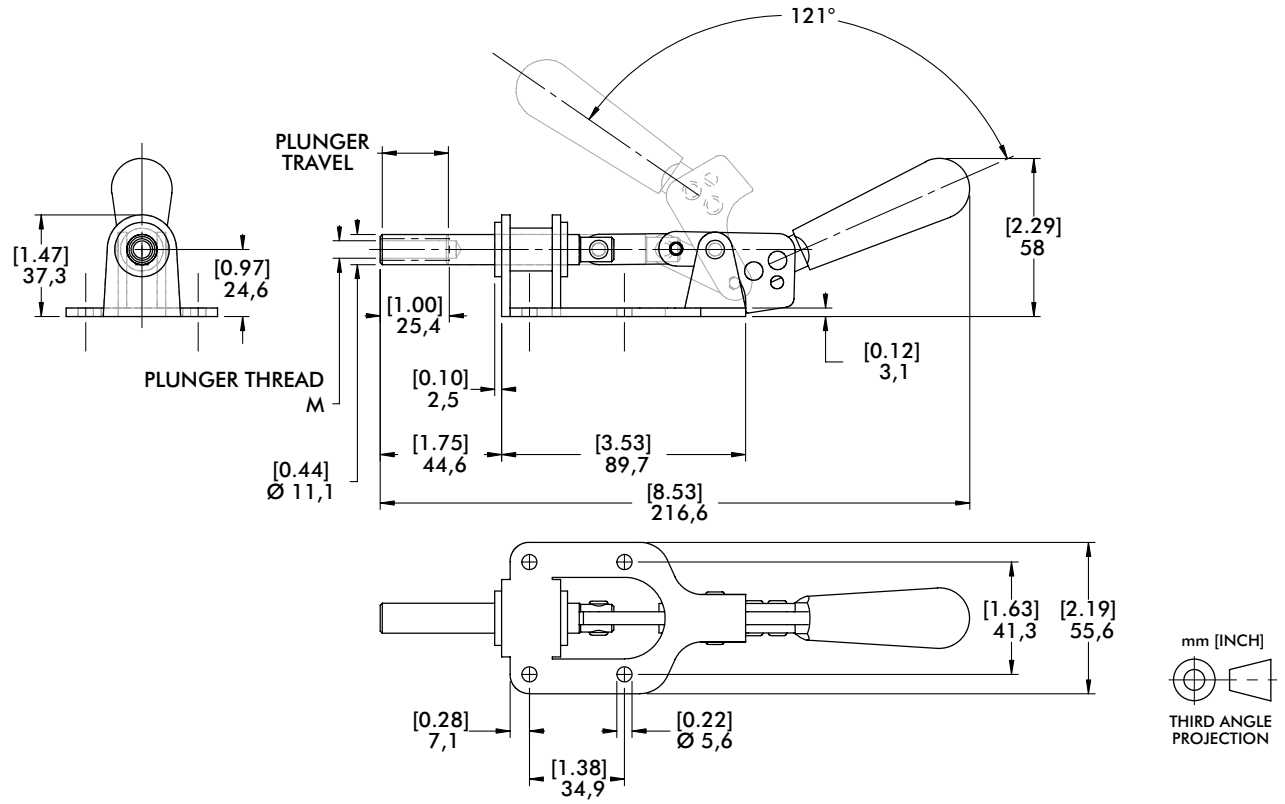

620 SERIES

Straight Line Action Clamps | Product Overview

Features:
- Reverse handle action
- Plunger locks in the extended position only as the handle is moved downward
- 5 handle colors - see page MC-PRO-7 for details

Applications:
- Assembly & test
- Woodworking
- Tensioning devices

Also Available:
See page MC-ACC-1 for accessories

620
620-**M**



Color Handles
Available on this model.
Add **-Y**, **-G**, **-B**, **-K** to end of model number.



Technical Information | Holding Capacities | Dimensions

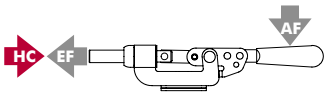

Model	Max. Holding Capacity	Weight	EF:AF (pushing)	Plunger Travel	(M) Plunger Thread	Recommended Spindle (Not Supplied)
620	[600 lbf] 2670 N	[1.50 lb] 0,68 kg	44:1	[1.11] 28,2	3/8-16	210203
620-M					M10	210203-M

HC = Holding Capacity, **EF** = Exerting Force, **AF** = Applied Force

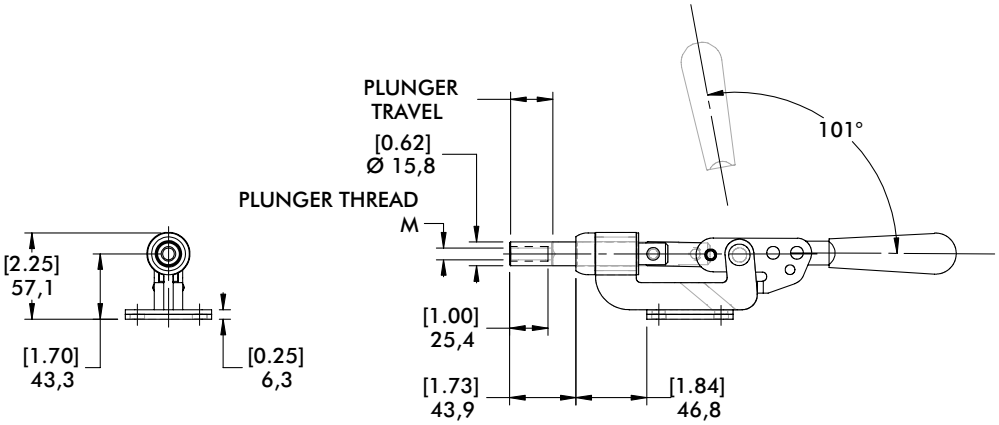

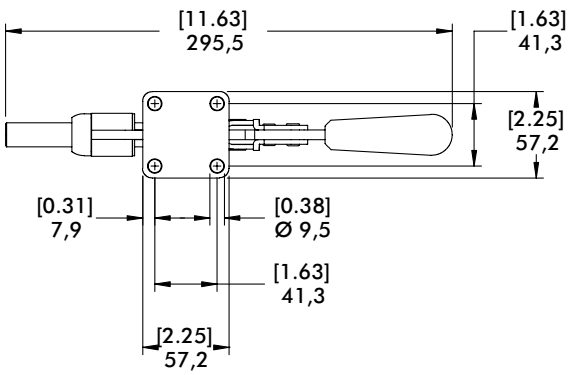

mm [INCH]
THIRD ANGLE PROJECTION

Dimensions and technical information are subject to change without notice

630 SERIES

Straight Line Action Clamps | Product Overview

Features:
- For push/pull clamping
- Allow handle to rotate and fall below mounting plane to lock in retracted position
- Available in stainless steel
- Available with DESTACO® Toggle Lock Plus™
- 5 handle colors - see page MC-PRO-7 for details

Applications:
- Assembly & test
- Welding
- Tensioning devices

Also Available:
See page MC-ACC-1 for accessories

830, 830-ME Pneumatic Toggle Clamp (See page MC-PTC-25)

630
630-M



630-SS
630-MSS
Stainless Steel



630-R
630-MR
with DESTACO® Toggle Lock Plus™



630-RSS
630-MRSS
Stainless Steel
with DESTACO® Toggle Lock Plus™



Technical Information | Holding Capacities | Dimensions

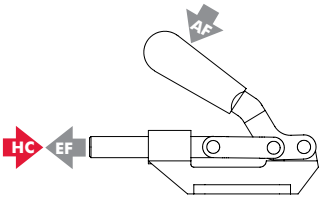

Model	Max. Holding Capacity	Weight	EF:AF (pushing/ pulling)	Plunger Travel	(M) Plunger Thread	Recommended Spindle (Not Supplied)
630	[2500 lbf] 11100 N	[1.90 lb] 0,89 kg	36:1/23:1	[2.00] 50,8	3/8-16	210203
630-SS						237943
630-M					M10	210203-M
630-MSS						237943-M
630-R					3/8-16	210203
630-RSS						237943
630-MR					M10	210203-M
630-MRSS						237943-M

HC = Holding Capacity, **EF** = Exerting Force, **AF** = Applied Force



Color Handles
Available on models in this series.* Add **-Y, -G, -B, -K** to end of model number.

*Excludes Toggle Lock Plus levers or dipped handles.

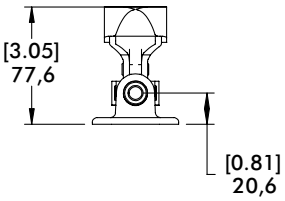

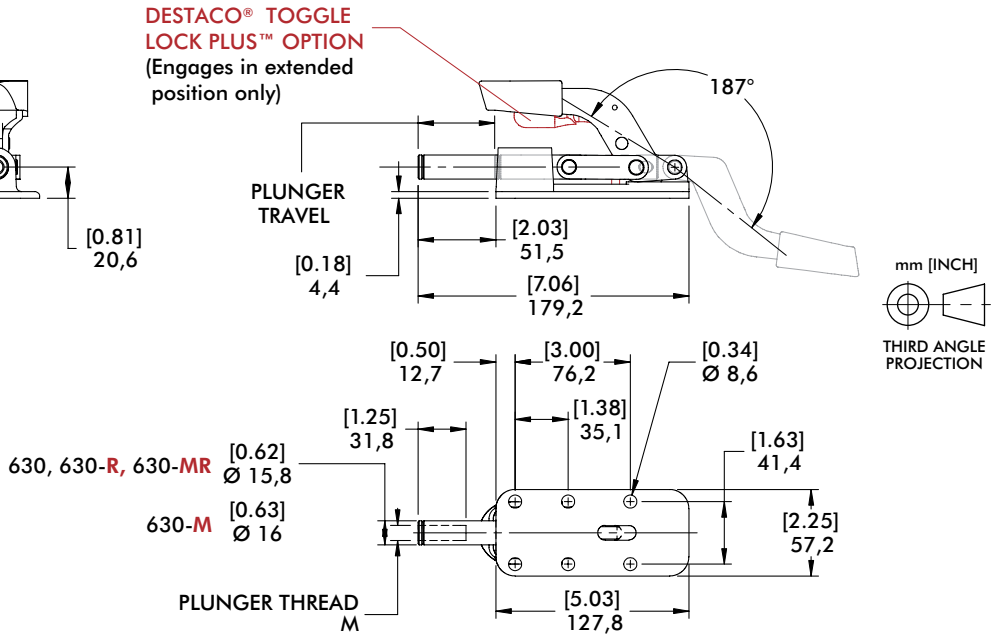

640 SERIES

Straight Line Action Clamps | Product Overview

Features:
- For heavy duty push/pull clamping
- Longest stroke of our Straight Line Action Clamps
- Allow handle to rotate and fall below mounting plane to lock in retracted position
- Available with DESTACO® Toggle Lock Plus™
- 5 handle colors - see page MC-PRO-7 for details

Applications:
- Assembly & test
- Welding
- Tensioning devices

Also Available:
See page MC-ACC-1 for accessories

640
640-**M**



640-**R**
640-**MR**
with
DESTACO®
Toggle Lock
Plus™



Color Handles
Available on models in this series.* Add **-Y**, **-G**, **-B**, **-K** to end of model number.

*Excludes Toggle Lock Plus levers.



Technical Information | Holding Capacities | Dimensions

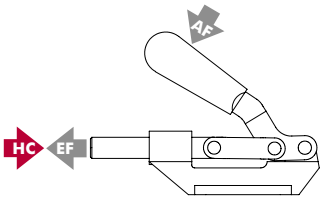

Model	Max. Holding Capacity	Weight	EF:AF (pushing)	Plunger Travel	(M) Plunger Thread	Recommended Spindle (Not Supplied)
640	[7500 lbf] 33400 N	[6.78 lb] 3,08 kg	35:1	[4.00] 101,6	1/2-13	220203
640-M					M12	220203-M
640-R					1/2-13	220203
640-MR					M12	220203-M

HC = Holding Capacity, **EF** = Exerting Force, **AF** = Applied Force

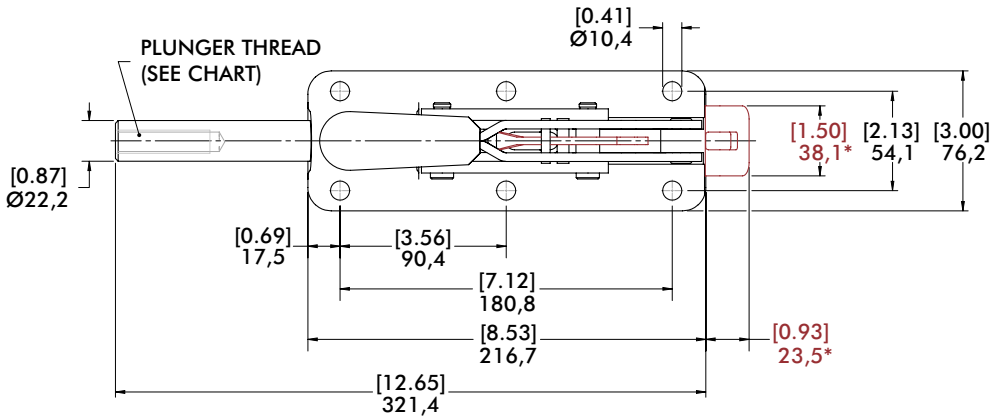



Extended (640-**R** shown)



Retracted (640-**R** shown)

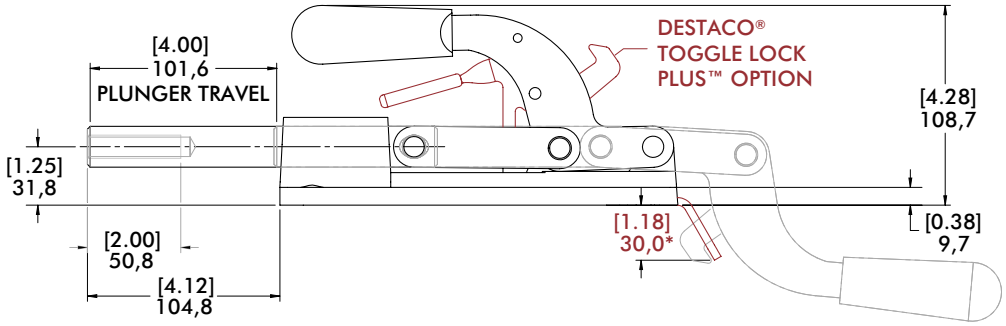

mm [INCH]

THIRD ANGLE PROJECTION

(*) Dimesions above in **RED** applies to the **640-R**/**640-MR** only

650 SERIES

Straight Line Action Clamps | Product Overview

Features:
- For heavy duty push/pull clamping
- Largest of our Straight Line Action Clamps
- Forged steel base and handle
- Allow handle to rotate and fall below mounting plane to lock in retracted position

Applications:
- Assembly
- Welding
- Staking, light presswork
- Tensioning devices

Also Available:
See page MC-ACC-1 for accessories

650
650-**M**



Technical Information | Holding Capacities | Dimensions

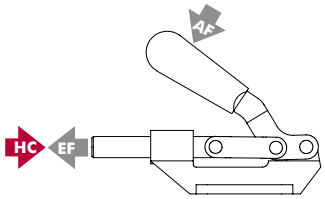

Model	Max. Holding Capacity	Weight	EF:AF (pushing)	Plunger Travel	(M) Plunger Thread	Recommended Spindle (Not Supplied)
650	[16000 lbf] 71200 N	[5.69 lb] 2,58 kg	25:1	[3.00] 76,6	5/8-11	250203
650-M					M16	250203-M

HC = Holding Capacity, **EF** = Exerting Force, **AF** = Applied Force

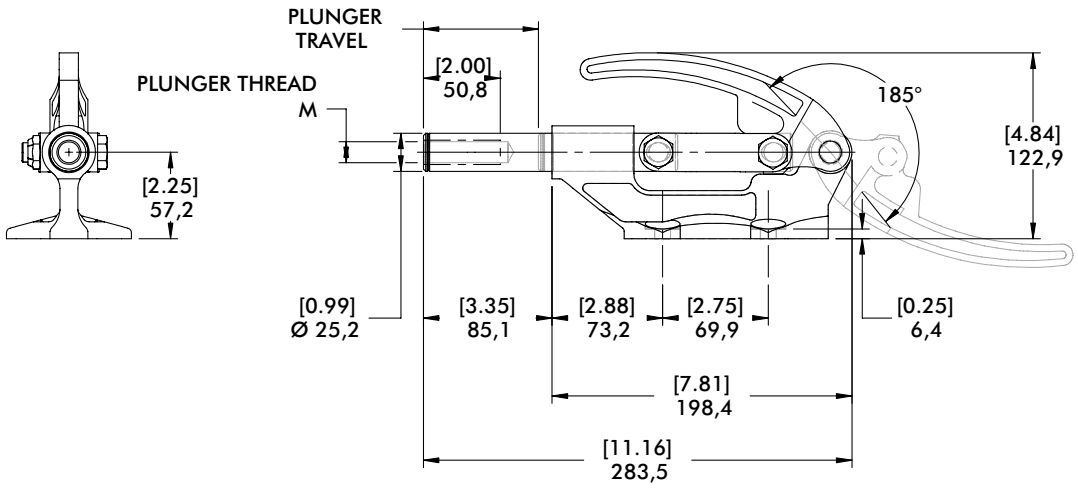

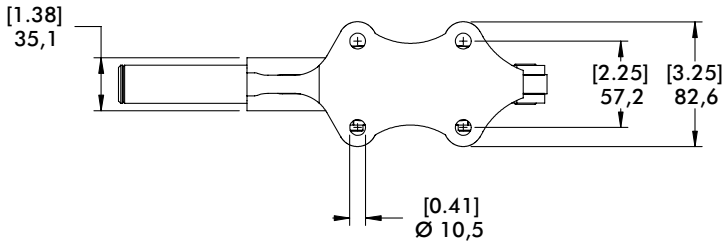

mm [INCH]
THIRD ANGLE PROJECTION

95030, 95040, 95050, 95060 SERIES

Straight Line Action Clamps | Product Overview

Features:
- Low profile with high holding capacities
- Cast steel base and handle
- Allow handle to rotate and fall below mounting plane to lock in retracted position

Applications:
- Assembly
- Testing
- Tensioning devices

Also Available:
See page MC-ACC-1 for accessories

95030



95040



95050ⓘ



95060ⓘ



Technical Information | Holding Capacities

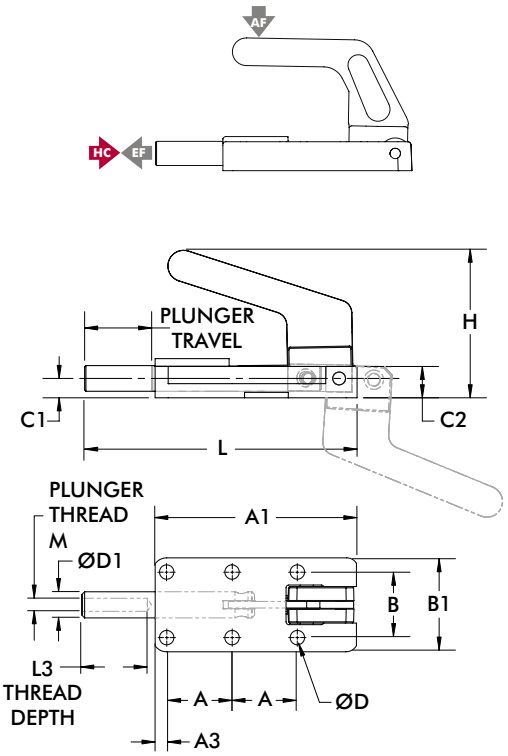

Model	Max. Holding Capacity	Weight	EF:AF (pushing)	Plunger Travel	(M) Plunger Thread	Recommended Spindle (Not Supplied)
95030	[550 lbf] 2450 N	[0.80 lb] 2,58 kg	15:1	[0.98] 24,9	M6	205203-M
95040	[1100 lbf] 4900 N	[1.60 lb] 0,73 kg	12:1	[1.50] 38,1	M8	207203-M
95050ⓘ	[1650 lbf] 7340 N	[2.10 lb] 0,95 kg	15:1	[1.97] 50	M12	220203-M
95060ⓘ	[3960 lbf] 17600 N	[6.4 lb] 2,9 kg	15:1	[2.36] 60		

ⓘ This item is available upon request
HC = Holding Capacity, **EF** = Exerting Force, **AF** = Applied Force

mm [INCH]
THIRD ANGLE PROJECTION

Part No.	A	A1	A3	B	B1	C1	C2	ØD	ØD1	H	L	L3*
95030	[0.98] 25	[3.03] 77	[0.17] 4,4	[0.98] 25	[1.41] 35,9	[0.30] 7,5	[0.48] 12,2	[0.22] 5,5	[0.39] 10	[2.11] 53,7	[4.13] 105	[0.98] 25
95040	[1.38] 35	[4.29] 109	[0.31] 7,9	[1.38] 35	[2.00] 50,7	[0.39] 10	[0.72] 18,3	[0.26] 6,5	[0.55] 14	[3.03] 77	[5.87] 149,1	[1.38] 35
95050ⓘ	[1.77] 45	[5.45] 138,5	[0.34] 8,7	[1.77] 45	[2.60] 66	[0.55] 14	[0.94] 23,8	[0.33] 8,5	[0.75] 19	[3.02] 76,7	[7.47] 189,8	[2.17] 55
95060ⓘ	[2.17] 55	[6.57] 167	[0.40] 10,2	[2.17] 55	[3.03] 77	[0.63] 16	[1.08] 27,4	[0.41] 10,5	[0.87] 22	[3.69] 93,8	[9.02] 229	[2.56] 65

ⓘ This item is available upon request

*Minimum

Dimensions and technical information are subject to change without notice

Notes

5130, 5131, 5133 SERIES

Heavy-Duty Straight Line Action Clamps | Product Overview

Features:

- Reverse action allows the handle to stay out of the work zone
- Hardened steel pivot pins and bushings provide long life
- Black oxide finish with hardened plungers
- DESTACO® Toggle Lock Plus™ versions available

Applications:

- Welding fixtures
- Assembly fixtures
- Light machining

5130/-**M**
5131/-**M**
5133/-**M**
Flanged Base



5130-**B**/-**MB**
5131-**B**/-**MB**
5133-**B**/-**MB**
Solid Base



5130-**R**/-**MR**
5131-**R**/-**MR**
5133-**R**/-**MR**
Flanged Base
with DESTACO®
Toggle Lock Plus™



5130-**BR**ⓘ/-**MBR**ⓘ
5131-**BR**ⓘ/-**MBR**ⓘ
5133-**BR**ⓘ/-**MBR**ⓘ
Solid Base
with DESTACO®
Toggle Lock Plus™



Technical Information

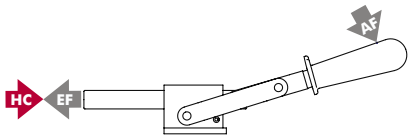

Model	Max. Holding Capacity	Weight	EF:AF (pushing)	Plunger Travel mm [in]	Handle Opening	Plunger Thread (M)	Recommended Spindle (not supplied)
5131	[2500 lbf] 11120 N	[1.12lbs] 0,51 kg	40:1	[1.00] 25,4	113°	5/16-18	461203
5131-M						M8	461203-M
5131-B		[0.85lbs] 0,39 kg				5/16-18	461203
5131-MB						M8	461203-M
5131-R		[1.15lbs] 0,52 kg				5/16-18	461203
5131-MR						M8	461203-M
5131-BRⓘ		[0.88lbs] 0,40 kg				5/16-18	461203
5131-MBRⓘ						M8	461203-M
5130	[5800 lbf] 25800 N	[2.87lbs] 1,30 kg	40:1	[1.75] 44,5	125°	1/2-13	325203
5130-M						M12	220203-M
5130-B		[2.40lbs] 1,09 kg				1/2-13	325203
5130-MB						M12	220203-M
5130-R		[3.03lbs] 1,37 kg				1/2-13	325203
5130-MR						M12	220203-M
5130-BRⓘ		[2.56lbs] 1,16 kg				1/2-13	325203
5130-MBRⓘ						M12	220203-M
5133	[4600 lbf] 20460 N	[3.12lbs] 1,41 kg	40:1	[3.18] 80,7	139°	1/2-13	325203
5133-M						M12	220203-M
5133-B		[2.65lbs] 1,20 kg				1/2-13	325203
5133-MB						M12	220203-M
5133-R		[3.36lbs] 1,52 kg				1/2-13	325203
5133-MR						M12	220203-M
5133-BRⓘ		[2.89lbs] 1,31 kg				1/2-13	325203
5133-MBRⓘ						M12	220203-M

ⓘ This item is available upon request **HC** = Holding Capacity, **EF** = Exerting Force, **AF** = Applied Force

Dimensions and technical information are subject to change without notice

5130, 5131, 5133 SERIES

Heavy-Duty Straight Line Action Clamps | Dimensions

mm [INCH]

THIRD ANGLE PROJECTION

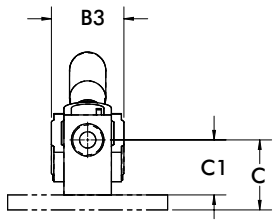

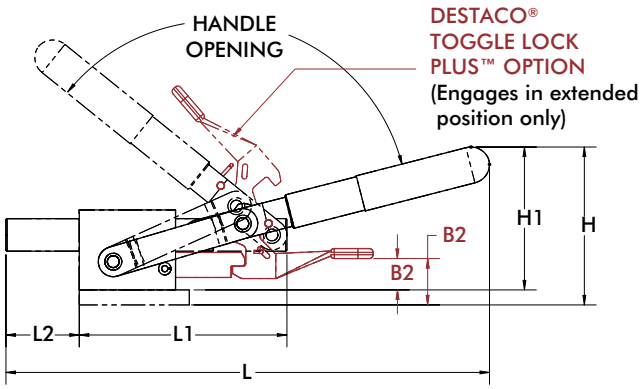



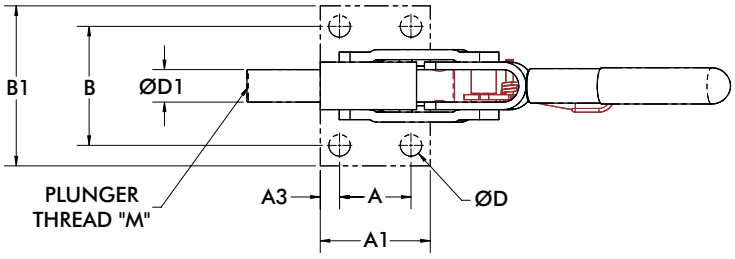

Model	A	A1	A3	B	B1	B2	B3	C	D	D1	H	L	L1	L2
5131						-								
5131-M	[1.13] 28,6	[1.73] 44	[0.30] 7,7	[1.87] 47,6	[2.52] 64		[1.14] 29	[1.10] 28	[0.34] 8,6	[0.51] 13	[2.49] 63,1	[7.61] 193,4	[3.27] 83	[1.15] 29,3
5131-R						[0.73] 18,5								
5131-MR														
5130						-								
5130-M							[1.57] 40				[3.63] 92,3	[11.14] 283	[5.20] 132	[1.96] 49,7
5130-R						[1.07] 27,2								
5130-MR	[1.75] 44,5	[2.52] 64	[0.38] 9,8	[2.31] 58,7	[2.99] 76			[1.38] 35	[0.41] 10,5	[0.75] 19				
5133						-								
5133-M							[1.54] 39				[3.84] 97,5	[13.05] 331,4	[6.58] 167	[3.24] 82,2
5133-R						[1.24] 31,4								
5133-MR														

Model	B2	B3	C1	D1	H1
5131-B	-	[1.14] 29	[0.87] 22	[0.51] 13	[2.25] 57,1
5131-MB					
5131-BR ⓘ	[0.49] 12,4				
5131-MBR ⓘ					
5130-B	-	[1.57] 40	[1.14] 29	[0.75] 19	[3.40] 86,3
5130-MB					
5130-BR ⓘ	[0.84] 21,2				
5130-MBR ⓘ					
5133-B	-	[1.54] 39			[3.60] 91,5
5133-MB					
5133-BR ⓘ	[1.00] 25,4				
5133-MBR ⓘ					

ⓘ This item is available upon request

5150 SERIES

Heavy-Duty Straight Line Action Clamps | Product Overview

Features:
- Square plunger provides positive radial location
- Reverse action allows the handle to stay out of the work zone
- Hardened steel pivot pins and bushings provide long life
- Black oxide finish with hardened plungers

Applications:
- Welding fixtures
- Assembly fixtures
- Light machining

5150/5150-**M**
Flanged Base



5150-**B**/5150-**MB**
Solid
Base



5150-**R**/5150-**MR**
Flanged Base
with
DESTACO®
Toggle Lock
Plus™



5150-**BR**ⓘ/5150-**MBR**ⓘ
Solid Base
with
DESTACO®
Toggle Lock
Plus™



Technical Information

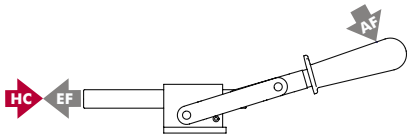

Model	Max. Holding Capacity	Weight	EF:AF (pushing)	Plunger Travel mm [in]	Handle Opening	Plunger Thread (M)	Recommended Spindle (not supplied)
5150	[5800 lbf] 25800 N	[3.00lbs] 1,36 kg	40:1	[1.91] 48,4	125°	1/2-13	325203
5150-M						M12	220203-M
5150-B		[2.50lbs] 1,13 kg				1/2-13	325203
5150-MB						M12	220203-M
5150-R		[3.15lbs] 1,43 kg				1/2-13	325203
5150-MR						M12	220203-M
5150-BRⓘ		[2.68lbs] 1,22 kg				1/2-13	325203
5150-MBRⓘ						M12	220203-M

ⓘ This item is available upon request **HC** = Holding Capacity, **EF** = Exerting Force, **AF** = Applied Force

Dimensions and technical information are subject to change without notice

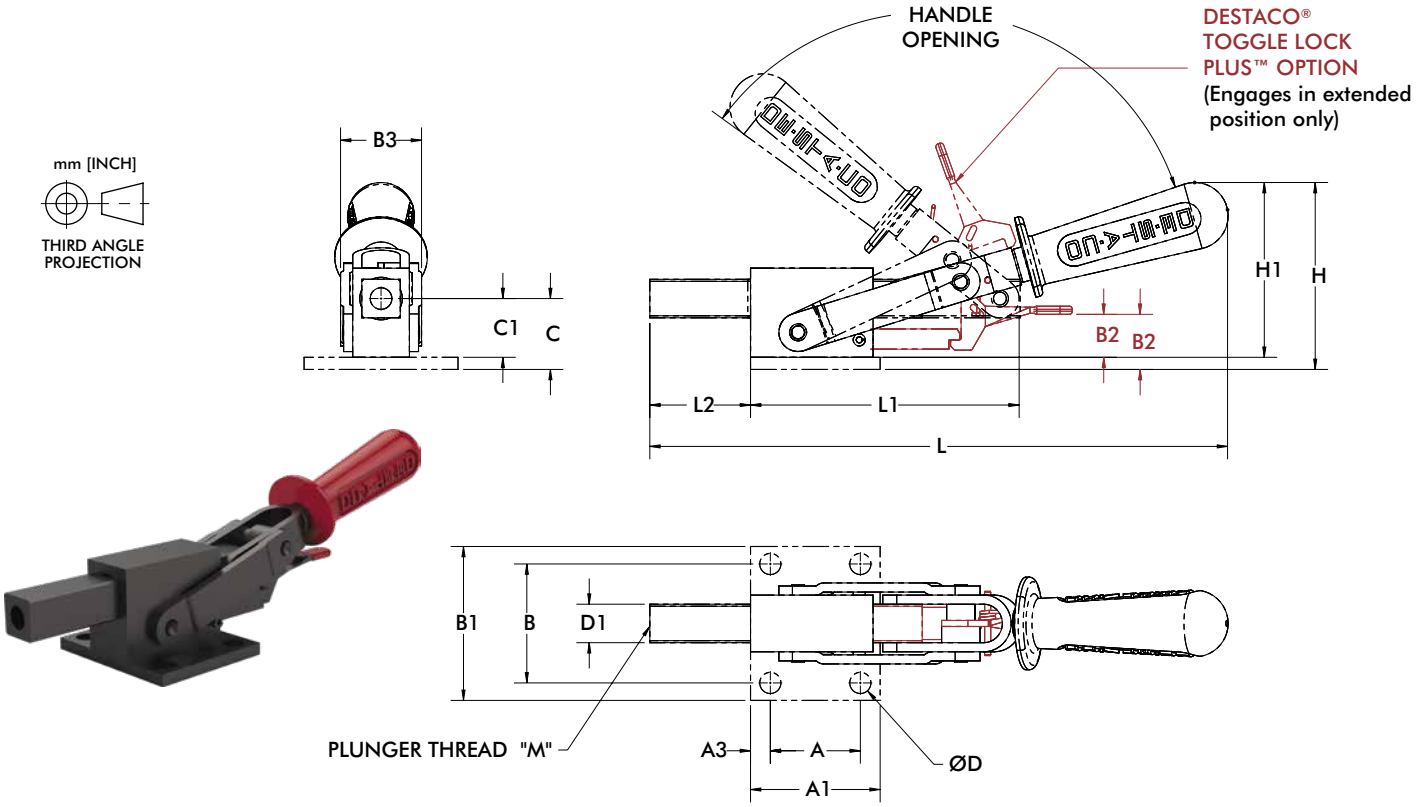

Model	A	A1	A3	B	B1	B2	B3	C	C1	D	D1
5150	[1.75] 44,5	[2.52] 64	[0.38] 9,8	[2.31] 58,7	[2.99] 76	-	[1.57] 40	[1.57] 35	-	[0.41] 10,5	[0.75] 19
5150-M											
5150-B	-	-	-	-	-			-	[1.14] 29	-	
5150-MB											
5150-R	[1.75] 44,5	[2.52] 64	[0.38] 9,8	[2.31] 58,7	[2.99] 76	[1.07] 27,2		[1.57] 35	-	[0.41] 10,5	
5150-MR											
5150-BR	-	-	-	-	-	[0.84] 21,2		-	[1.14] 29	-	
5150-MBR											

Model	H	H1	L	L1	L2	M
5150	[3.63] 92,3	-	[11.23] 285,3	[2.86] 72,6	[1.96] 49,7	1/2-13
5150-M						M12
5150-B	-	[3.40] 86,3				1/2-13
5150-MB						M12
5150-R	[3.63] 92,3	-				1/2-13
5150-MR						M12
5150-BR ⓘ	-	[3.40] 86,3				1/2-13
5150-MBR ⓘ						M12

ⓘ This item is available upon request

602, 604, 624 SERIES

Straight Line Action Clamps | Product Overview

Features:
- Versatile and compact straight line action clamps
- Threaded body for through hole mounting
- -SS models are stainless steel
- Toggle Lock Plus™ versions available (604, 624 only)
- 5 handle colors - see page MC-PRO-7 for details

Applications:
- Assembly
- Checking fixtures
- Welding fixtures
- Tensioning devices

Also Available:
See page MC-ACC-1 for accessories

602
602-**SS**
602-**MM**
602-**MMSS**



604
604-**SS**
604-**R**
604-**RSS**
604-**MM**
604-**MMSS**ⓘ
604-**MMR**
604-**MMRSS**



624
624-**SS**
624-**R**
624-**RSS**
624-**MM**
624-**MMR**
624-**MMRSS**





Color Handles
Available on models in this series. Add **-Y**, **-G**, **-B**, **-K** to end of model number.

Technical Information | Holding Capacities | Dimensions

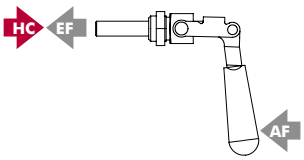

Model	Max. Holding Capacity	Weight	EF:AF (pushing/ pulling)	Plunger Travel	Plunger Thread	Spindle (Recom-mended)	Mounting Nut (Supplied)
602	[200 lbf] 900 N	[0.12 lb] 0,05 kg	31:1/28:1	[0.75] 19	1/4-20	205203	602105
602-SS						202943	602905
602-MM					M6	205203-M	602105-M
602-MMSS						202943-M	602905-M
604	[300 lbf] 1330 N	[0.44 lb] 0,20 kg	45:1/26:1	[1.50] 38	5/16-18	207203	606104
604-R							
604-SS	[400 lbf] 1780 N					--	606904
604-RSS							
604-MM	[300 lbf] 1330 N				M8	207943	606104-M
604-MMR							
604-MMSSⓘ	[400 lbf] 1780 N					207943-M (included)	606904-M
604-MMRSS							
624	[700 lbf] 3110 N	[1.63 lb] 0,74 kg	49:1/21:1	[2.63] 66	3/8-16	210203	624105
624-R							
624-SS						237943 (included)	624905
624-RSS							
624-MM					M10	210203-M	624105-M
624-MMR							
624-MMRSS							

ⓘ This item is available upon request **HC** = Holding Capacity, **EF** = Exerting Force, **AF** = Applied Force

Dimensions and technical information are subject to change without notice

Straight Line Action Clamps | Dimensions | -SS/-MM/-MMSS

602
602-**SS**
602-**MM**
602-**MMSS**



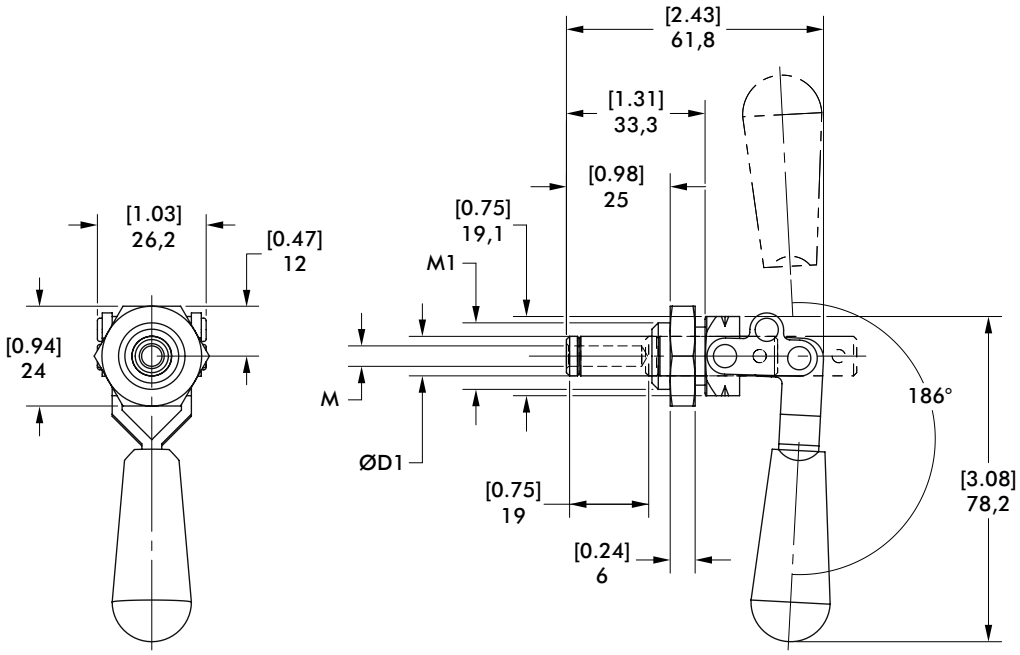

mm [INCH]

THIRD ANGLE PROJECTION

Modell	ØD1	M	M1	SW
602	10 [0.39]	1/4-20	5/8-18	[0.88] 22,2
602-SS	9,5 [0.37]			
602-MM	10 [0.39]	M6	M16x1.5	[0.87] 22
602-MMSS	10 [0.39]			

604 SERIES

Straight Line Action Clamps | Dimensions | -SS/-MM/-MMSS/-R/-RSS/-MMR/-MMRSS

604
604-**SS**
604-**MM**
604-**MMSS**ⓘ



604-**R**
604-**RSS**
604-**MMR**
604-**MMRSS**



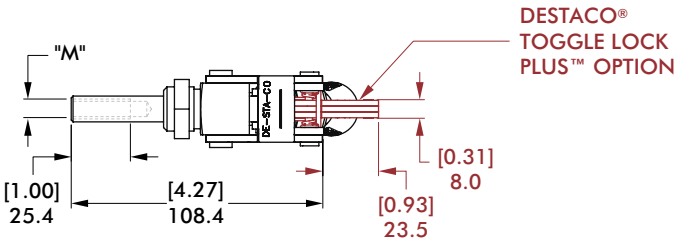

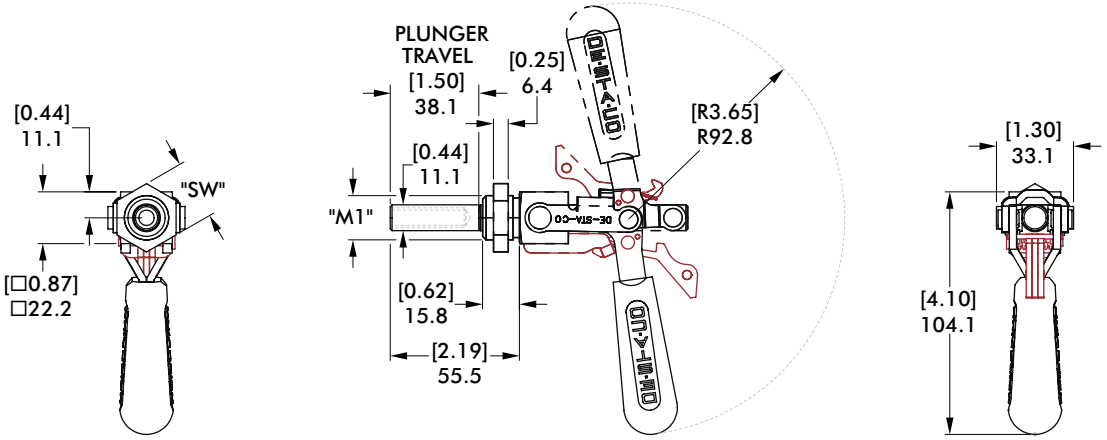

mm [INCH]
THIRD ANGLE PROJECTION

Model no.	M	M1	SW
604	5/16-18	3/4-16	[1.00] 25,4
604-SS			
604-R			
604-RSS			
604-MM	M8	M20x1.5	[1.18] 30
604-MMSS			
604-MMR			
604-MMRSS			

Straight Line Action Clamps | Dimensions | -SS/-MM/-R/-RSS/-MMR/-MMRSS

624
624-**SS**
624-**MM**



624-**R**
624-**RSS**
624-**MMR**
624-**MMRSS**



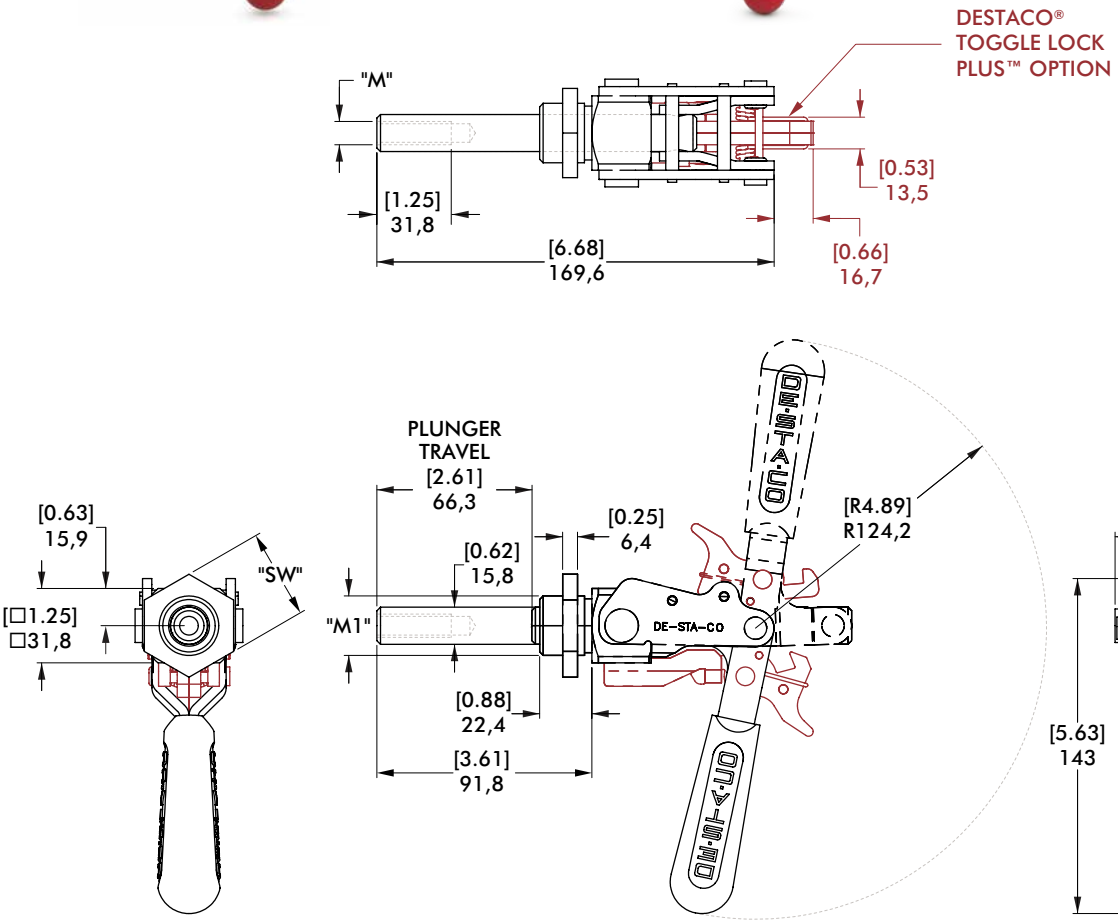

mm [INCH]

THIRD ANGLE PROJECTION

Model no.	M	M1	SW
624	3/8-16	1-14	[1.50] 38,1
624-SS			
624-R			
624-RSS			
624-MM	M10	M27x2	[1.61] 41
624-MMR			
624-MMRSS			

6004 SERIES

Straight Line Action Clamps | Product Overview

Features:
- Similar in size to Model 604, with a solid body
- 50% more holding capacity than 604
- Mounts through a hole or in a tapped hole
- Locks over center in the extended and retracted position
- 5 handle colors - see page MC-PRO-7 for details

Applications:
- Assembly
- Checking fixtures
- Welding fixtures
- Tensioning devices

Also Available:
See page MC-ACC-1 for accessories

Covered under one or more U.S./International Patents

6004
6004-**MM**



6004-**R**
6004-**MMR**
with
DESTACO®
Toggle Lock
Plus™



Color Handles
Available on models in this series.* Add **-Y**, **-G**, **-B**, **-K** to end of model number.

*Excludes Toggle Lock Plus levers.



Technical Information | Holding Capacities | Dimensions

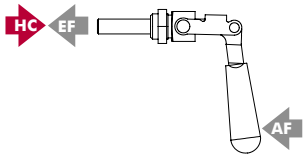

Model	Max. Holding Capacity	Weight	EF:AF (pushing)	Plunger Travel	(M) Plunger Thread	Spindle (Recom-mended)	Mounting Nut (Supplied)
6004	[450 lbf] 2000 N	[0.81 lb] 0,37 kg	14.4:1	[1.50] 38	5/16-18	207203	606104
6004-MM					M8	207203-M	606104-M
6004-R		[0.89 lb] 0,40 kg			5/16-18	207203	606104
6004-MMR					M8	207203-M	606104-M

HC = Holding Capacity, **EF** = Exerting Force, **AF** = Applied Force

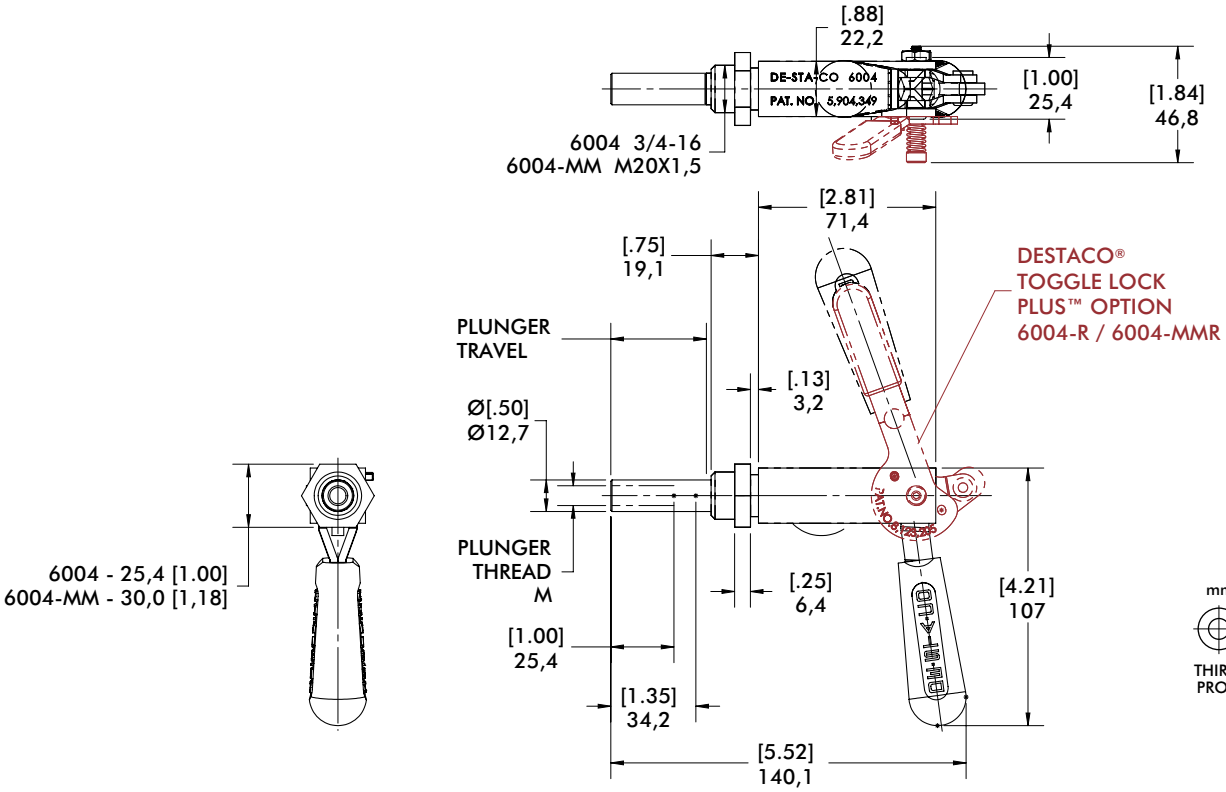

Dimensions and technical information are subject to change without notice

Features:

- Mounting accessories for Threaded Body Straight Line Action Clamps

602106-**M**



604106,
604106-**M**



624106-**M**



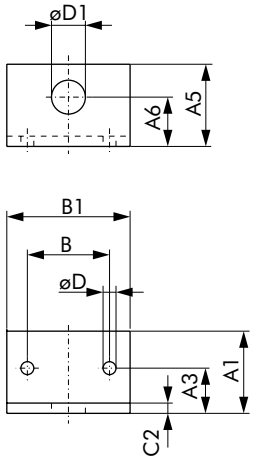

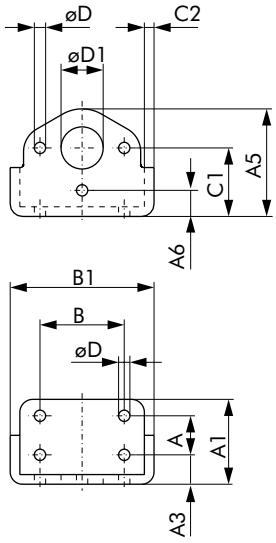

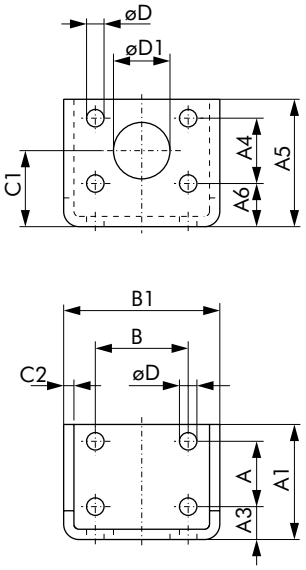

Item Number	For Use With	A	A1	A3	A4	A5	A6	B	B1	C1	C2	D	D1
602106-M	602 602-MM	--	[1.57] 40	[0.87] 22	--	[1.57] 40	[0.94] 24	[1.57] 40	[2.36] 60	--	[0.20] 5	[0.25] 6,3	[0.65] 16,5
604106	604 6004	[0.75] 19,1	[1.60] 40,6	[0.55] 14	--	[2.05] 52,1	[0.50] 12,7	[1.62] 41,1	[2.80] 71,1	[1.30] 33	[0.19] 4,7	[0.22] 5,6	[0.75] 19,1
604106-M	604-MM 6004-MM												[0.81] 20,5
624106-M	624 624-MM	[1.25] 31,8	[2.20] 56	[0.63] 16	[1.25] 31,8	[2.44] 62	[0.83] 21	[1.78] 45,2	[2.99] 76	[1.46] 37	[0.20] 5	[0.33] 8,5	[1.08] 27,5

614 SERIES

Straight Line Action Clamps | Product Overview

Features:
- Single hole threaded mount or side mount
- Precision hardened and ground plunger is designed for anti-rotation under torsional loads
- Locks in the extended or retracted position, internal locking in the push direction
- 5 handle colors - see page MC-PRO-7 for details

Applications:
- Assembly
- Checking fixtures
- Locaters and positioners

Also Available:
See page MC-ACC-1 for accessories

614-**M**



Color Handles
Available on this model.
Add **-Y**, **-G**, **-B**, **-K** to end of model number.



Technical Information | Holding Capacities | Dimensions

Model	Max. Holding Capacity	Weight	Plunger Travel	Plunger Thread	Mounting Nut (Supplied)
614-M	[1125 lbf] 5000 N	[1.81 lb] 0,82 kg	[1.26] 32	M8	614-1-10

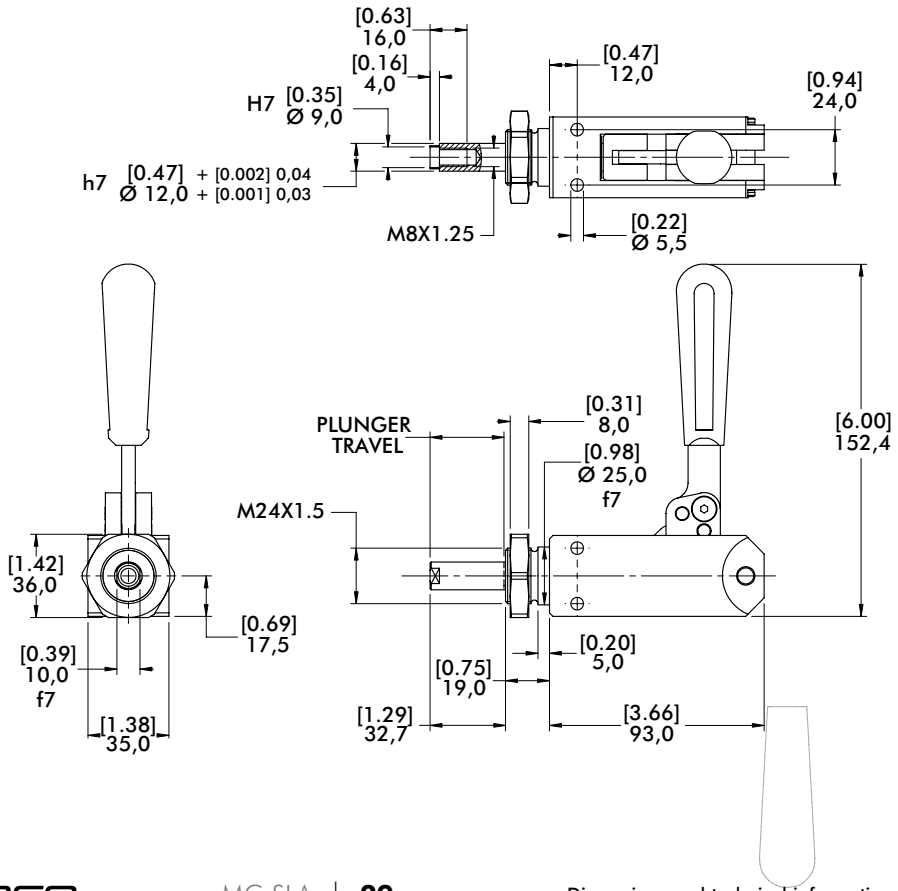

Dimensions and technical information are subject to change without notice

Notes

670, 675, 690, 695 SERIES

Straight Line Action Clamps | Product Overview

Features:
- Precision clamping for high production
- Adjustable collet-type bushing minimizes radial plunger movement
- Plunger has a flat surface for anti rotation
- Pre-load nut and hold open device included

Applications:
- Assembly
- Welding

670-**1MBPLS**



675-**1MBPLS**



690-**1MBPLS**



695-**1MBPLS**ⓘ



Series **670, 675, 690, 695** Technical Information | Holding Capacities

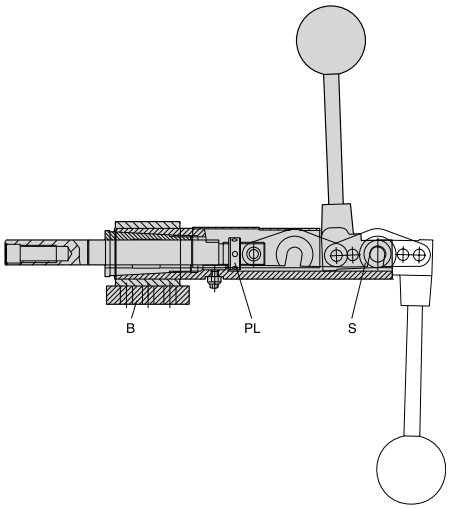

Model	Max. Holding Capacity	Weight	Plunger Travel	Plunger Thread
670-1MBPLS	[2400 lbf] 10680 N	[4.2 lb] 1,91 kg	[2.25] 57,2	M12
675-1MBPLS		[4.0 lb] 1,81 kg	[1.10] 28	
690-1MBPLS	[5000 lbf] 22240 N	[8.2 lb] 3,72 kg	[3.00] 76,2	M16
695-1MBPLSⓘ		[7.2 lb] 3,27 kg	[1.50] 38,1	

ⓘ This item is available upon request

The unique feature of these clamps is the collet-type bushing that can be adjusted to eliminate plunger end movement after long repeated use. The plunger also has a flat which prevents lateral movement and allows offset piloting and holding. The plunger is drilled and tapped for threaded spindles or custom fixturing.

The adjustable pre-load nut (PL) can be used to lock the clamp against itself when not under pressure and therefore prevent opening when mounted vertically. The spring hold-open device (S) prevents the clamp from accidentally closing.

The mounting base (B) is supplied disassembled with the four models, to enable welding the base and the main assembly in any handle position.

Series 675 and 695 (shorter stroke) reach the over-center position only when clamping. Series 670 and 690 (longer stroke) lock in both the extended and retracted position.

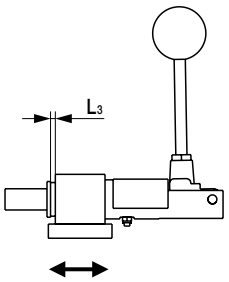

Welding range L_3 axial 0-8mm [0-0.31in.]

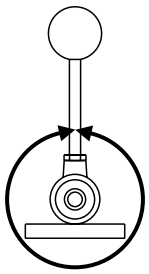

Welding range radial 360°

Dimensions and technical information are subject to change without notice

670, 675, 690, 695 SERIES

Straight Line Action Clamps | Dimensions

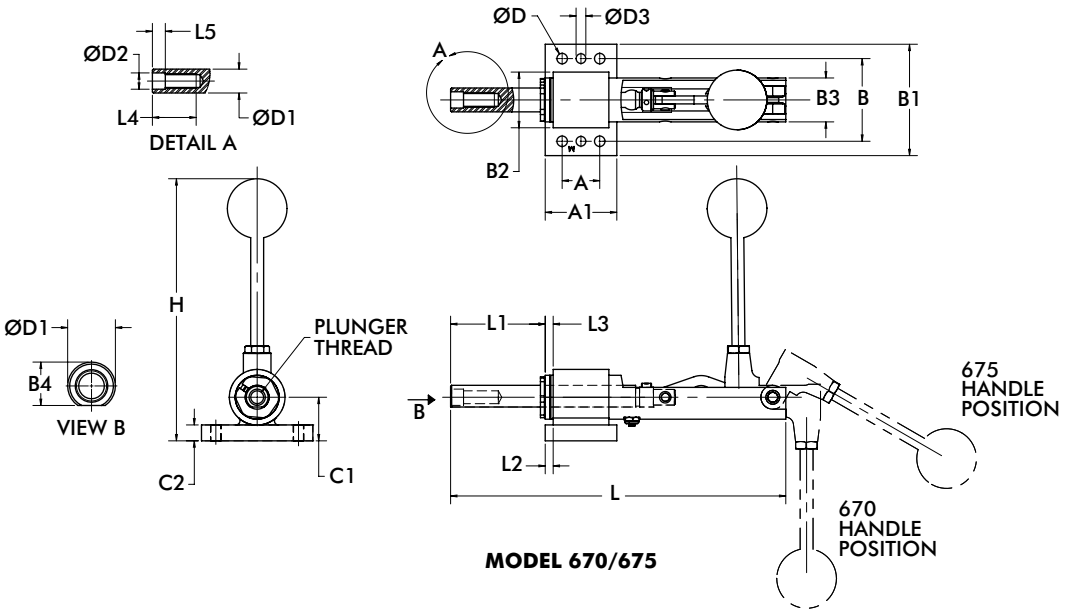

MODEL 670/675

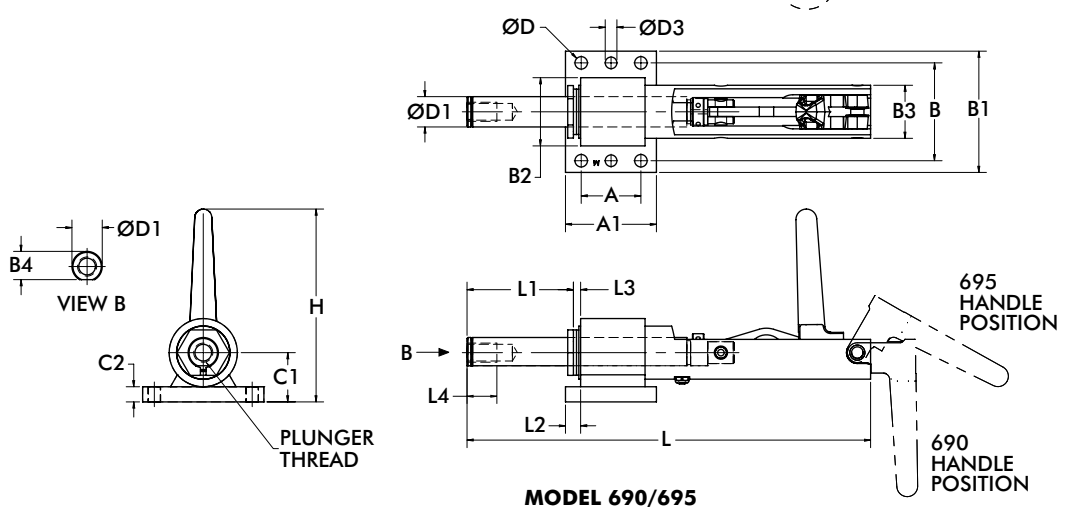

MODEL 690/695

Model	A	A1	B	B1	B2	B3	B4	C1	C2	D	D1	D2H7	D3
670-1MBPLS	[1.18] 30	[2.24] 57	[2.60] 66	[3.50] 89	[1.75] 44,5	[1.38] 35	[0.68] 17,3	[1.37] 34,8	[0.50] 12,7	[0.33] 8,4	[0.75] 19	[0.51] 13	[0.31] 7,8
675-1MBPLS													
690-1MBPLS	[1.97] 50	[3.00] 76,2	[3.23] 82	[4.00] 101,6	[2.25] 57,2	[1.75] 44,4	[0.93] 23,7	[1.63] 41,3	[0.50] 12,7	[0.41] 10,5	[1.00] 25,4	--	[0.39] 9,8
695-1MBPLS													

Model	H	L	L1	L2	L3	L4	L5
670-1MBPLS	[8.11] 206	[10.55] 268	[2.97] 75,5	[0.25] 6,4	[0-0.31] 0-8	[1.38] 35	[0.41] 10,3
675-1MBPLS		[7.68] 195	[1.74] 44,4				
690-1MBPLS	[6.37] 162	[13.31] 338	[3.69] 93,7	[0.50] 12,7	[0-0.31] 0-8	[0.98] 25	--
695-1MBPLS		[9.45] 240	[2.25] 57,2	[0.38] 9,5			

FO, FL, G SERIES

Variable Stroke Straight Line Action Clamps | Product Overview

FO Series

Type of Mounting:
- Foot mount

Type of Actuation:
- Hand wheel or hand lever (one-handed operation)
- Locking lever and Plunger (two-handed operation)

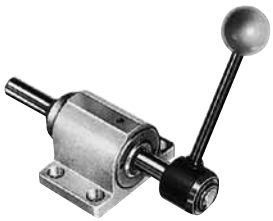

FL Series

Type of Mounting:
- Flange mount

Type of Actuation:
- Locking lever or hand wheel (one-handed operation)
- Locking lever and Plunger (two-handed operation)

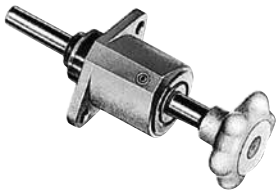

G Series

Type of Mounting:
- Through hole mount

Type of Actuation:
- Locking lever and Plunger (two-handed operation)
- Hand wheel or hand lever (one-handed operation)

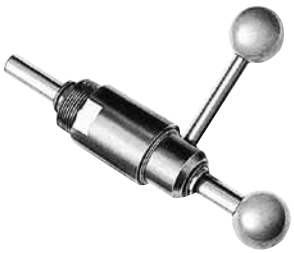

Technical Information

		Model	Holding Capacity Max. [lbs] N	Page MC-VSC-#
Flanged base 		FO-082-40 FO-120 FO-121-45 FO-122-45	[335] 1500 [675] 3000 [675] 3000 [675] 3000	
		FO-160 FO-161-60 FO-162-60 FO-220 FO-221-80	[2020] 9000 [2020] 9000 [2020] 9000 [4045] 18000 [4045] 18000	
Front flange 		FL-120 FL-121-45 FL-122-45	[675] 3000	3
		FL-160 FL-161-60 FL-162-60	[2020] 9000	
Threaded mount 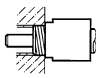		G-082-40 G-120	[335] 1500 [675] 3000	
		G-121-45 G-122-45	[675] 3000	

	Model	Holding Capacity Max. [lbs] N	Page MC-VSC-#
	F-160	[4,040] 18000	3

Accessories	Model	Page MC-VSC-#
Plunger 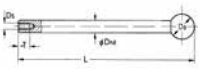	12/100 12/200 12/300 16/100 16/200 16/300 16/400 16/500 22/100 22/200 22/300	4
Swivel thrust pad 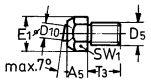	K508 K612 K816 K1222	7

Dimensions and technical information are subject to change without notice

Two-hand operation
(the plunger and the hand lever are operated separately)

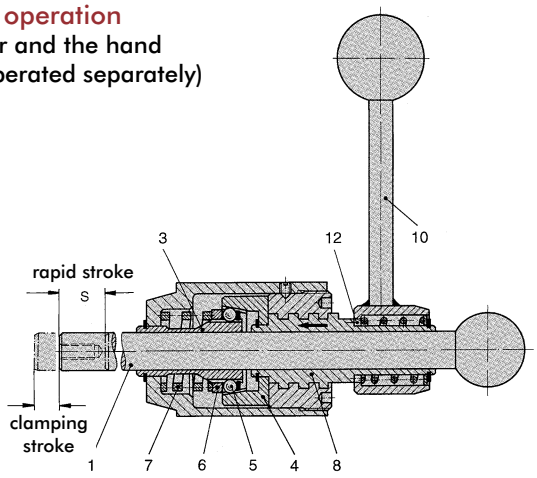

One-hand operation
(the plunger and handle lever/hand wheel are operated simultaneously)

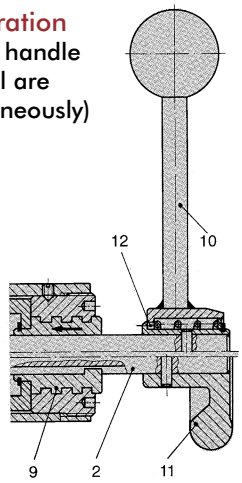

DESTACO's variable stroke Straight Line clamps are used in applications where workpiece thicknesses and workpiece tolerances vary. These clamps are suitable for clamping between ribs and hollow spaces difficult to reach.

Compact design and different types of operation allow for application of the Straight Line clamps in fixtures for mass production as well as for single part production.

Mounting types

- Foot base (FO Series)
- Flange mount (FL Series)
- Through hole mount (G Series)

Type of operation

- Two hand operation
- The hand lever (10) and the plunger (1) are separate. The hand lever is connected to the clamping mechanism. The plunger can be removed from the clamp
- One-hand operation
- The hand lever (10) or the hand wheel (11) and the plunger (2) are linked. The plunger is retained within the clamp.

Clamping operation

The plunger (1) or (2) which is guided within the clamp body contacts the workpiece. By rotating the hand lever (10) or the hand wheel (11) clock-wise the clamping stroke, S1 is engaged and the plunger is tightly gripped by the slotted clamping sleeve (3).

Operating principle

The hand lever´s (10) clock-wise rotation causes the threaded sleeve (8) and the conical sleeve (4) to which it is connected to move in the direction of the arrow shown in the drawing. The conical sleeve produces a force-locking connection between the slotted clamping sleeve (3) and the plunger by means of the ball bearings (5) located at the clamping sleeve´s perimeter.

Due to the force-locking connection, the plunger rotates and produces the clamping stroke S1. The plungers rotation may be compensated for by means of a swivel hold-down piece.

The clamping strokes S1 specified in this catalog were measured with no opposing forces present while measurements were taken. When clamping this product against a workpiece, the clamping stroke S1 is reduced by the force-locking connection between the plunger and the workpiece. The straight-action clamp is unlocked by turning the hand lever or the hand wheel counter-clockwise. This method is used for both the one-hand and the two-hand operation types. This counter-clockwise rotation makes the conical sleeve (4) and the threaded sleeve (8) or (9) move backward. The pressure spring (7) pushes back the relieved ball bearings (5) via the pressure ring (6).

The force-locking connection between the slotted clamping sleeve and the plunger can be moved freely again. Straight Line clamps which are two-hand operated can also be applied to pull actions when the plunger is inserted in the clamp´s housing in the opposite direction. On the one hand operated clamp, the rotation inducing the clamping stroke S1 is directly transmitted from the plunger (2) or the hand wheel to the threaded sleeve (9) via a groovespring connection. The clamping and unclamping operations are executed in the same way as described before.

Handling

To change the position of the handle while in the clamped or the unclamped position, pull the hand lever off its spline (12) and set it in the desired position.

Important

The holding forces specified in the catalog refer to the maximum load exerted on the clamp by counter-forces. For details concerning the clamping force FS exerted on the workpiece by the clamp and depending on the operation force FB (manual force), please see the chart on the next page.

The clamping force is proportional to the operation force. The achieved clamping force must not exceed the maximum holding force.

As the Straight Line clamps, with the exception of the F-160 model, are designed only for axial load, we recommend to use an additional radial support for the plunger in the event of side load.

FO, FL, G SERIES

Variable Stroke Straight Line Action Clamps | Technical Information

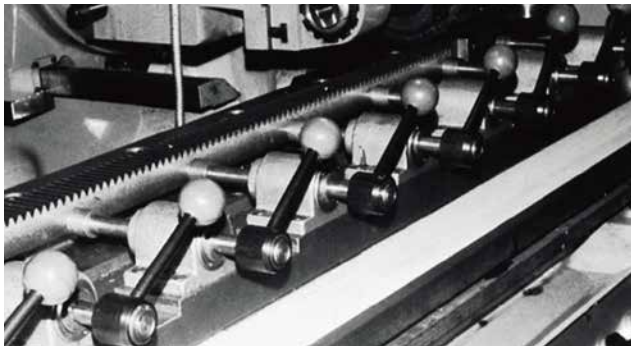

Model FO-161/60 on a milling machine

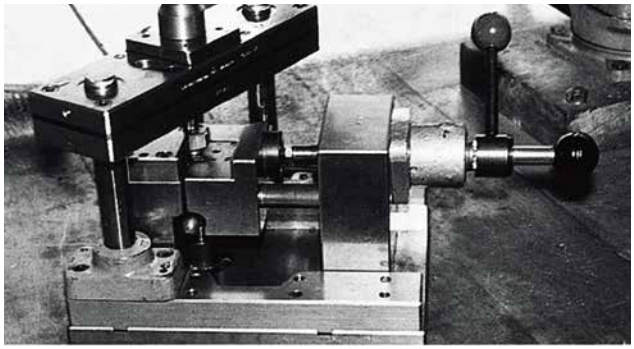

Model FL-160 with plunger 16/100 on a punching fixture

Different Designs



FO Series
Mounting type: flange base foot mount
Operating method: one-hand or two-hand operation



FL Series
Mounting type: front flange mount
Operating method: one-hand or two-hand operation



G Series
Mounting type: through hole mount
Operating method: one-hand or two-hand operation

Mounting type		Operating method: Two-hand operation, Plunger and hand lever	Operating method: One-hand operation, Hand lever	Operating method: One-hand operation, Hand wheel	Model [1] Plunger order separately; see page MC-VSG-5	Max. holding capacity [lbs.] N	Clamping force F_S with an operating force F_B: FB [lbs.] N	Clamping force F_S with an operating force F_B: FS [lbs.] N	Rapid stroke S [mm]	Max. clamping stroke S1 [mm]	Weight – [lbs] Kg
Foot mount				•	FO-082-40	[335] 1500	[22] 100	[100] 450	40	2,5	[0.72] 0,325
		•			FO-120[1]	[675] 3000		[425] 1900	100, 200, 300	3	[1.19] 0,540
			•		FO-121-45	[675] 3000		[425] 1900	45	3	[1.47] 0,665
				•	FO-122-45	[675] 3000		[100] 450	40	3	[1.34] 0,610
		•			FO-160[1]	[2020] 9000		[560] 2500	100, 200, 300	4	[2.73] 1,240
			•		FO-161-60	[2020] 9000		[560] 2500	60	4	[3.40] 1,540
				•	FO-162-60	[2020] 9000		[190] 850	60	4	[3.15] 1,430
		•			FO-220[1]	[4045] 18000		[675] 3000	100, 200, 300	4	[5.85] 2,655
			•		FO-221-80	[4045] 18000		[675] 3000	80	4	[7.46] 3,385
Flange mount		•			FL-120[1]	[675] 3000		[425] 1900	100, 200, 300	3	[1.07] 0,485
			•		FL-121-45	[675] 3000		[425] 1900	45	3	[1.34] 0,610
				•	FL-122-45	[675] 3000		[100] 450	40	3	[1.21] 0,550
		•			FL-160[1]	[2020] 9000		[560] 2500	100, 200, 300	4	[2.49] 1,130
			•		FL-161-60	[2020] 9000		[560] 2500	60	4	[3.15] 1,430
				•	FL-162-60	[2020] 9000		[190] 850	60	4	[2.92] 1,325
Through hole mount				•	G-082-40	[335] 1500		[100] 450	40	2,5	[0.66] 0,300
		•			G-120[1]	[675] 3000		[425] 1900	100, 200, 300	3	[1.01] 0.470
			•		G-121-45	[675] 3000		[425] 1900	45	3	[1.31] 0,595
				•	G-122-45	[675] 3000		[100] 450	40	3	[1.18] 0,335

Two-hand operation (the plunger and the hand lever are operated separately)

Through hole mount

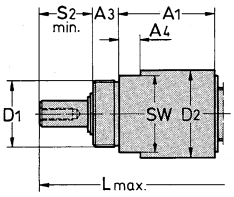

Part no. G-121/45

Flange mount

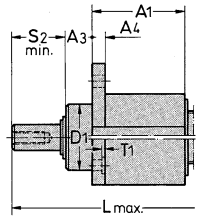

View "X"

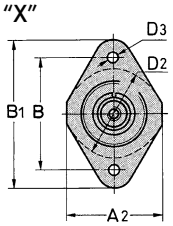

Part no. FL-120/--

View "X"

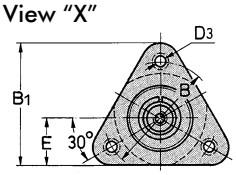

Part no. FL-160/--

Foot mount

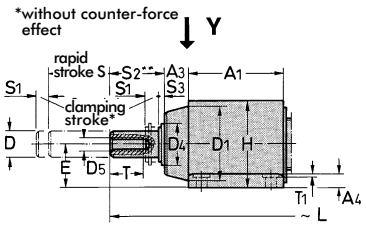

View "Y"

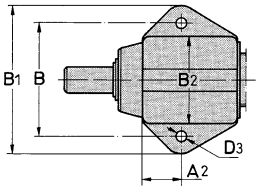

Part no. FO-120/--

View "Y"

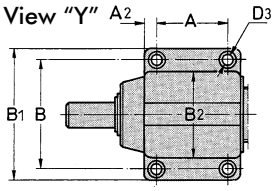

Part no. FO-160/--
FO-220/--

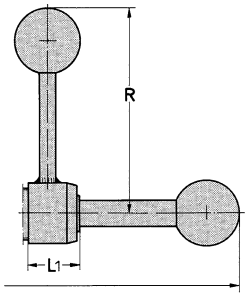

Important
The Straight Line clamps are designed only for **axial load**. In case of side load, we recommend an additional radial support of the plunger.

Accessories
(order separately)

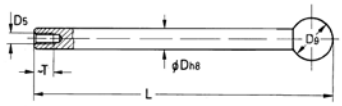

Plunger

Part no. Ø length	For rapid stroke S	Weight ~ [lbs.] kg	For clamps
12/100	100	[0.30] 0,135	FO-120 FL-120 G-120
12/200	200	[0.62] 0,280	
12/300	300	[0.82] 0,370	
16/100	100	[0.88] 0,400	FO-160 FL-160
16/200	200	[1.10] 0,500	
16/300*	300	[1.54] 0,700	
22/100	100	[2.20] 1,000	FO-220
22/200	200	[2.40] 1,090	
22/300	300	[3.06] 1,390	

*400 and 500 mm lengths available upon request.

Mounting type		Part no. without plunger	Available rapid strokes S (order plunger separately)	A	A1 ~	A2 ~	A3 ~	A4	A8	B	B1 ~	B2	Dh8	D1	D2	D3	D4
Foot mount		FO-120	100, 200, 300	–	44	19	12	6,3	8,5	52	68	40	12	35	–	6,5	20
		FO-160	100, 200, 300	40	62	11	12	12	10	70	90	52	16	46	–	9	25
		FO-220	100, 200, 300	50	75	13	20	15	12	90	115	69	22	60	–	11	36
Flange mount		FL-120	100, 200, 300	–	44	44	12	6	8,5	52	68	–	12	30f7	40	6,5	20
		FL-160	100, 200, 300	–	60	–	14	14	10	68	73	–	16	40f7	52	9	25
Through hole mount		G-120	100, 200, 300	–	44	–	12	10	8.5	–	–	–	12	M30 x1,5	40	–	20

Mounting type		Part no. without plunger	D5	D6	E	E1	H ~	~ L L with rapid strokes: 100	200	300	L1	R	S2	S3	SW ~	SW1	T	T1	T3
Foot mount		FO-120	M6	30	20	12,5	42	226	326	426	24	95	2,5	2, 5	–	11	12	–	10
		FO-160	M8	35	30	14,8	58	253	353	453	33	130	3	3	–	13	15	1	14
		FO-220	M12	40	35	19,5	71	287	387	487	35	197	3	3		17	25	1	18
Flange mount		FL-120	M6	30	–	12,5	–	226	326	426	24	95	2,5	2,5	–	11	12	–	10
		FL-160	M8	35	28	14,8	–	253	353	453	33	130	3	3	–	13	15	1	14
Through hole mount		G-120	M6	30	–	12,5	–	226	326	426	24	95	2,5	2, 5	35	11	12	–	12

FO, FL, G SERIES

Variable Stroke Straight Line Action Clamps | Technical Information | Dimensions

One-hand operation (the plunger and the hand wheel are operated simultaneously)

Through hole mount

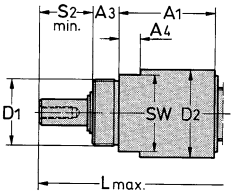

Part no. G-082/40
G-122/45

Flange mount

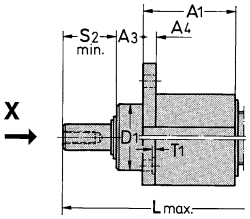

View "X"

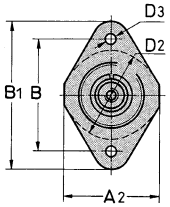

Part no. FL-122/45

View "X"

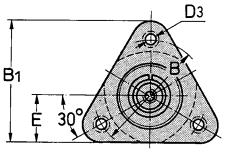

Part no. FL-162/60

Foot mount

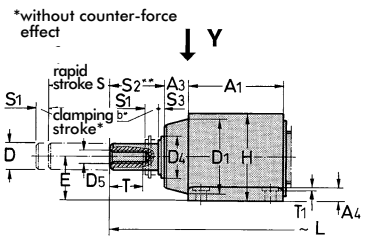

View "Y"

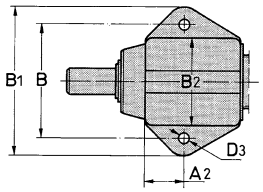

Part no. FO-082/40
FO-122/45

View "Y"

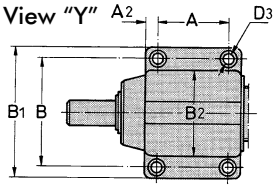

Part no. FO-162/60

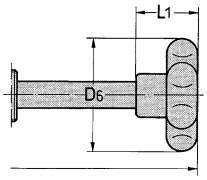

Important
The Straight Line clamps are designed only for **axial load**. In case of side load, we recommend an additional radial support of the plunger.

Mounting type	Part no. with plunger	A	A_1 ~	A_2 ~	A_3 ~	A_4	A_5	B	B_1 ~	B_2	D_{h8}	D_1	D_2	D_3	D_4
Foot mount	FO-082-40	–	37	15,3	10	5	6	44	56	35	8	30	–	4,5	16
	FO-122-45	–	44	19	12	6,3	8,5	52	68	40	12	35		6,5	20
	FO-162-60	40	62	11	12	12	10	70	90	52	16	46	–	9	25
Flange mount	FL-122-45	–	44	44	12	6	85	52	68	–	12	30f7	40	6,5	20
	FL-162-60	–	60	–	14	14	10	68	73	–	16	40f7	52	9	25
Through hole mount	G-082-40	–	37	–	10	8	6	–	–	–	8	M24x1,5	35	–	16
	G-122-45	–	44	–	12	10	8,5	–	–	–	12	M30x1,5	40	–	20

Mounting type	Part no. with plunger	D_5	D_6	E	E_1	H ~	L ~	L_1	S_2	S_3	SW ~	SW_1	T	T_1	T_3
Foot mount	FO-082-40	M5	40	18	9,2	36	128	26	9	2,5	–	8	8	–	8
	FO-122-45	M6	75	20	12,5	42	153	27	15	2,5	–	11	12	–	10
	FO-162-60	M8	75	30	14.8	58	196	35	18	3	–	13	15	1	14
Flange mount	FL-122-45	M6	52	–	12,5	–	153	27	15	2,5	–	11	12	–	10
	FL-162-60	M8	75	28	14,8	–	196	35	18	3	–	13	15	1	14
Through hole mount	G-082-40	M5	40	–	9,2	–	128	26	9	2,5	30	8	12	–	8
	G-122-45	M6	52	–	12,5		153	27	15	2,5	35	11	12	–	10

One-hand operation (the plunger and the hand lever are operated simultaneously)

Through hole mount

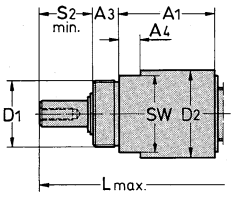

Part no. G-121/45

Flange mount

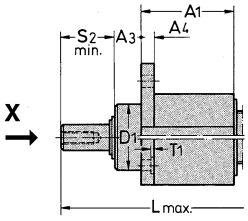

View "X"

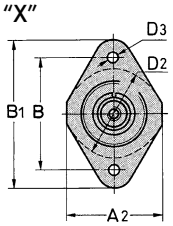

Part no. FL-121/45

View "X"

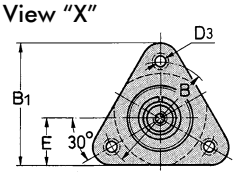

Part no. FL-161/60

Foot mount

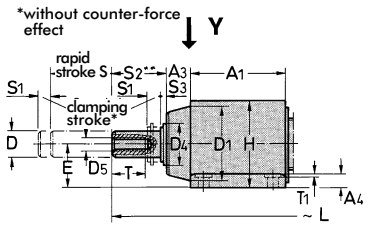

View "Y"

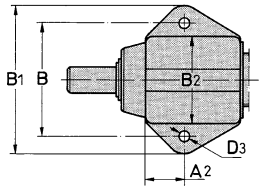

Part no. FO-121/45

View "Y"

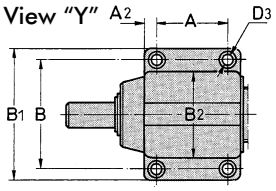

Part no. FO-161/60
FO-221/80

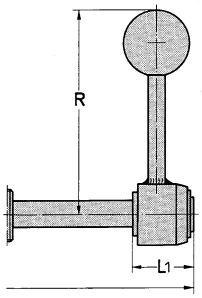

Important
The Straight Line clamps are designed only for **axial load**. In case of side load, we recommend an additional radial support of the plunger.

Mounting type	Part no. with plunger	A	A_1 ~	A_2 ~	A_3 ~	A_4	A_5	B	B_1 ~	B_2	D_{h8}	D_1	D_2	D_3	D_4
Foot mount	FO-121-45	–	44	19	12	6,3	8,5	52	68	40	12	35	–	6,5	20
	FO-161-60	40	62	11	12	12	10	70	90	52	16	46	–	9	25
	FO-221-80	50	75	13	20	15	12	90	115	69	22	60	–	11	36
Flange mount	FL-121-45	–	44	44	12	6	8,5	52	68	–	12	30f7	40	6,5	20
	FL-161-60	–	60	–	14	14	10	68	73	–	16	40f7	52	9	25
Through hole mount	G-121-45	–	44	–	12	10	8,5	–	–	–	12	M30x1,5	40	–	20

Mounting type	Part no. with plunger	D_5	E	E_1	H ~	L ~	L_1	R ~	S_2	S_3 ~	SW	SW_1	T	T_1	T_3
Foot mount	FO-121-45	M6	20	12,5	42	153	27	95	15	2,5	–	11	12	–	10
	FO-161-60	M8	30	14,8	58	196	35	130	18	3	–	13	15	1	14
	FO-221-80	M12	35	19,5	71	245	40	197	20	3	–	17	25	1	18
Flange mount	FL-121-45	M6	–	12,5	–	153	27	95	15	2,5	–	11	12	–	10
	FL-161-60	M8	28	14,8	–	196	35	130	18	3	–	13	15	1	14
Through hole mount	G-121-45	M6	–	12,5	–	153	27	95	15	2,5	35	11	12	–	10

F-160 SERIES

Variable Stroke Straight Line Action Clamps | Technical Information | Dimensions



Technical features:

- High holding capacity of [4040 lbf] 18000N lbs.
- High side load capacity
- Plunger guide
- Wiper ring avoiding contamination of clamping mechanism
- Block style base provides for variable mounting
- Low weight due to the aluminium housing
- 50 mm horizontal and vertical hole pattern

Accessories (order separately)

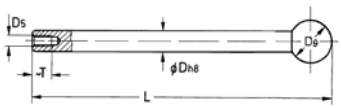

Plunger

Part no.	For rapid stroke S	D_{h8}	D_5	D_9	L ~	T ~	Weight ~ [lbs.] kg
16/100	100	16	M8	35	253	15	[0.90] 0,4
16/200	200	16	M8	35	353	15	[1.10] 0,5
16/300*	300	16	M8	35	453	15	[1.54] 0,7

*400 and 500 mm strokes available on request

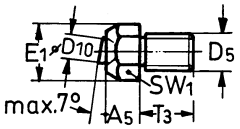

Swivel thrust pad

Part no.	Use with plunger diameter	A_5	D_5	D_{10}	E_1	T_3	SW_1
K-508	8	6	M5	5	9,2	8	8
K-612	12	8,5	M6	6	12,5	10	11
K-816	16	10	M8	8	14,8	14	13
K-1222	22	12	M12	9,5	19,5	18	17

Allowable side load F_S depending on the stroke length L_H

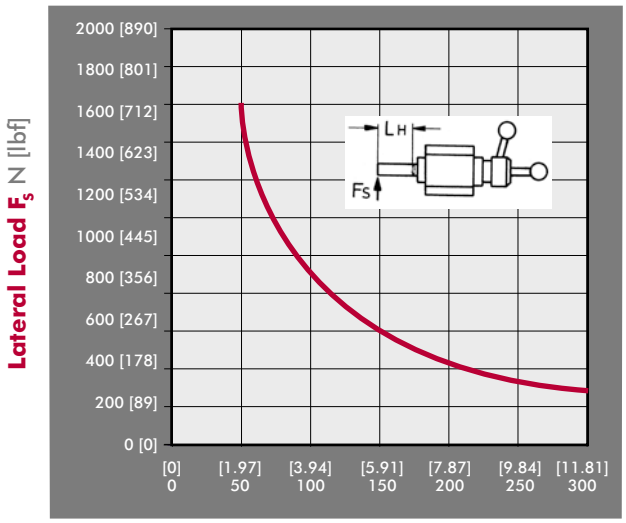

Stroke Length L_H mm [in]

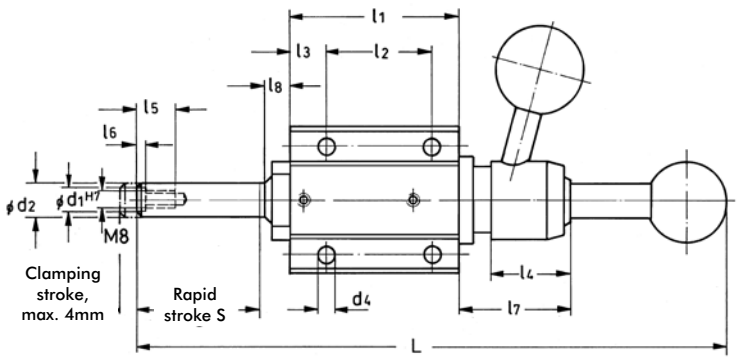

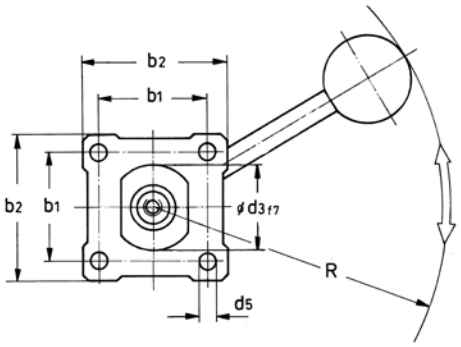

Part no. without plunger	Max. holding cap. [lbs] N	Fs* [lbs] N	b_1	b_2	~L For rapid strokes: 100	200	300	l1	l2	l3	l4	l5	l6	l7	l8	d_1^{H7}	d_{2H8}	d_3	d_4	d_5	R	Weight ~ [lbs.] kg
F-160	[4040] 18000N	[1124] 5000N	50	68	250	350	451	80	50	18	35	20	2	50	12	10	16	40	8,3	8,5	165	[3.30] 1,5

*Fs=exerting force at an operating force of [22lbf] 100N.

Dimensions and technical information are subject to change without notice

Notes

3031, 3051 SERIES

Pull Action Latch Clamps | Product Overview

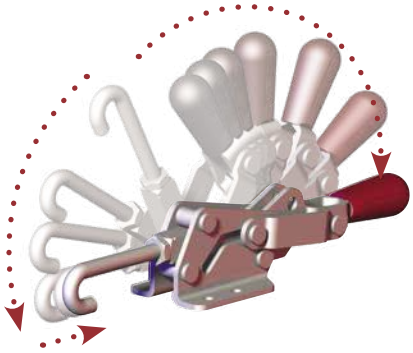

Features:

- Safe, single handed operation
- Innovative controlled motion
- Secure toggle locking action
- Simple set-up and adjustment
- Clamp hook/arm moves and stays safely out of the way
- Stainless steel version available as -**SS** models
- 5 handle colors - see page MC-PRO-7 for details

Applications:

- Molding
- Closures for doors, lids, covers
- Assembly
- Checking fixtures

3031 ⓘ
3031-**SS**



3031-**R** ⓘ
3031-**RSS** ⓘ
with DESTACO® Toggle Lock Plus™



Color Handles

Available on models in this series that use standard red handles.* Add **-Y**, **-G**, **-B**, **-K** to end of model number.

*Excludes Toggle Lock Plus levers or dipped handles.



3051
3051-**SS**



3051-**R**
3051-**RSS**
with DESTACO® Toggle Lock Plus™



Technical Information | Holding Capacities | Dimensions

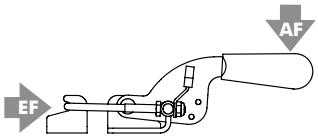

Model	Max. Holding Capacity	Weight	EF:AF	Drawing Movement	Replacement Hook Assembly	Hook Adj. Range
3031 ⓘ	[200 lbf] 900 N	[0.65 lbs] 0,30 kg	12:1	[0.50] 12,7	3031208	[0.39] 10
3031-R ⓘ						
3031-SS					3031808	
3031-RSS ⓘ						
3051	[1500 lbf] 6700 N	[1.0 lbs] 0,50 kg		[0.75] 19,1	3051208	[0.55] 14
3051-R						
3051-SS					3051808	
3051-RSS						

ⓘ Coming Soon

Dimensions and technical information are subject to change without notice

3031, 3051 SERIES

Pull Action Latch Clamps | Product Overview

3031 ⓘ
3031-SS



3031-R ⓘ
3031-RSS ⓘ



3051
3031-SS



3051-R
3051-RSS



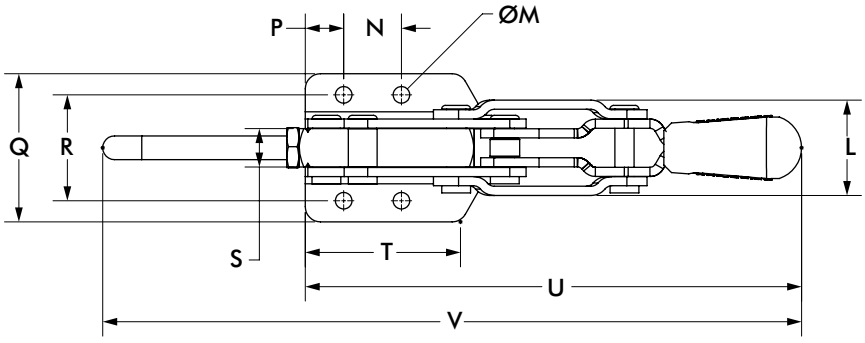

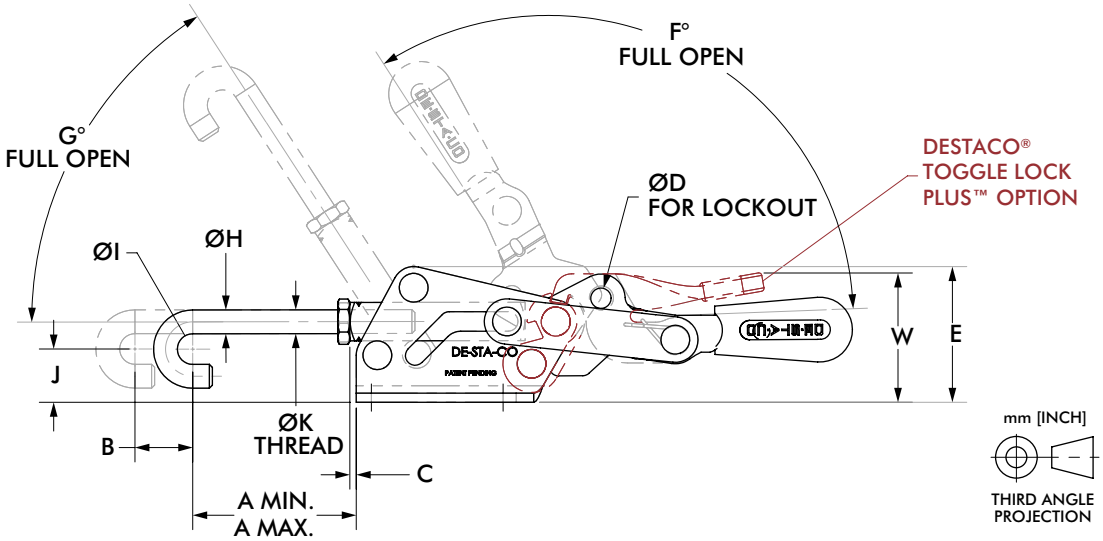

mm [INCH]

THIRD ANGLE
PROJECTION

Model	A min.	A max	B	C	D	E	F	G	H	I	J	K
3031 ⓘ	[1.62] 41,25	[2.02] 51,25	[0.50] 12,5	[0.16] 4,1	[0.19] Ø4,7	[1.35] 34,3	123°	50°	[0.17] Ø4,4	[0.32] Ø8,1	[0.48] 12,1	M5x0.8
3031-SS												
3031-R ⓘ												
3031-RSS ⓘ												
3051	[1.99] 50,6	[2.50] 63,6	[0.75] 19,1	[0.08] 2,1	[0.27] Ø6,7	[1.77] 44,9	123°	57°	[0.31] Ø8,0	[0.39] Ø10	[0.69] 17,6	M8x1.25
3051-SS												
3051-R												
3051-RSS												

Model	L	M	N	P	Q	R	S	T	U	V	W
3031 ⓘ	[1.12] 28,4	[0.22] Ø5,5	[0.75] 19,1	[0.38] 9,5	[1.69] 43	[1.22] 31,1	[0.38] 9,5	[1.65] 42	[5.71] 145,1	[8.06] 204,8	-
3031-SS											
3031-R ⓘ											[1,77] 44,8
3031-RSS ⓘ											
3051	[1.24] 31,4	[0.22] Ø5,5	[0.75] 19,1	[0.50] 12,7	[1.93] 49	[1.38] 35	[0.50] 12,7	[2.03] 51,5	[6.47] 164,4	[8.98] 228	-
3051-SS											
3051-R											[1.68] 42,7
3051-RSS											

ⓘ Coming Soon

330, 351, 371, 381 SERIES

Pull Action Latch Clamps | Product Overview

Features:
- J-hook style latch clamps are supplied with threaded J-hooks for easy adjustment
- Supplied with patented thumb control lever for one handed operation
- DESTACO® Toggle Lock Plus™ versions available
- Stainless steel version available as -**SS** models
- 5 handle colors - see page MC-PRO-7 for details

Applications:
- Molding
- Closures for doors, lids, covers
- Assembly

Also Available:
- Clamps with longer hooks available Upon Request that are 25mm, 50mm, 100mm longer than standard length
- To order clamp with longer hook, add -**M-25**, -**M-50**, or -**M-100** to the end of the model. Example: 330-**M-50**

Covered under one or more U.S./International Patents

330
330-**SS**



351
351-**SS**



351-**B**
351-**BSS**
Narrow Base



351-**R**
351-**RSS**
with DESTACO® Toggle Lock Plus™



371
371-**SS**



371-**R**
371-**RSS**
with DESTACO® Toggle Lock Plus™



381
381-**SS**



Color Handles
Available on models in this series that use standard red handles.* Add **-Y**, **-G**, **-B**, **-K** to end of model number.

*Excludes Toggle Lock Plus levers or dipped handles.



Technical Information | Holding Capacities

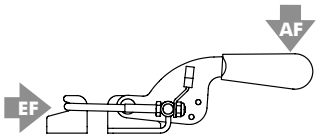

Model	Max. Holding Capacity	Weight	EF:AF	Max. Drawing Movement*	Replacement Hook Assembly	Hook Adj. Range
330	[200 lbf] 900 N	[0.24 lbs] 0,11 kg	17:1	[2.35] 59,7	330215	[0.29] 7,4
330-SS					330915	
351	1670 N [375 lbf]	[0.61 lbs] 0,28 kg	21:1	[4.00] 101,6	351215	[0.49] 12,4
351-SS	2000 N [450 lbf]				351915	
351-B	[375 lbf] 1670 N				351215	
351-BSS					351915	
351-R		[0.8 lbs] 0,36 kg			351215	
351-RSS					351915	
371	[750 lbf] 3340 N	[1.53 lbs] 0,69 kg	36:1	[5.38] 136,7	371215	[0.94] 23,9
371-SS					371915	
371-R		[1.88 lbs] 0,85 kg			371215	
371-RSS					371915	
381	[1000 lbf] 4450 N	[2.56 lbs] 1,16 kg	37:1	[6.13] 155,7	381215	[1.17] 29,7
381-SS					381915	

EF = Exerting Force, **AF** = Applied Force
*See page MC-PAL-4 and 5 for dimensions with and without thumb control lever.

330, 351, 371, 381 SERIES

Pull Action Latch Clamps | Dimensions | -SS/-B/-BSS

330
330-**SS**



351
351-**SS**



371
371-**SS**



381
381-**SS**



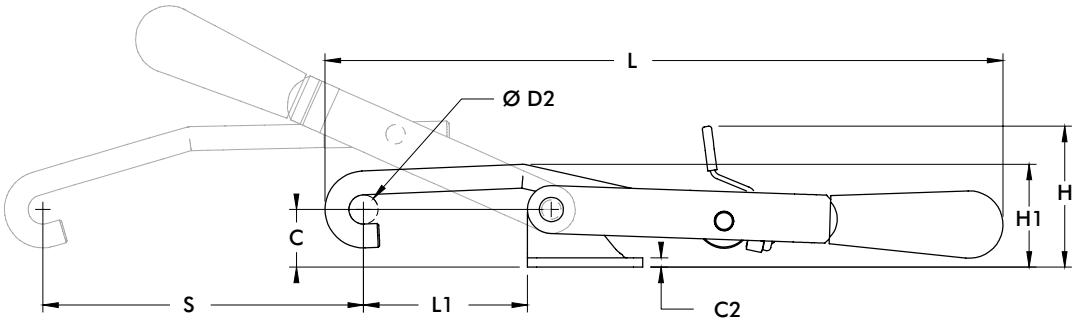

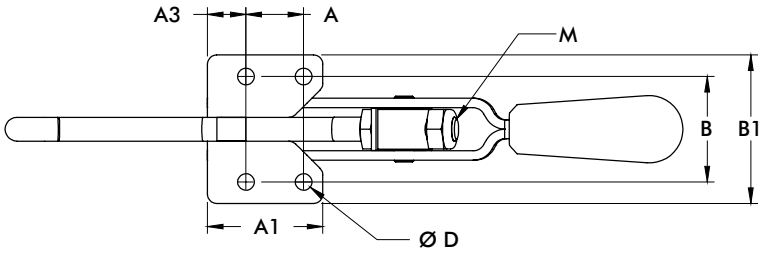

351-**B**
351-**BSS**
Narrow Base



mm [INCH]

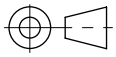

THIRD ANGLE PROJECTION

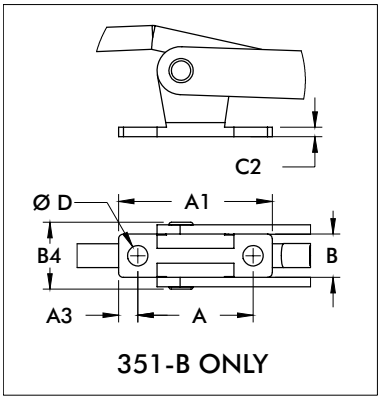

351-B ONLY

Model	A	A1	A3	B
330	[0.50] 12,7	[1.00] 25,4	[0.25] 6,4	[1.22] 30,9
330-SS				
351	[0.75] 19,1	[1.50] 38,1	[0.50] 12,7	[1.37] 34,8
351-SS				
351-B	[1.50] 38,1	[2.00] 38,1	[0.25] 6,4	[0.56] 14,3
351-BSS				
371	[1.25] 31,8	[1.94] 49,2	[0.34] 8,7	[1.94] 49,2
371-SS				
381	[1.13] 28,6	[2.13] 54,1	[0.50] 12,7	[2.37] 60,3
381-SS				

Model	B1	B4	C	C2	ØD	ØD2	H	H1	L	L1 Max	M	S	T
330	[1.69] 42,9	-	[0.56] 14,2	[0.12] 3,1	[0.22] 5,6	[0.32] 8,1	[1.43] 36,2	[0.89] 22,6	[6.01] 152,7	[1.70] 43,3	M5	[2.35] 59,7	[1.50] 38.1
330-SS													
351	[1.93] 49,1	-	[0.75] 19,1	[0.12] 3,1	[0.22] 5,5	[0.38] 9,7	[1.83] 46,6	[1.34] 34	[8.82] 224	[2.13] 54,2	M8	[4.00] 101,6	[2.75] 69.8
351-SS													
351-B	-	[0.87] 22,1	[0.86] 21,8		[0.27] 6,7		[1.94] 49,3	[1.45] 36,8		[1.63] 41,4			
351-BSS													
371	[2.63] 66,7	-	[1.42] 36,1	[0.16] 4	[0.34] 8,7	[0.50] 12,7	[2.58] 65,6	[2.23] 56,5	[11.89] 302	[2.81] 71,5	M10	[5.38] 136,7	[4.18] 106.2
371-SS													
381	[3.38] 85,9	-	[1.81] 46	[0.19] 4,7	[0.41] 10,3	[0.62] 15,7	[2.90] 73,6	[2.71] 68,8	[13.45] 341,7	[3.13] 79,5	M12	[6.13] 155,7	[4.69] 119.1
381-SS													

351-R, 371-R SERIES

Pull Action Latch Clamps | Dimensions

351-**R**
351-**RSS**
with DESTACO®
Toggle Lock
Plus™



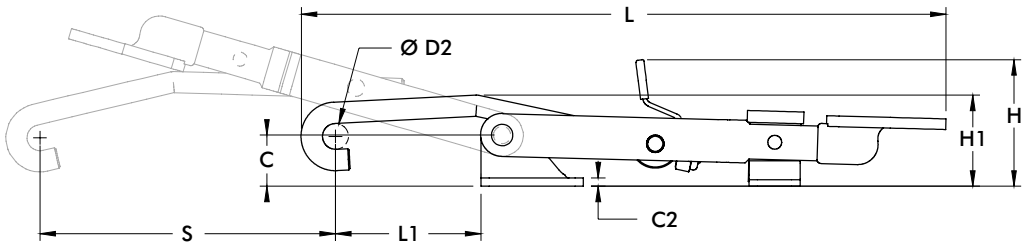

371-**R**
371-**RSS**
with DESTACO®
Toggle Lock
Plus™



mm [INCH]
THIRD ANGLE PROJECTION

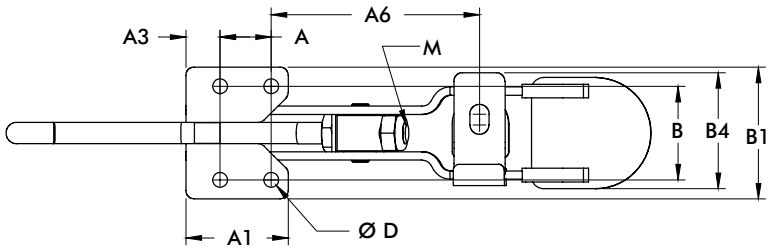

Model	A	A1	A3	A6	B	B1	B4	C	C2	ØD	H	H1
351-R	[0.75]	[1.50]	[0.50]	[3.06]	[1.37]	[1.93]	[1.70]	[0.75]	[0.12]	[0.22]	[1.85]	[1.34]
351-RSS	19,1	38,1	12,7	77,7	34,8	49,1	19,1	19,1	3,1	5,5	47,1	33,9
371-R	[1.25]	[1.94]	[0.34]	[4.73]	[1.94]	[2.63]	[2.25]	[1.42]	[0.16]	[0.34]	[2.65]	[2.22]
371-RSS	31,8	49,2	8,7	120,1	49,2	66,7	57,2	36,1	4	8,7	67,4	56,3

Model	L	L1	M	S
351-R	[9.45]	[2.13]	M8	[4.33]
351-RSS	240	54,2		110
371-R	[12.74]	[2.81]	M10	[5.59]
371-RSS	323,6	71,4		142

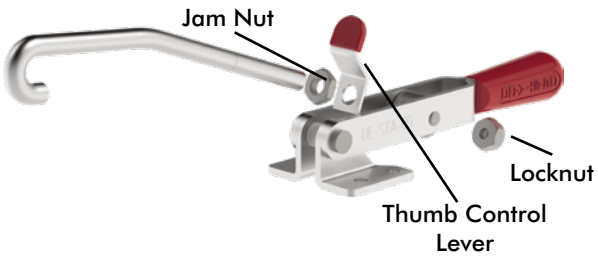

For added convenience, DESTACO Pull Action Toggle Clamps are supplied with a thumb control lever.

Replacement Thumb Control Lever	Used on Clamp Model
330-ZB1	330
351-ZB1	351, 351-B, 351-R, 351-SS, 351-RSS
371-ZB1	371, 371-R 371-SS, 3&1-RSS
381-ZB1	381, 381-SS

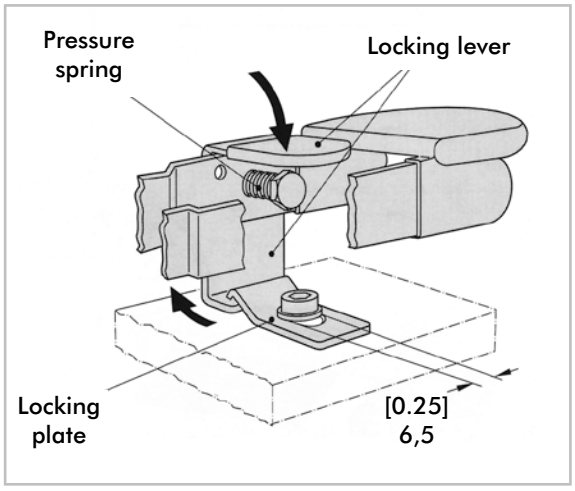

Model **351-R, 351-RSS, 371-R, 371-RSS**

Information concerning the assembly and function of the clamps locking mechanism

The locking plate which is supplied with the unit must be fastened with a screw (M6 or 1/4-20) as shown in this illustration. The screw head should be flat.

Function

When closing the latch clamp, the locking lever engages automatically. Actuate the locking lever to open the clamp.

Replacement Hook Assembly	Used on Clamp Model	A1	A2	B	ØC	M	Material
330215	330	[2.00] 50,8	[1.50] 38,1	[0.75] 19,1	[0.32] 8,1	M5 x 0.8	Steel
330215-M-25ⓘ	330-M-25	[3.00] 76,2					
330215-M-50ⓘ	330-M-50	[4.00] 101,6					
330215-M-100ⓘ	330-M-100	[6.00] 152,4					
330915	330-SS	[2.00] 50,8					Stainless Steel
330915-M-25ⓘ	330-SS-M-25	[3.00] 76,2					
330915-M-50ⓘ	330-SS-M-50	[4.00] 101,6					
330915-M-100ⓘ	330-SS-M-100	[6.00] 152,4					
351215	351, 351-B, 351-R	[2.09] 53,1	[3.38] 85,9	[1.63] 41,4	[0.38] 9,6	M8 x 1.25	Steel
351215-M-25ⓘ	351-M-25 351-B-M-25 351-R-M-25	[3.09] 78,5					
351215-M-50ⓘ	351-M-50 351-B-M-50 351-R-M-50	[4.09] 103,9					
351215-M-100ⓘ	351-M-100 351-B-M-100 351-R-M-100	[6.09] 154,7					
351915	351-SS, 351-RSS	[2.09] 53,1					Stainless Steel
351915-M-25ⓘ	351-SS-M-25 351-RSS-M-25	[3.09] 78,5					
351915-M-50ⓘ	351-SS-M-50 351-RSS-M-50	[4.09] 103,9					
351915-M-100ⓘ	351-SS-M-100 351-RSS-M-100	[6.09] 154,7					
371215	371, 371-R	[2.94] 74,7	[4.16] 105,7	[2.22] 56,4	[0.50] 12,7	M10 x 1.50	Steel
371215-M-25ⓘ	371-M-25 371-R-M-25	[3.94] 100					
371215-M-50ⓘ	371-M-50 371-R-M-50	[4.94] 125,5					
371215-M-100ⓘ	371-M-100 371-R-M-100	[6.94] 176,3					
371915	371-SS, 371-RSS	[2.94] 74,7					Stainless Steel
371915-M-25ⓘ	371-SS-M-25, 371-RSS-M-25	[3.94] 100					
371915-M-50ⓘ	371-SS-M-50 371-RSS-M-50	[4.94] 125,5					
371915-M-100ⓘ	371-SS-M-100 371-RSS-M-100	[6.94] 176,3					
381215	381	[3.00] 76,2	[4.63] 117,6	[2.50] 63,5	[0.62] 15,8	M12 x 1.75	Steel
381215-M-25ⓘ	381-M-25	[4.00] 101,6					
381215-M-50ⓘ	381-M-50	[5.00] 127					
381215-M-100ⓘ	381-M-100	[7.00] 177,8					
381915	381-SS	[3.00] 76,2					Stainless Steel
381915-M-25ⓘ	381-SS-M-25	[4.00] 101,6					
381915-M-50ⓘ	381-SS-M-50	[5.00] 127					
381915-M-100ⓘ	381-SS-M-100	[7.00] 177,8					

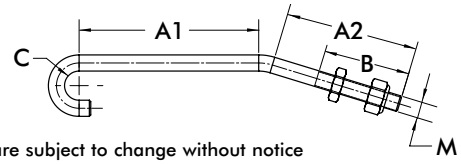

323, 331, 341 SERIES

Pull Action Latch Clamps | Product Overview

Features:
- U-hook style latch clamps are supplied with threaded U-hooks for easy adjustment
- Supplied with latch plate and patented thumb control lever for one handed operation
- DESTACO® Toggle Lock Plus™ versions available
- Stainless steel version available as **-SS** models
- 5 handle colors - see page MC-PRO-7 for details

Applications:
- Molding
- Closures for doors, lids, covers
- Assembly

Also Available:
- Clamps with longer hooks available Upon Request that are 25mm, 50mm, 100mm longer than standard length
- To order clamp with longer hook, add **-M-25**, **-M-50**, or **-M-100** to the end of the model. Example: 323-**M-50**

Covered under one or more U.S./International Patents

323
323-**SS**



323-**R**
323-**RSS**
with DESTACO®
Toggle Lock
Plus™



331
331-**SS**



331-**R**
331-**RSS**
with
DESTACO®
Toggle Lock
Plus™



341
341-**SS**



341-**R**
341-**RSS**
with DESTACO®
Toggle Lock
Plus™



Color Handles
Available on models in this series that use standard red handles.* Add **-Y**, **-G**, **-B**, **-K** to end of model number.

*Excludes Toggle Lock Plus levers or dipped handles.



Technical Information | Holding Capacities

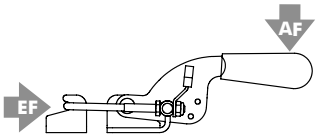

Model	Max. Holding Capacity	Weight	EF:AF	Drawing Movement	Latch Plate (Supplied)	Replacement Hook Assembly	Hook Adj. Range
323	[360 lbf] 1600 N	[0.15 lbs] 0,07 kg	27:1	[1.18] 30	323104-M	323215	[0.36] 9,1
323-SS					323104-MSS	323915	
323-R				[1.17] 29,7	323104-M	323215	
323-RSS					323104-MSS	323915	
331	[720 lbf] 3200 N	[0.56 lbs] 0,25 kg	32:1	[1.75] 44,5	331005	331215	[0.87] 22,1
331-SS					331905	331915	
331-R					331005	331215	
331-RSS					331905	331915	
341	[2000 lbf] 8900 N	[1.43 lbs] 0,65 kg	29:1	[2.50] 63,5	341005	341215	[0.97] 24,6
341-SS					341905	341915	
341-R					341005	341215	
341-RSS					341905	341915	

EF = Exerting Force, **AF** = Applied Force

323, 323-R, 331, 341 SERIES

Pull Action Latch Clamps | Dimensions | -R/-RSS

323
323-**SS**



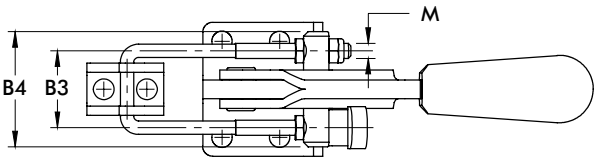

323-**R**
323-**RSS**
with DESTACO®
Toggle Lock
Plus™



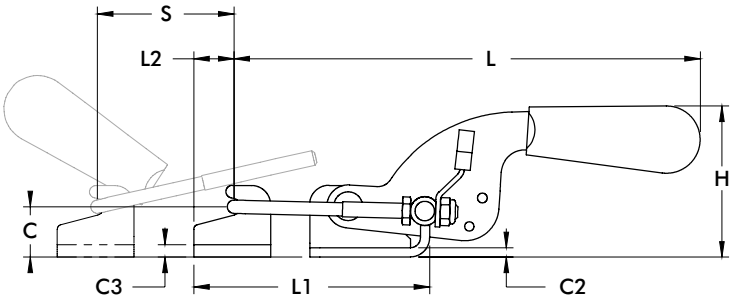

331
331-**SS**



341
341-**SS**



mm [INCH]

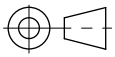

THIRD ANGLE
PROJECTION

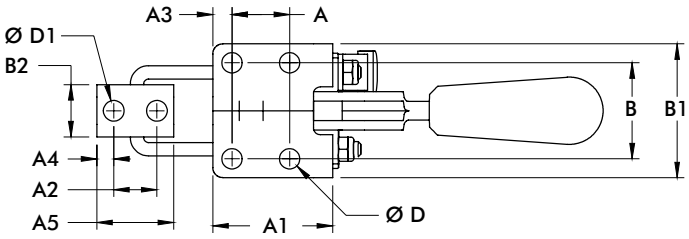

Model	A	A1	A2	A3	A4	A5	B	B1	B2	B3	B4	C	C2
323	[0.63] 16	[1.02] 26	[0.39] 10	[0.20] 5	[0.24] 6	[0.79] 20	[0.75] 19	[1.10] 28	[0.52] 13,2	[0.75] 19,1	[1.10] 28	[0.47] 12	[0.08] 2
323-SS													
323-R													
323-RSS													
331	[0.75] 19,1	[1.56] 39,7	[0.56] 14,3	[0.25] 6,4	[0.22] 5,6	[1.00] 25,4	[1.26] 32	[1.74] 44,3	[0.68] 17,3	[1.00] 25,4	[1.50] 38,1	[0.66] 16,7	[0.12] 3,1
331-SS													
341	[1.63] 41,3	[2.38] 60,5	[0.75] 19,1	[0.38] 9,7	[0.38] 9,5	[1.50] 38,1	[1.50] 38,1	[2.12] 53,8	[1.19] 30,1	[1.75] 44,5	[2.38] 60,5	[0.94] 23,8	[0.16] 4
341-SS													

Model	C3	ØD	ØD2	H	L	L1 MAX	L2	M	S
323	[0.08] 2	[0.17] 4,2	[0.17] 4,2	[1.19] 30,3	[3.88] 98,6	[2.32] 58,9	[0.37] 9,3	M4	[1.18] 30
323-SS									
323-R									
323-RSS									
331	[0.12] 3,1	[0.27] 6,7	[0.27] 6,9	[1.97] 50	[6.07] 154,2	[3.07] 78	[0.52] 13,3	M5	[1.75] 45,5
331-SS									
341	[0.16] 4	[0.33] 8,5	[0.33] 8,5	[2.89] 73,4	[8.20] 208,3	[4.59] 116,6	[0.75] 19,1	M8	[2.50] 63,5
341-SS									

331-R, 341-R SERIES

Pull Action Latch Clamps | Dimensions | -R/-RSS

331-**R**
331-**RSS**
with DESTACO®
Toggle Lock
Plus™



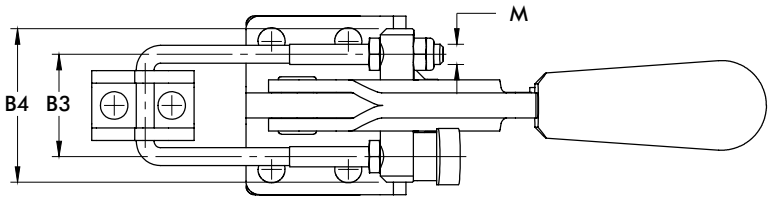

341-**R**
341-**RSS**
with DESTACO®
Toggle Lock
Plus™



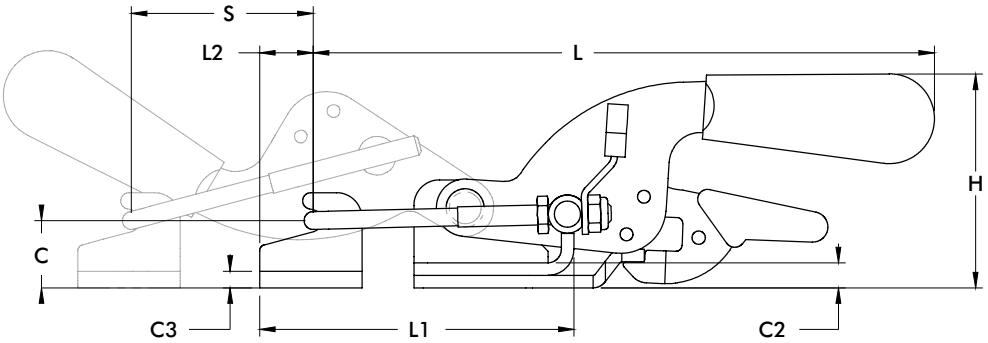

mm [INCH]

THIRD ANGLE PROJECTION

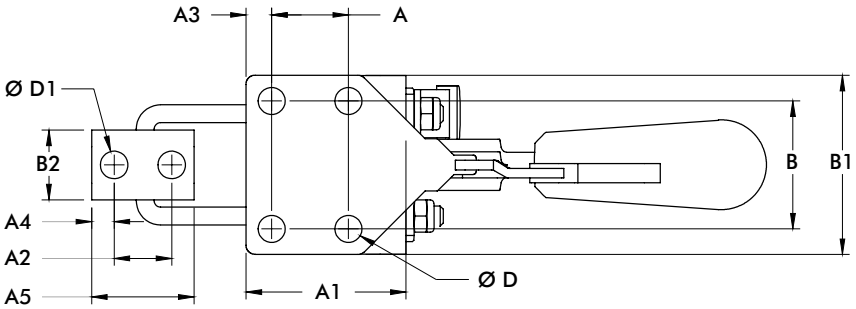

Model	A	A1	A2	A3	A4	A5	B	B1	B2	B3	B4	C	C2
331-R	[0.75] 19,1	[1.56] 39,7	[0.56] 14,3	[0.25] 6,4	[0.22] 5,6	[1.00] 25,4	[1.25] 31,8	[1.74] 44,3	[0.68] 17,3	[1.00] 25,4	[1.50] 38,1	[0.66] 16,7	[0.12] 3,1
331-RSS													
341-R	[1.63] 41,3	[2.38] 60,5	[0.75] 19,1	[0.38] 9,7	[0.38] 9,5	[1.50] 38,1	[1.50] 38,1	[2.12] 53,8	[1.19] 30,1	[1.75] 44,5	[2.38] 60,5	[0.94] 23,8	[0.16] 4
341-RSS													

Model	C3	ØD	ØD2	H	L	L1 MAX	L2	M	S
331-R	[0.12] 3,1	[0.27] 6,7	[0.27] 6,9	[2.01] 53,1	[6.07] 154,2	[3.07] 78	[0.52] 13,3	M5	[1.75] 45,5
331-RSS									
341-R	[0.16] 4	[0.33] 8,5	[0.33] 8,5	[2.89] 73,4	[8.20] 208,3	[5.24] 133,2	[0.77] 19,4	M8	[2.50] 63,5
341-RSS									

Dimensions and technical information are subject to change without notice

Replacement Hook Assembly	Used on Clamp Model	A	B	C	M	Material
323215	323, 323-R	[2.12] 53,8	[0.94] 23,8	[0.75] 19,1	M4 x 0.7	Steel
323215-M-25ⓘ	323-M-25, 323-R-M-25	[3.12] 79,2				
323215-M-50ⓘ	323-M-50, 323-R-M-50	[4.12] 104,6				
323215-M-100ⓘ	323-M-100, 323-R-M-100	[6.12] 155,4				
323915	323-SS, 323-RSS	[2.12] 53,8				Stainless Steel
323915-M-25ⓘ	323-SS-M-25, 323-RSS-M-25	[3.12] 79,2				
323915-M-50ⓘ	323-SS-M-50, 323-RSS-M-50	[4.12] 104,6				
323915-M-100ⓘ	323-SS-M-100, 323-RSS-M-100	[6.12] 155,4				
331215	331, 331-R	[3.00] 76,2	[1.50] 38,1	[1.00] 25,4	M5 x 0.8	Steel
331215-M-25ⓘ	331-M-25, 331-R-M-25	[4.00] 101,6				
331215-M-50ⓘ	331-M-50, 331-R-M-50	[5.00] 127				
331215-M-100ⓘ	331-M-100, 331-R-M-100	[7.00] 177,8				
331915	331-SS, 331-RSS	[3.00] 76,2				Stainless Steel
331915-M-25ⓘ	331-SS-M-25, 331-RSS-M-25	[4.00] 101,6				
331915-M-50ⓘ	331-SS-M-50, 331-RSS-M-50	[5.00] 127				
331915-M-100ⓘ	331-SS-M-100, 331-RSS-M-100	[7.00] 177,8				
341215	341, 341-R	[4.31] 109,5	[1.97] 50	[1.75] 44,5	M8 x 1.25	Steel
341215-M-25ⓘ	341-M-25, 341-R-M-25	[5.31] 135				
341215-M-50ⓘ	341-M-50, 341-R-M-50	[6.31] 160,2				
341215-M-100ⓘ	341-M-100, 341-R-M-100	[8.31] 211				
341915	341-SS, 341-RSS	[4.31] 109,5				Stainless Steel
341915-M-25ⓘ	341-SS-M-25, 341-RSS-M-25	[5.31] 135				
341915-M-50ⓘ	341-SS-M-50, 341-RSS-M-50	[6.31] 160,2				
341915-M-100ⓘ	341-SS-M-100, 341-RSS-M-100	[8.31] 211				

ⓘ This item is available upon request.

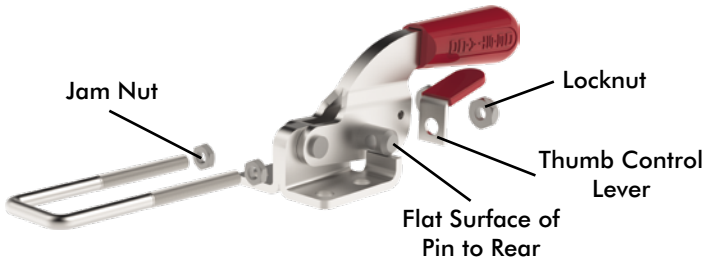

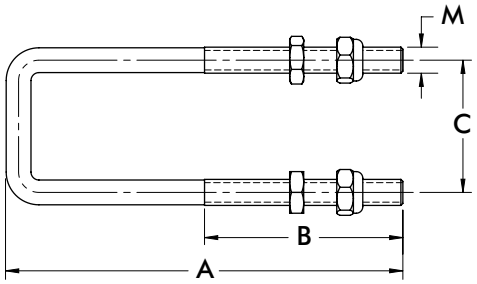

For added convenience, DESTACO Pull Action Toggle Clamps are supplied with a thumb control lever that allows the clamp to be operated with one hand.

Replacement Thumb Control Lever	Used on Clamp Model
324-ZB1	323, 323-SS
330-ZB1	331, 331-SS 331-R, 331-RSS
341-ZB1	341, 341-SS 341-R, 341-RSS

375 SERIES

Pull Action Latch Clamps | Dimensions

Features:
- Heavy duty U-hook latch clamps are supplied with threaded U-hooks for easy adjustment
- Supplied patented thumb control lever for one handed operation
- DESTACO® Toggle Lock Plus™ versions available
- 5 handle colors - see page MC-PRO-7 for details

Applications:
- Molding
- Closures for doors, lids, covers
- Assembly

Also Available:
- Clamps with longer hooks available Upon Request that are 25mm, 50mm, 100mm longer than standard length
- To order clamp with longer hook, add **-M-25**, **-M-50**, or **-M-100** to the end of the model. Example: 375-**M-50**

Covered under one or more U.S./International Patents

375



375-**R**
with DESTACO® Toggle Lock Plus™



375-**B**
Weld-on Mounting



375-**BR**ⓘ
Weld-on Mounting
with DESTACO® Toggle Lock Plus™



375509
Cleat



385102
Optional Latch Plate for 375 and 375-R



Color Handles
Available on models in this series that use standard red handles.* Add **-Y**, **-G**, **-B**, **-K** to end of model number.

*Excludes Toggle Lock Plus levers or dipped handles.



Technical Information | Holding Capacities

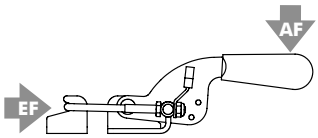

Model	Max. Holding Capacity	Weight	EF:AF	Drawing Movement	Latch Plate	Replacement Hook Assembly	Hook Adj. Range
375	[4000 lbf] 17800 N	[2.94 lbs] 1,33 kg	44:1	[3.50] 88,9	385102 (Optional)	375204	[0.81] 20,5
375-R		[3.0 lbs] 1,36 kg					
375-B		[2.56 lbs] 1,16 kg			375509 (Supplied)		
375-BRⓘ		[2.62 lbs] 1,19 kg					

ⓘ This item is available upon request. **EF** = Exerting Force, **AF** = Applied Force

375



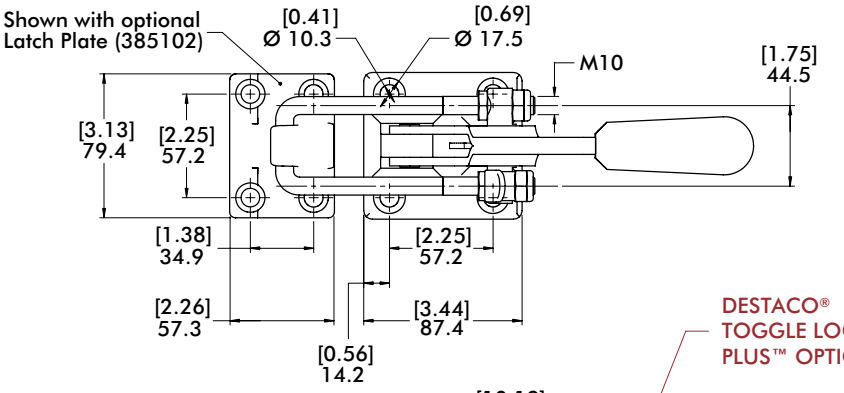

375-**R**
with DESTACO® Toggle Lock Plus™



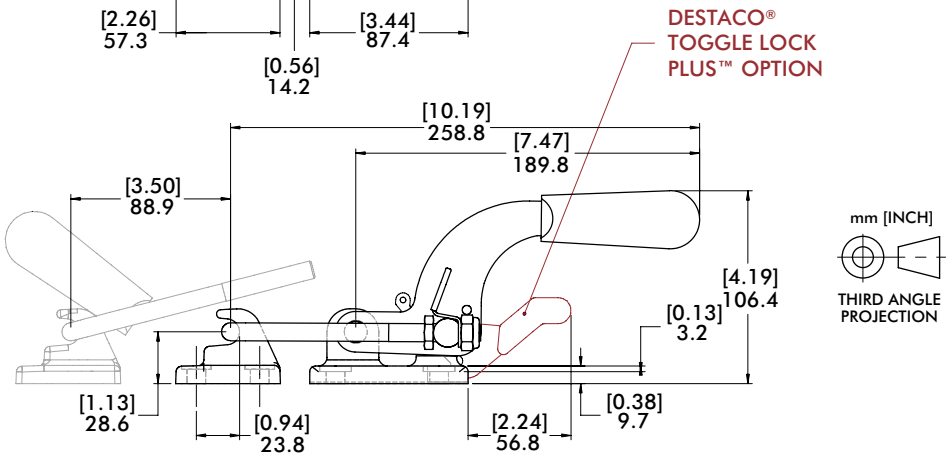

375-**B**
Weld-on Mounting



375-**BR**ⓘ
Weld-on Mounting with DESTACO® Toggle Lock Plus™



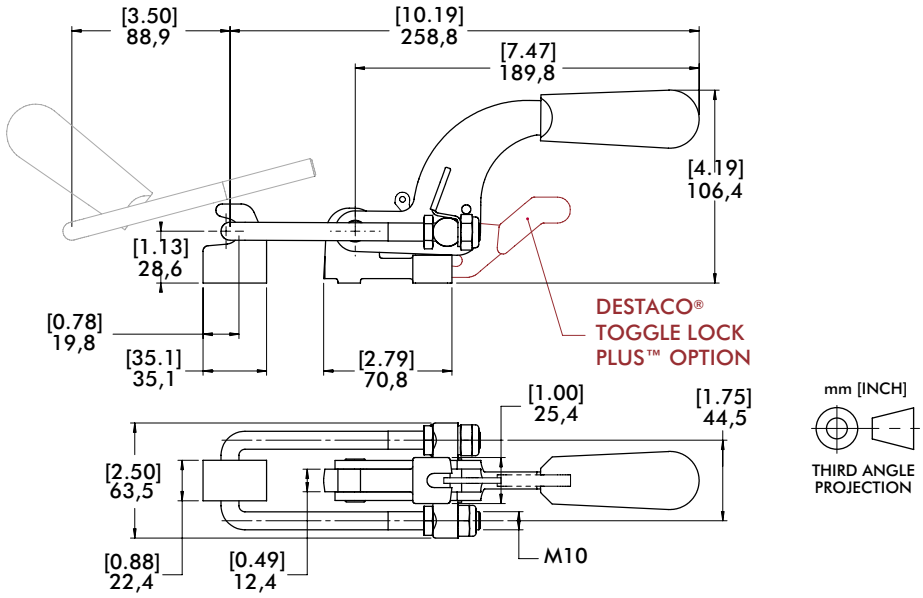

Replacement Hook Assembly	A	B	C	M
375215	[5.72] 145	50,8 [2.00]	[1.75] 44,5	M10 x 1.50

Hook assembly includes (2) jam nuts and (2) locknuts. Longer hook lengths available Upon Request. 375215-M-25, 375215-M-50, 375215-M-100

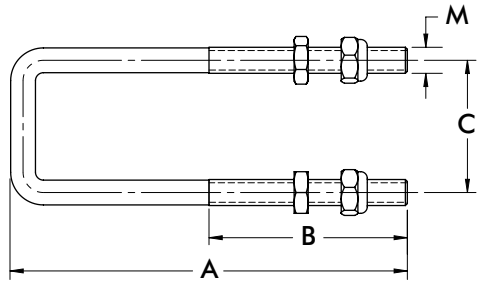

Replacement Thumb Control Lever	Used on Clamp Model
375-ZB1	375, 375-B 375-R, 375-BR



385 SERIES

Pull Action Latch Clamps | Dimensions

Features:
- Heavy duty U-hook style latch clamps are supplied with threaded U-hooks for easy adjustment
- Supplied with patented thumb control lever for one handed operation
- DESTACO® Toggle Lock Plus™ versions available

Applications:
- Molding
- Closures for doors, lids, covers
- Assembly

Also Available:
- Clamps with longer hooks available Upon Request that are 25mm, 50mm, 100mm longer than standard length
- To order clamp with longer hook, add **-M-25**, **-M-50**, or **-M-100** to the end of the model. Example: 385-**M-50**

Covered under one or more U.S./International Patents

385
385-**SS**



385-**R**
385-**RSS**
with DESTACO® Toggle Lock Plus™



385-**L**
Low Profile Handle



385102
Optional Latch Plate for 385, 385-R and 385-L



385902
Optional Stainless Latch Plate for 385-SS and 385-RSS



Technical Information | Holding Capacities

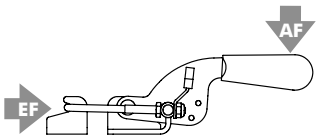

Model	Max. Holding Capacity	Weight	EF:AF	Drawing Movement	Latch Plate/Cleat (Optional)	Replacement Hook Assembly	Hook Adj. Range
385	[7500 lbf] 33300 N	[3.3 lbs] 1,50 kg	44:1	[2.19] 55,6	385102 385902 (Stainless Steel)	385215 385915 (Stainless Steel)	[1.36] 34,5
385-SS							
385-R		[3.4 lbs] 1,54 kg					
385-RSS							
385-L		[3.3 lbs] 1,50 kg					

ⓘ This item is available upon request. **EF** = Exerting Force, **AF** = Applied Force

Dimensions and technical information are subject to change without notice

385, 385-R, 385-L SERIES

Pull Action Latch Clamps | Dimensions

385
385-**SS**



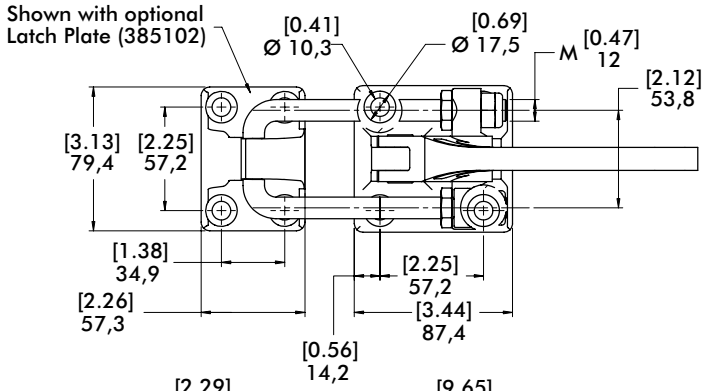

385-**R**
385-**RSS**
with DESTACO®
Toggle Lock
Plus™



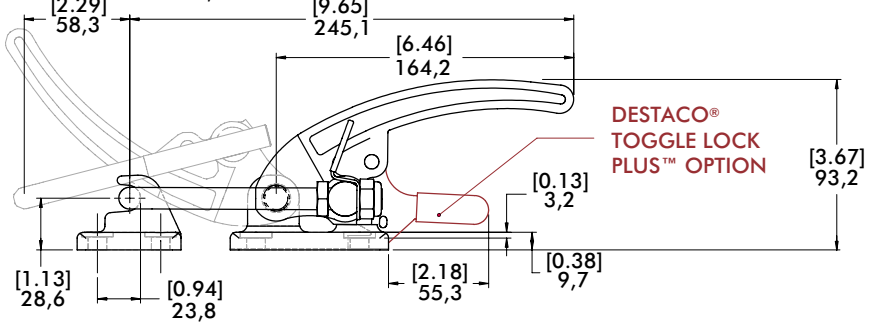

385-**L**
Low Profile
Handle



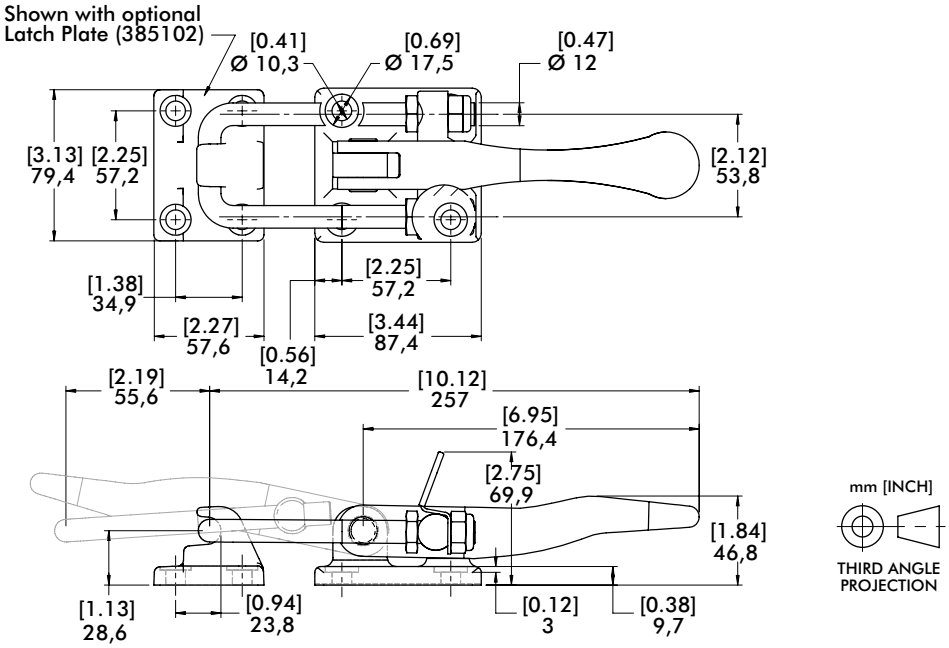

385, 385-R, 385-L SERIES

Pull Action Latch Clamps | Replacement Hook Assembly | Dimensions

Replacement Hook Assembly	Used on Clamp Model	A	B	C	M	Material
385215	385, 385-R, 385-L	[5.72] 145,3	[2.75] 70	[2.12] 53,8	M12 x 1.75	Steel
385215-M-25ⓘ	385-M-25, 385-R-M-25 385-L-M-25	[6.72] 170,7				
385215-M-50ⓘ	385-M-50, 385-R-M-50 385-L-M-50	[7.72] 196				
385215-M-100ⓘ	385-M-100, 385-R-M-100 385-L-M-100	[9.72] 247				
385915	385-SS, 385-RSS	[5.72] 145,3				Stainless Steel
385915-M-25ⓘ	385-SS-M-25, 385-RSS-M-25	[6.72] 170,7				
385915-M-50ⓘ	385-SS-M-50, 385-RSS-M-50	[7.72] 196				
385915-M-100ⓘ	385-SS-M-100, 385-RSS-M-100	[9.72] 247				

ⓘ This item is available upon request.

Replacement Thumb Control Lever	Used on Clamp Model
385-ZB1	385, 385-R, 385-L, 385-SS, 385-RSS



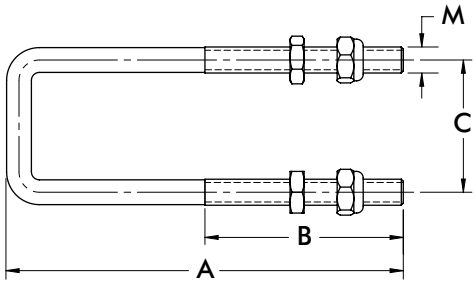

Dimensions and technical information are subject to change without notice

324, 334, 344, 374 SERIES

Pull Action Latch Clamps | Product Overview

Features:
- U-hook style latch clamps supplied with threaded U-hooks for easy adjustment
- Supplied with latch plate (except 374) and patented thumb control lever for one handed operation.
- DESTACO® Toggle Lock Plus™ versions available
- Stainless steel available as -**SS** models.
- 5 handle colors - see page MC-PRO-7 for details

Covered under one or more U.S./International Patents

Applications:
- Molding
- Closures for doors, lids, covers
- Assembly

Also Available:
- Clamps with longer hooks available Upon Request that are 25mm, 50mm, 100mm longer than standard length
- To order clamp with longer hook, add -**M**-**25**, -**M**-**50**, or -**M**-**100** to the end of the model. Example: 324-**M**-**50**

324
324-**SS**



324-**R**
324-**RSS**
with DESTACO® Toggle Lock Plus™



334
334-**SS**



334-**R**
334-**RSS**
with DESTACO® Toggle Lock Plus™



344
344-**SS**



344-**R**
344-**RSS**
with DESTACO® Toggle Lock Plus™



374



Color Handles

Available on models in this series that use standard red handles.* Add **-Y**, **-G**, **-B**, **-K** to end of model number.

*Excludes Toggle Lock Plus levers or dipped handles.



Technical Information | Holding Capacities

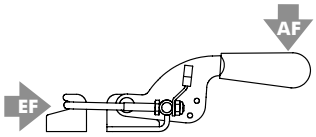

Model	Max. Holding Capacity	Weight	EF:AF	(S) Drawing Movement	Latch Plate (Supplied)	Replacement Hook Assembly	Hook Adj. Range
324	[500 lbf] 2200 N	[0.25 lbs] 0,11 kg	31:1	[1.53] 38,7	324101	324215	[0.47] 11,9
324-SS					324901	324915	
324-R					324101	324215	
324-RSS					324901	324915	
334	[1000 lbf] 4450 N	[0.60 lbs] 0,27 kg		[2.04] 51,7	334101	334215	[0.76] 19,3
334-SS					334901	334915	
334-R					334101	334215	
334-RSS					334901	334915	
344	[2000 lbf] 8900 N	[1.50 lbs] 0,68 kg	45:1	[2.46] 62,4	344101	344215	[1.22] 31
344-SS					344901	344915	
344-R					344101	344215	
344-RSS					344901	344915	
374	[4000 lbf] 17800 N	[2.10 lbs] 0,95 kg	36:1	[1.75] 44,5	None*	374215	[2.12] 53,8

EF = Exerting Force, **AF** = Applied Force *375509 Latch Plate may be used as an alternate.

324, 334, 344, 374 SERIES

Pull Action Latch Clamps | Dimensions | -SS

324
324-**SS**



334
334-**SS**



344
344-**SS**



374



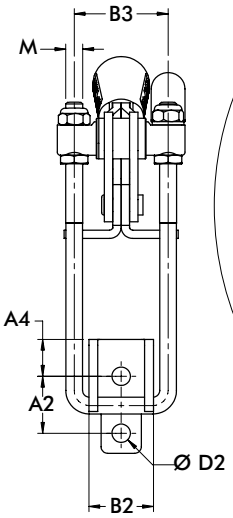

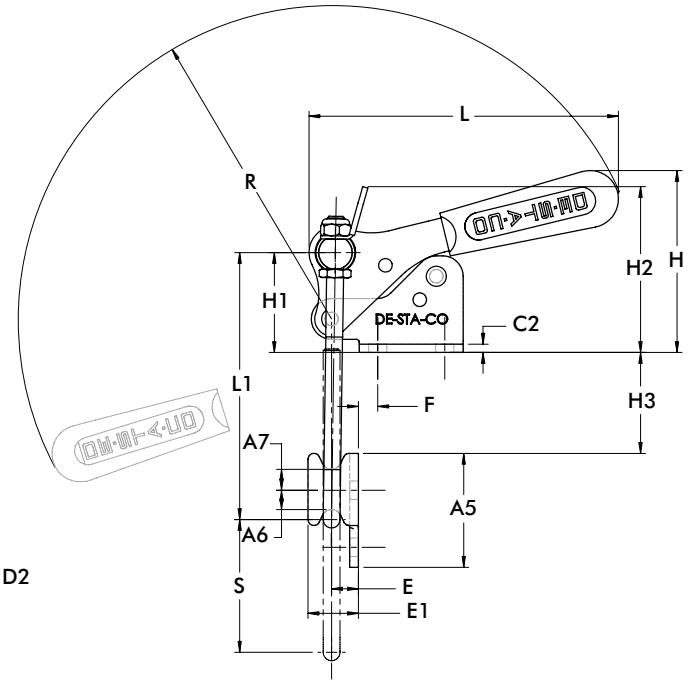

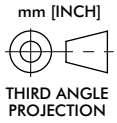

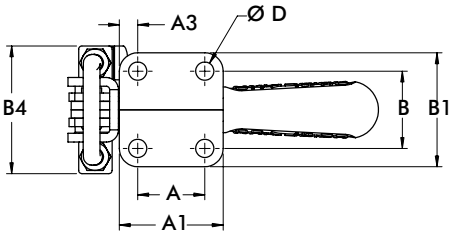

Model	A	A1	A2	A3	A4	A5	A6	A7	B	B1	B2	B3	B4	C2
324	[0.50] 12,7	[1.00] 25,4	[0.56] 14,2	[0.25] 6,4	[0.28] 7,1	[1.00] 25,4	[0.19] 4,8	[0.19] 4,8	[0.88] 22,4	[1.38] 35,1	[0.53] 13,5	[0.81] 20,7	[1.19] 30,2	[0.09] 2,4
324-SS														
334	[0.75] 19,1	[1.31] 33,3	[0.81] 20,6	[0.28] 7,1	[0.41] 10,4	[1.50] 38,1	[0.28] 7,1	[0.28] 7,1	[1.00] 25,4	[1.56] 39,6	[0.68] 17,4	[1.13] 28,7	[1.63] 41,4	[0.12] 3,1
334-SS														
344	[1.25] 31,8	[1.94] 49,3	[1.06] 27	[0.35] 8,0	[0.69] 17,5	[2.13] 54	[0.36] 9,1	[0.39] 9,9	[1.44] 36,6	[2.12] 53,8	[1.20] 30,6	[1.75] 44,5	[2.38] 60,5	[0.16] 4
344-SS														
374		[2.43] 61,7	--	[0.68] 17,3	--	--	--	--	[1.50] 38,1	[2.50] 63,5	--		[2.36] 60	[0.37] 9,4

Model	ØD	ØD2	F	H	H1	H2	H3	E	E1	L	L1 MAX	R	M	S
324	[0.20] 5,1	[0.17] 4,3	[0.25] 6,4	[1.91] 48,5	[1.10] 28	[1.97] 50,1	[0.92] [23,4]	[0.19] 4,4	[0.38] 9,7	[3.49] 88,7	[2.56] 65,1	[3.49] 88,8	M4	[1.53] 38,7
324-SS														
334	[0.28] 7,1	[0.22] 5,6	[0.28] 7,1	[2,37] 60,1	[1.55] 39,3	[2.68] 68	[1.34] 34	[0.35] 8,8	[0.63] 16	[4.10] 104,2	[3.70] 94	[4.12] 104,5	M6	[2.04] 51,8
334-SS														
344	[0.34] 8,6	[0.34] 8,6	[0.35] 8,9	[3.39] 86,1	[1.86] 47,3	[7.09] 78,6	[1.73] 49,1	[0.50] 12,7	[0.94] 23,8	[5.77] 146,6	[5.00] 126,9	[5.84] 148,4	M8	[2.46] 62,4
344-SS														
374	[0.41] 10,3	--	--	[2.38] 60,5	[1.43] 36,3	--	--	--	--	[6.60] 167,8	[6.04] 153,5	[6.04] 153,5	M10	[1,75] 44,5

Dimensions and technical information are subject to change without notice

324-R, 334-R, 344-R SERIES

Pull Action Latch Clamps | Dimensions | -R/-RSS

324-**R**
324-**RSS**
with DESTACO®
Toggle Lock
Plus™



334-**R**
334-**RSS**
with DESTACO®
Toggle Lock
Plus™



344-**R**
344-**RSS**
with DESTACO®
Toggle Lock
Plus™



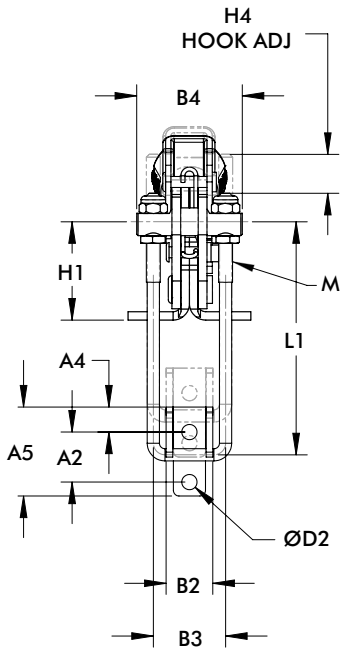

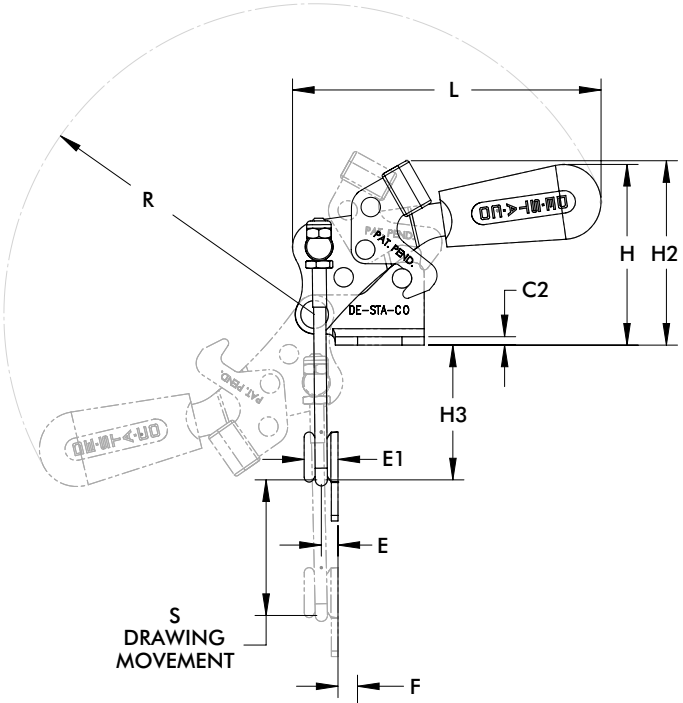

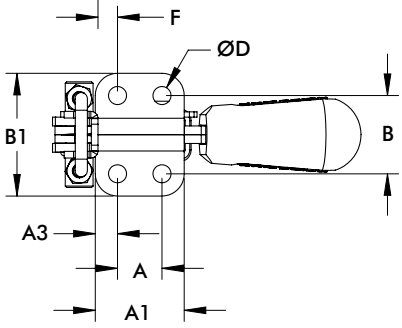

mm [INCH]

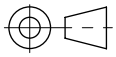

THIRD ANGLE
PROJECTION

Model	A	A1	A2	A3	A4	A5	B	B1	B2	B3	B4	C2	D
324-R	[0.50] 12,7	[1.00] 25,4	[0.56] 14,3	[0.25] 6,4	[0.28] 7,1	[1.00] 25,4	[0.88] 22,4	[1.38] 35,1	[0.52] 13,3	[0.81] 20,6	[0.44] 11,1	[0.09] 2,4	[0.20] 5,2
324-RSS													
334-R	[0.75] 19,1	[1.38] 34,9	[0.81] 20,6	[0.27] 7,0	[0.41] 10,3	[2.13] 54,0	[1.00] 25,4	[1.56] 39,6	[0.68] 17,3	[1.13] 28,6	[1.63] 41,3	[0.12] 3,1	[0.28] 7,1
334-RSS													
344-R	[1.25] 31,8	[1.94] 49,1	[1.06] 27,0	[0.34] 8,7	[0.69] 17,5	[2.13] 54	[1.44] 36,6	[2.13] 54	[1.21] 30,6	[1.75] 44,5	[2.38] 60,5	[0.16] 4	[0.34] 8,6
344-RSS													

Model	D2	E	E1	F	H	H1	H2	H3	H4	L	L1	M	S	R
324-R	[0.17] 4,4	[0.20] 5,2	[0.17] 4,4	[0.22] 5,6	[2.03] 51,6	[1.11] 28,1	[2.07] 52,7	[1.52] 38,5	[0.44] 11,1	[3.47] 88,1	[2.62] 66,6	M4	[1.53] 38,7	[3.49] 88,8
324-RSS														
334-R	[0.22] 5,6	[0.35] 8,8	[0.63] 15,9	[0.18] 4,5	[2.37] 60,2	[1.55] 39,3	[2.55] 64,7	[2.22] 56,3	[0.86] 21,8	[4.12] 104,6	[3.76] 95,6	M6	[2.04] 51,7	[4.10] 104,2
334-RSS														
344-R	[0.34] 8,7	[0.50] 12,7	[0.94] 23,9	[0.36] 9,1	[3.40] 86,5	[1.86] 47,3	[3.39] 86,0	[3.17] 80,8	[1.22] 31	[5.77] 146,5	[5.04] 128,0	M8	[2.46] 62,4	[5.90] 150
344-RSS														

324, 334, 344, 374 SERIES

Pull Action Latch Clamps | Replacement Hook Assembly | Dimensions

Replacement Hook Assembly	Used on Clamp Model	A	B	C	M	Material
324215	324, 324-R	[3.00] 76	[1.00] 25,4	[0.81] 20,6	M4 x 0.7	Steel
324215-M-25ⓘ	324-M-25 324-R-M-25	[4.00] 101,6				
324215-M-50ⓘ	324-M-50 324-R-M-50	[5.00] 127				
324215-M-100ⓘ	324-M-100 324-R-M-100	[7.00] 178				
324915	324-SS, 324-RSS	[3.00] 76				Stainless Steel
324915-M-25ⓘ	324-SS-M-25	[4.00] 101,6				
324915-M-50ⓘ	324-SS-M-50	[5.00] 127				
324915-M-100ⓘ	324-SS-M-100	[7.00] 178				
334215	334, 334-R	[4.31] 109,5	[1.50] 38,1	[1.13] 28,7	M6 x 1.0	Steel
334215-M-25ⓘ	334-M-25 334-R-M-25	[5.31] 135				
334215-M-50ⓘ	334-M-50 334-R-M-50	[6.31] 160,3				
334215-M-100ⓘ	334-M-100 334-R-M-100	[8.31] 211				
334915	334-SS, 334-RSS	[4.31] 109,5				Stainless Steel
334915-M-25ⓘ	334-SS-M-25	[5.31] 135				
334915-M-50ⓘ	334-SS-M-50	[6.31] 160,3				
334915-M-100ⓘ	334-SS-M-100	[8.31] 211				
344215	344, 344-R	[5.81] 147,5	[2.25] 57,2	[1.75] 44,5	M8 x 1.25	Steel
344215-M-25ⓘ	344-M-25 344-R-M-25	[6.81] 173				
344215-M-50ⓘ	344-M-50 344-R-M-50	[7.81] 198,5				
344215-M-100ⓘ	344-M-100 344-R-M-100	[9.81] 249,2				
344915	344-SS, 344-RSS	[5.81] 147,5				Stainless Steel
344915-M-25ⓘ	344-SS-M-25	[6.81] 173				
344915-M-50ⓘ	344-SS-M-50	[7.81] 198,5				
344915-M-100ⓘ	344-SS-M-100	[9.81] 249,2				
374215	374	[6.50] 165	[3.25] 82,6		M10 x 1.50	Steel
374215-M-25ⓘ	374-M-25	[7.50] 190,5				
374215-M-50ⓘ	374-M-50	[8.50] 216				
374215-M-100ⓘ	374-M-100	[10.50] 266,5				

Hook assemblies are supplied with (2) jam nuts and (2) locknuts.

ⓘ This item is available upon request.

Replacement Thumb Control Lever	Used on Clamp Model
324-ZB1	324, 324-SS
334-ZB1	334, 334-SS
344-ZB1	344, 344-SS
375-ZB1	374



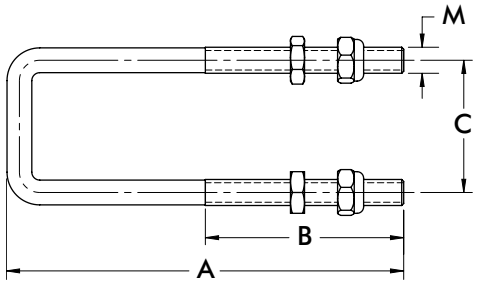

Dimensions and technical information are subject to change without notice

301, 311 SERIES

Pull Action Latch Clamps | Product Overview

Features:

- Fixed stop automatically limits handle travel at various clamping positions once the clamp is installed
- Model 301 available in stainless steel as 301-**SS**
- 5 handle colors - see page MC-PRO-7 for details

Applications:

- Molding
- Closures for doors, lids, covers
- Assembly

301
301-**SS**



311



Color Handles

Available on models in this series that use standard red handles.* Add **-Y**, **-G**, **-B**, **-K** to end of model number.

*Excludes dipped handles.



Technical Information | Holding Capacities | Dimensions

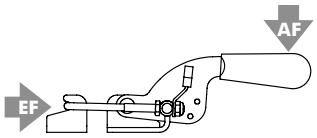

Model	Max. Holding Capacity	Weight	EF:AF	Drawing Movement
301	1670 N [375 lbf]	[0.70 lbs] 0,32 kg	29:1	101,6 [4.00]
301-SS	2000 N [450 lbf]			
311	5340 N [1200 lbf]	0,53 kg [1.16 lbs]	31:1	85,9 [3.38]

EF = Exerting Force, **AF** = Applied Force

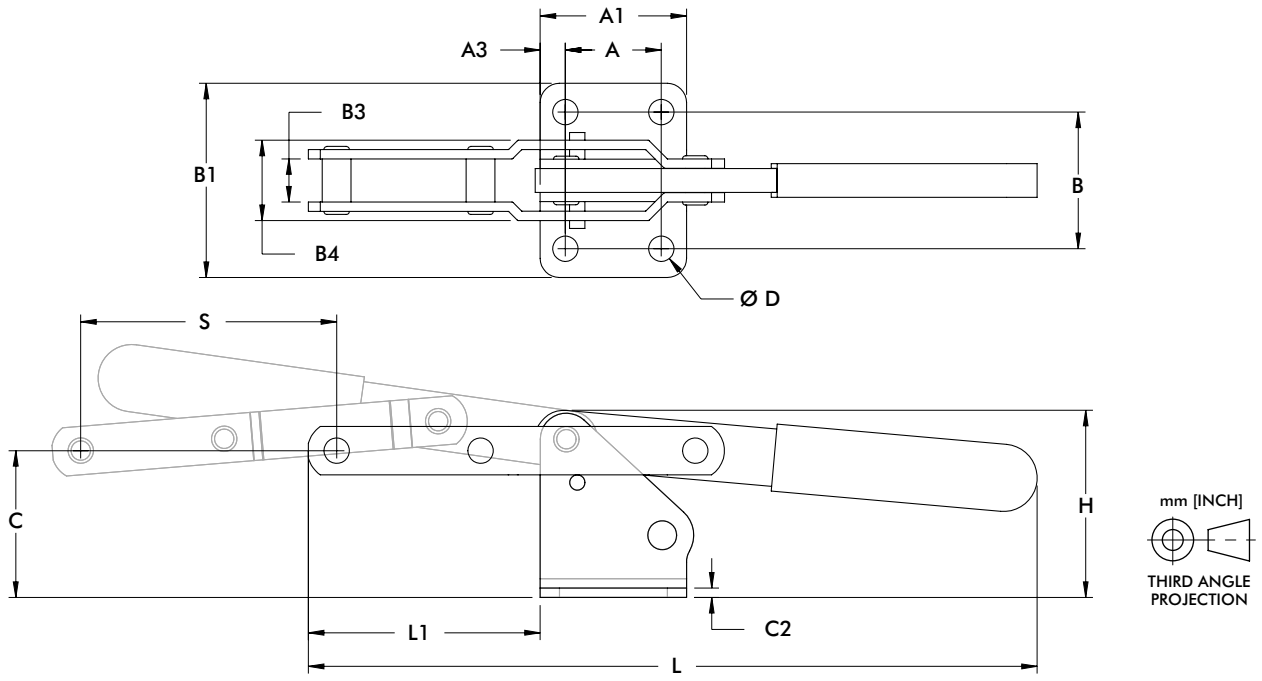

Model	A	A1	A3	B	B1	B3	B4	C	C2	ØD	H	L	L1	S
301	[0.75] 19,1	[1.38] 35,1	[0.32] 8	[1.25] 31,8	[1.75] 44,5	[0.56] 14,1	[1.04] 26,4	[1.52] 38,6	[0.12] 3,1	[0.28] 7,1	[1.91] 48,4	[8.33] 211,5	[3.04] 77,1	[4.00] 101,6
301-SS														
311	[1.25] 31,8	[1.91] 48,4	[0.33] 8,3	[1.78] 45,2	[2.53] 64,3	[0.56] 14,3	[1.05] 26,6	[1.91] 48,6	[0.12] 3,1	[0.33] 8,4	[2.44] 61,9	[9.49] 241,2	[3.02] 76,7	[3.88] 85,9

3011 SERIES

Pull Action Latch Clamps | Product Overview

Features:
- Heavy duty cast steel or stainless steel construction with ergonomic handle
- Replaceable stainless steel pivot pins

Applications:
- Molding
- Closures for doors, lids, covers
- Assembly

3011



Technical Information | Holding Capacities | Dimensions

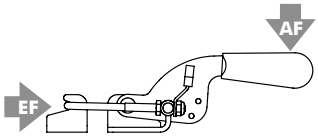

Model	Max. Holding Capacity	Weight	EF:AF	Drawing Movement
3011	8900 N [2000 lbf]	0,91 kg [2.00 lbs]	31:1	76,2 [3.00]

EF = Exerting Force, **AF** = Applied Force

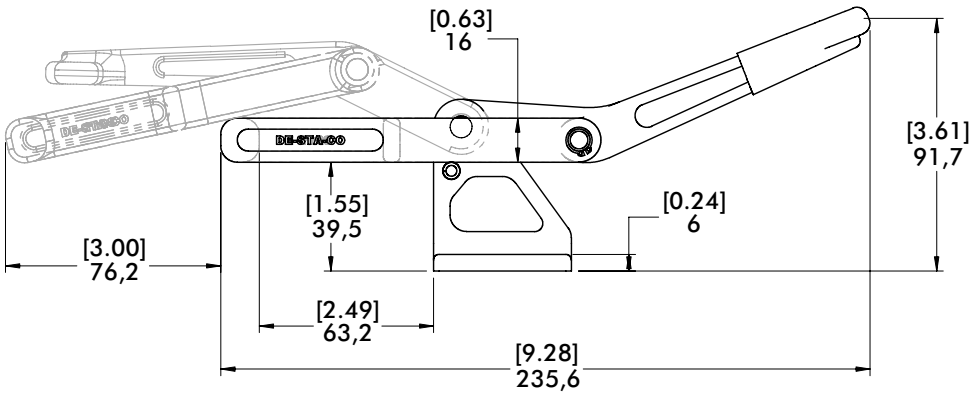

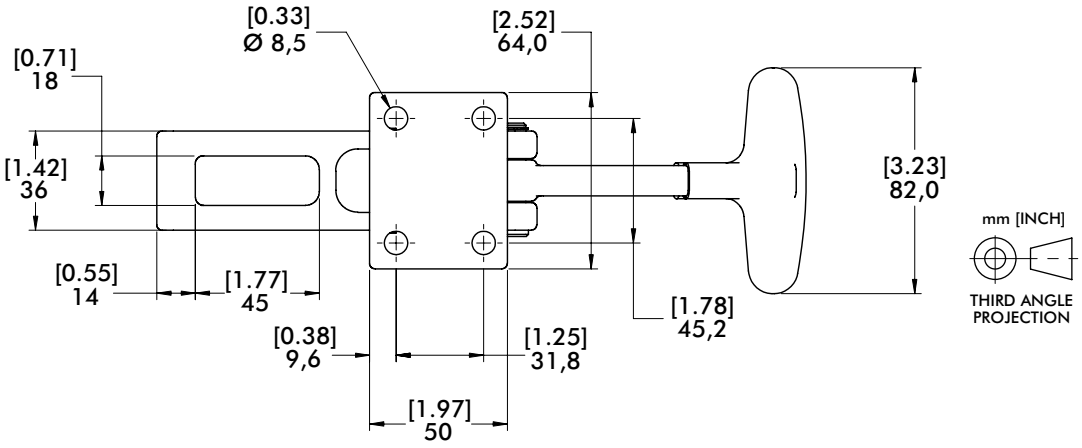

Dimensions and technical information are subject to change without notice

353 SERIES

Pull Action Latch Clamps | Dimensions

Features:
- Heavy duty cast steel clamps are designed to withstand the harshest environments
- Ideally suit for parting line clamping of rotational molds
- Replaceable stainless steel pivot pins

Applications:
- Molding
- Closures for doors, lids, covers

Also Available:
- Keeper plate
- Tapered bolt assembly

353-35



353-65



Technical Information | Holding Capacities

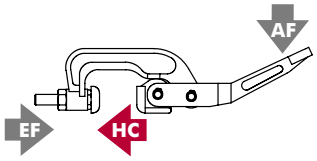

Model	Max. Holding Capacity	Weight	EF:AF	Drawing Movement	L	K	Keeper Plate (included)	Tapered Bolt Assembly (included)
353-35	[2800 lbf] 12460 N	[2.10 lbs] 0,95 kg	23:1	12 [0.47]	[9.50] 241,5	[1.38] 35	353004	353908
353-65	[2100 lbf] 9350 N	[2.30 lbs] 1,04 kg	27:1		[10.69] 271,5	[2.56] 65	353004	

EF = Exerting Force, **AF** = Applied Force

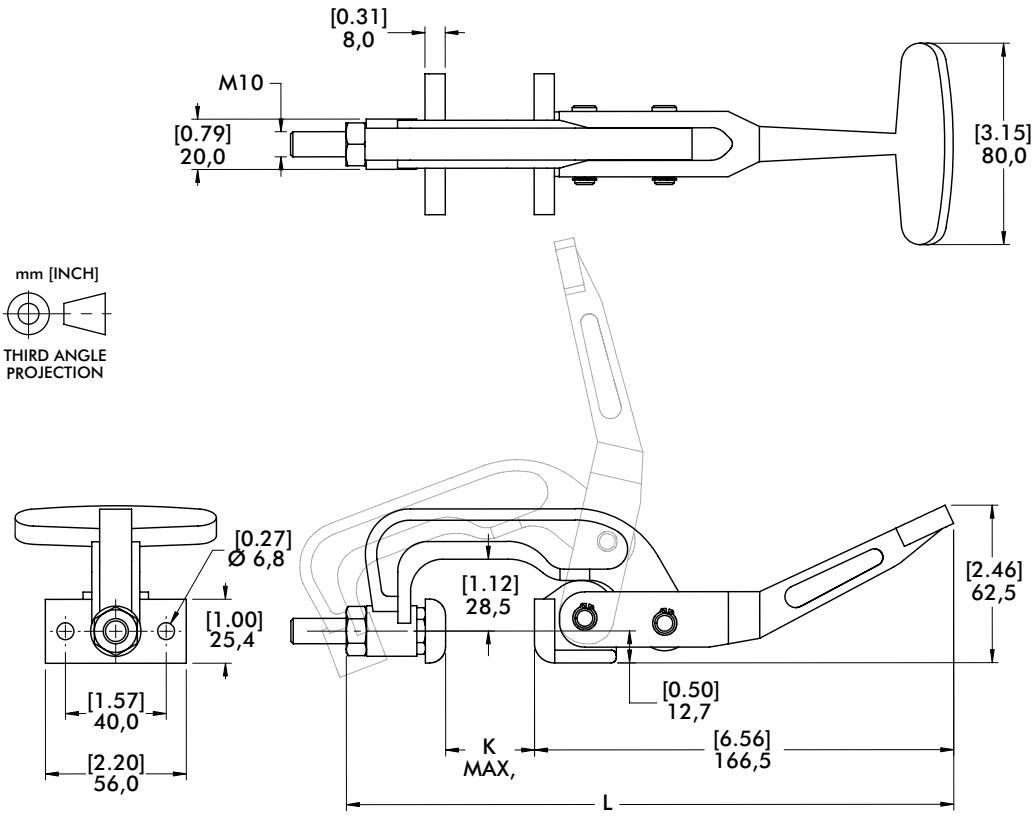

325 SERIES

Squeeze Action Plier Clamps | Product Overview

Features:
- Designed for attachment by welding or using mounting holes
- Available in stainless steel as -**SS** version

Applications:
- Molding
- Closures for doors, lids, covers

Also Available:
See page MC-ACC-1 for accessories

325,
325-**SS**



Color Handles
Available on this model. Add **-Y**, **-G**, **-B**, **-K** to end of model number.



Technical Information | Holding Capacities

Model	Max. Holding Capacity	Weight	Jaw Opening	Spindle (Supplied)
325	[800 lbf] 3560 N	[1.18lb] 0,54kg	90°	325203-M
325-SS				325943-M

Dimensions

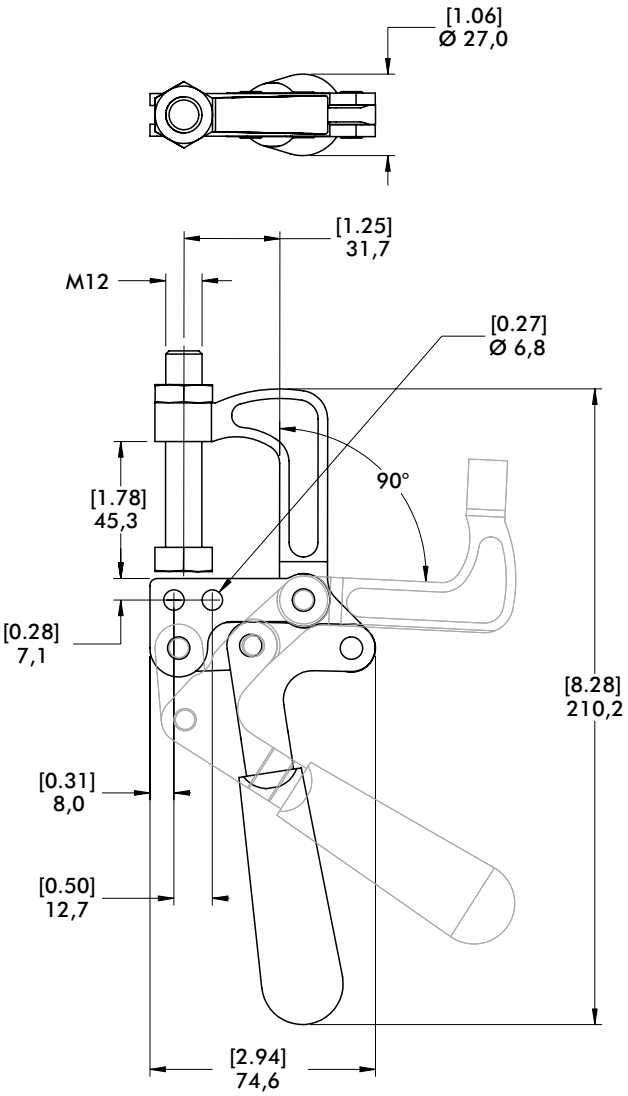

mm [INCH]

THIRD ANGLE PROJECTION

Dimensions and technical information are subject to change without notice

345 SERIES

Squeeze Action Plier Clamps | Product Overview

Features:
- Designed for welding or bolting at any point along the mounting bar
- Includes M10 swivel foot spindle
- Model 345-G includes sliding jaw with spindle

Applications:
- Welding fixtures
- Assembly fixtures
- Closures for doors, lids, covers

Also Available:
See page MC-ACC-1 for accessories

345,
345-G ⓘ



Color Handles
Available on this model:*
Add **-Y**, **-G**, **-B**, **-K** to end of model number.
*Excludes locking lever.



Technical Information | Holding Capacities

Model	Max. Holding Capacity	Weight	Jaw Opening	Spindle (Supplied)
345	[800 lbf] 3560 N	[2.69 lbs] 1,22 kg	85°	468206-M
345-G ⓘ		[3.09 lbs] 1,40 kg		468206-M 210203-M

ⓘ This item is available upon request.

Dimensions

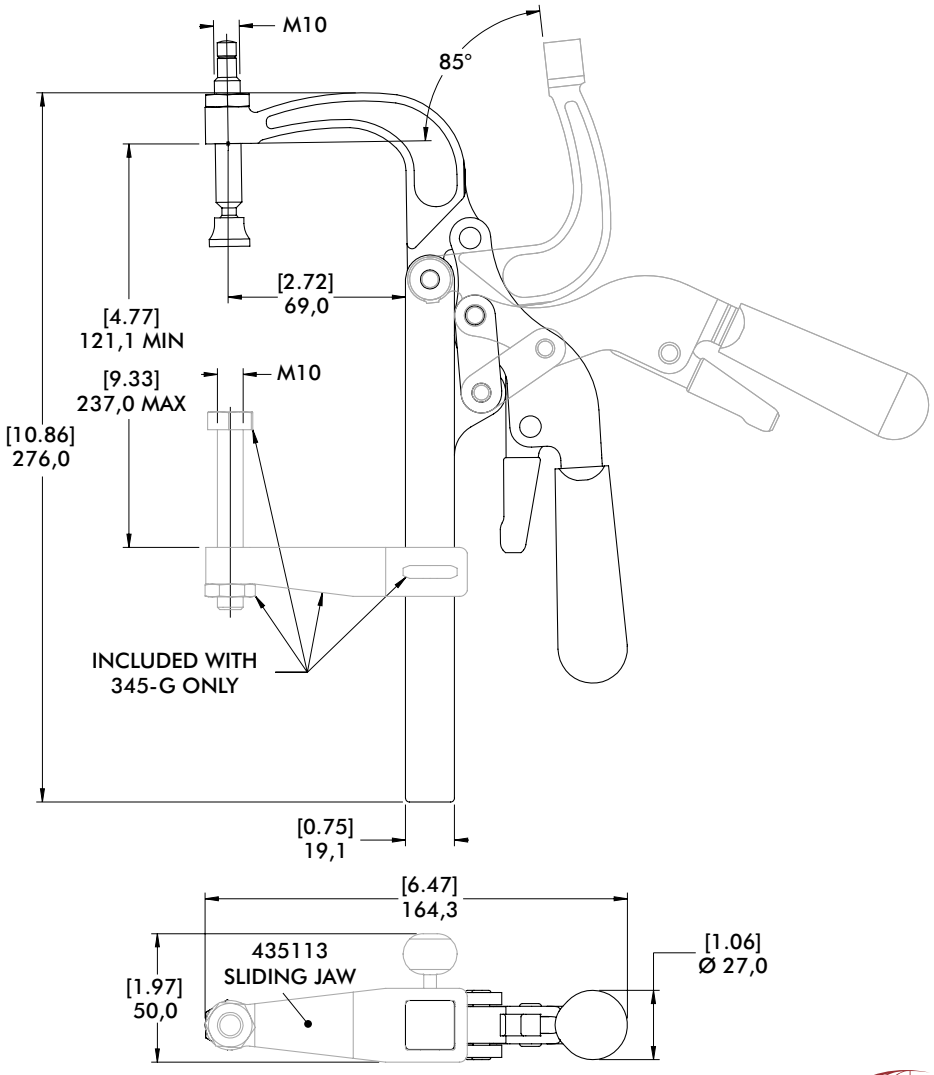

mm [INCH]
THIRD ANGLE PROJECTION

424, 441 SERIES

Squeeze Action Plier Clamps | Product Overview

Features:
- Compact clamps with forged alloy steel construction for high strength
- Versions ending with (-2) are supplied with two adjustable spindles

Applications:
- Welding
- Assembly

Also Available:
See page MC-ACC-1 for accessories

424



424-2
With Two Adjustable Spindles



441



441-2
With Two Adjustable Spindles



Technical Information | Holding Capacities | Dimensions

Model	Max. Holding Capacity	Weight	(K5) Maximum Clamping Thickness	Spindle (Supplied)
424	[200 lbf] 900 N	[0.31 lbs] 0,14 kg	16 [0.63]	424208-M
424-2			7,4 [0.29]	(2X) 431208-M
441	[350 lbf] 1560 N	[0.63 lbs] 0,29 kg	23,3 [1.03]	441203-M
441-2			20,8 [0.82]	(2X) 461203-M

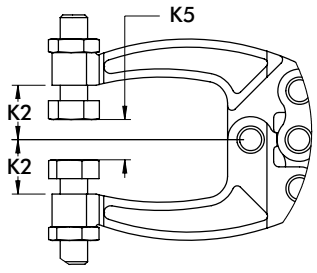

MODEL 424-2 & 441-2 AS SHOWN

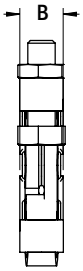

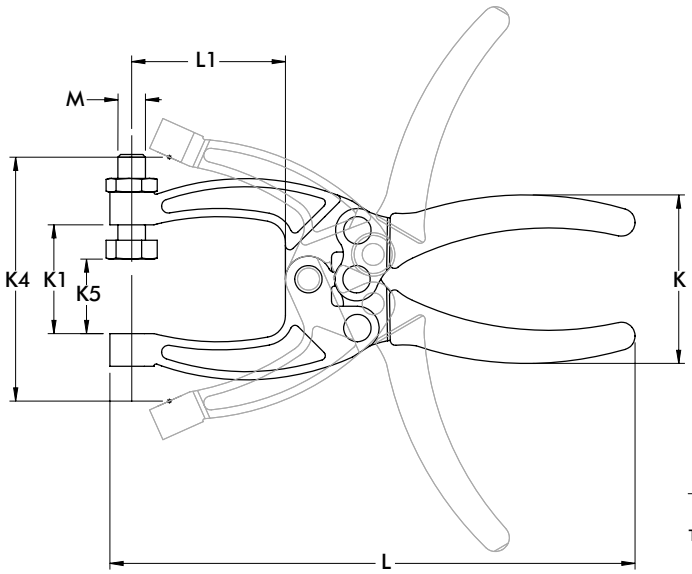

mm [INCH]

THIRD ANGLE PROJECTION

Model	B	K	K1	K2	K4	L	L1	M
424	[0.50] 12.8	[1.91] 48.5	[1.00] 25.4	[0.50] 12.7	[2.06] 52.3	[4.63] 117.6	[1.08] 27.4	M6
424-2								
441	[0.50] 12.7	[2.07] 52.5	[1.25] 31.8	[0.63] 15.9	[2.80] 71.2	[6.03] 153.1	[1.77] 44.9	M8
441-2								

Dimensions and technical information are subject to change without notice

431 SERIES

Squeeze Action Plier Clamps | Product Overview

Features:
- Tempered spring steel jaws provide exceptional jaw depth

Applications:
- Assembly
- Gluing, soldering

Also Available:
See page MC-ACC-1 for accessories

431



Technical Information | Holding Capacities | Dimensions

Model	Max. Holding Capacity	Weight	(K5) Maximum Clamping Thickness	Spindle (Supplied)
431	[100 lbf] 400 N	[0.31 lbs] 0,14 kg	6,8 [0.27]	424208-M

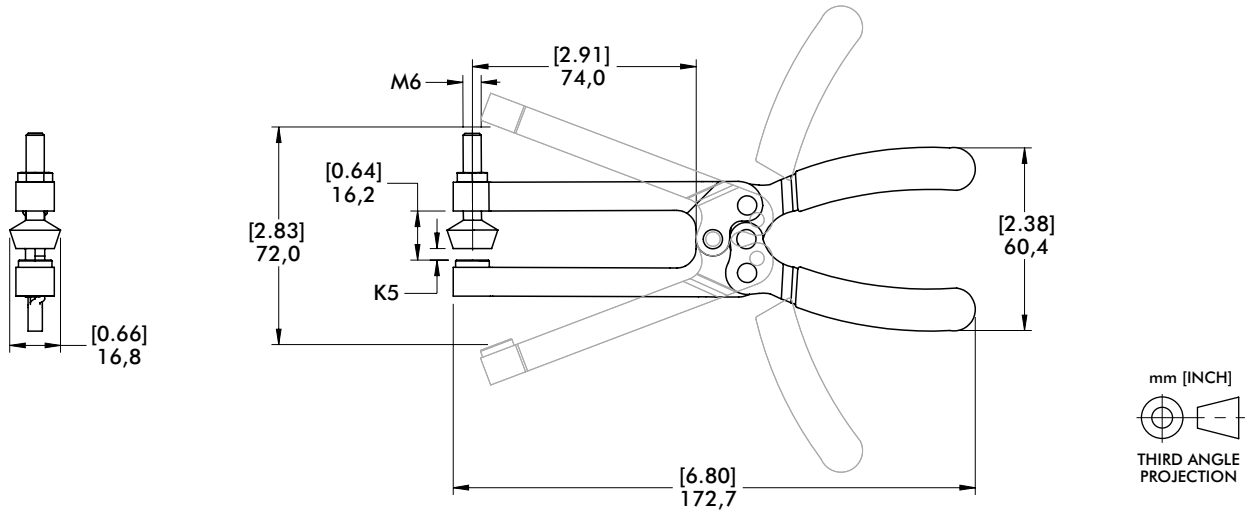

460, 480 SERIES

Squeeze Action Plier Clamps | Product Overview

Features:
- Drop forged alloy steel components for exceptional strength
- Two way trigger release allows for fast and easy opening of clamp

Applications:
- Assembly
- Welding

Also Available:
See page MC-ACC-1 for accessories

462



462-2
With Two Adjustable Spindles



463



482



484



486



Technical Information | Holding Capacities

Model	Max. Holding Capacity	Weight	Maximum Clamping Thickness	Spindle (Supplied)
462	[700 lbf] 3110 N	0,51 kg [1.13 lbs]	29,5 [1.16]	468206-M
462-2			30,5 [1.20]	(2X) 491203-M
463		0,54 kg [1.19 lbs]	54,2 [2.13]	468206-M 210203-M
482	[1200 lbf] 5340 N	0,79 kg [1.75 lbs]	29,5 [1.16]	468206-M
484		0,91 kg [2.00 lbs]	76,5 [3.01]	468206-M 210203-M
486	4450 N [1000 lbf]	1,05 kg [2.31 lbs]	138,4 [5.45]	(2X) 240203-M

Dimensions and technical information are subject to change without notice

Squeeze Action Plier Clamps | Dimensions

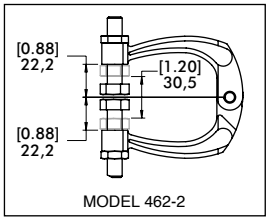

MODEL 462-2

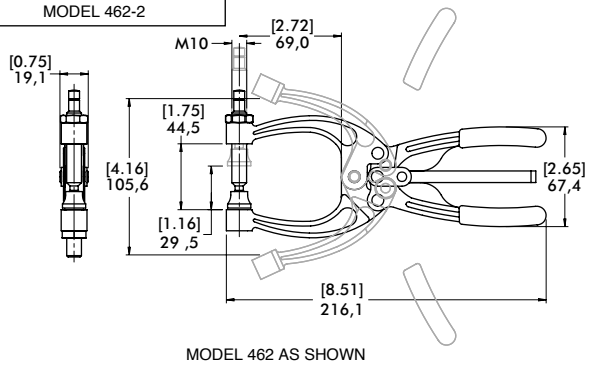

MODEL 462 AS SHOWN

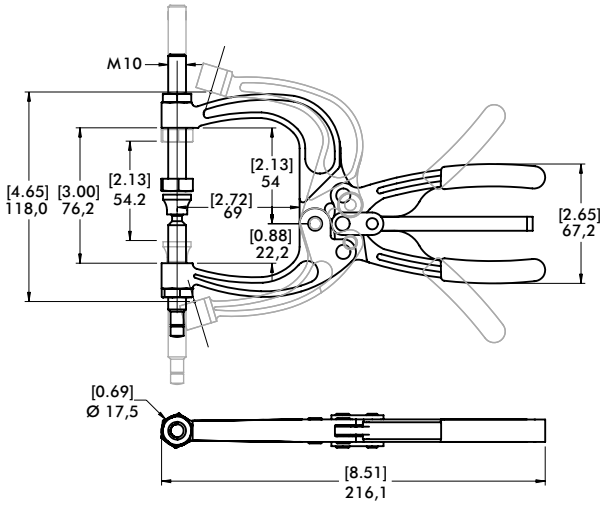

MODEL 463 AS SHOWN

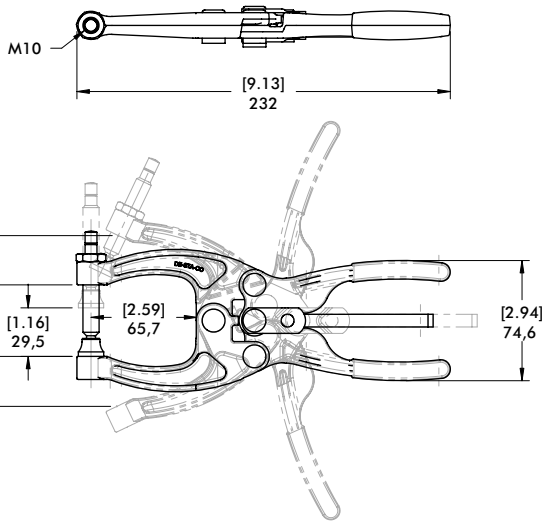

MODEL 482 AS SHOWN

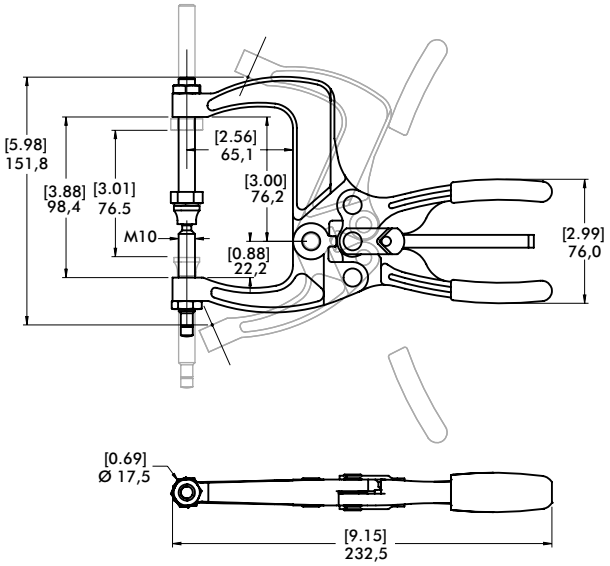

MODEL 484 AS SHOWN

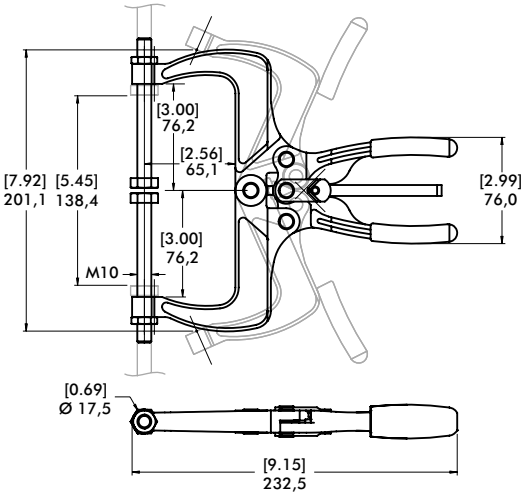

MODEL 486 AS SHOWN

mm [INCH]

THIRD ANGLE PROJECTION

MANUAL CLAMPING ACCESSORIES

Manual Clamping Accessory Overview



Flat-Tip Bonded Neoprene Spindle – Inch



Large Diameter Padded Swivel Foot Spindle – Inch



Neoprene Caps



Special Neoprene Caps



Metric Flat-Tip Bonded Neoprene Spindle – Metric



Swivel Foot Spindle



Polyurethane Caps



Cone-Tip Polyurethane Caps



Round Bonded Neoprene Spindle – Metric



Hex Head Spindle



Bolt Retainers



Flanged Washers



Cone-Tip Bonded Neoprene Spindle – Metric



Plunger-matic Assemblies



Adapters and Extensions

Dimensions and technical information are subject to change without notice

Flat-Tip Bonded Neoprene Spindle – Inch

- Black neoprene, hardness: 70-80 Shore A
- Temperature Range: -20°C to 100°C [-22°F to 212°F]
- Oil resistant, LABS (silicone) free
- Includes jam nuts
- Stainless steel versions available upon request

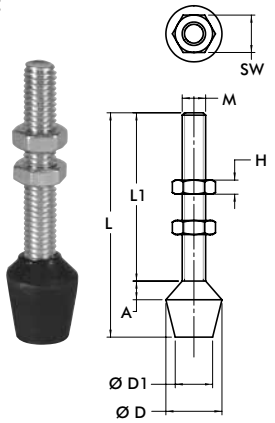

Part No.	M	L	L1	SW	H	A	ØD	ØD1
102208	#8-32	[1.25] 31,8	[0.94] 23,8	[0.34] 8,7	[0.13] 3,2	[0.06] 1,6	[0.56] 14,3	[0.44] 11,1
105208		[1.00] 25,4	[0.69] 17,4					
201208	#10-32	[1.38] 35,1	[1.01] 25,5	[0.38] 9,5		[0.13] 3,2		
202208	1/4-20	[1.63] 41,4	[1.08] 27,4	[0.44] 11,1	[0.16] 4	[0.12] 3	[0.63] 16	[0.47] 12
215208		2.13] 54,1	[1.58] 40,1					
424208		[1.50] 38,1	[1.12] 28,5			[0.13] 3,3	[0.66] 16,8	[0.50] 12,7
431208		[1.00] 25,4	[0.62] 15,8					
225208	5/16-18	[2.25] 57,2	[1.54] 39,1	[0.50] 12,7	[0.19] 4,8	[0.20] 5	[0.83] 21	[0.55] 14
507208		[3.00] 76,2	[2.29] 58,2					
240208	3/8-16	[3.25] 82,6	[2.31] 58,5	[0.56] 14,3	[0.22] 5,6		[1.02] 26	[0.79] 20
527208		[3.50] 88,9	[2.50] 63,5				[0.88] 22,2	[0.63] 16
235208		[5.75] 146,1	[4.77] 121,1				[1.02] 26	[0.79] 20
247208	1/2-13	[3.87] 98,3	[2.73] 69,3	[0.75] 19,1	[0.31] 7,9	[0.28] 7	[1.18] [30]	[0.95] 24
267208	5/8-11	[5.00] 127	[3.63] 92,1	[0.94] 23,8	[0.38] 9,5	[0.38] 9,5	[1.38] 35,1	[1.00] 25,4

Flat-Tip Bonded Neoprene Spindle – Metric

- Red neoprene, hardness: 80-85 Shore A
- Temperature Range: -20°C to 100°C [-22°F to 212°F]
- Oil resistant, LABS (silicone) free
- Includes jam nuts

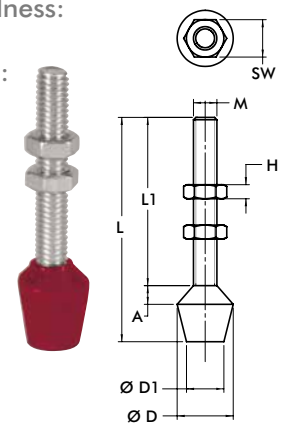

Part No.	M	L	L1	SW	H	A	ØD	ØD1
431208-M	M6	[1.00] 25,4	[0.6] 15,8	[0.39] 10	[0.13] 3,2	[0.13] 3,3	[0.66] 16,8	[0.66] 16,8
424208-M		[1.63] 41,3	[1.25] 31,7					
202208-M		[1.73] 44	[1.18] 30			[0.12] 3	[0.63] 16	[0.47] 12
215208-M		[2.13] 54	[1.57] 40					
225208-M	M8	[2.09] 53	[1.38] 35	[0.51] 13	[0.16] 4	[0.20] 5	[0.83] 21	[0.55] 14
2007208-M		[2.48] 63	[1.77] 45					
507208-M		[3.27] 83	[2.56] 65					
240208-M	M10	[3.11] 79	[2.17] 55	[0.67] 17	[0.20] 5		[1.02] 26	[0.78] 20
235208-M		[4.72] 120	[3.74] 95					
247208-M	M12	[4.02] 102	[2.87] 73	[0.75] 19	[0.24] 6	[0.28] 7	[1.18] 30	[0.94] 24

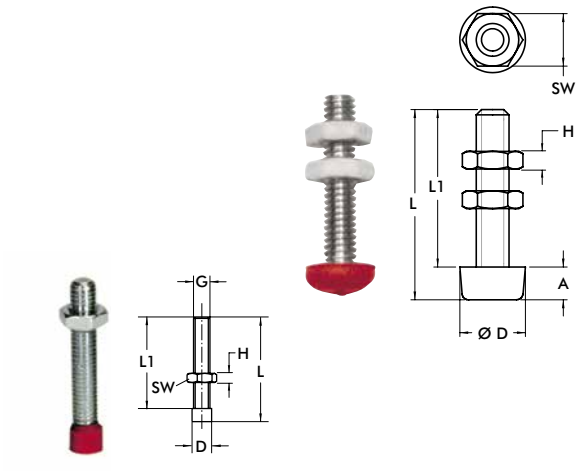

Part No.	M	L	L1	SW	H	A	ØD
205208-M	M4	[0.87] 22	[0.79] 20	[0.28] 7	[0.09] 2,2	[0.11] 2,8	[0.32] 8
201208-M		[1.26] 32	[1.18] 30				
305208-M	M5	[1.14] 29	[0.98] 25	[0.32] 8	[0.11] 2,7	[0.20] 5	[0.39] 10
213208-M		[1.34] 34	[1.18] 30				
2013208-M		[1.54] 39	[1.38] 35				
307208-M	M8	[1.69] 43		[0.51] 13	[0.16] 4	[0.35] 9	[0.75] 19

Part No.	D	L	L1	ØG
213208-M-L ⓘ	[0.24] 6	[1.34] 34	[1.18] 30	M5

ⓘ Item is available upon request.

SPINDLES

Manual Clamping Accessories | Technical Information | Dimensions

Cone-Tip Bonded Neoprene Spindle – Inch

- Black neoprene, hardness: 70-80 Shore A
- Temperature Range: -20°C to 100°C [-22°F to 212°F]
- Oil resistant, LABS (silicone) free
- Includes jam nuts



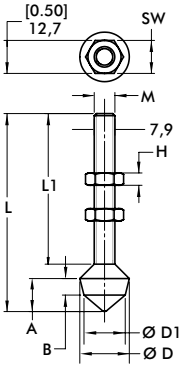

Part No.	M	L	L1	SW	H	A	B	ØD	ØD1
305208	#10-32	[1.50] 38,1	[1.00] 25,4	[0.38] 9,5	[0.13] 3,3	[0.38] 9,5	[0.19] 4,8	[0.56] 14,2	[0.44] 11,2
213208	1/4-20	[2.25] 57,2	[1.56] 39,6	[0.44] 11,2	[0.16] 40,6	[0.50] 12,7	[0.25] 6,4	[0.75] 19,1	[0.63] 16
509208	5/16-18	[3.00] 76,2	[2.28] 57,9	[0.50] 12,7	[0.19] 4,8				
519208		[5.50] 139,7	[4.75] 120,7						
210208	3/8-16	[3.50] 88,9	[2.50] 63,5	[0.56] 14,2	[0.23] 5,8	[0.75] 19,1	[0.41] 10,4	[0.88] 22,4	[0.75] 19,1

Large Diameter Padded Swivel Foot Spindle-Inch

- White neoprene, hardness: 70-80 Shore A
- Temperature Range: -40°C to 105°C [-40°F to 220°F]
- Non-marking neoprene
- Includes jam nuts



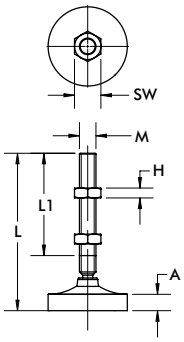

Part No.	M	L	L1	SW	H	A	ØD	Swivel Angle
207209	1/4-20	[2.56] 65	[1.56] 39,6	[0.44] 11,2	[0.16] 4	[0.31] 8	[1.00] 25,4	14°
507209	5/16-18	[2.98] 75,7	[1.94] 49,3	[0.50] 12,7	[0.19] 4,8		[1.50] 38,1	24°
210209	3/8-16	[3.56] 90,4	[2.44] 62	[0.56] 14,2	[0.23] 5,8		[2.00] 50,8	26°

Plunger-matic Assemblies

- For use with Straight Line Action clamps
- Internal compression spring compensates for variations in material thickness
- Zinc plated
- Includes jam nut



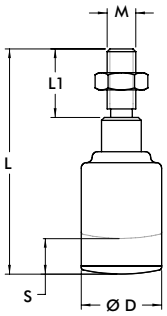

Part No.	M	L	L1	ØD	Max. Compression S	Spring Constant [lbf./in] N/mm	Max. Force [lbf.] N
905	5/16-18	[2.50] 63,5	[0.75] 19,1	[0.88] 22,2	[0.19] 4,8	[750] 131	[135] 600
905-M	M8						
920	3/8-16	[3.63] 92,2	[1.13] 28,6		[0.38] [9,6]	[822] 144	[308] 1370
920-M	M10						

Swivel Foot Spindle

- Includes jam nuts



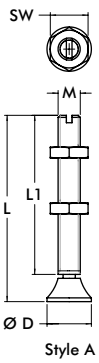

Style A

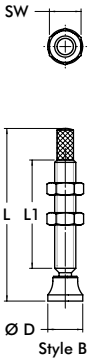

Style B

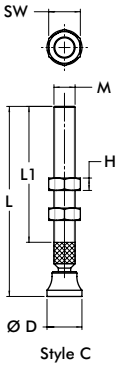

Style C

Part No.	M	Style	L	L1	SW	H	ØD	Swivel Angle
207206-M	M6	A	[2.44] 62	[2.13] 54	[0.39] 10	[0.13] 3,2	[0.47] 12	30°
507206-M	M8		[2.87] 73	[2.46] 62,5	[0.51] 13	[0.16] 4	[0.63] 16	
468206-M	M10	B	[3.06] 77,8	[2.00] 50,8	[0.67] 17	[0.20] 5		24°
210206-M		A	[3.31] 84	[2.80] 71			[0.79] 20	30°
250206-M	M12		[4.72] 120	[4.13] 105	[0.75] 19	[0.24] 6	[0.98] 25	
207206	1/4-20	C	[2.38] 60,5	[1.56] 39,6	[0.44] 11,2	[0.16] 4	[0.50] 12,7	14°
507206	5/16-18		[2.75] 69,9	[1.94] 49,3	[0.50] 12,7	[0.19] 4,8	[0.56] 14,2	24°
468206	3/8-16	B	[3.06] 77,7	[1.92] 48,8	[0.56] 14,2	[0.23] 5,8	[0.63] 16	
210206		C	[3.38] 85.9	[2.41] 61,2				26°
250206	1/2-13		[4.63] 117,6	[3.44] 87,4	[0.75] 19,1	[0.31] 7,9	[1.00] 25,4	24°

Dimensions and technical information are subject to change without notice

Hex Head Spindle – Stainless Steel

- Includes Plain hexagonal head
- Includes Fully threaded
- Includes Stainless steel, type 303
- Includes jam nuts

Part No.	M	L	L1	SW	H	Part No.	M	L	L1	SW	H
205943-M	M4	[0.89] 22	[0.79] 20	[0.28] 7	[0.09] 2,2	**205943**	#8-32	[0.86] 21,8	[0.75] 19,1	[0.25] 6,4	[0.13] 3,2
201943-M	M5	[1,32] 33,5	[1.18] 30	[0.31] 8	[0.11] 2,7	**201943**	#10-32	[1,37] 34,8	[1,37] 34,8	[0.31] 8	
202943-M	M6	[1.73] 42,4	[1.57] 40	[0.39] 10	[0.13] 3,2	**202943**	1/4-20	[1.67] 42,4	[1.50] 38,1	[0.44] 11,1	[0.16] 4
207943-M	M8	[2.77] 70.3	[2.56] 65	[0.51] 13	[0.16] 4	**207943**	5/16-18	[2.72] 69	[2.50] 63,5	[0.50] 12,7	[0.19] 4,8
						237943	3/8-16	[2.75] 69,9		[0.56] 14,2	[0.22] 5,6

Hex Head Spindle

- Plain hexagonal head
- Fully threaded
- Zinc plated
- Includes jam nuts

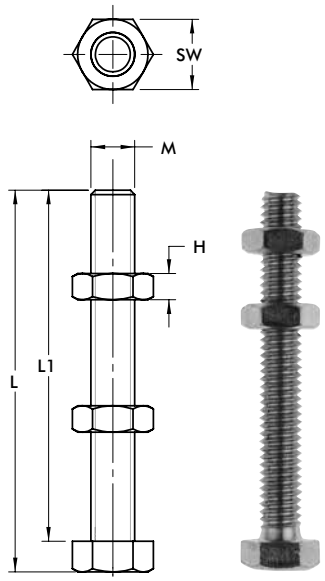

Part No.	M	L	L1	SW	H	Part No.	M	L	L1	SW	H
205203-M	M6	[1.93] 49	[1.77] 45	[0.39] 10	[0.13] 3,2	**205203**	1/4-20	[1.92] 48,8	[1.75] 44,5	[0.44] 11,2	[0.16] 4
461203-M	M8	[1.20] 30,5	[0.98] 25	[0.51] 13	[0.16] 4	**202203**		[3.17] 80,5	[3.00] 76,2		
207203-M		[2.97] 75,5	[2.76] 70			**461203**	5/16-18	[1.22] 31	[1.00] 25,4	[0.50] 12,7	[0.19] 4,8
491203-M	M10	[1.85] 47	[1.57] 40	[0.67] 17	[0.20] 5	**441203**		[1.97] 50	[1.75] 44,5		
210203-M		[3.03] 77	[2.76] 70			**207203**		[2.72] 69,1	[2.50] 63,5		
240203-M		[4.21] 107	[3.94] 100			**491203**	3/8-16	[1.75] 44,5	[1.50] 38,1	[0.56] 14,2	[0.23] 5,8
220203-M	M12	[3.46] 88	[3.15] 80	[0.75] 19	[0.24] 6	**210203**		[3.00] 76,2	[2.75] 69,9		
267203-M	M16	[5.12] 130	[4.72] 120	[0.94] 24	[0.28] 7	**240203**		[4.25] 108	[4.00] 101,6		
105203*	#8-32	[0.86] 21,8	[0.75] 19,1	[0.25] 6,4	[0.13] 3,3	**527203**		[5.25] 133,4	[5.00] 127		
305203	#10-32	[1.12] 28,4	[1.00] 25,4	[0.31] 8		**325203**	1/2-13	[2.84] 72,1	[2.50] 63,5	[0.75] 19,1	[0.31] 7,9
						220203		[3.34] 84,8	[3.00] 76,2		
						250203	5/8-11	[4.42]	[4.00] 101,6	[0.38] 9,5	[0.38] 9,5

*Material: nylon

SPINDLE CAPS

Manual Clamping Accessories | Technical Information | Dimensions

Neoprene Caps

- Slip on head of hex-head spindles
- Hardness: 60-70 Shore A
- Temperature range: -40°C to 105°C [-40°F to 220°F]



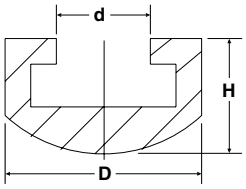

Part No.	D	d	H	For Spindle Diameter
215119	[0.63] 16	[0.25] 6,35	[0.44] 11,1	M6 or 1/4
225119	[0.75] 19,1	[0.31] 8	[0.50] 12,7	M8 or 5/16
235119	[0.88] 22,3	[0.38] 9,7	[0.53] 13,5	3/8

Special Neoprene Caps

- Slip on threaded spindle rod
- Hardness: 60-70 Shore A
- Temperature range: -40°C to 10[illegible]°C [-40°F to 220°F]



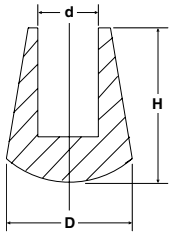

Part No.	D	d	H	For Spindle Diameter
424107	[0.44] 11,1	[0.22] 5,6	[0.44] 11,1	M6 or 1/4
235110	[0.72] 18,3	[0.34] 8,6	[0.88] 22,3	M10 or 3/8

Polyurethane Caps

- Flat tip, internally threaded
- Hardness: 80 Shore A
- Temperature range: -70°C to 95°C [-90°F to 200°F]



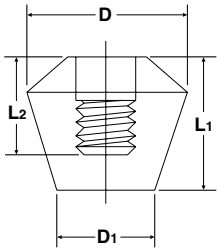

Part No.	D	D1	L1	L2	For Spindle Diameter	Color
215219	[0.79] 20	[0.50] 12,7	[0.69] 17,5	[0.50] 12,7	1/4-20	Black
215219-M					M6 x 1.0	Red
225219					5/16-18	Black
225219-M					M8 x 1.25	Red
235219	[0.81] 20,5	[0.63] 16	[0.88] 22,3	[0.63] 16	3/8-16	Black
235219-M					M10 x 1.5	Red

Polyurethane Caps – Cone-tip

- Cone tip, internally threaded
- Hardness: 80 Shore A
- Temperature range: -70°C to 95°C [-90°F to 200°F]



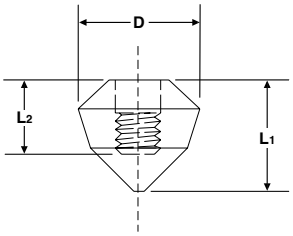

Part No.	D	L1	L2	For Spindle Diameter
215319	[0.81] 20,5	[0.75] 19,1	[0.50] 12,7	1/4
225319				5/16
235319		[0.94] 23,9	[0.63] 16	3/8

Dimensions and technical information are subject to change without notice

Bolt Retainers –

- For use with clamps featuring U-bar and open bar clamping arms

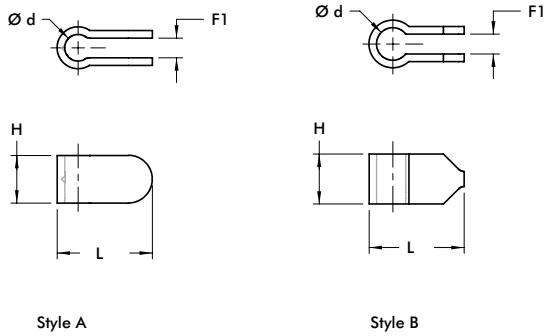

Part No.	L	H	Ød	F1	For Spindle Diameter	Style
207105	[1.23] 31,3	[0.63] 16	[0.34] 8,7	[0.28] 7,1	M8 or 5/16	A
207105-M	[1.26] 32		[0.32] 8,2	[0.24] 6		B
210114	[1.50] 38,1	[0.75] 19,1	[0.53] 13,5	[0.31] 8	M10 or 3/8	A
210114-M	[1.49] 38	[0.78] 20	[0.51] 13			B
247110	[1.63] 41,4	[0.88] 22,3	[0.56] 14,2	[0.38] 9,7	M12 or 1/2	A
247110-M	[1.61] 41	[0.87] 22,2	[0.57] 14,4			B
250121	[1.88] 47,8	[1.00] 25,4	[0.64] 16,3		M12 or 1/2	A
2002115-E	[0.97] 24,6	[0.50] 12,7	[0.26] 6,6	[0.23] 5,8	M6 or 1/4	
2007115-E	[1.26] 32	[0.75] 19,1	[0.34] 8,6		M8 or 5/16	B
2010115-E	[1.58] 40,1	[1.13] 28,7	[0.41] 10,4	[0.32] 8,1	M10 or 3/8	

Flanged Washers –

- For use with clamps featuring U-bar and open bar clamping arms
- Zinc plated

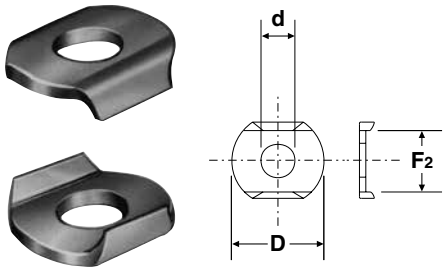

Part No.	ØD	Ød	F2	For Spindle Diameter
105106	[0.44] 11,2	[0.17] 4,3	[0.33] 8,3	M4 or #8
102111	[0.56] 14,2	[0.20] 5,1	[0.38] 9,6	M5 or #10
215105	[0.69] 17,5	[0.26] 6,7	[0.50] 12,7	M6 or 1/4
507107	[0.88] 22,4	[0.33] 8,4	[0.59] 15	M8 or 5/16
235106	[1.00] 25,4	[0.41] 10,5	[0.75] 19,1	M10 or 3/8
247109	[1.26] 32	[0.53] 13,5	[0.91] 23,2	M12 or 1/2
267102	[1.44] 36,5	[0.66] 16,8	[1.03] 26,2	M16 or 5/8

Flanged Washers-Stainless Steel

- For use with clamps featuring U-bar and open bar clamping arms

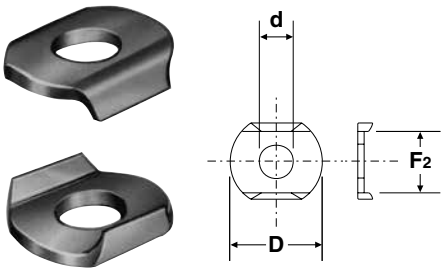

Part No.	ØD	Ød	F2	For Spindle Diameter
105906	[0.44] 11,2	[0.17] 4,3	[0.33] 8,3	M4 or #8
102911	[0.56] 14,2	[0.20] 5,1	[0.38] 9,6	M5 or #10
215905	[0.69] 17,5	[0.26] 6,7	[0.50] 12,7	M6 or 1/4
507907	[0.88] 22,4	[0.33] 8,4	[0.60] 15,2	M8 or 5/16
235906	[1.00] 25,4	[0.41] 10,5	[0.75] 19,1	M10 or 3/8
247909	[1.26] 32	[0.53] 13,5	[0.91] 23,2	M12 or 1/2
267902	[1.44] 36,6	[0.66] 16,8	[1.03] 26,2	M16 or 3/8

ADAPTERS & EXTENSIONS

Manual Clamping Accessories | Product Overview

Features:
- Provides flexible adjustment of length and height
- Mounts to manual clamp models that feature open clamping arms
- Lightweight aluminum

Application Areas:
- Checking fixtures
- Areas requiring multiple clamping points

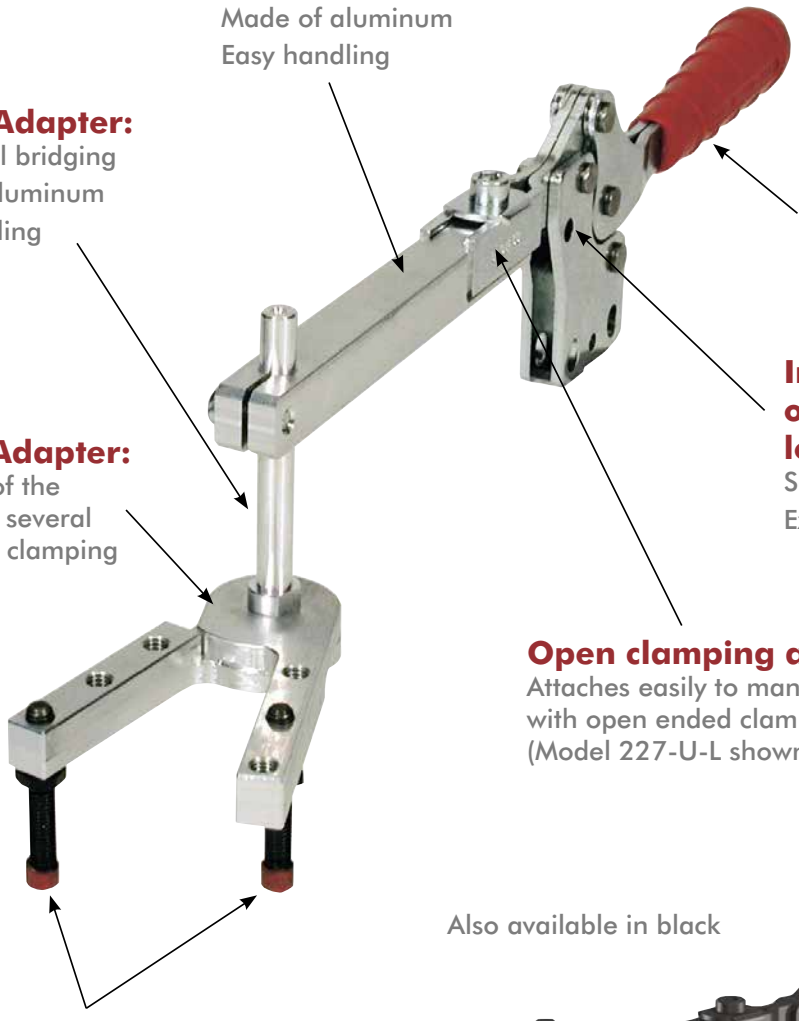

Length Adapter:
For horizontal bridging
Made of aluminum
Easy handling

Height Adapter:
For vertical bridging
Made of aluminum
Easy handling

Plastic Grip:
Ergonomic design
for checking fixtures

Internal over-centre locking:
Secure fixing
Exact positioning

Clamping Arm Adapter:
Flexible adjustment of the clamping points with several holes for asymmetric clamping

Open clamping arm:
Attaches easily to manual clamps with open ended clamping arms (Model 227-U-L shown)

Adjustment Spindles:
For Checking Fixtures
Small head-diameter
No interference during the checking process

Also available in black

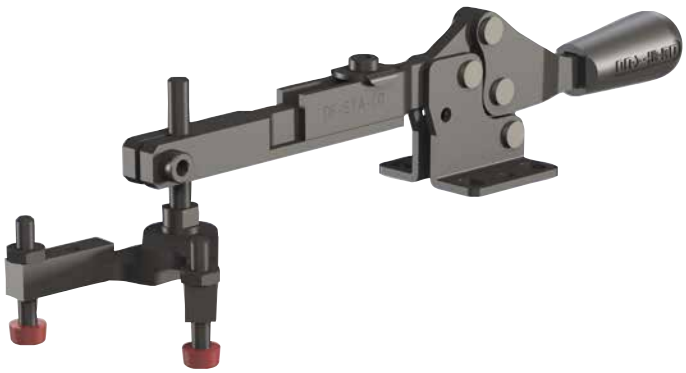

Dimensions and technical information are subject to change without notice

Length Adapter

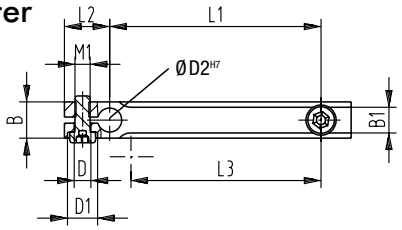

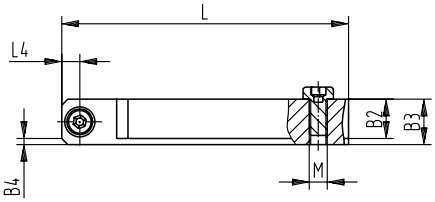



Model no.	Length adapter	B	B1 +0, -,1	B2	B3	B4	DØ	D1 Ø	D2H7	L	L1 ±0,2	L2	L3	L4	M	M1
213-U-L / 213-UB-L 2013-U / 2013-UB 2013-UR / 2013-UBR	L-213-1-01ⓘ L-213-1-02ⓘ	[0.39] 10	[0.22] 5,5	[0.31] 8	[0.39] 10	2x 45°	[0.22] 5,5	--	[0.24] 6	[1.97] 50 [3.54] 90	[1.18] 30 [2.76] 70	[0.47] 12	[0.79] 20	[0.20] 5	M4	M5
202-U-L / 202-UB-L 217-U-L / 217-UB-L 2002-U-L / 2002-UB-L 2017-U / 2017-UB 2017-UR / 2017-UBR	L-217-1-01ⓘ L-217-1-02ⓘ L-217-1-03ⓘ	[0.47] 12	[0.26] 6,5	[0.35] 9	[0.47] 12	2x 45°	[0.22] 5,5	[0.39] 10		[2.17] 55 [3.74] 95 [5.31] 135	[1.18] 30 [2.76] 70 [4.33] 110	[0.59] 15	[1.30] 33 [1.89] 48	[0.24] 6	M5	M5
207-U-L / 207-UB-L 227-U-L / 227-UB-L 2007-U-LS / 2007-U-LS 2027-U / 2027-UB 2027-UR / 2027-UBR	L-227-1-01ⓘ L-227-1-02ⓘ L-227-1-03ⓘ L-227-1-04ⓘ		[0.33] 8,5	[0.51] 13	[0.59] 15	2x 45°	[0.22] 5,5		[0.31] 8	[2.17] 55 [3.74] 95 [5.31] 135 [6.89] 175	[1.18] 30 [2.76] 70 [4.33] 110 [5.91] 150		[1.30] 33 [2.87] 73		M6	M5

ⓘ Available upon request. Also available in Black. Add **-BLK** to part number.

Height Adapter

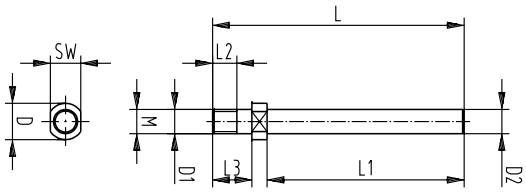



Model no.	Height adapter	DØ	D1 Ø f7	D2 f7	L	L1	L2	L3	SW	M
213-U-L / 213-UB-L 2013-U / 2013-UB 2013-UR / 2013-UBR	L-213-2-01ⓘ L-213-2-02ⓘ	[0.39] 10	[0.20] 5	[0.24] 6	[2.05] 52 [3.23] 82	[1.38] 35 [2.56] 65	[0.31] 8	[0.47] 12	[0.31] 8	M5
202-U-L / 202-UB-L 217-U-L / 217-UB-L 2002-U-LS / 2002-UB-LS 2017-U / 2017-UB 2017-UR / 2017-UBR	L-217-2-01ⓘ L-217-2-02ⓘ		[0.24] 6	[0.24] 6	[2.05] 52 [3.23] 82	[1.38] 35 [2.56] 65				M6
207-U-L / 207-UB-L 227-U-L / 227-UB-L 2007-U-LS / 2007-U-LS 2027-U / 2027-UB 2027-UR / 2027-UBR	L-227-2-01ⓘ L-227-2-02ⓘ	[0.31] 8	[0.31] 8	[0.31] 88	[2.09] 53 [3.23] 82	[1.38] 35 [2.56] 65		[0.51] 13	[0.39] 10	M8

ⓘ Available upon request. Also available in Black. Add **-BLK** to part number.

ADAPTERS & EXTENSIONS

Manual Clamping Accessories | Dimensions

Clamping Arm Adapter

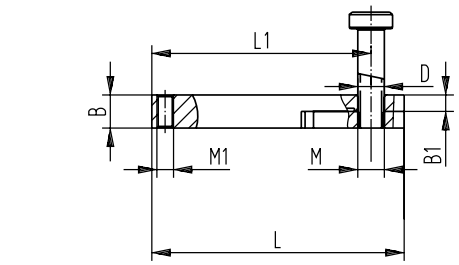

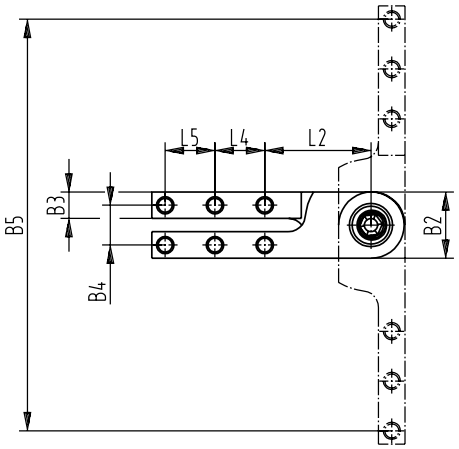



Model no.	Clamping arm adapter	B	B1	B2	B3	B4	B5	DØ H7	L	L1	L2	L4	L5	L6	M	M1
213-U-L / 213-UB-L **2013-U / 2013-UB** **2013-UR / 2013-UBR**	**L-213-3-01** ⓘ	[0.39] 10	[0.20] 5	[0.79] 20	[0.31] 8	[0.47] 12	[3.70] 94	[0.20] 5	[2.40] 61	[2.01] 51	[1.26] 32	[0.59] 15	-	[0.39] 10	M5	M5
202-U-L / 202-UB-L **217-U-L / 217-UB-L** **2002-U-LS / 2002-UB-LS** **2017-U / 2017-UB** **2017-UR / 2017-UBR**	**L-217-3-01** ⓘ							[0.24] 6					-		M6	M5
207-U-L / 207-UB-L **227-U-L / 227-UB-L** **2007-U-LS / 2007-UB-LS** **2027-U / 2027-UB** **2027-UR / 2027-UBR**	**L-227-3-01** ⓘ						4.88] 124	[0.31] 8	[2.99] 76	[2.60] 66			[0.59] 15		M8	M5

ⓘ Available upon request. Also available in Black. Add **-BLK** to part number.

Dimensions and technical information are subject to change without notice

Arm Extension:

- Easily cut to length
- Drilled & tapped for spindle attachment

Note: adding arm extension will reduce the clamp's holding capacity. Refer to Technical Appendix for details

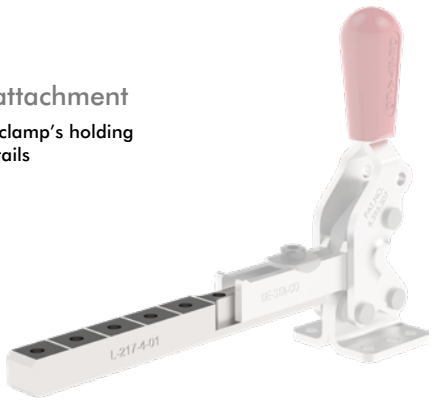

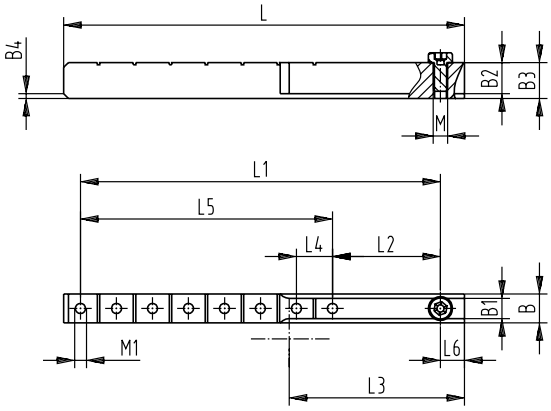

Model no.	Extension link	B	B1 +0, -,1	B2	B3	B4	L ±0,2	L1	L2	L3	L4	L5	L6	M	M1
213-U-L / 213-UB-L **2013-U / 2013-UB** **2013-UR / 2013-UBR**	**L-213-4-01** ⓘ	[0.39] 10	[0.22] 5,5	[0.31] 8	[0.39] 10	2x 45°	[3.35] 85	[2.76] 70	[0.87] 22	[0.79] 20	[0.47] 12	[1.89] 48	[0.31] 8	M4	M5
202-U-L / 202-UB-L **217-U-L / 217-UB-L** **2002-U-LS / 2002-UB-LS** **2017-U / 2017-UB** **2017-UR / 2017-UBR**	**L-217-4-01** ⓘ	[0.47] 12	[0.26] 6,5	[0.35] 9	[0.47] 12	2x 45°	[5.00] 127	[4.33] 110	[1.38] 35	[1.89] 48	[0.59] 15	[2.95] 75	[0.39] 10	M5	M5
207-U-L / 207-UB-L **227-U-L / 227-UB-L** **2007-U-LS / 2007-UB-LS** **2027-U / 2027-UB** **2027-UR / 2027-UBR**	**L-227-4-01** ⓘ		[0.33] 8,5	[0.51] 13	[0.59] 15	2x 45°	[6.57] 167	[5.91] 150	[1.77] 45	[2.87] 73		[4.13] 105	[0.39] 10	M6	M5

ⓘ Available upon request. Also available in Black. Add **-BLK** to part number.

Cross Arm Set

- 1 x cross arm
- 2 x adjustment spindles with neoprene thrust pads vulcanized, resin-free, inc. 2 x fastening nuts
- 4 x flange washers
- 1 x screw incl. 1 x fastening nut, self-locking



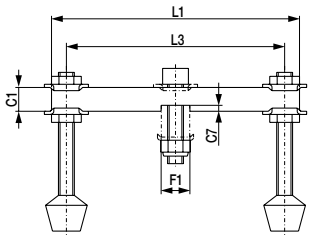

Model no.	For Models with U Arms	C1	C7	F	F1	L1	L3	Adjustable Spindles
207426-Q	**207, 225, 227**	[0.47] 12	[0.12] 3	[0.31] 35	[0.57] 14,5	[4.92] 125	[4.33] 110	507208-M
210440-Q	**210, 235, 237**	[0.63] 16	[0.16] 4	[0.43] 11	[0.75] 19	[5.87] 149	[5.12] 130	240208-M

812 SERIES

Pneumatic Toggle Clamps | Product Overview

Features:
- Smallest of the pneumatic hold down series
- Pneumatic version of Model 201-U

Applications:
- Assembly
- Welding

Also Available:
See page MC-ACC-1 for spindle accessories

See page MC-PSC-38 for sensing options

High temperature version available upon request as Model 812-**U**-**HT**

812-**U**



Technical Information | Holding Capacities

	Maximum Holding Capacity		Maximum Exerting Force @ 5 bar [72 PSI]						Accessories (Supplied)	
Model	Inner	Outer	Inner	Outer	Weight	Bore Size	Air Consumption† dm^3 [ft^3]	Port Size	Spindle Accessory	Flanged Washers
812-U	[100 lbf] 440 N	[55 lbf] 245 N	[136 lbf] 613 N	[92 lbf] 413 N	[0.46 lbs] 0,21 kg	[0.75] 19,1	[0.003] 0,09	M5	305208-M	102111

†Per double stroke at 5 bar [72 PSI]

Max. Operating Temp: -23°C to 74°C [-10°F to 165°F]
Optional Sensors: 810156, 810158
Replacement Clamp Assembly: 812-U-LC
Replacement Cylinder Assembly: 812CYL

In no case should the inlet pressure be high enough to create an exerting force that exceeds the clamp's holding capacity. See Technical Appendix Section for details.

Dimensions and technical information are subject to change without notice

812-U



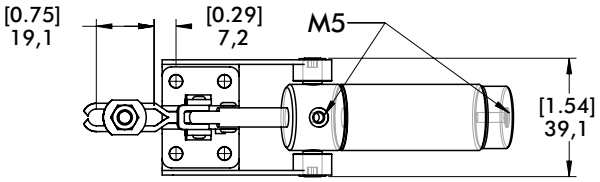

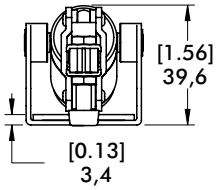

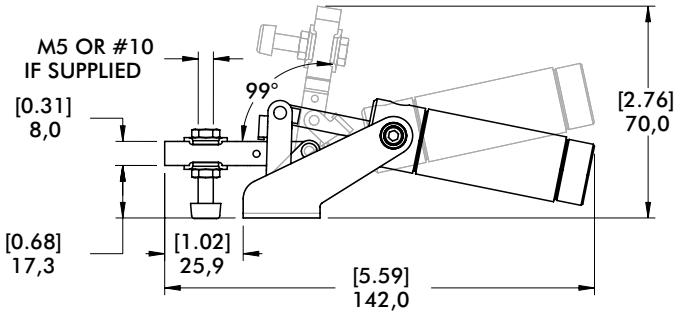

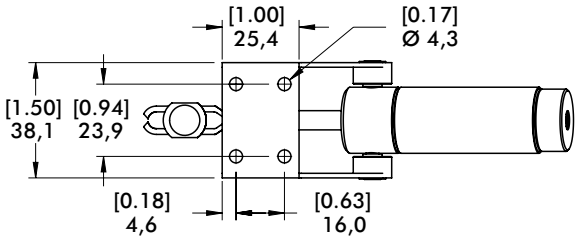

mm [INCH]

THIRD ANGLE PROJECTION

Note:
Model 812-U requires either 810156 or 810158 sensors. Two (2) sensors are required if detecting both open and closed positions. These sensors use 810156-1 (included with sensors) band clamp to mount the sensor to the cylinder wall.



802 SERIES

Pneumatic Toggle Clamps | Product Overview

Features:
- Pneumatic version of Model 202-U
- Sensor ready for T-slot or round sensors

Applications:
- Assembly
- Welding

Also Available:
See page MC-ACC-1 for spindle accessories

See page MC-PSC-38 for sensing options

802-**U**
802-**UE**

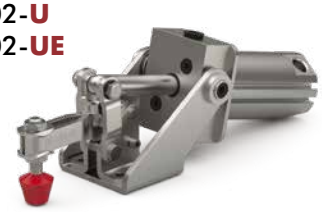

Technical Information | Holding Capacities

Model	Maximum Holding Capacity		Max. Exerting Force @ 5 bar [72 PSI]		Weight	Bore Size	Air Consumption† dm^3 [ft^3]	Port Size	Accessories (Supplied)	
	Inner	Outer	Inner	Outer					Spindle Accessory	Flanged Washers
802-U	[200 lbf] 890 N	[110 lbf] 490 N	[200 lbf] 890 N	[110 lbf] 490 N	[1.52 lbs] 0,69 kg	[0.79] 20	[0.0006] 0,02	1/8 NPT	202208-M	215105
802-UE								G-1/8		

†Per double stroke at 5 bar [72 PSI]

Max Cylinder Pressure: 10bar [145psig]*
Max Operating Temp: -10°C to 90°C [-14°F to 194°F]
Replacement Seal Kit: 802550-20-1-00
Replacement Clamp Assembly: 802-U-LC
Replacement Cylinder Assembly: 802CYL

*In no case should the inlet pressure be high enough to create an exerting force that exceeds the clamp's holding capacity. See Technical Appendix for details.

Sensor Accessories	Item Number
Round Reed Switch with Quick Disconnect	810169
T-slot Reed Switch with Quick Disconnect	8EA-109-1
Quick Disconnect 2M Extension Cable	CABL-010
Quick Disconnect 5M Extension Cable	CABL-013

See Pneumatic Accessories section for more options

Dimensions and technical information are subject to change without notice

802-**U**
802-**UE**



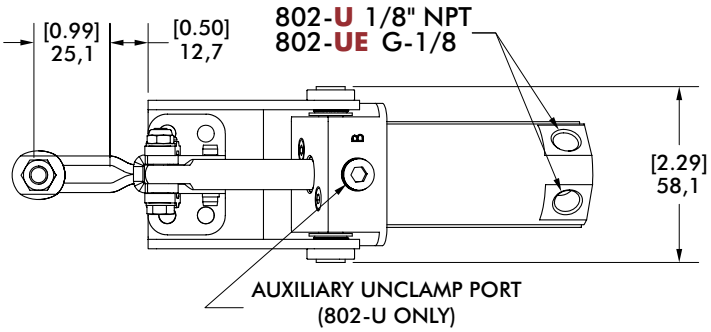

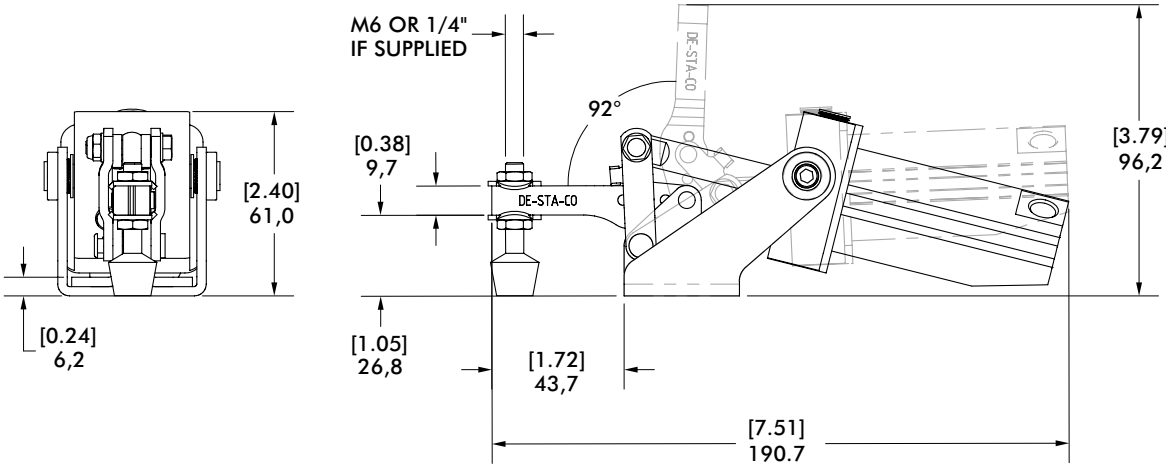

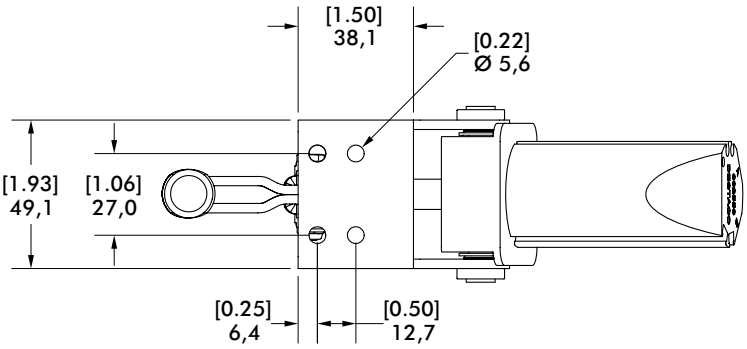

mm [INCH]

THIRD ANGLE PROJECTION

807 SERIES

Pneumatic Toggle Clamps | Product Overview

Features:
- Pneumatic version of Series 207 manual clamps
- Sensor ready for round or T-slot sensors.
- Built-in flow restriction eliminates need for external flow controls

Applications:
- Assembly
- Welding

Also Available:
See page MC-ACC-1 for spindle accessories

See page MC-PSC-38 for sensing options

High temperature version available upon request, add **–HT** to model number. Example: 807-U**–HT**

807-**U**
807-**UE**



807-**S**
807-**SE**



Technical Information | Holding Capacities

	Maximum Holding Capacity		Maximum Exerting Force @ 5 bar [72 PSI]						Accessories (Supplied)		
Model	Inner	Outer	Inner	Outer	Weight	Bore Size	Air Consumption† dm^3 [ft^3]	Port Size	Spindle Accessory	Flanged Washers	Bolt Retainer
807-U	[375 lbf] 1670 N	[275 lbf] 1220 N	[576 lbf] 2573 N	[297 lbf] 1327 N	[1.66 lbs] 0,75 kg	[1.26] 32	[0.015] 0,42	1/8 NPT	--	507107	--
807-UE								G-1/8	2007208-M		
807-S	[500 lbf] 2220 N	[260 lbf] 1160 N	[540 lbf] 2412 N	[180 lbf] 804 N				1/8 NPT	--	--	207105
807-SE								G-1/8			

†Per double stroke at 5 bar [72 PSI]

Max Cylinder Pressure: 10bar [145psig]*
Max Operating Temp: -10°C to 90°C [-14°F to 194°F]
Replacement Seal Kit: 802450-32-1-00
Replacement Clamp Assembly: 807-U-LC, 807-S-LC
Replacement Cylinder Assembly: 807CYL

*In no case should the inlet pressure be high enough to create an exerting force that exceeds the clamp's holding capacity. See Technical Appendix for details.

Sensor Accessories	**Item Number**
Round Reed Switch with Quick Disconnect	810169
T-slot Reed Switch with Quick Disconnect	8EA-109-1
Quick Disconnect 2M Extension Cable	CABL-010
Quick Disconnect 5M Extension Cable	CABL-013

See Pneumatic Accessories section for more options

Dimensions and technical information are subject to change without notice

807-**U**
807-**UE**



807-**U** / 807-**S** 1/8" NPT
807-**UE** / 807-**SE** G-1/8

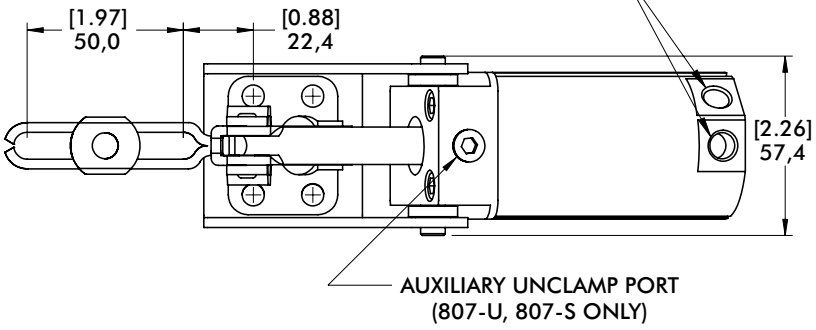

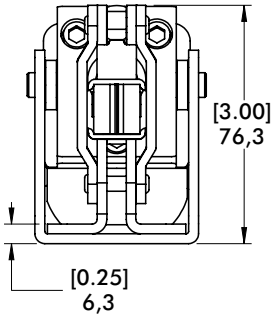

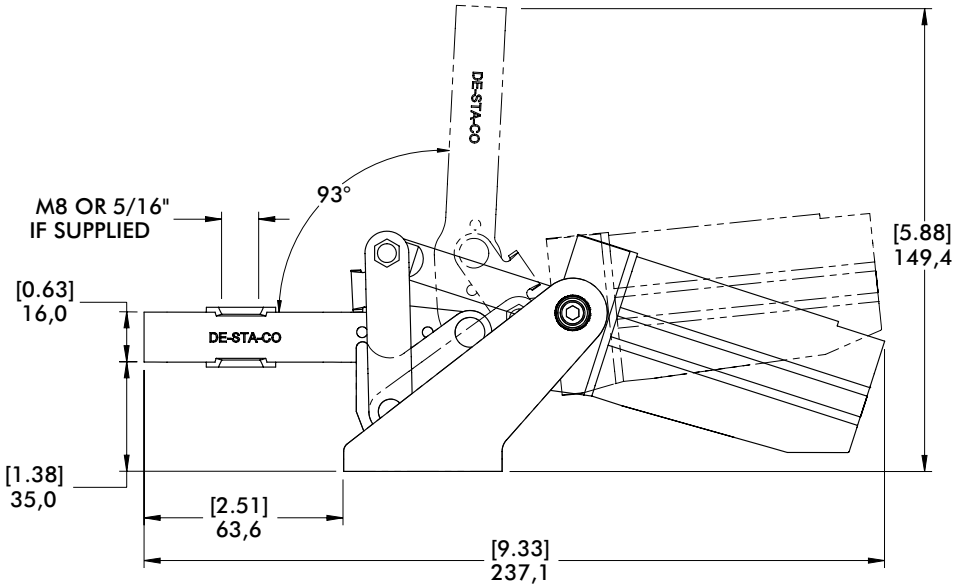

807-**S**
807-**SE**

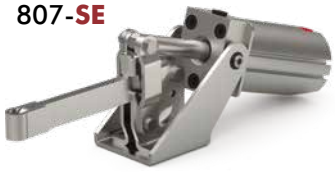

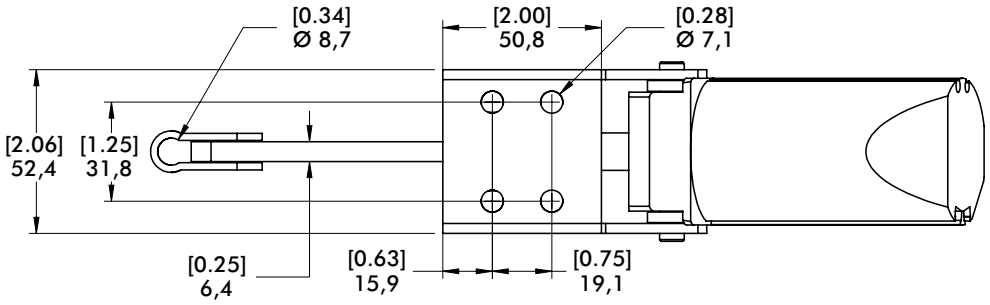

mm [INCH]

THIRD ANGLE
PROJECTION

810 SERIES

Pneumatic Toggle Clamps | Product Overview

Features:
- Pneumatic version of Series 210 manual clamps
- Sensor ready for round or T-slot style sensors
- Built-in flow restriction eliminates need for external flow controls

Applications:
- Assembly
- Welding

Also Available:
See page MC-ACC-1 for spindle accessories

See page MC-PSC-38 for sensing options

810-**U**
810-**UE**



810-**S**
810-**SE**



Technical Information | Holding Capacities

Model	Maximum Holding Capacity		Maximum Exerting Force @ 5 bar [72 PSI]		Weight	Bore Size	Air Consumption† dm³ [ft³]	Port Size	Accessories (Supplied)		
	Inner	Outer	Inner	Outer					Spindle Accessory	Flanged Washers	Bolt Retainer
810-U	[600 lbf] 2670 N	[290 lbf] 1290 N	[856 lbf] 3834 N	[407 lbf] 1823 N	[4.07 lbs] 1,85 kg	[1.57] 40	[0.029] 0,83	1/8 NPT	--	235106	--
810-UE								G-1/8	240208-M		
810-S	[750 lbf] 3340 N	[500 lbf] 2220 N	[702 lbf] 3143 N					1/8 NPT	--	--	210114
810-SE								G-1/8			

†Per double stroke at 5 bar [72 PSI]

Max Cylinder Pressure: 10bar [145psig]*
Max Operating Temp: -10°C to 90°C [-14°F to 194°F]
Replacement Seal Kit: 810450-40-1-00
Replacement Clamp Assembly: 810-U-LC, 810-S-LC
Replacement Cylinder Assembly: 810CYL

*In no case should the inlet pressure be high enough to create an exerting force that exceeds the clamp's holding capacity.

Sensor Accessories	**Item Number**
Round Reed Switch with Quick Disconnect	810169
T-slot Reed Switch with Quick Disconnect	8EA-109-1
Quick Disconnect 2M Extension Cable	CABL-010
Quick Disconnect 5M Extension Cable	CABL-013

See Pneumatic Accessories section for more options

Dimensions and technical information are subject to change without notice

810-U
810-UE



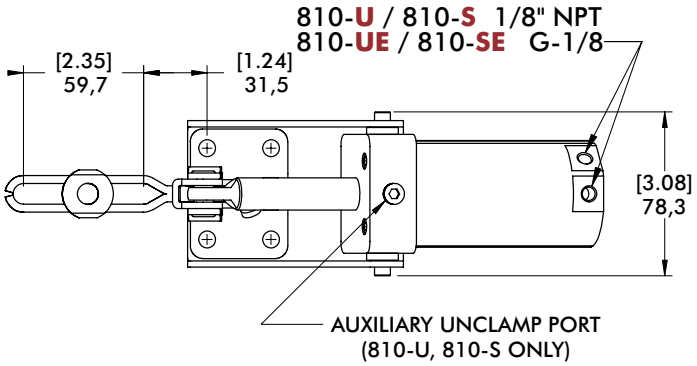

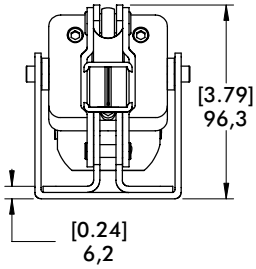

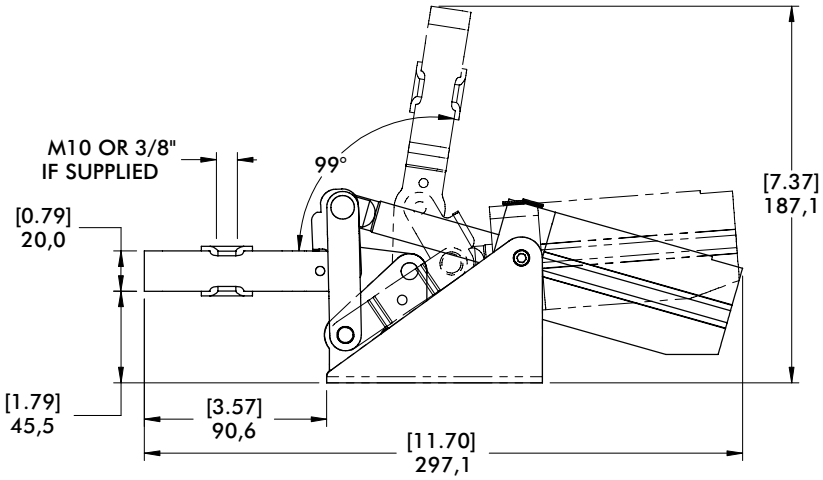

810-S
810-SE



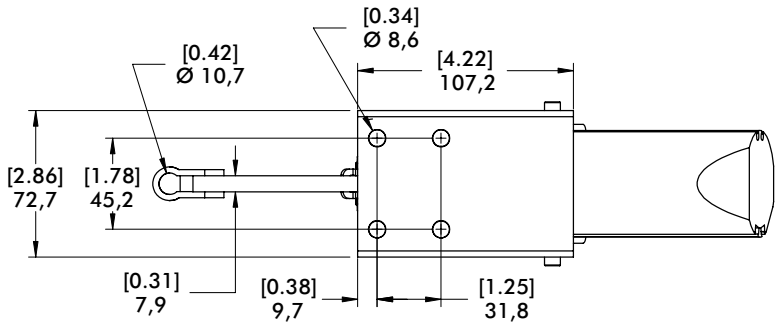

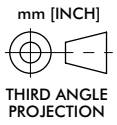

846 SERIES

Pneumatic Toggle Clamps | Product Overview

Features:
- Similar in size to 807 but with higher holding capacity
- Large, solid clamping arm is easily modified to suit application requirements
- Sensor ready for round or T-slot style sensors

Applications:
- Assembly
- Welding

Also Available:
See page MC-PSC-38 for sensing options

846ⓘ



Technical Information | Holding Capacities

Model	Maximum Holding Capacity Inner	Maximum Holding Capacity Outer	Max. Exerting Force @ 5 bar [72 PSI] Inner	Max. Exerting Force @ 5 bar [72 PSI] Outer	Weight	Bore Size	Air Consumption† dm^3 [ft^3]	Port Size
846ⓘ	[750 lbf] 3340 N	[520 lbf] 2310 N	[786 lbf] 3520 N	[491 lbf] 2200 N	[4.18 lbs] 1,90 kg	[1.57] 40	[0.029] 0,83	1/8 NPT

ⓘ This item is available upon request. †Per double stroke at 5 bar [72 PSI]

Max Cylinder Pressure: 10bar [145psig]*
Max Operating Temp: -10°C to 90°C [-14°F to 194°F]
Replacement Seal Kit: 810450-40-1-00
Replacement Clamp Assembly: 846-LC
Replacement Cylinder Assembly: 846CYL

*In no case should the inlet pressure be high enough to create an exerting force that exceeds the clamp's holding capacity. See Technical Appendix Section for details.

Sensor Accessories	Item Number
Round Reed Switch with Quick Disconnect	810169
T-slot Reed Switch with Quick Disconnect	8EA-109-1
Quick Disconnect 2M Extension Cable	CABL-010
Quick Disconnect 5M Extension Cable	CABL-013

See Pneumatic Accessories section for more options


846

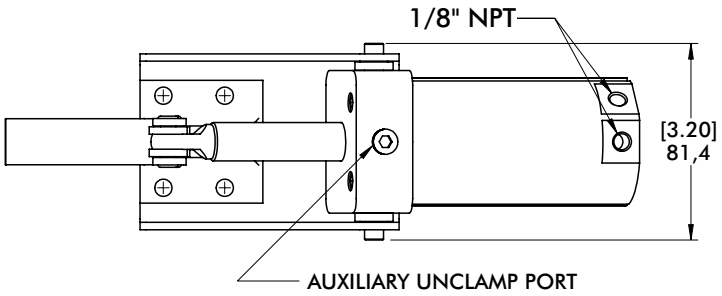
1/8" NPT
[3.20]
81,4
AUXILIARY UNCLAMP PORT

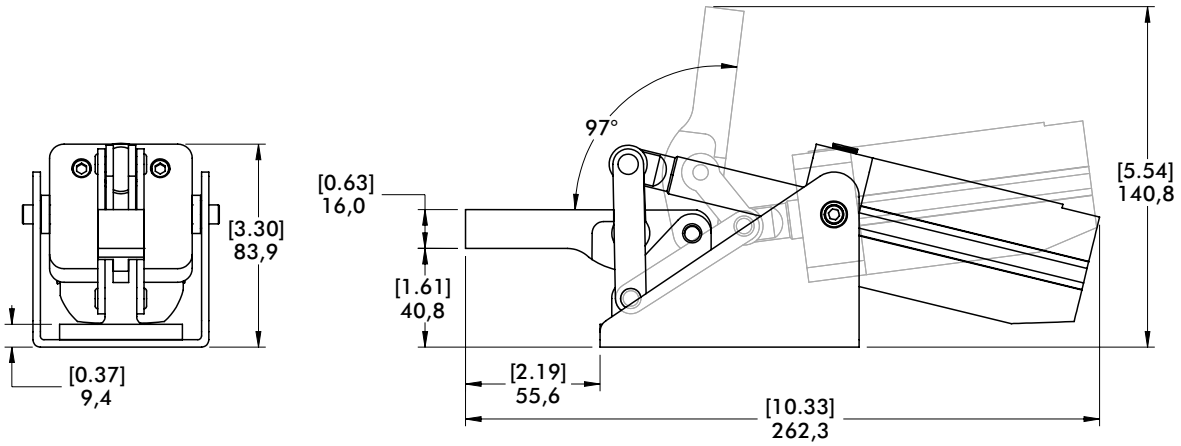
97°
[0.63]
16,0
[1.61]
40,8
[5.54]
140,8
[3.30]
83,9
[0.37]
9,4
[2.19]
55,6
[10.33]
262,3

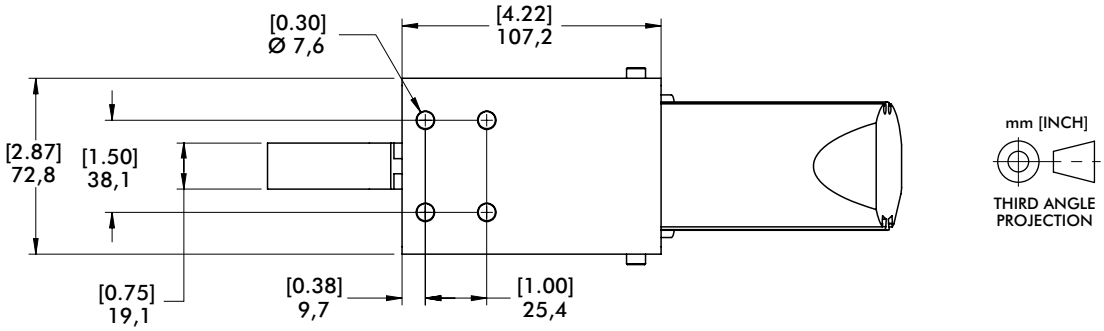
[0.30]
Ø 7,6
[4.22]
107,2
[2.87]
72,8
[1.50]
38,1
[0.75]
19,1
[0.38]
9,7
[1.00]
25,4
mm [INCH]
THIRD ANGLE
PROJECTION

847 SERIES

Pneumatic Toggle Clamps | Product Overview

Features:
- Pneumatic version of Series 247 manual clamps
- Switch ready for Ø4mm or 6,5mmX5mm sensors
- Built-in flow restriction eliminates need for external flow controls

Applications:
- Assembly
- Welding

Also Available:
See page MC-ACC-1 for spindle accessories

See page MC-PSC-38 for sensing options

847-**U**



847-**S**



Technical Information | Holding Capacities

Model	Maximum Holding Capacity		Max. Exerting Force @ 5 bar [72 PSI]		Weight	Bore Size	Air Consumption† dm³ [ft³]	Port Size	Accessories (Supplied)		
	Inner	Outer	Inner	Outer					Spindle Accessory	Flanged Washers	Bolt Retainer
847-U	[1000 lbf] 4450 N	[480 lbf] 2135 N	[948 lbf] 4248 N	[450 lbf] 2018 N	[8.93 lbs] 4,05 kg	[1.97] 50	[0.044] 1,25	1/4 NPT	--	247109	--
847-S	[1000 lbf] 4450 N	[650 lbf] 2890 N		[426 lbf] 1912 N				1/4 NPT	--	--	247110

†Per double stroke at 5 bar [72 PSI]

Max Cylinder Pressure: 10bar [145psig]*
Max Operating Temp: -10°C to 90°C [-14°F to 194°F]
Replacement Seal Kit: 847450-50-1-00
Replacement Clamp Assembly: 847-U-LC, 847-S-LC
Replacement Cylinder Assembly: 847CYL

*In no case should the inlet pressure be high enough to create an exerting force that exceeds the clamp's holding capacity. See Technical Appendix Section for details.

Sensor Accessories	**Item Number**
Round Reed Switch with Quick Disconnect	810169
T-slot Reed Switch with Quick Disconnect	8EA-109-1
Quick Disconnect 2M Extension Cable	CABL-010
Quick Disconnect 5M Extension Cable	CABL-013

See Pneumatic Accessories section for more options

Dimensions and technical information are subject to change without notice

847-U



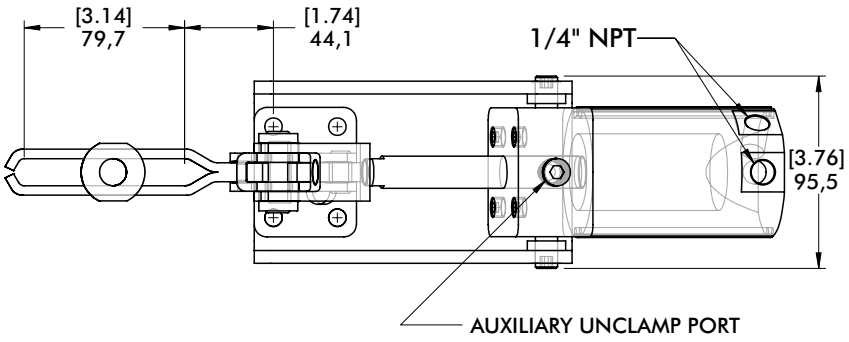

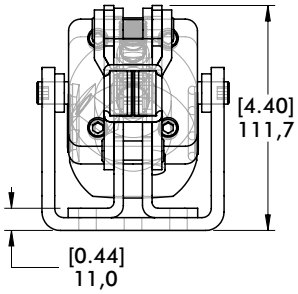

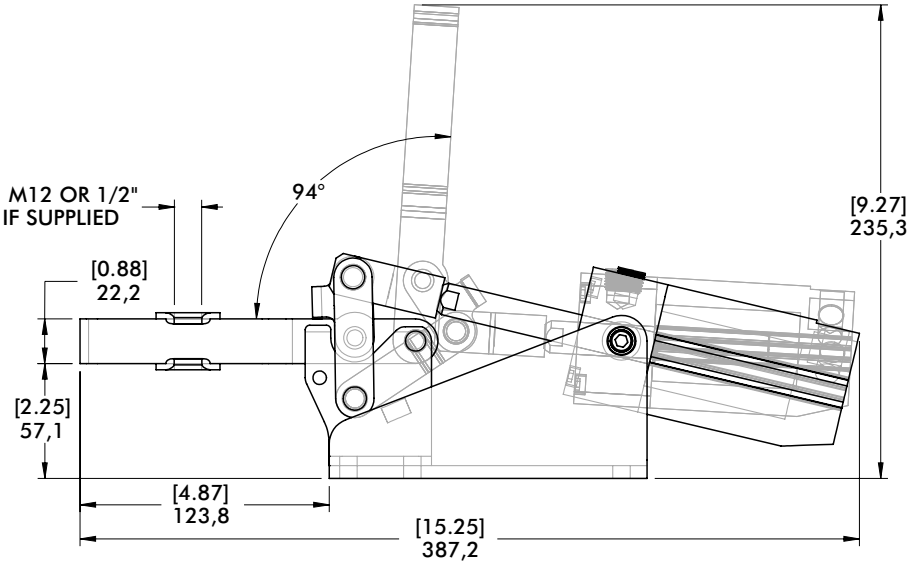

847-S



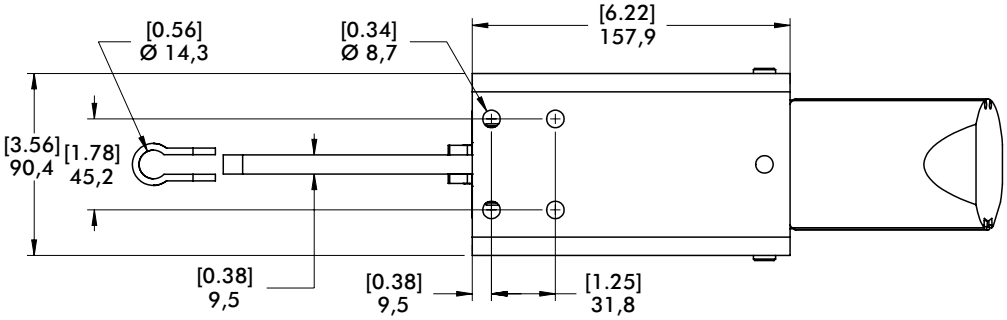

mm [INCH]

THIRD ANGLE PROJECTION

8007 SERIES

Pneumatic Toggle Clamps | Product Overview

Features:
- Hardened pins and bushing at all pivot points for long life cycle
- Solid clamping bar may be modified to suit application requirements
- Sensor ready for round or T-slot style sensors

Applications:
- Assembly
- Welding

Also Available:
See page MC-PSC-38 for sensing options

8007-**E**



8007-**EHL**



8007-**EHR**



Technical Information | Holding Capacities

Model	Maximum Holding Capacity		Max. Exerting Force @ 5 bar [72 PSI]		Weight	Bore Size	Air Consumption† dm³ [ft³]	Port Size
	Inner	Outer	Inner	Outer				
8007-E	[830 lbf] 3700 N	[405 lbf] 1800 N	[606 lbf] 2700 N	[225 lbf] 1000 N	1,6 kg [3.53 lbs]	[1.26] 32	[0.016] 0,44	G-1/8
8007-EHL					1,7 kg [3.75 lbs]			
8007-EHR								

†Per double stroke at 5 bar [72 PSI]

Max Cylinder Pressure: 10bar [145psig]*
Max Operating Temp: -10°C to 90°C [-14°F to 194°F]
Replacement Clamp Assembly: 8007-LC

*In no case should the inlet pressure be high enough to create an exerting force that exceeds the clamp's holding capacity. See Technical Appendix Section for details.

Sensor Accessories	Item Number
Round Reed Switch with Quick Disconnect	810169
T-slot Reed Switch with Quick Disconnect	8EA-109-1
Quick Disconnect 2M Extension Cable	CABL-010
Quick Disconnect 5M Extension Cable	CABL-013

See Pneumatic Accessories section for more options

Dimensions and technical information are subject to change without notice

8007-**EHR**



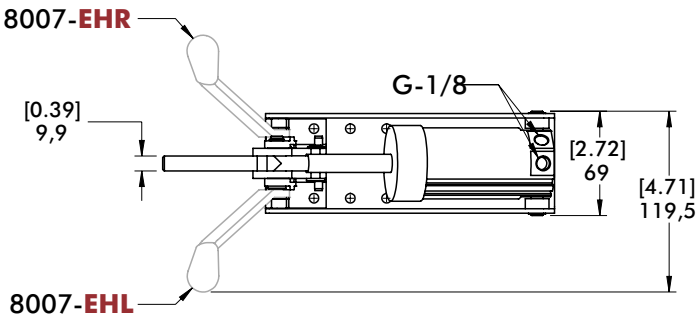

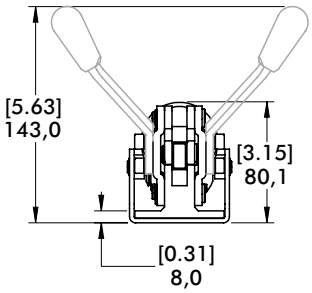

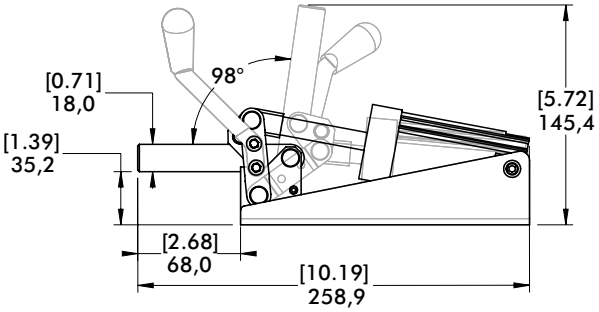

8007-**E**



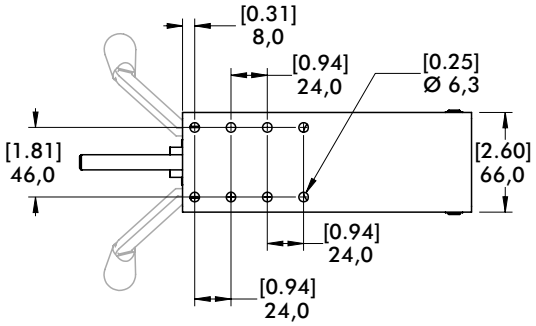

mm [INCH]

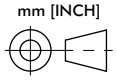

THIRD ANGLE PROJECTION

858 SERIES

Pneumatic Toggle Clamps | Product Overview

Features:
- Hardened pins and bushing at all pivot points for long lifecyle
- Large, solid clamping arm is easily modified to suit application requirements
- Sensor ready for round or T-slot style sensors

Applications:
- Assembly
- Welding

Also Available:
See page MC-PSC-38 for sensing options

858
858-**E**



Technical Information | Holding Capacities

Model	Maximum Holding Capacity		Max. Exerting Force @ 5 bar [72 PSI]		Weight	Bore Size	Air Consumption† dm^3 [ft^3]	Port Size
	Inner	Outer	Inner	Outer				
858	[4,000 lbf] 17800 N	[2,000 lbf] 8900 N	[1,530 lbf] 6857 N	[800 lbf] 3585 N	[16.11 lbs] 7.31 kg	[2.48] 63	[0.109] 3,08	1/4 NPT
858-E								G-1/4

†Per double stroke at 5 bar [72 PSI]

Max Cylinder Pressure: 10bar [145psig]*
Max Operating Temp: -10°C to 90°C [-14°F to 194°F]
Replacement Seal Kit: 850450-63-1-00
Replacement Clamp Assembly: 858-LC
Replacement Cylinder Assembly: 858CYL

*In no case should the inlet pressure be high enough to create an exerting force that exceeds the clamp's holding capacity. See Technical Appendix Section for details.

Sensor Accessories	**Item Number**
Round Reed Switch with Quick Disconnect	810169
T-slot Reed Switch with Quick Disconnect	8EA-109-1
Quick Disconnect 2M Extension Cable	CABL-010
Quick Disconnect 5M Extension Cable	CABL-013

See Pneumatic Accessories section for more options

Dimensions and technical information are subject to change without notice

858
858-E



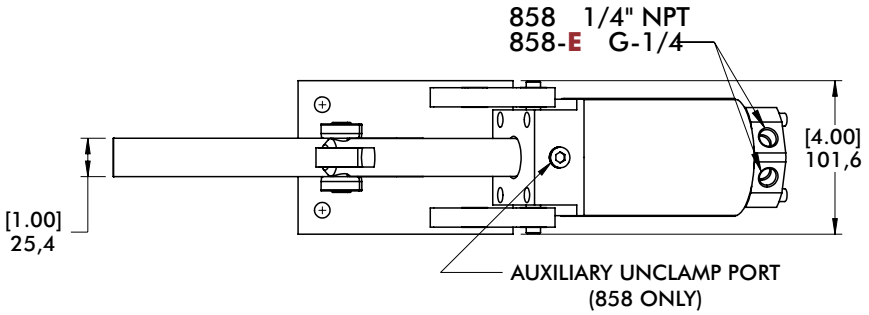

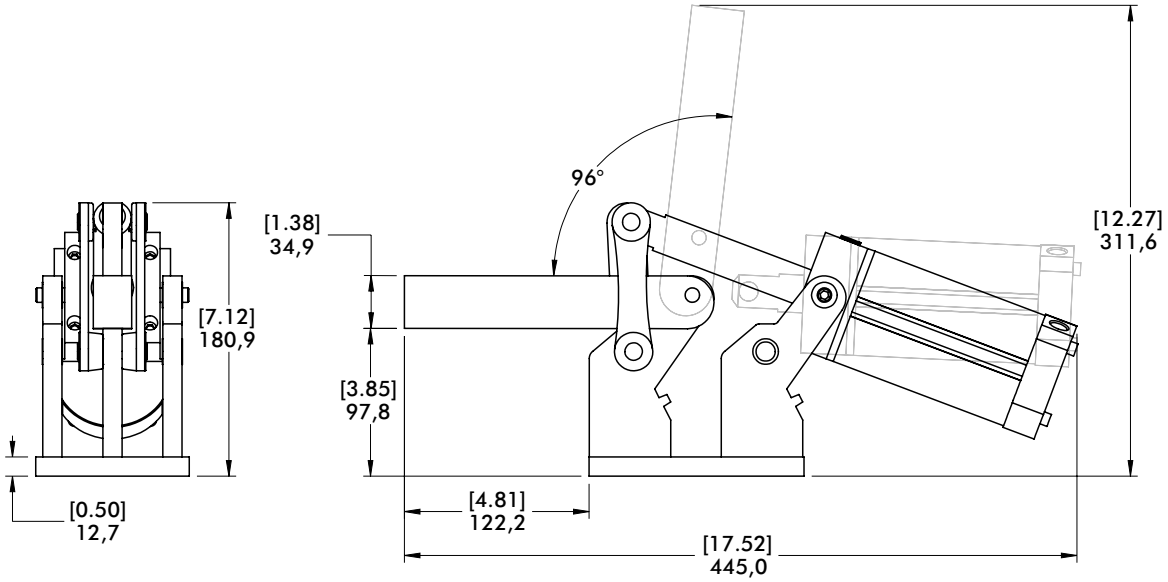

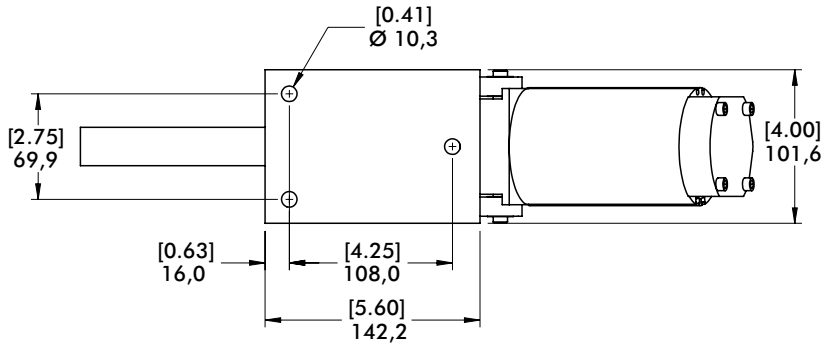

mm [INCH]
THIRD ANGLE PROJECTION

8021, 8071 SERIES

Pneumatic Toggle Clamps | Product Overview

Features:
- Enclosed clamp for dirty environments such as spot and MIG welding
- Non-pivoting cylinder can be hard-piped into fixtures
- Sensor ready for round or T-slot style sensors

Applications:
- Assembly
- Welding

Also Available:
See page MC-ACC-1 for spindle accessories

See page MC-PSC-38 for sensing options

8021 ⓘ
8021-**UE** ⓘ



8071
8071-**UE**



Technical Information | Holding Capacities

Model	Maximum Holding Capacity		Max. Exerting Force @ 5 bar [72 PSI]		Weight	Bore Size	Air Consumption† dm^3 [ft^3]	Port Size	Accessories (Supplied)	
	Inner	Outer	Inner	Outer					Spindle Accessory	Flanged Washer
8021 ⓘ **8021-UE** ⓘ	[390 lbf] 1735 N	[255 lbf] 1135 N	[169 lbf] 760 N	[100 lbf] 449 N	[2.30 lbs] 1,04 kg	[1.26] 32	[0.015] 0,42	1/8 NPT G-1/8	--	8021122
8071 **8071-UE**	[450 lbf] 2000 N	[310 lbf] 1380 N	[496 lbf] 2218 N	[283 lbf] 1267 N	[2.80 lbs] 1,27 kg	[1.57] 40	[0.020] 0,58	1/8 NPT G-1/8	--	507107

ⓘ This item is available upon request. †Per double stroke at 5 bar [72 PSI]

Max Cylinder Pressure: 10bar [145psig]*
Max Operating Temp: -10°C to 90°C [-14°F to 194°F]
Replacement Seal Kit: 8021: 802450-32-1-00
8071: 810450-40-1-00

*In no case should the inlet pressure be high enough to create an exerting force that exceeds the clamp's holding capacity. See Technical Appendix Section for details.

Sensor Accessories	**Item Number**
Round Reed Switch with Quick Disconnect	810169
T-slot Reed Switch with Quick Disconnect	8EA-109-1
Quick Disconnect 2M Extension Cable	CABL-010
Quick Disconnect 5M Extension Cable	CABL-013

See Pneumatic Accessories section for more options

8021
8021-**UE**



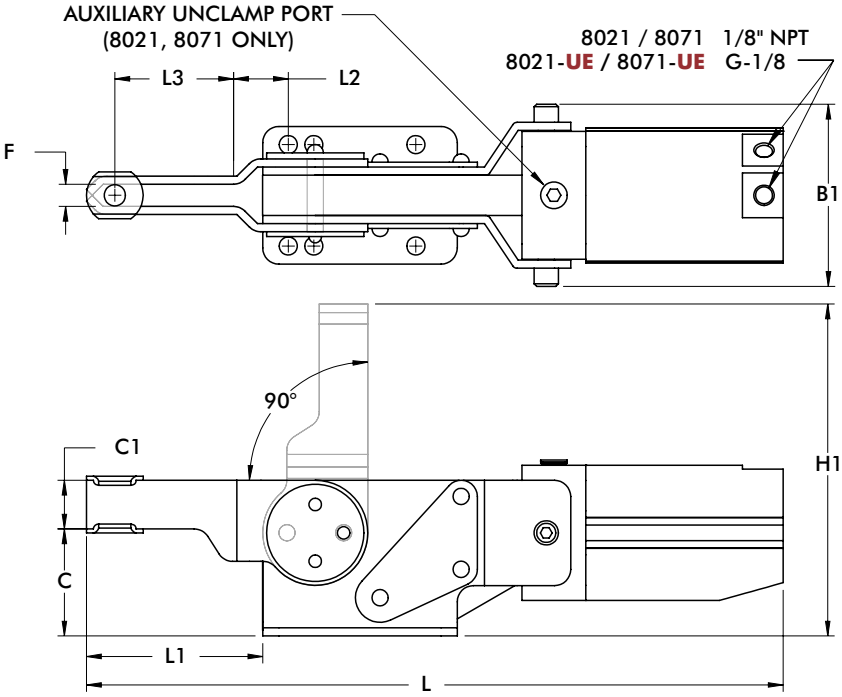

8071
8071-**UE**



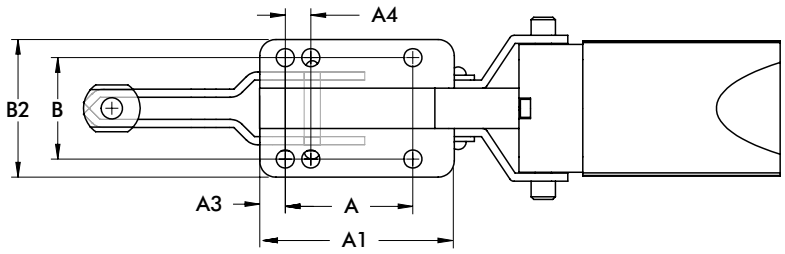

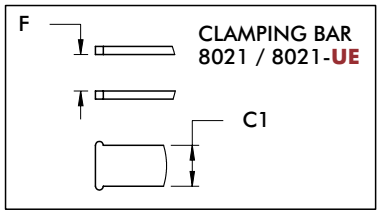

mm [INCH]
THIRD ANGLE PROJECTION

Model	A	A1	A3	A4	B	B1	B2	C	C1	C2	ØD	F
8021	[0.79]	[1.97]	[0.47]	-	[1.50]	[2.26]	[1.88]	[1.56]	[0.63]	[0.13]	[0.21]	[0.56]
8021-UE	20	50	12		38,2	57,4	47,9	39,6	16	3,2	5,3	14,3
8071	[1.97]	[3.00]	[0.39]	[0.39]	[1.56]	[2.81]	[2.12]	[1.65]	[0.75]	[0.13]	[0.28]	[0.34]
8071-UE	50	76,2	10	10	39,7	71,4	53,9	41,9	19,1	3,2	7,1	8,7

Model	H	H1	L	L1	L2	L3	M
8021	[2.40]	[4.44]	[9.86]	[2.25]	[0.44]	[1.31]	1/4
8021-UE	60,9	112,8	250,4	57,2	11	33,2	M6
8071	[2.63]	[5.12]	[10.74]	[2.72]	[0.40]	[1.83]	5/16
8071-UE	66,9	130	272,9	69	10,1	46,5	M8

817, 827 SERIES

Pneumatic Toggle Clamps | Product Overview

Features:
- Dual mounting surfaces for maximum flexibility
- Sensor ready for round or T-slot style sensors
- Built-in flow restriction eliminates need for external flow controls

Applications:
- Assembly
- Welding

Also Available:
See page MC-ACC-1 for spindle accessories

See page MC-PSC-38 for sensing options

817-**U**
817-**UE**



817-**S**
817-**SE**



827-**U**
827-**UE**



827-**S**
827-**SE**



Technical Information | Holding Capacities

	Maximum Holding Capacity		Max. Exerting Force @ 5 bar [72 PSI]						Accessories (Supplied)		
Model	Inner	Outer	Inner	Outer	Weight	Bore Size	Air Consumption† dm³ [ft³]	Port Size	Spindle Accessory	Flanged Washers	Bolt Retainer
817-U	[375 lbf] 1670 N	[200 lbf] 890 N	[369 lbf] 1648 N	[225 lbf] 1005 N	1,05 kg [2.31 lbs]	[1.26] 32	[0.015] 0,42	1/8NPT	--	507107	--
817-UE								G-1/8	225208-M		
817-S	[450 lbf] 2000 N		[360 lbf] 1608 N					1/8 NPT	--	--	207107
817-SE								G-1/8			
827-U	[600 lbf] 2670 N	[390 lbf] 1735 N	[491 lbf] 2200 N	[309 lbf] 1383 N	2,14 kg [4.71 lbs]	[1.57] 40	[0.029] 0,83	1/8 NPT	--	235106	--
827-UE								G-1/8	240208-M		
827-S	[700 lbf] 3110 N	[330 lbf] 1470 N		[281 lbf] 1257 N				1/8 NPT	--	--	210114
827-SE								G-1/8			

†Per double stroke at 5 bar [72 PSI]

Max Cylinder Pressure: 10bar [145psig]*
Max Operating Temp: -10°C to 90°C [-14°F to 194°F]
Replacement Seal Kit: 817: 802450-32-1-00
827: 810450-40-1-00
Replacement Clamp Assembly: 817-U-LC, 817-S-LC, 827-U-LC, 827-S-LC
Replacement Cylinder Assembly: 817: 807CYL, 827: 810CYL

*In no case should the inlet pressure be high enough to create an exerting force that exceeds the clamp's holding capacity. See Technical Appendix Section for details.

Sensor Accessories	**Item Number**
Round Reed Switch with Quick Disconnect	810169
T-slot Reed Switch with Quick Disconnect	8EA-109-1
Quick Disconnect 2M Extension Cable	CABL-010
Quick Disconnect 5M Extension Cable	CABL-013

See Pneumatic Accessories section for more options

Dimensions and technical information are subject to change without notice

817-**U**
817-**UE**



817-**U** / **817**-**S** / 827-**U** / 827-**S** 1/8" NPT
817-**UE** / 817-**SE** / 827-**UE**/ 827-**SE** G-1/8

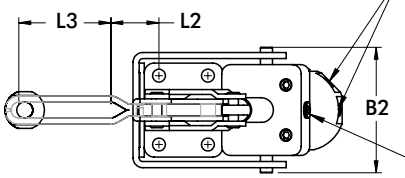

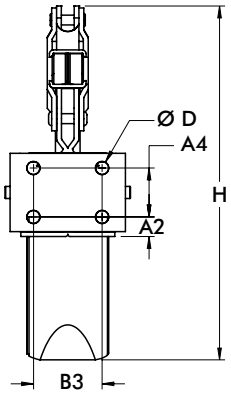

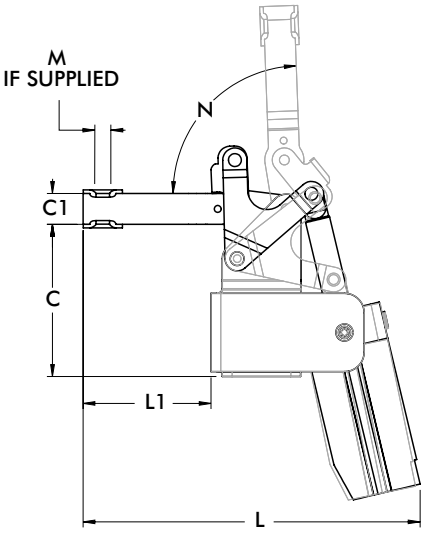

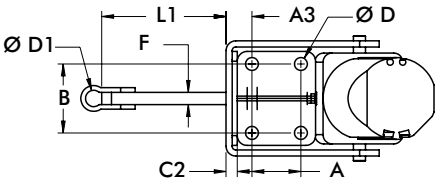

mm [INCH]

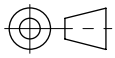

THIRD ANGLE PROJECTION

Mounting Options:
Use two bolts in the "side" mounting holes, to secure mounting bracket, when "top" mounting.

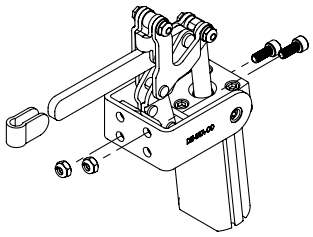

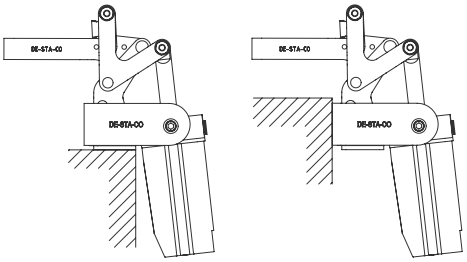

Top Mounting **Side Mounting**

Model	A	A2	A3	A4	B	B2	B3	C	C1	C2	C3	C4
817-U	[0.63] 16	[0.44] 11,2	[0.60] 15,1	[0.63] 16	[1.00] 25,4	[2.44] 62	[1.00] 25,4	[2.69] 68,3	[0.63] 16	[0.12] 3,1	[1.25] 31,8	[1.31] 33,3
817-UE												
817-S												
817-SE												
827-U	[1.25] 31,8	[0.51] 12,8	[0.66] 16,8	[1.25] 31,8	[1.75] 44,45	[3.08] 78,3	[1.75] 44,45	[3.89] 98,8	[0.79] 20	[0.12] 3,1	[2.00] 50,8	[1.76] 44,8
827-UE												
827-S								[3.91] 99,2	[0.75] 19,1			[1.78] 45,3
827-SE												

Model	ØD	ØD1	F	H	L	L1	L2	L3	M	N
817-U	[0.27] 6,7	-	-	[7.51] 190,7	[6.24] 158,6	[2.37] 60,3	[0.19] 4,8	[1.90] 48,4	5/16 M8	90°
817-UE										
817-S		[0.34] 8,7	[0.25] 6,4		[6.97] 175,5	[3.04] 77,2	-	-		
817-SE										
827-U	[0.33] 8,4	-	-	[9.04] 229,7	[8.61] 218,7	[3.27] 83,1	[1.23] 31,2	[2.35] 59,7	3/8 M10	88°
827-UE										
827-S		[0.42] 10,7	[0.31] 7,9		[8.49] 215,6	[3.18] 80,7	-	-		
827-SE										

868 SERIES

Pneumatic Toggle Clamps | Product Overview

Features:
- Hardened pins and bushing at all pivot points for long lifecycle
- Large, solid clamping arm is easily modified to suit application requirements
- Sensor ready for round or T-slot style sensors

Applications:
- Assembly
- Welding

Also Available:
See page MC-PSC-38 for sensing options

868
868-**E**



Technical Information | Holding Capacities

Model	Maximum Holding Capacity		Max. Exerting Force @ 5 bar [72 PSI]		Weight	Bore Size	Air Consumption† dm³ [ft³]	Port Size
	Inner	Outer	Inner	Outer				
868	[4000 lbf] 17800 N	[2400 lbf] 10675 N	[1704 lbf] 7637 N	[800 lbf] 3585 N	[17.0 lbs] 7,71 kg	[2.48] 63	[0.109] 3,08	1/4 NPT
868-E								G-1/4

†Per double stroke at 5 bar [72 PSI]

Max Cylinder Pressure: 10bar [145psig]*
Max Operating Temp: -10°C to 90°C [-14°F to 194°F]
Replacement Seal Kit: 850450-63-1-00
Replacement Clamp Assembly: 868-LC
Replacement Cylinder Assembly: 868CYL

*In no case should the inlet pressure be high enough to create an exerting force that exceeds the clamp's holding capacity. See Technical Appendix Section for details.

Sensor Accessories	**Item Number**
Round Reed Switch with Quick Disconnect	810169
T-slot Reed Switch with Quick Disconnect	8EA-109-1
Quick Disconnect 2M Extension Cable	CABL-010
Quick Disconnect 5M Extension Cable	CABL-013

See Pneumatic Accessories section for more options

Dimensions and technical information are subject to change without notice

868
868-**E**



mm [INCH]

THIRD ANGLE
PROJECTION

803 SERIES

Pneumatic Toggle Clamps | Product Overview

Features:
- Pneumatic version of Model 603 manual straight line action clamp
- Sensor ready for round or T-slot style sensors

Applications:
- Assembly
- Welding

Also Available:
See page MC-ACC-1 for spindle accessories

See page MC-PSC-38 for sensing options

High temperature version available Upon Request, add **–HT** to model number. Example: 803-U**–HT**

803
803-**ME**



Technical Information | Holding Capacities | Dimensions

Model	Maximum Holding Capacity	Maximum Exerting Force @ 5 bar [72 PSI]	Plunger Travel	Plunger Thread	Weight	Bore Size	Air Consumption† dm³ [ft³]	Port Size
803	[600 lbf] 2670 N	[675 lbf] 3015 N	[0.75] 19,1	5/16-18	[1.86 lbs] 0,84 kg	[1.26] 32	[0.015] 0,42	1/8 NPT
803-ME				M8				G-1/8

†Per double stroke at 5 bar [72 PSI]

Max Cylinder Pressure: 10bar [145psig]
Max Operating Temp: -10°C to 90°C [-14°F to 194°F]
Replacement Seal Kit: 802450-32-1-00
Replacement Clamp Assembly: 803-LC, 803-M-LC
Replacement Cylinder Assembly: 807CYL

*In no case should the inlet pressure be high enough to create an exerting force that exceeds the clamp's holding capacity. See Technical Appendix Section for details.

Sensor Accessories	Item Number
Round Reed Switch with Qk Disconnect	810169
T-slot Reed Switch with Qk Disconnect	8EA-109-1
Quick Disconnect 2M Extension Cable	CABL-010
Quick Disconnect 5M Extension Cable	CABL-013

See Pneumatic Accessories section for more options

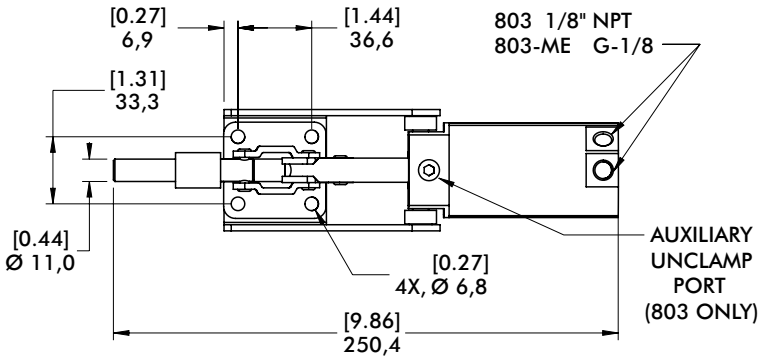

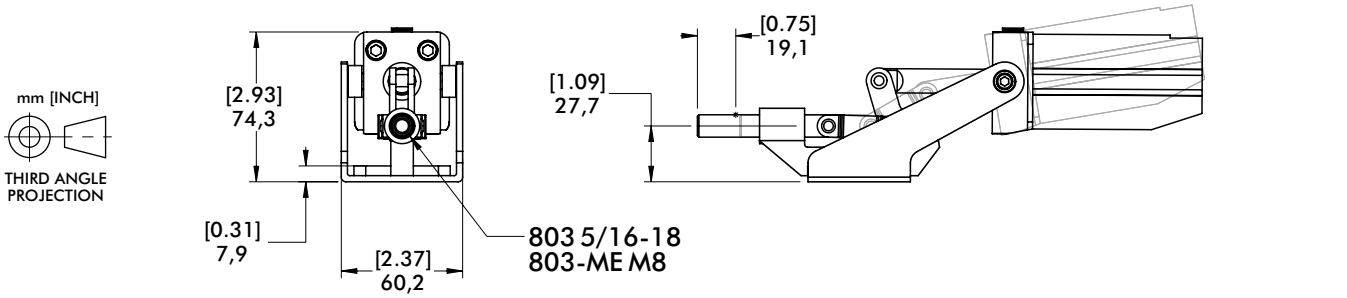

Dimensions and technical information are subject to change without notice

8031 SERIES

Pneumatic Toggle Clamps | Product Overview

Features:
- Fully enclosed straight line action clamp for the dirtiest environments
- Compact design with high holding capacity
- Sensor ready for round style sensors

Applications:
- Assembly
- Welding

Also Available:
See page MC-ACC-1 for spindle accessories

See page MC-PSC-38 for sensing options

8031 ⓘ



Technical Information | Holding Capacities | Dimensions

Model	Maximum Holding Capacity	Maximum Exerting Force @ 5 bar [72 PSI]	Plunger Travel	Plunger Thread	Weight	Bore Size	Air Consumption† dm³ [ft³]	Port Size
8031 ⓘ	[2000 lbf] 8900 N	[731 lbf] 3285 N	[0.75] 19,1	M8	[1.17 lbs] 2,58 kg	[1.26] 32	[0.006] 0,18	1/8 NPT

Max Cylinder Pressure: 10bar [145psig]*
Max Operating Temp: -10°C to 90°C [-14°F to 194°F]
*In no case should the inlet pressure be high enough to create an exerting force that exceeds the clamp's holding capacity. See Technical Appendix Section for details.

Sensor Accessories	Item Number
Round Reed Switch with Quick Disconnect	810169
Quick Disconnect 2M Extension Cable	CABL-010
Quick Disconnect 5M Extension Cable	CABL-013

See Pneumatic Accessories section for more options

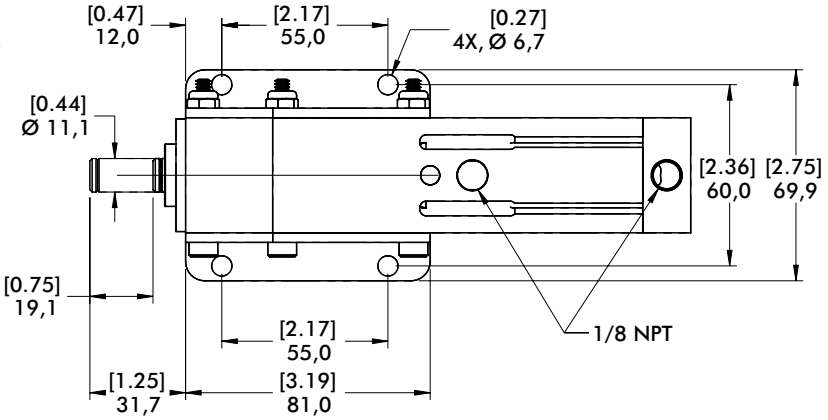

mm [INCH]
THIRD ANGLE PROJECTION

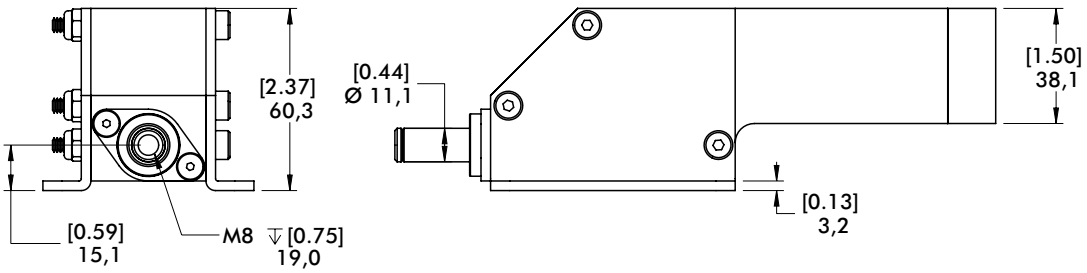

830 SERIES

Pneumatic Toggle Clamps | Product Overview

Features:
- Pneumatic version of Model 630 manual straight line action clamp
- Sensor ready for round or T-slot style sensors
- Built-in flow restriction eliminates need for external flow controls

Applications:
- Assembly
- Welding

Also Available:
See page MC-ACC-1 for spindle accessories

See page MC-PSC-38 for sensing options

830
830-**ME**



Technical Information | Holding Capacities | Dimensions

Model	Maximum Holding Capacity	Maximum Exerting Force @ 5 bar [72 PSI]	Plunger Travel	Plunger Thread	Weight	Bore Size	Air Consumption† dm³ [ft³]	Port Size
830	[2500 lbf] 11100 N	[800 lbf] 3582 N	[0.75] 19,1	3/8-16	2,79 kg [6.14 lbs]	[1.57] 40	[0.029] 0,83	1/8 NPT
830-ME				M10				G-1/8

†Per double stroke at 5 bar [72 PSI]

Max Cylinder Pressure: 10bar [145psig]
Max Operating Temp: -10°C to 90°C [-14°F to 194°F]
Replacement Seal Kit: 810450-40-1-00
Replacement Clamp Assembly: 830-LC, 830-M-LC
Replacement Cylinder Assembly: 810CYL

*In no case should the inlet pressure be high enough to create an exerting force that exceeds the clamp's holding capacity. See Technical Appendix Section for details.

Sensor Accessories	Item Number
Round Reed Switch with Quick Disconnect	810169
T-slot Reed Switch with Quick Disconnect	8EA-109-1
Quick Disconnect 2M Extension Cable	CABL-010
Quick Disconnect 5M Extension Cable	CABL-013

See Pneumatic Accessories section for more options

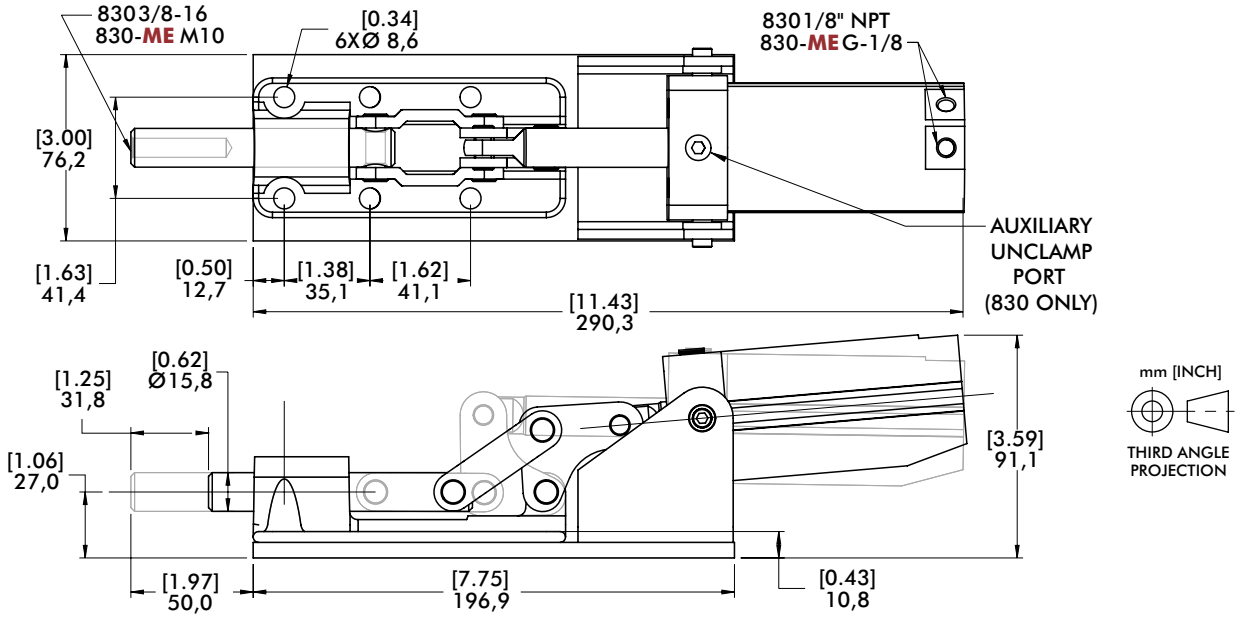

Dimensions and technical information are subject to change without notice

850 SERIES

Pneumatic Toggle Clamps | Product Overview

Features:
- Pneumatic version of Model 650 manual straight line action clamp
- Sensor ready for round or T-slot style sensors
- Built-in flow restriction eliminates need for external flow controls

Applications:
- Assembly
- Welding
- Light press operations

Also Available:
See page MC-ACC-1 for spindle accessories

See page MC-PSC-38 for sensing options

850ⓘ
850-**ME**ⓘ



Technical Information | Holding Capacities | Dimensions

Model	Maximum Holding Capacity	Maximum Exerting Force @ 5 bar [72 PSI]	Plunger Travel	Plunger Thread	Weight	Bore Size	Air Consumption† dm^3 [ft^3]	Port Size
850ⓘ	[16000 lbf] 71200 N	[1232 lbf] 5522 N	[2.00] 50,8	5/8-11	[16.66 lbs] 7,56 kg	[2.48] 63	[0.109] 3,08	1/4 NPT
850-MEⓘ				M16				G-1/4

ⓘ This item is available upon request. †Per double stroke at 5 bar [72 PSI]

Max Cylinder Pressure: 10bar [145psig]
Max Operating Temp: -10°C to 90°C [-14°F to 194°F]
Replacement Seal Kit: 850450-63-1-00
Replacement Clamp Assembly: 850-LC, 850-M-LC
Replacement Cylinder Assembly: 868CYL

*In no case should the inlet pressure be high enough to create an exerting force that exceeds the clamp's holding capacity. See Technical Appendix Section for details.

Sensor Accessories	**Item Number**
Round Reed Switch with Quick Disconnect	810169
T-slot Reed Switch with Quick Disconnect	8EA-109-1
Quick Disconnect 2M Extension Cable	CABL-010
Quick Disconnect 5M Extension Cable	CABL-013

See Pneumatic Accessories section for more options

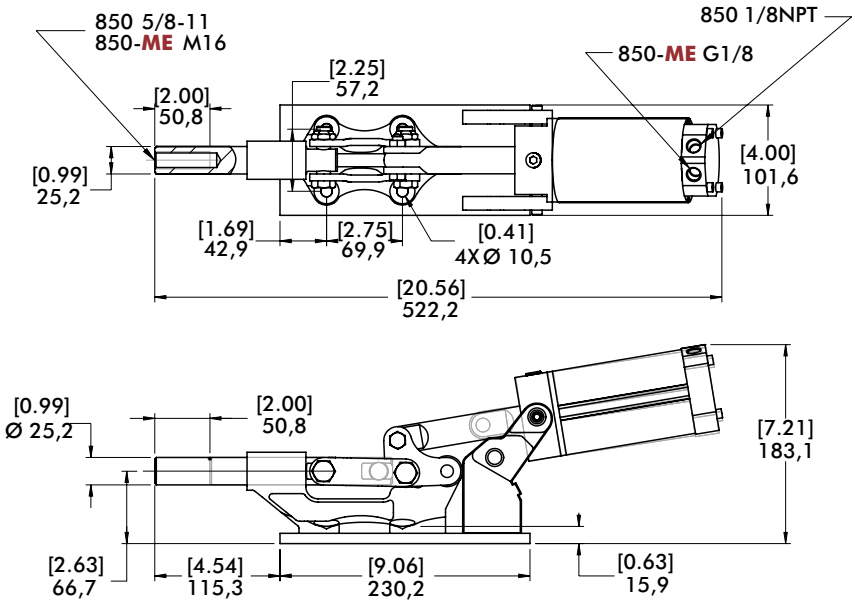

800, 1200 SERIES

Pneumatic Single-Action Hold Down Clamp | Product Overview

Features:
- Low profile and compact for mounting in tight spaces
- Uniform clamping force throughout full stroke
- Accommodates variable workpiece thickness
- Single acting - air advance, spring return

Applications:
- Assembly
- Welding
- Light machining

How it Works:
1. Clamp arm retracts fully for loading and unloading.
2. Clamp arm moves straight forward.
3. Clamp arm pivots down to hold workpiece.

800 | 800-E | 1200ⓘ | 1200-Eⓘ



Technical Information | Holding Capacities | Dimensions

Model	Inlet Pressure bar [PSI]	Exerting Force @ 4,8 bar [70 PSI] N [lbf]	Max. Pressure at Max. Mechanical Advantage† bar [PSI]	Clamping Range	Weight Kg [lbs]	Port Size
800	[70~150] 4,8~10,3	[800] 3560	4,8 [70]	[0.09] 2,3	[2.50] 1,13	1/4 NPT
800-E		[500] 2225		[0.16] 4,0		
1200ⓘ		[1200] 5340		[0.25] 6,4	[4.00] 1,81	
1200-Eⓘ		[775] 3450		[0.38] 9,6		

ⓘ This item is available upon request

Note: For use with pneumatic power only. This is a single acting device (air clamp, spring return), a 3-way air valve required for control.

Repair Kits: 800-00, 1200-00

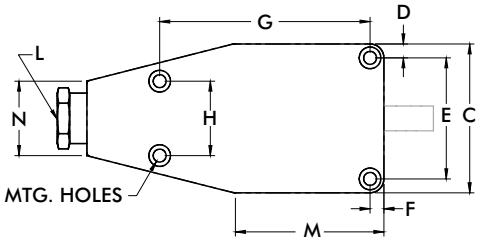

Note:
K (Forward Stroke)
R (Downward Stroke)

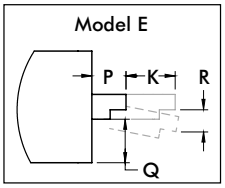

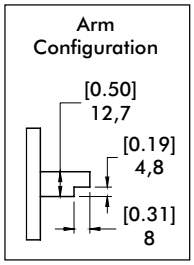

Model	A	B	C	D	E	F	G	H	K	L	M	N	P	Q	R	MNTG HOLES
800	[1.63] 41,4	[4.81] 122,8	[2.72] 69,1	[0.25] 6.4	[2.21] 56,1	[0.25] 6,4	[3.13] 79,5	[1.19] 30,2	[0.50 12,7	1/4 NPT	[2.31] 58,37	[1.50] 38,1	-	[0.59] 15,0	[0.09] 2,3	[0.26] 6,6
800-E													[0.50] 12,7		[0.16] 4,1	
1200	[2.25] 57,2	[6.00] 152,4	[3.00] 76.2	[0.28] 7.1	[2.44] 62	[0.28] 7,1	[4.25] 108	[1.50] 38,1	[0.69] 17,5		[3.00] 76.2	[1.38] 35,1	-	[0.63] 16	[0.25] 6,4	
1200-E													[0.69] 17,5		[0.38] 9,7	

Dimensions and technical information are subject to change without notice

Notes

9500 SERIES

Pneumatic Swing Clamps | Product Overview

Features:

- Ideal for tight spaces with an arm motion that rotates at the top of the stroke
- Includes a rod weld cover to protect the rod throughout the entire stroke
- Can be mounted on any face with optional side flange mounting kit
- Switch ready for Ø4mm or 6.5mm x 5mm sensors

Covered under one or more U.S./International Patents

Applications:

- Assembly
- Welding
- Light machining

Also Available:

See page MC-PSC-6 for mounting options
See page MC-PSC-7 for clamping arms
See page MC-PSC-40 for sensing options

9522-2



9530-2



9540-2



9550-2



Shown with optional clamping arm.

Technical Information

Model	Swing Direction	Total Stroke [in] mm	Ports	Vertical Clamping Stroke* [in] mm	Clamping Force @ [lbf] N†	Bore Size [in] mm	Air Consumption‡ dm³ [in³]	Weight [lb] kg	Replacement Seal Kit
9522-2L	LH	[0.50] 13	M5	[0.50] 13	[34] 150	[0.86] 22	[0.004] 0,10	[0.68] 0,31	952292
9522-2R	RH								
9530-2L	LH	[0.79] 20	1/8NPT	[0.79] 20	[76] 340	[1.26] 32	[0.010] 0,29	[1.25] 0,57	953092
9530-2GL			G-1/8						
9530-2R	RH		1/8NPT						
9530-2GR			G-1/8						
9540-2L	LH		1/8NPT		[123] 550	[1.57] 40	[0.016] 0,46	[1.98] 0,90	954092
9540-2GL			G-1/8						
9540-2R	RH		1/8NPT						
9540-2GR			G-1/8						
9550-2L	LH		1/8NPT		[196] 870	[1.97] 50	[0.026] 0,74	[3.33] 1,51	955092
9550-2GL			G-1/8						
9550-2R	RH		1/8NPT						
9550-2GR			G-1/8						

***No stroke travel during clamp arm rotation.**

†with standard clamping arm at 5 bar [72psi]. ‡Per double stroke at 5 bar [72psi]

Operating Pressure Range: 3 bar [45 psig] to 8 bar [120 psig]
Maximum Operating Temperature: 60°C [140°F]

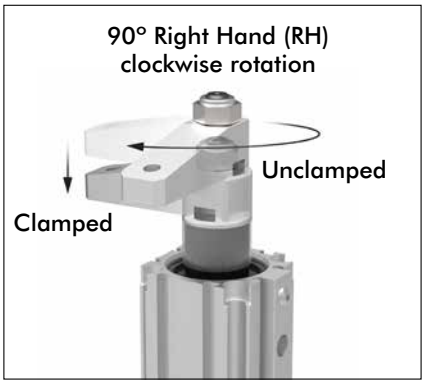

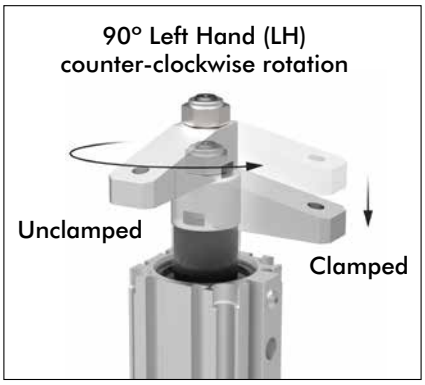

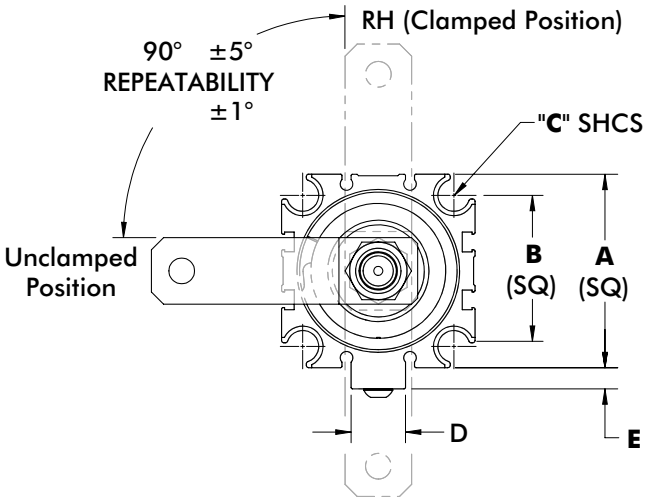

mm [INCH]

THIRD ANGLE PROJECTION

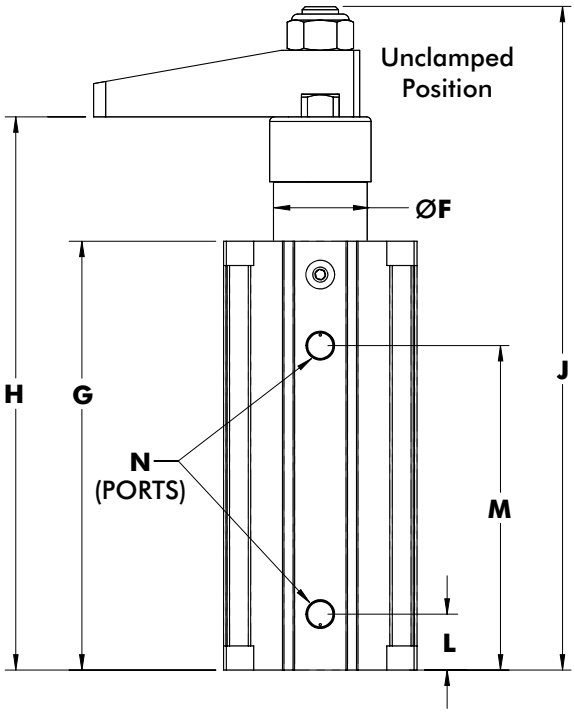

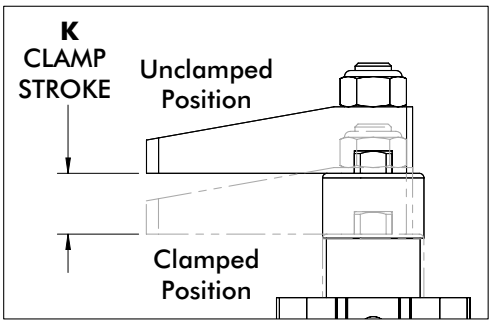



Shown with optional clamping arm.

Model	A	B	C	D	E	F	G	H	J	K	L	M	N
9522-2	[1.42] 36	[1.00] 25,4	M5 (#10)	--	--	[0.82] 21	[3.77] 95,8	[4.79] 121,8	[5.72] 145,7	[0.50] 13	[0.43] 11	[2.90] 73,8	M5
9530-2	[1.81] 46	[1.34] 34	M6 (1/4")	[0.55] 14	[0.16] 4	[0.96] 24,4	[4.48] 113,7	[6.09] 154,8	[7.33] 186	[0.79] 20	[0.61] 15,5	[3.39] 86,2	1/8NPT
9530-2G													G-1/8
9540-2	[2.05] 52	[1.57] 40			[0.20] 5	[1.13] 28,7	[4.63] 117,6	[6.29] 159,7	[7.52] 190,9		[0.65] 16,5	[3.43] 87,1	1/8NPT
9540-2G													G-1/8
9550-2	[2.52] 64	[1.97] 50	M8 (5/16")	[0.71] 18	[0.28] 7	[1.32] 33,5	[5.58] 141,8	[7.20] 182,9	[8.64] 219,3		[0.73] 18,5	[4.22] 107,3	1/8NPT
9550-2G													G-1/8

9500 SERIES

Pneumatic Swing Clamps | Clamping Forces

Series 9522-2 Clamping Force

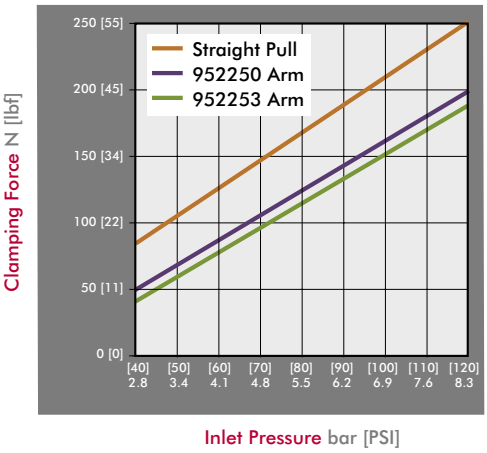

Series 9530-2 Clamping Force

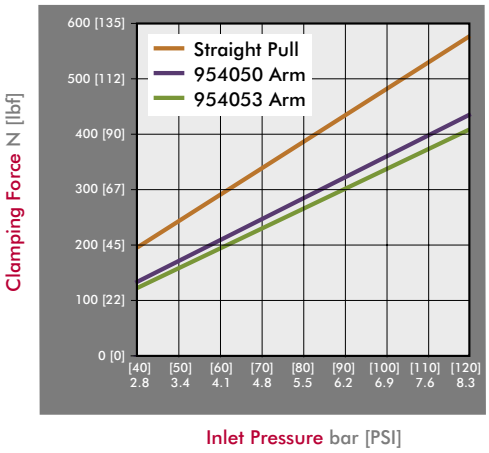

Series 9540-2 Clamping Force

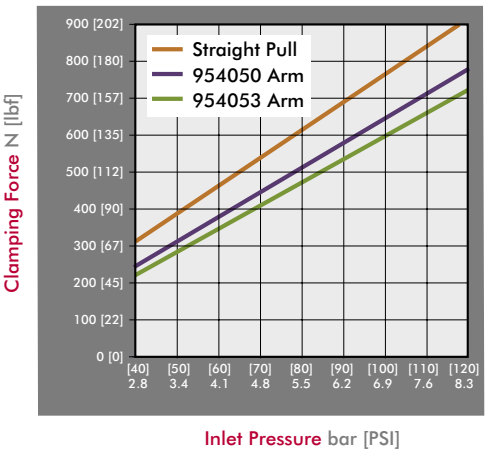

Series 9550-2 Clamping Force

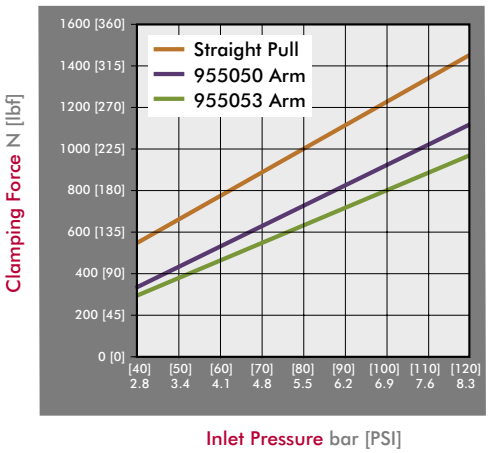

Guidelines

DESTACO Pneumatic Swing Clamps are designed for long life when using standard clamping arms and spindles. In the event that a longer arm or additional weight is needed, please consult these charts for the allowable weight and length.

Example: 9522-2
At a weight of 80 gr, the maximum length of the arm is approximately 120mm.

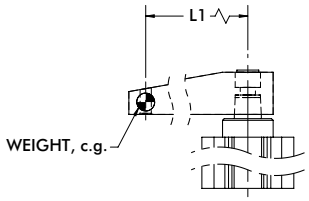

All data refers to an operating pressure of 5 bar [72psi] and an opening and closing time of 1 second.

9522-2 Clamp Arm Weight

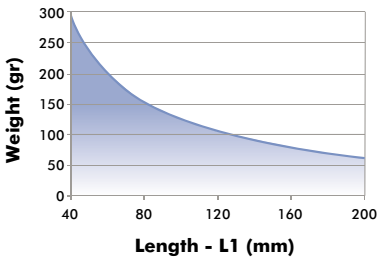

9530-2 Clamp Arm Weight

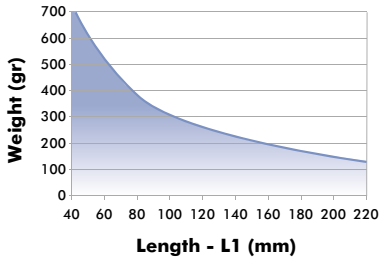

9540-2 Clamp Arm Weight

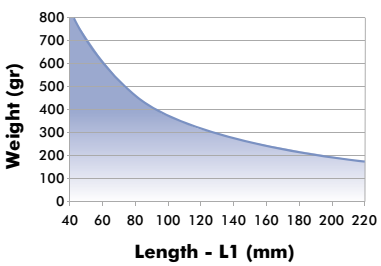

9550-2 Clamp Arm Weight

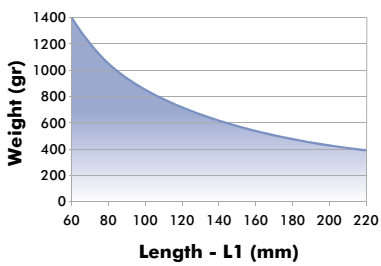

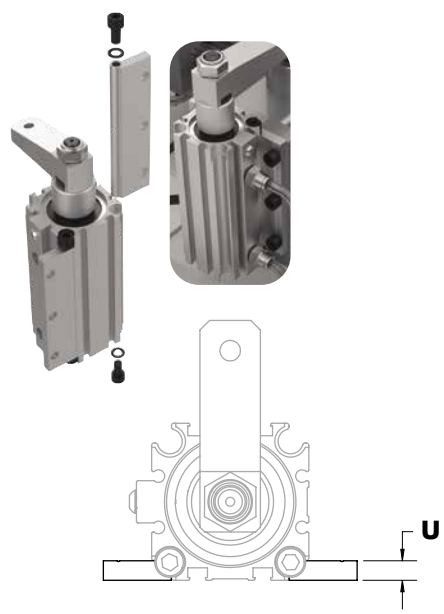

Optional Side Flange Mounting

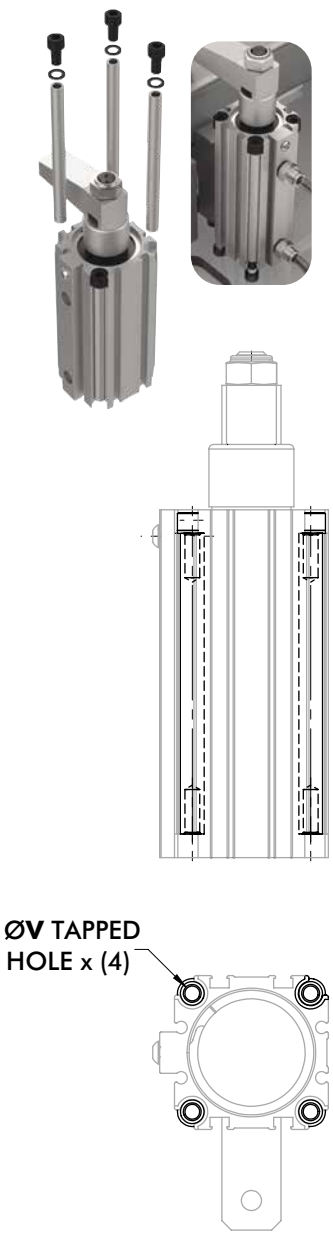

Optional Tapped Hole Mount

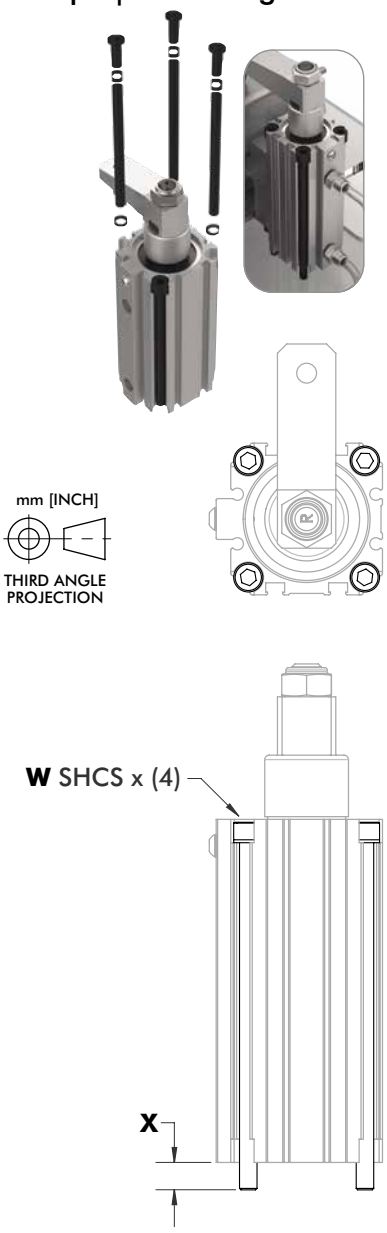

Optional Standard Mount

Model	P	Q	R	S	T	U	V	W	X	Side Flange Kit	Tapped Hole Kit	Standard Mount Kit
9522-2	[0.41] 10,4	[1.48] 37,5	[1.91] 48,5	[2.26] 57,5	[0.22] 5,5	[0.22] 5,5	M5	M5x100	[0.36] 9,2	952260	952261	952262
9530-2	[0.76] 19,4		[2.68] 68	[3.07] 78	[0.26] 6,5	[0.26] 6,5	M6	M6x120	[0.52] 13,3	953060	953061	953062
9530-2G												
9540-2	[0.84] 21,3		[2.91] 74	[3.31] 84					[0.37] 9,4	954060	954061	
9540-2G												
9550-2	[0.82] 20,9	[1.97] 50	[3.66] 93	[4.17] 106	[0.33] 8,5	[0.31] 8	M8	M8x150	[0.59] 15	955060	955061	955062
9550-2G												

Refer to NPN-9500-2 for mounting instructions

9500 SERIES

Pneumatic Swing Clamps | Clamping Arms

Features:

- Lightweight aluminum construction
- Designed for use with 9500-2 series clamps

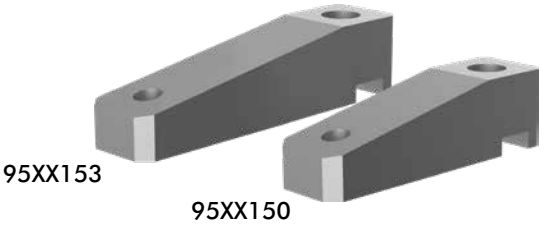

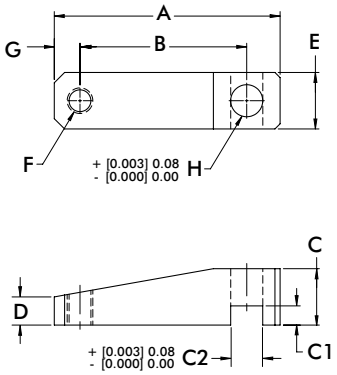

Part Number	Used with Model	A	B	C	C1	C2	D	E	F	G	H	Weight [lbs] kg
9522150	9522-2	[2.28] 58	[1.77] 45	[0.59] 15	[0.16] 4	[0.315] 8,01	[0.30] 7.50	[0.59] 15	M6	[0.20] 5	[0.315] 8,00	[0.06] 0,025
9522153		[3.07] 78	[2.56] 65									[0.08] 0,034
9540150	9530-2, 9540-2	[2.76] 70	[1.97] 50	[0.79] 20	[0.18] 4,6	[0.394] 10,01	[0.39] 10	[0.79] 20	M8	[0.39] 10	[0.394] 10,00	[0.12] 0,054
9540153		[3.94] 100	[3.15] 80									[0.17] 0,079
9550150	9550-2	[3.46] 88	[2.56] 65	[0.87] 22	[0.30] 7,5	[0.493] 12,51	[0.43] 11	[0.87] 22	M10		[0.492] 12,50	[0.18] 0,081
9550153		[4.45] 113	[3.54] 90									[0.23] 0,11

89R SERIES

Pneumatic Swing Clamps | Product Overview

Features:
- Swing direction is field adjustable between left, right, or straight. (20mm not linear adjustable)
- Switch ready for Ø4mm or 6.5mm x 5mm sensors
- Lightweight and robust, designed for several million cycles
- Clamp arm sold separately

Applications:
- Assembly
- Welding
- Light machining

Also Available:
See page MC-PSC-11 thru 13 for clamping arms and mounting accessories

See page MC-PSC-40 for sensing options

89R



Technical Information

Model	Swing Direction*	Total Stroke [in] mm	Stroke During Rotation [in] mm	Vertical Clamp Stroke [in] mm	Clamping Force† [lbf] N	Bore Size [in] mm	Air Consumption‡ [ft³] dm³	Weight [lbs] kg	Replacement Seal Kit
89R20-010-2	LH, RH	[0.83] 21	[0.43] 11	[0.39] 10	[18] 80	[0.79] 20	[0.002] 0,07	[0.66] 0,3	89R20-00
89R32-010-2	LH, RH, STRT	[1.10] 28	[0.61] 18		[55] 245	[1.26] 32	[0.009] 0,25	[1.32] 0,6	89R32-00
89R40-010-2		[1.24] 31,5	[0.85] 21,5		[85] 380	[1.57] 40	[0.015] 0,43	[2.09] 0,95	89R40-00
89R40-025-2		[1.83] 46,5		[0.98] 25			[0.022] 0,63	[2.43] 1,1	
89R50-025-2		[2.05] 52	[1.06] 27		[138] 614	[1.97] 50	[0.040] 1,13	[3.97] 1,8	89R50-00
89R63-025-2		[2.30] 58,5	[1.32] 33,5		[218] 970	[2.48] 63	[0.072] 2,04	[6.17] 2,8	89R63-00

*Swing direction is field adjustable. †with standard clamping arm 5 bar [72psi]. ‡per double stroke at 5 bar [72psi]

Operating Pressure Range: 3 bar [45 psig] to 8 bar [120 psig]
Maximum Operating Temperature: 60°C [140°F]

Note:
Switches are optional. To order with (2) 8EA-109-1 switches, add **A** to the end of the model. Ex. 89R32-010-2**A**

89R SERIES

Pneumatic Swing Clamps | Dimesnsions

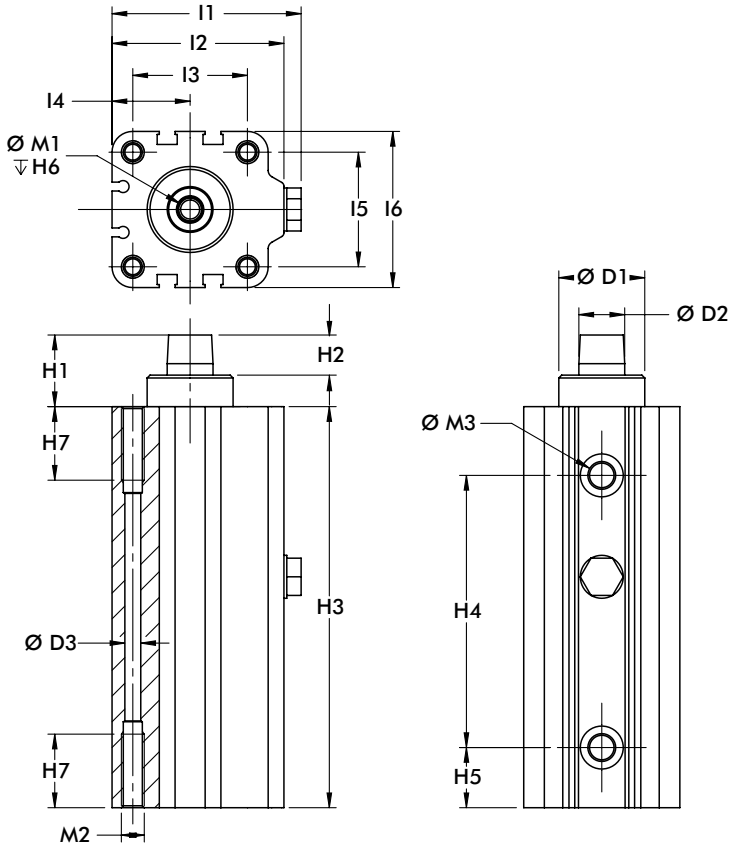

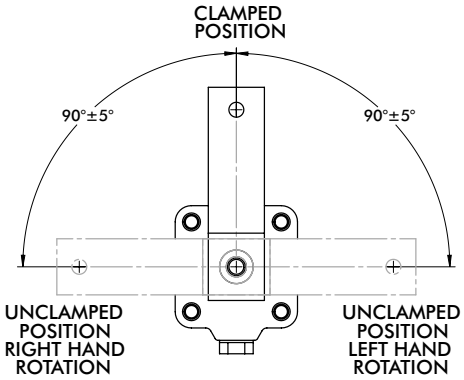

mm [INCH]

THIRD ANGLE
PROJECTION

Model	ØD1 H9	ØD2 F7	ØD3	H1	H2	H3	H4	H5	H6	H7	L1	L2
89R20-010-2	[0.71] 18	[0.39] 10	[0.18] 4,6	[0.78] 19,8	[0.47] 11,9	[4.15] 105,5	[2.60] 66	[0.52] 13,2	[0.59] 15	[0.55] 14	[1.56] 39,5	[1.38] 35
89R32-010-2	[0.87] 22	[0.47] 12	[0.22] 5,5	[0.93] 23,7	[0.43] 11	[4.92] 125	[3.27] 83	[0.69] 17,5	[0.67] 17	[0.63] 16	[2.36] 60	[2.13] 54
89R40-010-2	[1.18] 30	[0.63] 16		[0.98] 25		[5.51] 140	[3.74] 95	[0.83] 21		[0.98] 25	[2.60] 66	[2.36] 60
89R40-025-2						[6.69] 170	[4.92] 125					
89R50-025-2	[1.57] 40	[0.71] 18	[0.29] 7,4	[1.24] 31,4		[7.70] 195,5	[5.39] 137	[1.05] 26,7	[0.98] 25		[3.09] 78,5	[2.85] 72,5
89R63-025-2	[1.77] 45	[0.78] 20	[0.37] 9,3	[1.30] 33	[0.59] 15	[8.33] 211,5	[6.08] 154,5	[1.04] 26,5			[3.74] 95	[3.46] 88

Model	L3	L4	L5	L6	M1	M2	M3
89R20-010-2	[0.87] 22	[0.63] 16	[0.87] 22	[1.26] 32	M5	M6	M5
89R32-010-2	[1.42] 36	[0.94] 24	[1.26] 32	[1.77] 45	M6	M8	G-1/8
89R40-010-2	[1.57] 40	[1.07] 27,3	[1.57] 40	[2.15] 54,5	M8		
89R40-025-2							
89R50-025-2	[1.97] 50	[1.28] 32,5	[1.97] 50	[2.56] 65	M10	M10	
89R63-025-2	[2.44] 62	[1.57] 40	[2.44] 62	[3.15] 80		M12	G-1/4

Series 89R Clamping Force
(w/ standard clamping arm)

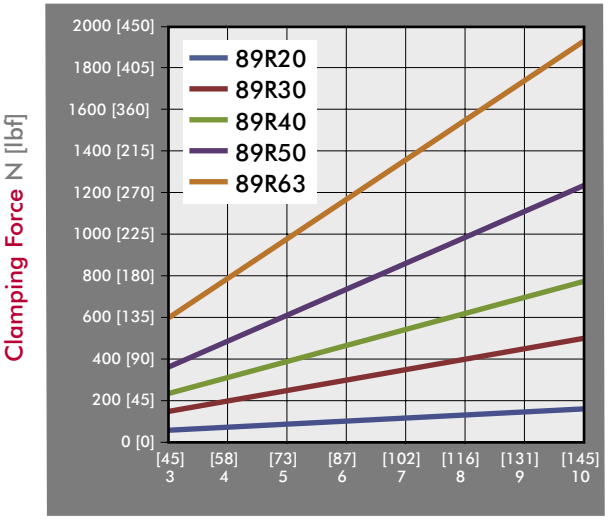

Guidelines

DESTACO Pneumatic Swing Clamps are designed for long life when using standard clamping arms and spindles. In the event that a longer arm or additional weight is needed, please consult these charts for the allowable weight and length.

Example: 89R32
At a weight of 80 gr, the maximum length of the arm is approximately 90mm.

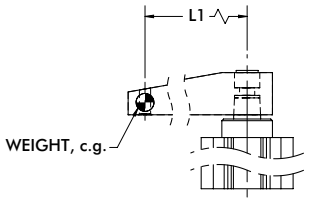

All data refers to an operating pressure of 5 bar [72psi] and an opening and closing time of 1 second.

89R20 & 89R32 Clamp Arm Weight

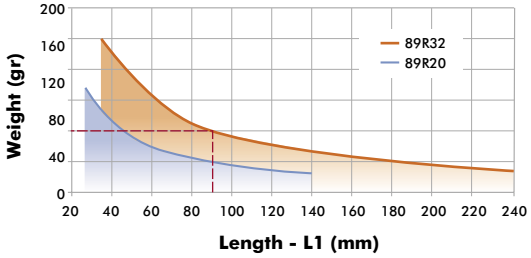

89R40 & 89R50 Clamp Arm Weight

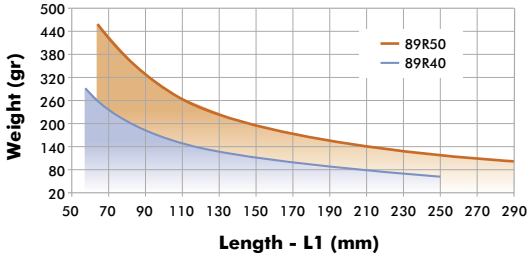

89R63 Clamp Arm Weight

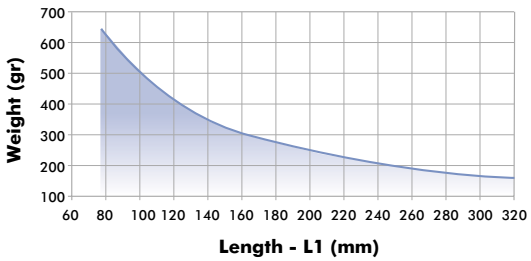

89R SERIES

Pneumatic Swing Clamps | Clamping Arms

Features:

- Lightweight aluminum construction
- Locking tapered connection for 360 deg. arm positioning



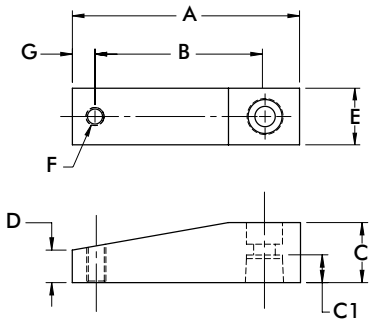

Part Number	Used with Model	A	B	C	C1	D	E	F	G	Weight [lbs] kg
8JG-215-1	89R20-010-2	[2.64] 67	[2.05] 52	[0.59] 15	[0.33] 8,5	[0.33] 8,5	[0.59] 15	M6	[0.28] 7	[0.08] 0,04
8JG-217-1	89R32-010-2	[3.15] 80	[2.36] 60	[0.79] 20	[0.37] 9,5		[0.79] 20	M8	[0.39] 10	[0.14] 0,06
8JG-218-1	89R40-010-2, 89R40-025-2	[3.74] 95	[2.76] 70	[0.98] 25	[0.45] 11,5	[0.55] 14	[0.98] 25			[0.28] 0,13
8JG-219-1	89R50-025-2	[4.17] 106	[3.15] 80	[1.18] 30	[0.59] 15	[0.57] 14,5	[1.18] 30			[0.42] 0,19
8JG-220-1	89R63-025-2	[4.72] 120	[3.54] 90	[1.38] 35	[0.67] 17	[0.67] 17	[1.38] 35	M10	[0.47] 12	[0.66] 0,30

Clamping Arm Adapters

Features:

- For attaching custom made clamp arms
- 360° rotatable arm
- Aluminum construction

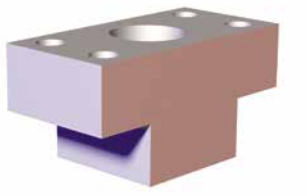

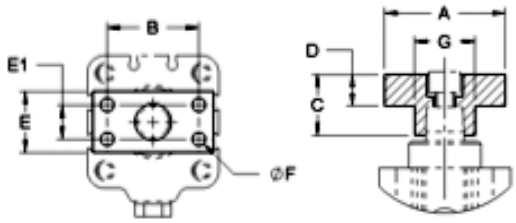

Part Number	Used with Model	A	B	C	D	E	E1	F	Weight [lbs] kg
8MA-084-1	89R20-010-2	[1.57] 40	[1.10] 28	[0.59] 15	[0.32] 8	[0.59] 15	--	[0.22] 5,5 (2x)	[0.03] 0,014
8MA-086-1	89R32-010-2	[1.97] 50	[1.38] 35	[0.79] 20	[0.43] 11	[0.79] 20			[0.08] 0,035
8MA-087-1	89R40-010-2, 89R40-025-2		[1.50] 38	[0.98] 25	[0.51] 13	[0.98] 25	[0.55] 14	[0.22] 5,5 (4x)	[0.11] 0,050
8MA-088-1	89R50-025-2	[2.36] 60	[1.77] 45	[1.18] 30	[0.59] 15	[1.18] 30	[0.59] 15	[0.28] 7 (4x)	[0.19] 0,085
8MA-089-1	89R63-025-2	[2.56] 65	[1.89] 48	[1.38] 35	[0.67] 17	[1.38] 35	[0.71] 18	[0.35] 9 (4x)	[0.28] 0,125

Dimensions and technical information are subject to change without notice

Features:

- For recessed mounting
- Variable height adjustment
- Can be used with switches
- For use with the **89R** Series Pneumatic Swing Clamps



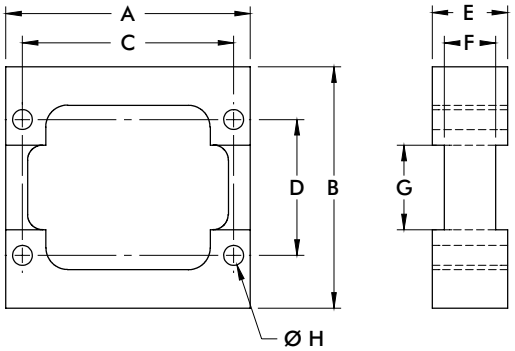

Part Number	Used with Model	A	B	C	D	E	F	G	H	Weight [lbs] kg
8MA-092-1	89R20-010-2	[2.24] 57	[2.17] 55	[1.85] 47	[0.94] 24	[0.59] 15	--	--	[0.28] 5,5	[0.22] 0,10
8MA-094-1	89R32-010-2	[3.19] 81	[2.95] 75	[2.55] 70	[1.57] 40	[0.98] 25	[0.67] 17	[1.10] 28	[0.26] 6,6	[0.44] 0,20
8MA-095-1	89R40-010-2		[3.15] 80		[1.77] 45					[0.55] 0,25
	89R40-025-2									
8MA-096-1	89R50-025-2	[4.00] 101,5	[3.94] 100	[3.37] 85,5	[1.97] 50			[1.46] 37	[0.35] 9	[0.88] 0,40

Mounting Feet

Features:

- Can be mounted on bottom side or front side
- Can be mounted on 4 sides of the cylinder
- For use with **89R** Series Pneumatic Swing Clamps



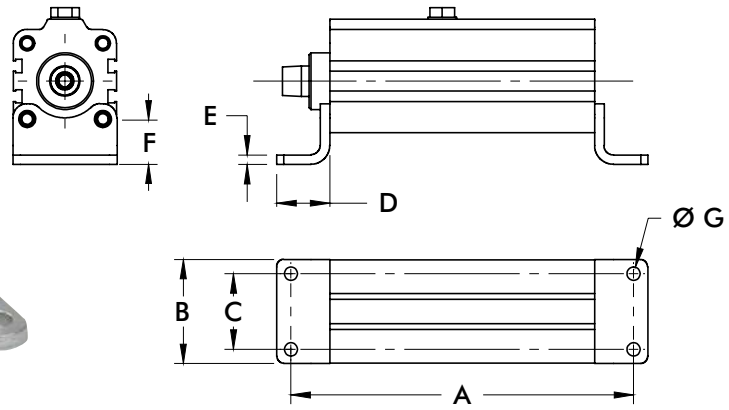

Part Number	Used with Model	A	B	C	D	E	F	G	Weight [lbs] kg
8MW-018-1	89R20-010-2	[5.41] 137,5	[1.38] 35	[0.87] 22	[0.87] 22	[0.16] 4	[0.63] 16	[0.28] 7	[0.08] 0,04
8MW-020-1	89R32-010-2	[6.54] 166	[1.97] 50	[1.38] 35	[1.10] 28	[0.20] 5	[0.71] 18		[0.15] 0,07
8MW-021-1	89R40-010-2	[7.13] 181	[2.17] 55	[1.57] 40			[0.94] 24		[0.22] 0,10
	89R40-025-2	[8.31] 211							
8MW-022-1	89R50-025-2	[9.39] 238,5	[2.64] 67	[1.97] 50	[1.26] 32	[0.24] 6		[0.35] 9	[0.33] 0,15
8MW-023-1	89R63-025-2	[10.37] 263,5	[3.35] 85	[2.44] 62	[1.57] 40		[1.06] 27	[0.43] 11	[0.52] 0,24

89R SERIES

Pneumatic Swing Clamps | End Mount Flanges

Features:

- Can be mounted on bottom side or top side
- For use with **89R** Pneumatic Swing Clamps



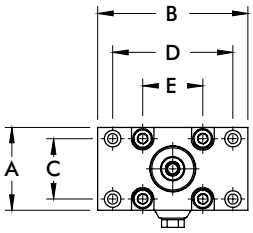

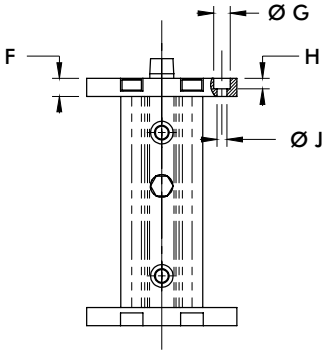

Part Number	Used with Model	A	B	C [±0.008] ±0,2	D [±0.008] ±0,2	E	F	G	H	J	Weight [lbs]kg
8MA-061-1	89R20-010-2	[1.26] 32	[2.56] 65	[0.71] 18	[1.97] 50	[0.87] 22	[0.39] 10	[0.43] 11	[0.28] 7	[0.26] 6,6	[0.07] 0,03
8MA-063-1	89R32-010-2	[1.97] 50	[3.15] 80	[1.26] 32	[2.52] 64	[1.26] 32	[0.47] 12				[0.20] 0,09
8MA-064-1	89R40-010-2, 89R40-025-2	[2.17] 55	[3.94] 100	[1.57] 40	[3.15] 80	[1.57] 40					[0.29] 0,13
8MA-065-1	89R50-025-2	[2.56] 65	[4.72] 120	[1.77] 45	[3.94] 100	[1.97] 50	[0.59] 15	[0.59] 15	[0.35] 9	[0.33] 8,5	[0.46] 0,21
8MA-066-1	89R63-025-2	[3.15] 80	[5.12] 130	[2.36] 60	[4.33] 110	[2.44] 62				[0.35] 8,8	[0.66] 0,30

Dimensions and technical information are subject to change without notice

89B SERIES

Pneumatic Swing Clamps | Product Overview

Features:
- Lightweight and robust, designed for several millions cycles
- Can be mounted from the side or the top
- Sensor ready for T-slot style sensors
- Metric design
- Clamp arm sold separately

Applications:
- Assembly
- Welding
- Light machining

Also Available:
See page MC-PSC-17 for clamping arms
See page MC-PSC-40 for sensing options

Series 89B



Technical Information

Model	Swing Direction	Total Stroke [in] mm **S**	Stroke During Rotation [in] mm **S1**	Vertical Clamp Stroke [in] mm **S2**	Clamping Force [lbf.] N†	Bore Size mm[in]	Air Consumption‡ [ft³] dm³	Weight [lbs] kg	Replacement Seal Kit
89B20-010-2R	RH	[0.79] 20	[0.39] 10	[0.39] 10	[29] 130	[0.79] 20	[0.003] 0,08	[1.46] 0,66	89B/E20-2-00
89B20-010-2L	LH								
89B32-010-2R	RH	[0.83] 21	[0.43] 11		[79] 350	[1.25] 32	[0.008] 0,22	[2.25] 1,02	89B/E32-2-00
89B32-010-2L	LH								
89B40-010-2R	RH	[0.94] 24	[0.55] 14		[130] 580	[1.57] 40	[0.014] 0,39	[3.17] 1,44	89B/E40-2-00
89B40-010-2L	LH								
89B50-025-2R	RH	[1.57] 40	[0.59] 15	[0.98] 25	[225] 1000	[1.97] 50	[0.036] 1,03	[5.95] 2,70	89B/E50-2-00
89B50-025-2L	LH								
89B63-008-2R	RH	[1.02] 26	[0.71] 18	[0.32] 8	[321] 1430	[2.48] 63	[0.038] 1,08	[6.39] 2,90	89B/E63-2-00
89B63-008-2L	LH								

†with standard clamping arm at 6 bar [87psi]. ‡per double stroke at 6 bar [87psi]

Operating Pressure Range: 3 bar [45 psig] to 6 bar [87 psig]
Maximum Operating Temperature: 80°C [176°F]

Note:
Switches are optional. To order clamp with (2) 8EA-109-1 switches, add **A** to the end of the model.
EX. 89B30-010-2R**A**. See page MC-PSC-40 for additional switch options.

89B SERIES

Pneumatic Swing Clamps | Dimensions

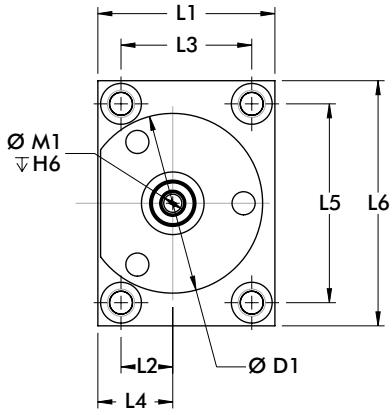



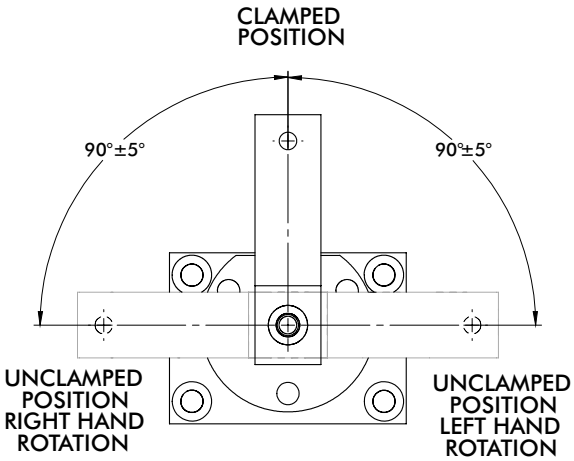

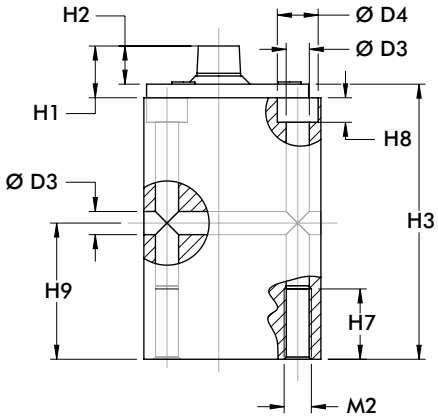

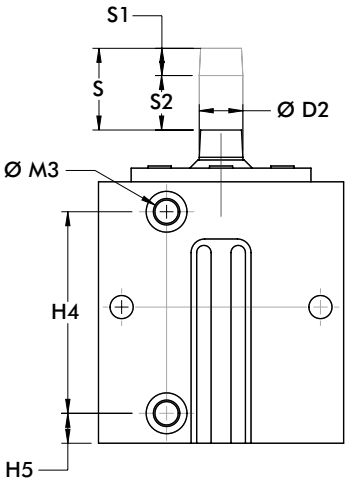

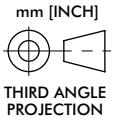

S = Total Stoke
S1 = Stroke during Rotation
S2 = Vertical Clamp Stroke

Model	ØD1	ØD2	ØD3	D4	H1	H2	H3	H4	H5	H6	H7	H8	H9	L1
89B20	[1.89] 48	[0.39] 10	[0.26] 6,6	[0.43] 11	[0.69] 17,5	[0.35] 9	[3.48] 88,5	[2.28] 58	[0.35] 9	[0.59] 15	[0.79] 20	[0.28] 7	[1.57] 40	[1.77] 45
89B32	[2.20] 56	[0.47] 12	[0.33] 8,5	[0.59] 15	[0.63] 16	[0.43] 11	[3.70] 94	[2.72] 69	[0.39] 10	[0.67] 17	[0.98] 25	[0.35] 9	[1.77] 45	[2.17] 55
89B40	[2.60] 66	[0.63] 16			[0.75] 19	[0.55] 14	[3.98] 101	[2.91] 74					[1.97] 50	[2.56] 65
89B50	[3.07] 78	[0.71] 18	[0.41] 10,5	[0.71] 18	[0.98] 25	[0.67] 17	[5.51] 140	[4.29] 109	[0.43] 11	[0.98] 25	[1.18] 30	[0.43] 11	[2.76] 70	[2.95] 75
89B63	[3.70] 94	[0.79] 20			[1.06] 27	[0.75] 19	[4.53] 115	[3.35] 85					[2.16] 55	[3.54] 90

Model	L2	L3	L4	L5	L6	M1	M2	M3
89B20	[0.45] 11,5	[1.18] 30	[0.75] 19	[2.36] 60	[2.95] 75	M5	M8	M5
89B32	[0.55] 14	[1.50] 38	[0.89] 22,5	[2.68] 68	[3.35] 85	M6	M10	G-1/8
89B40	[0.75] 19	[1.89] 48	[1.08] 27,5	[2.87] 73	[3.54] 90	M8		
89B50	[0.94] 24	[2.17] 55	[1.34] 34	[3.54] 90	[4.33] 110		M12	
89B63	[1.18] 30	[2.76] 70	[1.57] 40	[3.94] 100	[4.72] 120	M10		G-1/4

Mounting Options

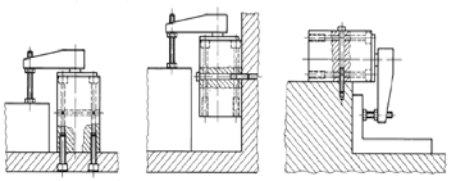

Series 89B Clamping Force
(w/ standard clamping arm)

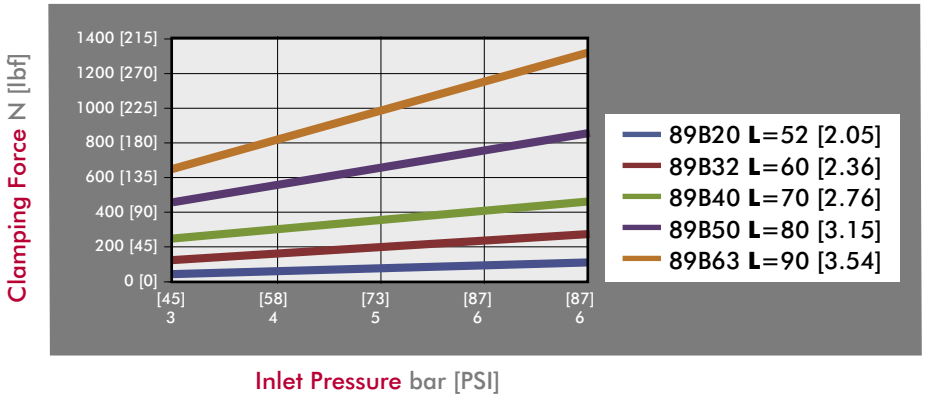

Guidelines

DESTACO Pneumatic Swing Clamps are designed for long life when using standard clamping arms and spindles. In the event that a longer arm or additional weight is needed, please consult these charts for the allowable weight and length.

Example: 89B32
At a weight of 80 gr, the maximum length of the arm is approximately 90mm.

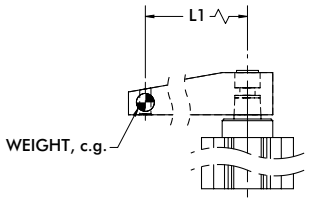

All data refers to an operating pressure of 5 bar [72psi] and an opening and closing time of 1 second.

89B20 & 89B32 Clamp Arm Weight

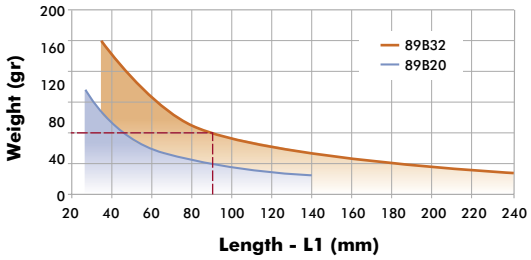

89B40 & 89B50 Clamp Arm Weight

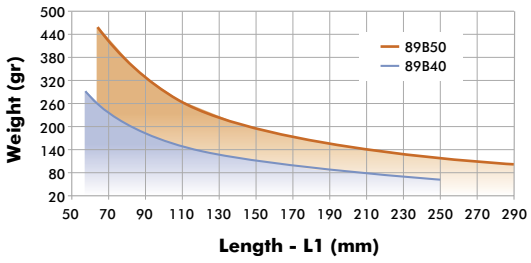

89B63 Clamp Arm Weight

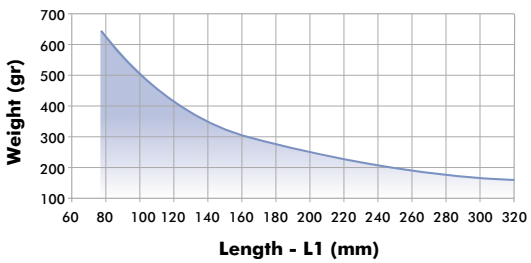

89B SERIES

Pneumatic Swing Clamps | Clamping Arm

Features:

- Lightweight aluminum construction
- Locking tapered connection for 360 deg. arm positioning



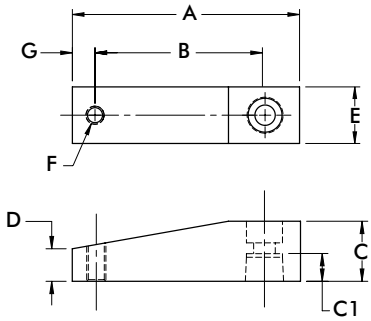

Part Number	Used with Model	A	B	C	C1	D	E	F	G	Weight [lbs] kg
8JG-215-1	89B20-010-2	[2.64] 67	[2.05] 52	[0.59] 15	[0.33] 8,5	[0.33] 8,5	[0.59] 15	M6	[0.28] 7	[0.08] 0,04
8JG-217-1	89B32-010-2	[3.15] 80	[2.36] 60	[0.79] 20	[0.37] 9,5		[0.79] 20	M8	[0.39] 10	[0.14] 0,06
8JG-218-1	89B40-010-2	[3.74] 95	[2.76] 70	[0.98] 25	[0.45] 11,5	[0.55] 14	[0.98] 25			[0.28] 0,13
8JG-219-1	89B50-025-2	[4.17] 106	[3.15] 80	[1.18] 30	[0.59] 15	[0.57] 14,5	[1.18] 30			[0.42] 0,19
8JG-220-1	89B63-008-2	[4.72] 120	[3.54] 90	[1.38] 35	[0.67] 17	[0.67] 17	[1.38] 35	M10	[0.47] 12	[0.66] 0,30

Clamping Arm Adapters

Features:

- For attaching custom made clamp arms
- 360° rotatable arm
- Aluminum construction

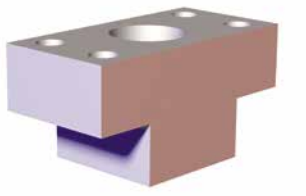

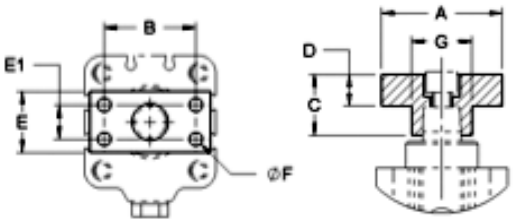

Part Number	Used with Model	A	B	C	D	E	E1	F	Weight [lbs] kg
8MA-084-1	89B20-010-2	[1.57] 40	[1.10] 28	[0.59] 15	[0.32] 8	[0.59] 15	--	[0.22] 5,5 (2x)	[0.03] 0,014
8MA-086-1	89B32-010-2	[1.97] 50	[1.38] 35	[0.79] 20	[0.43] 11	[0.79] 20			[0.08] 0,035
8MA-087-1	89B40-010-2		[1.50] 38	[0.98] 25	[0.51] 13	[0.98] 25	[0.55] 14	[0.22] 5,5 (4x)	[0.11] 0,050
8MA-088-1	89B50-025-2	[2.36] 60	[1.77] 45	[1.18] 30	[0.59] 15	[1.18] 30	[0.59] 15	[0.28] 7 (4x)	[0.19] 0,085
8MA-089-1	89B63-008-2	[2.56] 65	[1.89] 48	[1.38] 35	[0.67] 17	[1.38] 35	[0.71] 18	[0.35] 9 (4x)	[0.28] 0,125

Dimensions and technical information are subject to change without notice

Notes

8100, 8300 SERIES

Pneumatic Swing Clamps | Product Overview

Features:
- Lightweight and robust, designed for several millions cycles
- Block style body may be mounted from the side or the top.
- Sensor ready for use with round style sensors
- Clamp arm and spindle included

Applications:
- Assembly
- Welding
- Light machining

Also Available:
See page MC-PSC-22 for clamping arms
See page MC-PSC-40 for sensing options

8115
Right-hand Swing

8116
Left-hand Swing



8315
Right-hand Swing

8316
Left-hand Swing



Technical Information

Model	Swing Direction	Total Stroke [in] mm	Stroke During Rotation [in] mm	Vertical Clamp Stroke [in] mm	Clamping Force [lbf.] N†	Bore Size mm[in]	Air Consumption‡ [ft³] dm³	Weight [lbs] kg	Replacement Seal Kit
8115	RH	[0.85] 21,5	[0.47] 11,8	[0.38] 9,7	[25] 110	[0.75] 19,1	[0.002] 0,06	[0.68] 0,31	801560
8116	LH								
8315	RH	[1.25] 31,8	[0.75] 19,1	[0.50] 12,7	[89] 400	[1.50] 38,1	[0.014] 0,40	[2.00] 0,91	821560
8316	LH								

†with standard clamping arm at 5 bar [72psi]. ‡per double stroke at 5 bar [72psi]

Operating Pressure Range: 3 bar [45 psig] to 9 bar [130 psig]
Maximum Operating Temperature: -18°C to 60°C [0°F to 140°F]

Note:
To order without clamping arm add –**LA**
to the end of the model. Ex. 8315-**LA**



Dimensions and technical information are subject to change without notice

Pneumatic Swing Clamps | Dimensions



Unclamped



Clamped

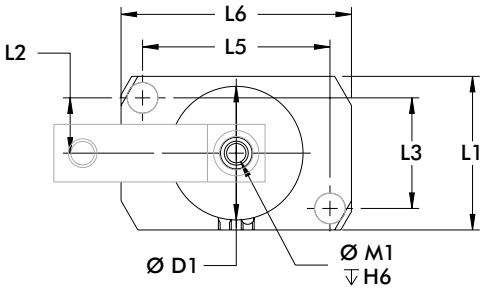

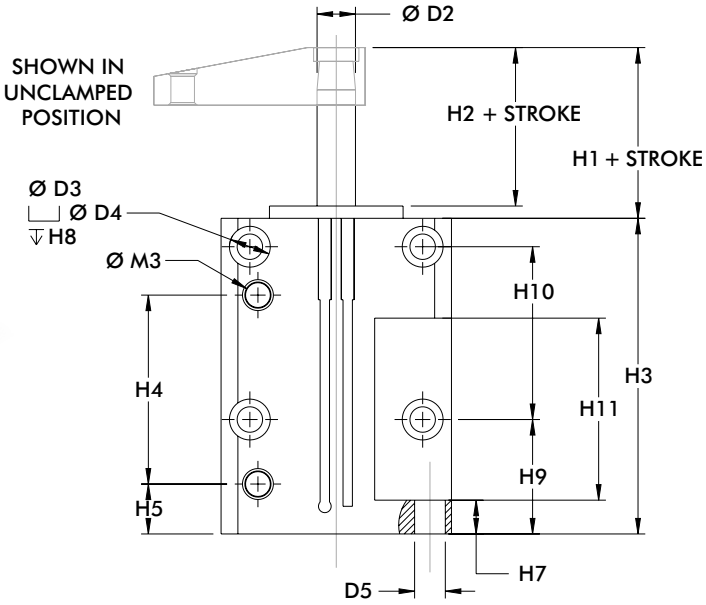

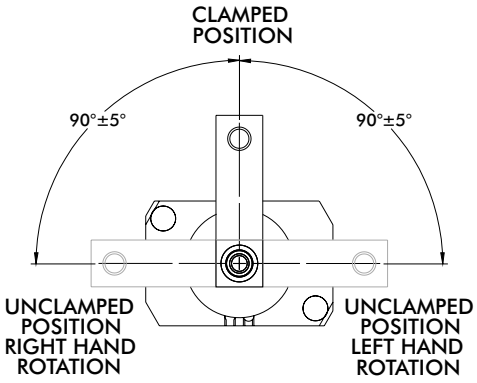

mm [INCH]

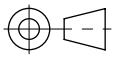

THIRD ANGLE
PROJECTION

Model	ØD1	ØD2	ØD3	ØD4	ØD5	Stroke	H1	H2	H3	H4	H5	H6
8115 8116	[1.23] 31,2	[0.44] 11,2	[0.20] 5,1	--	--	[0.85] 21,5	[0.53] 13,5	[0.41] 10,4	[3.37] 85,6	[1.45] 36,8	[0.35] 8,9	[0.75] 19,1
8315 8316	[1.74] 44,2	[0.50] 12,7	[0.33] 8,4	[0.53] 13,5	[0.40] 10,2	[1.25] 31,8	[0.97] 24,6	[0.81] 20,6	[4.11] 104,4	[2.46] 62,5	[0.65] 16,5	[0.67] 17

Model	H7	H8	H9	H10	H11	L1	L2	L3	L5	L6	M1	M3
8115 8116	[0.25] 6,4	--	[1.37] 34,8	[1.00] 25,4	[1.00] 25,4	[1.25] 31,8	[0.47] 11,9	[0.94] 23,9	[0.94] 23,9	[1.25] 31,8	¼-20	#10-32
8315 8316	[0.44] 11,2	[1.00] 25,4	[1.49] 37,9	[2.25] 57,2	[2.37] 60,2	[2.00] 50,8	[0.72] 18,3	[1.44] 36,6	[2.44] 62	[3.00] 76,2	5/16/18	1/8 NPT

Mounting Options

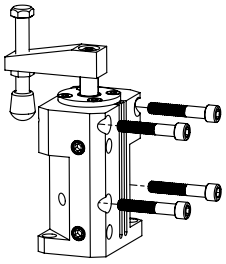

Can be mounted to the side or front of the fixture, or mounted back to back for multiple clamping operations.

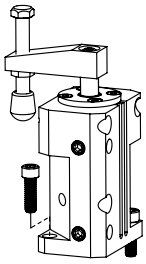

Mounted to the top of the work surface through the two mounting holes in the bottom of unit.

8100, 8300 SERIES

Pneumatic Swing Clamps | Clamping Forces

Series 8100, 8300 Clamping Force
(w/ standard clamping arm)

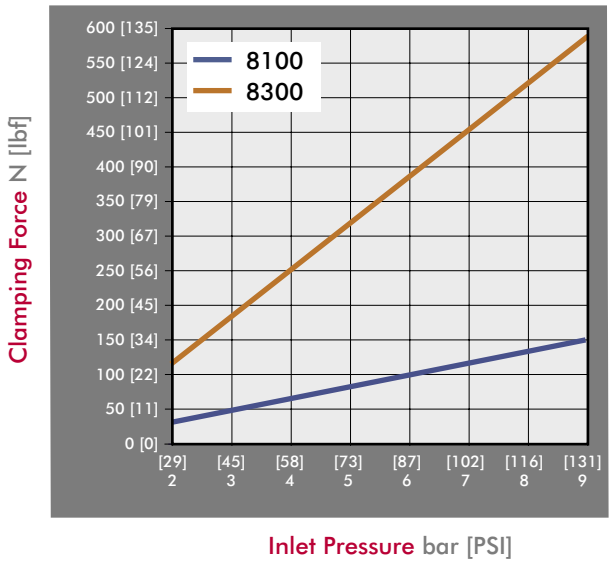

Guidelines

DESTACO Pneumatic Swing Clamps are designed for long life when using standard clamping arms and spindles. In the event that a longer arm or additional weight is needed, please consult these charts for the allowable weight and length.

Example: 8315
At a weight of 80 gr, the maximum length of the arm is approximately 90mm.

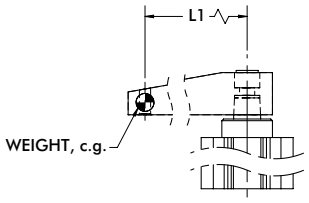

All data refers to an operating pressure of 5 bar [72psi] and an opening and closing time of 1 second.

8115/8116 Clamp Arm Weight

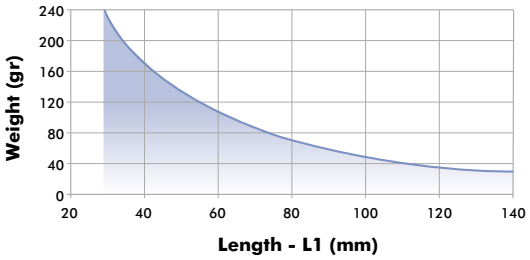

8315/8316 Clamp Arm Weight

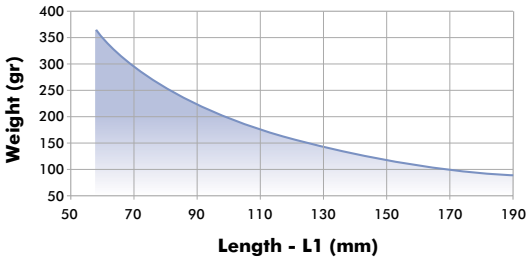

Features:

- Lightweight aluminum construction
- Locking tapered connection for 360 deg. arm positioning



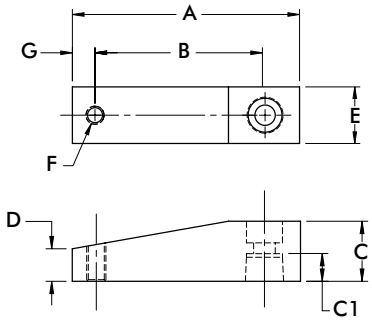

Part Number	Used with Model	A	B	C	C1	D	E	F	G	Weight [lbs] kg
801528	8115, 8116	[1.74] 44,2	[1.11] 28,2	[0.37] 9,4	[0.33] 8,3	[0.25] 6,4	[0.62] 15,7	#10-32	[0.32] 8,1	[0.03] 0,01
801529		[2.87] 72,9	[2.24] 56,9							
821512	8315, 8316	[2.75] 69,9	[2.00] 50,8	[0.75] 19,1	[0.57] 14,5	[0.38] 9,5	[0.75] 19,1	3/8-16	[0.38] 9,5	[0.05] 0,02
821513		[3.75] 95,3	[3.00] 76,2							

Clamping Arm Adapters

Features:

- For attaching custom made clamp arms
- 360° rotatable arm
- Aluminum construction

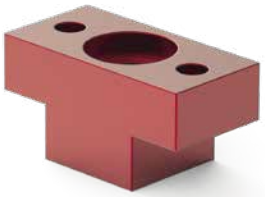

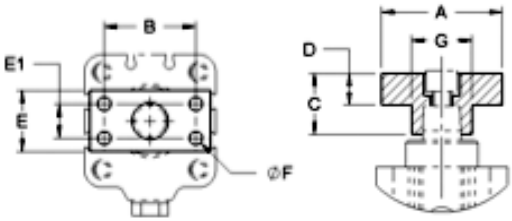

Part Number	Used with Model	A	B	C	D	E	E1	F	Weight [lbs] kg
801532	8115, 8116	[1.37] 34,8	[1.00] 25,4	[0.39] 9,1	[0.25] 6.4	[0.62] 15.7	--	#10-32 (2x)	[0.03] 0,014
821556	8315, 8316	[1.50] 38,1	[1.06] 26,9	[0.75] 19	[0.37] 9,4	[0.75] 19	--	1/4-20 (2x)	[0.05] 0,020

89E SERIES

Pneumatic Swing Clamps | Product Overview

Features:
- Lightweight and robust, designed for several millions cycles
- Threaded body may be mounted in a tapped hole or a clearance hole with optional mounting flange
- Metric design
- Clamp arm sold separately

Applications:
- Assembly
- Welding
- Light machining

Also Available:
See page MC-PSC-26 for clamping arms
See page MC-PSC-27 for mounting flanges

Series 89E



Technical Information

Model	Swing Direction	Total Stroke [in] mm **S**	Stroke During Rotation [in] mm **S1**	Vertical Clamp Stroke [in] mm **S2**	Clamping Force [lbf.] N†	Bore Size mm[in]	Air Consumption‡ [ft³] dm³	Weight [lbs] kg	Replacement Seal Kit
89E20-010-2R	RH	[0.79] 20	[0.39] 10	[0.39] 10	[29] 130	[0.79] 20	[0.003] 0,08	[0.64] 0,29	89B/E20-2-00
89E20-010-2L	LH								
89E32-010-2R	RH	[0.83] 21	[0.43] 11		[79] 350	[1.25] 32	[0.008] 0,22	[0.93] 0,42	89B/E32-2-00
89E32-010-2L	LH								
89E40-010-2R	RH	[0.94] 24	[0.55] 14		[130] 580	[1.57] 40	[0.014] 0,39	[1.76] 0,80	89B/E40-2-00
89E40-010-2L	LH								
89E50-025-2R	RH	[1.57] 40	[0.59] 15	[0.98] 25	[225] 1000	[1.97] 50	[0.036] 1,03	[3.22] 1,46	89B/E50-2-00
89E50-025-2L	LH								
89E63-008-2R	RH	[1.02] 26	[0.71] 18	[0.32] 8	[321] 1430	[2.48] 63	[0.038] 1,08	[3.68] 1,67	89B/E63-2-00
89E63-008-2L	LH								

†with standard clamping arm at 6 bar [87psi]. ‡per double stroke at 6 bar [87psi]

Operating Pressure Range: 3 bar [45 psig] to 10 bar [145 psig] (89E20 8 bar [116 psig] max.)
Maximum Operating Temperature: 80°C [176°F]



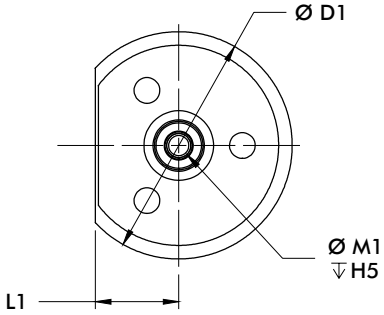

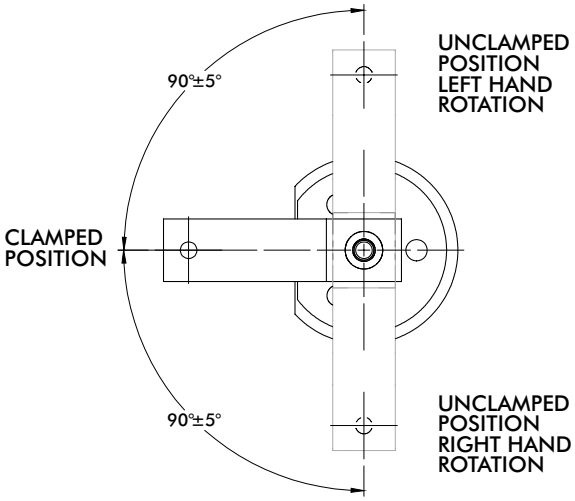

S = Total Stoke
S1 = Stroke during Rotation
S2 = Vertical Clamp Stroke

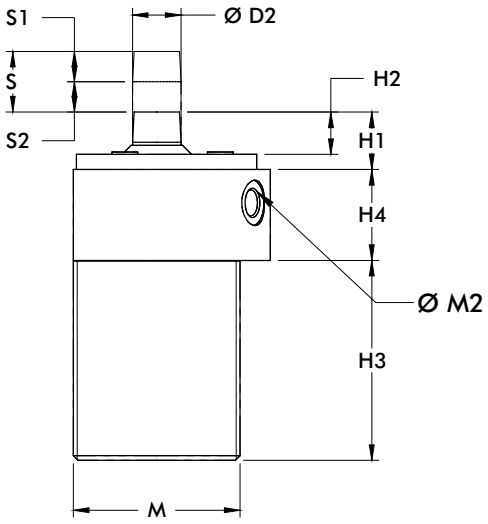

mm [INCH]

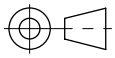

THIRD ANGLE PROJECTION

Model	ØD1	ØD2	H1	H2	H3	H4	H5	L1	M	M1	M2
89E20	[1.89] 48	[0.39] 10	[0.69] 17,5	[0.35] 9	[2.36] 60	[0.79] 20	[0.59] 15	[0.75] 19	M36X1,5	M5	M5
89E32	[2.52] 64	[0.47] 12	[0.63] 16	[0.43] 11	[2.72] 69		[0.67] 17	[0.89] 22,5	M42X1,5	M6	G-1/8
89E40	[2.95] 75	[0.63] 16	[0.75] 19	[0.55] 14	[2.60] 66			[1.08] 27,5	M55X2	M8	
89E50	[3.54] 90	[0.71] 18	[0.98] 25	[0.67] 17	[4.09] 104	[1.18] 30	[0.98] 25	[1.36] 34,5	M68X2	M10	
89E63	[4.13] 105	[0.79] 20	[1.06] 27	[0.75] 19	[3.03] 77			[1.57] 40	M80X2		G-1/4

Mounting Options

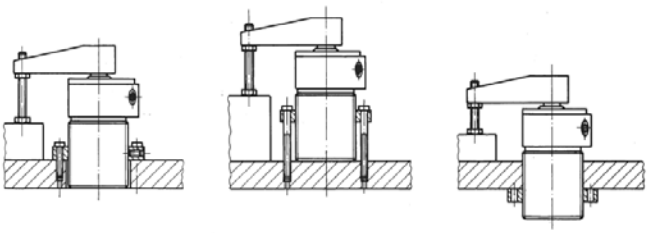

89E SERIES

Pneumatic Swing Clamps | Clamping Forces

Series 89E Clamping Force
(w/ standard clamping arm)

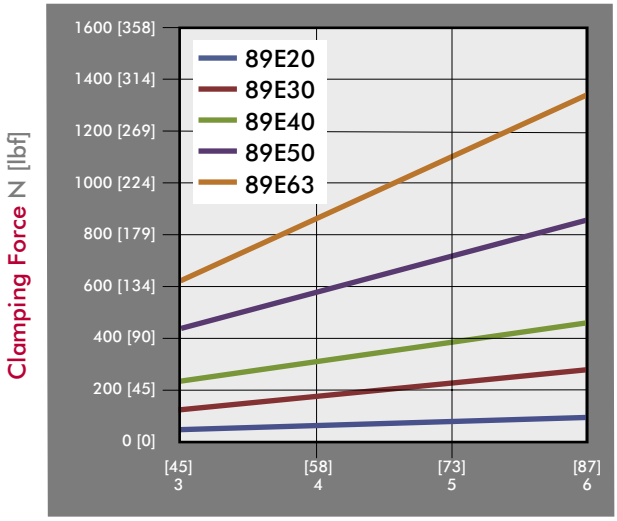

Guidelines

DESTACO Pneumatic Swing Clamps are designed for long life when using standard clamping arms and spindles. In the event that a longer arm or additional weight is needed, please consult these charts for the allowable weight and length.

Example: 89E32
At a weight of 80 gr, the maximum length of the arm is approximately 90mm.

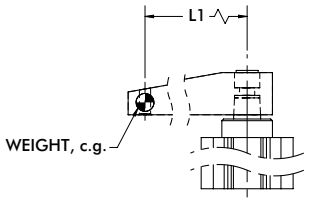

All data refers to an operating pressure of 5 bar [72psi] and an opening and closing time of 1 second.

89E20 & 89E32 Clamp Arm Weight

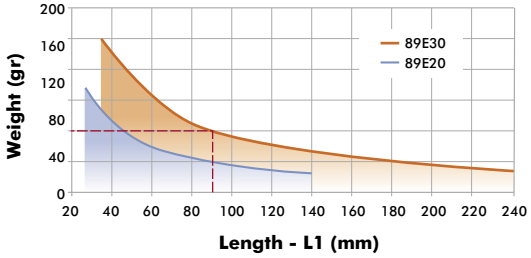

89E40 & 89E50 Clamp Arm Weight

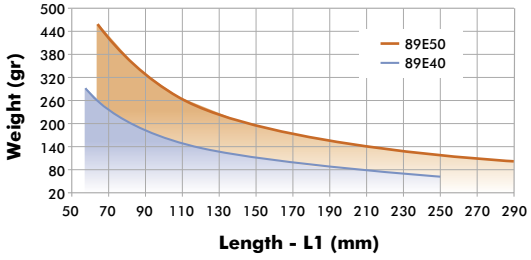

89E63 Clamp Arm Weight

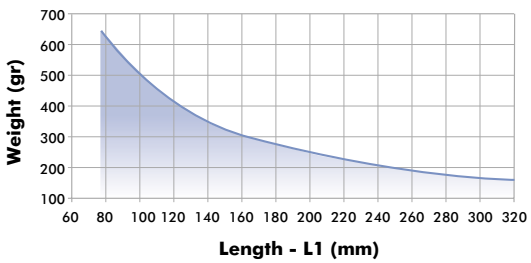

Pneumatic Swing Clamps | Clamping Arms

Features:

- Lightweight aluminum construction
- Locking tapered connection for 360 deg. arm positioning



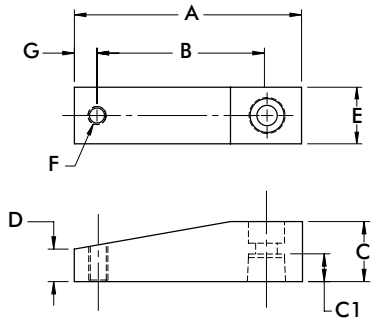

Part Number	Used with Model	A	B	C	C1	D	E	F	G	Weight [lbs] kg
8JG-215-1	89E20-010-2	[2.64] 67	[2.05] 52	[0.59] 15	[0.33] 8,5	[0.33] 8,5	[0.59] 15	M6	[0.28] 7	[0.08] 0,04
8JG-217-1	89E32-010-2	[3.15] 80	[2.36] 60	[0.79] 20	[0.37] 9,5		[0.79] 20	M8	[0.39] 10	[0.14] 0,06
8JG-218-1	89E40-010-2	[3.74] 95	[2.76] 70	[0.98] 25	[0.45] 11,5	[0.55] 14	[0.98] 25			[0.28] 0,13
8JG-219-1	89E50-025-2	[4.17] 106	[3.15] 80	[1.18] 30	[0.59] 15	[0.57] 14,5	[1.18] 30			[0.42] 0,19
8JG-220-1	89E63-008-2	[4.72] 120	[3.54] 90	[1.38] 35	[0.67] 17	[0.67] 17	[1.38] 35	M10	[0.47] 12	[0.66] 0,30

Clamping Arm Adapters

Features:

- For attaching custom made clamp arms
- 360° rotatable arm
- Aluminum construction

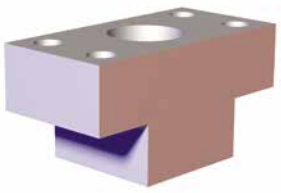

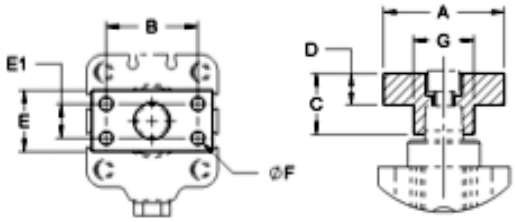

Part Number	Used with Model	A	B	C	D	E	E1	F	Weight [lbs] kg
8MA-084-1	89E20-010-2	[1.57] 40	[1.10] 28	[0.59] 15	[0.32] 8	[0.59] 15	--	[0.22] 5,5 (2x)	[0.03] 0,014
8MA-086-1	89E32-010-2	[1.97] 50	[1.38] 35	[0.79] 20	[0.43] 11	[0.79] 20	--		[0.08] 0,035
8MA-087-1	89E40-010-2		[1.50] 38	[0.98] 25	[0.51] 13	[0.98] 25	[0.55] 14	[0.22] 5,5 (4x)	[0.11] 0,050
8MA-088-1	89E50-025-2	[2.36] 60	[1.77] 45	[1.18] 30	[0.59] 15	[1.18] 30	[0.59] 15	[0.28] 7 (4x)	[0.19] 0,085
8MA-089-1	89E63-008-2	[2.56] 65	[1.89] 48	[1.38] 35	[0.67] 17	[1.38] 35	[0.71] 18	[0.35] 9 (4x)	[0.28] 0,125

89E SERIES

Pneumatic Swing Clamps | Mounting Flanges

Features:

- For use with Threaded Body Pneumatic Swing Clamps
- Variable height adjustment
- For recessed mounting

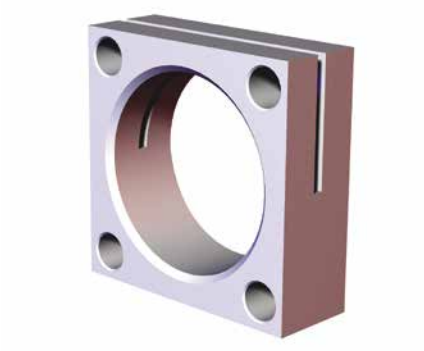

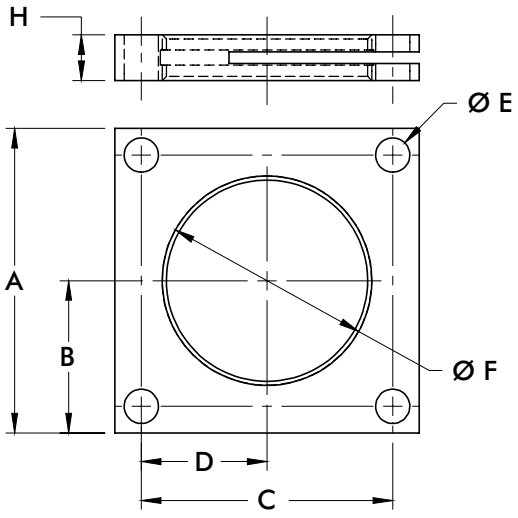

Part Number	Used with Model	A	B	C	D	E	F	H
8MA-219-1	89E20-010-2	[2.17] 55	[4.33] 27,5	[1.65] 42	[0.83] 21	[0.26] 6,6	M36X1,5	[0.31] 8
8MA-220-1	89E32-010-2	[2.76] 70	[1.38] 35	[2.13] 54	[1.06] 27	[0.35] 9	M42X1,5	[0.39] 10
8MA-221-1	89E40-010-2	[3.15] 80	[1.57] 40	[2.60] 66	[1.30] 33		M55X2	[0.47] 12
8MA-222-1	89E50-025-2	[3.54] 90	[1.77] 45	[2.99] 76	[1.50] 38		M68X2	[0.59] 15
8MA-223-1	89E63-008-2	[4.33] 110	[2.17] 55	[3.54] 90	[1.77] 45	[0.43] 11	M80X2	

8000, 8200, 8400 SERIES

Pneumatic Swing Clamps | Product Overview

Features:
- Threaded body may be mounted in a tapped hole or a clearance hole with optional mounting flange. 8215/8216 may be mounted with the upper flange.
- Sensor ready for use with round style sensors
- Clamp arm and spindle included

Applications:
- Assembly
- Welding
- Light machining

Also Available:
See page MC-PSC-31 for clamping arms
See page MC-PSC-31 for mounting flanges
See page MC-PSC-40 for sensing options

8015 Right-hand Swing
8016 Left-hand Swing



8415 Right-hand Swing
8416 Left-hand Swing



8215 Right-hand Swing
8216 Left-hand Swing

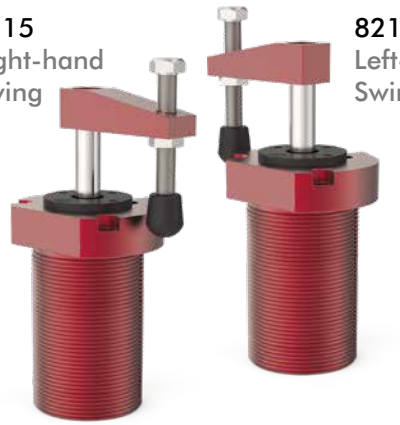

Technical Information

Model	Swing Direction	Total Stroke [in] mm	Stroke During Rotation [in] mm	Vertical Clamp Stroke [in] mm	Clamping Force [lbf.] N†	Bore Size [in] mm	Air Consumption‡ [ft³] dm³	Weight [lbs] kg	Replacement Seal Kit
8015	RH	[0.85] 21,5	[0.47] 11,8	[0.38] 9,7	[18] 80	[0.75] 19,1	[0.002] 0,06	[1.0] 0,45	801560
8016	LH								
8215	RH	[1.25] 31,8	[0.75] 19,1	[0.50] 12,7	[67] 300	[1.50] 38,1	[0.015] 0,41	[2.2] 1	821560
8216	LH								
8415	RH				[55] 245	[1.19] 30,2	[0.009] 0,25	[1.5] 0,68	841560
8416	LH								

†with standard clamping arm at 5 bar [72psi]. ‡per double stroke at 5 bar [72psi]

Operating Pressure Range: 3 bar [45 psig] to 9 bar [130 psig]
Maximum Operating Temperature: 60°C [140°F]

Note:
To order without clamping arm add –**LA** to the end of the model. Ex. 8215-**LA**



8000, 8200, 8400 SERIES

Pneumatic Swing Clamps | Dimensions



Unclamped



Clamped

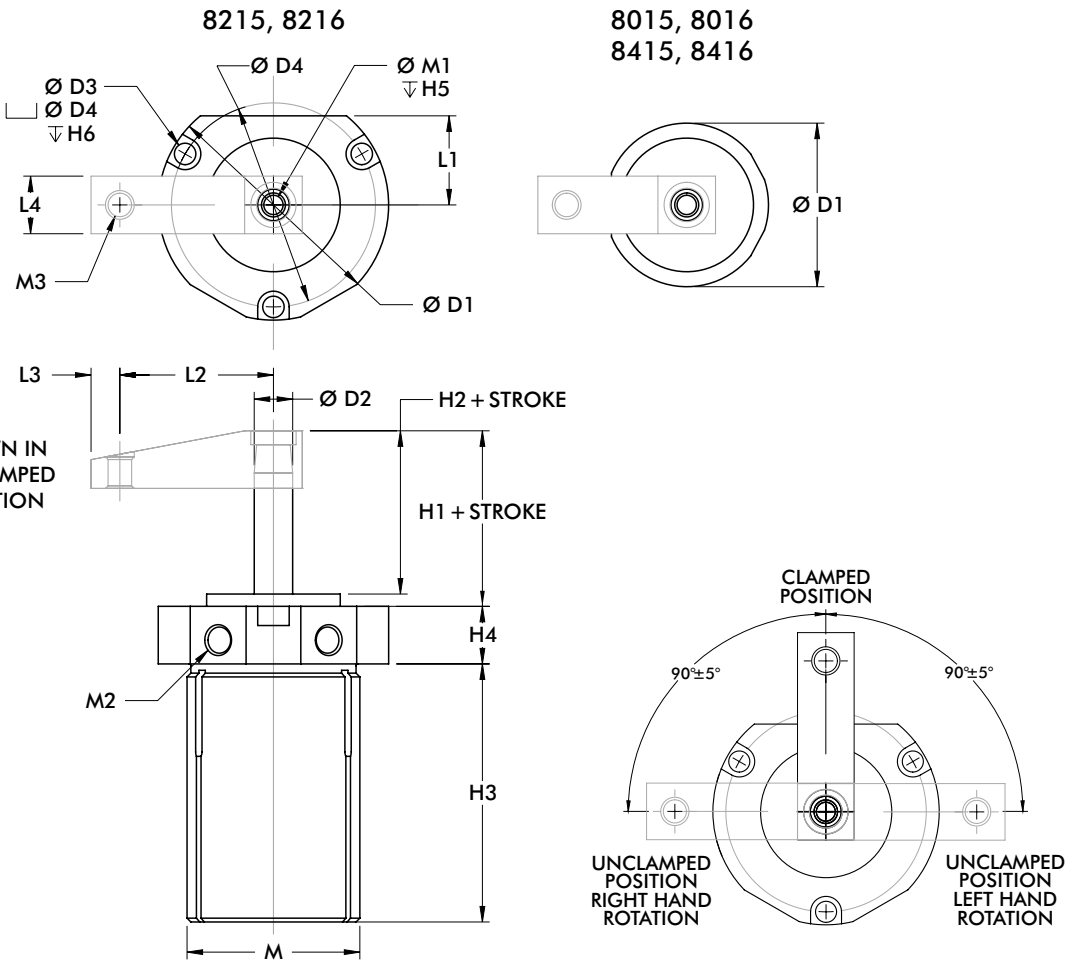

Model	ØD1	ØD2	ØD3	ØD4	Stroke	H1	H2	H3	H4	H5	H6	L1
8015 8016	[1.25] 31,8	[0.44] 11,1	--	--	[0.85] 21,5	[0.53] 13,5	[0.41] 10,4	[2.87] 72,9	[0.50] 12,7	[0.75] 19,1	--	--
8215 8216	[3.00] 76,2	[0.50] 12,7	[0.28] 7,1	[2.66] 67,6	[1.25] 31,8	[0.97] 24,6	[0.81] 20,6	[3.36] 85,3	[0.75] 19,1	[0.67] 17	[0.25] 6,4	[1.16] 29,5
8415 8416	[2.13] 54,1		--	--		[0.94] 23,9	[0.78] 19,8	[3.17] 80,5			--	--

Model	L2	L3	L4	M	M1	M2	M3
8015 8016	[1.12] 28,4	[0.31] 7,9	[0.62] 15,7	1-1/8-16	¼-20	#10-32	#10-32
8215 8216	[2.00] 50,8	[0.38] 9,6	[0.75] 19,1	2-1/4-12	5/16-18	1/8 NPT	3/8-16
8415 8416	[1.56] 39,6			1-3/4-12			

Mounting Options

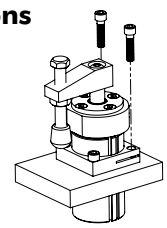

8000, 8200, 8400
Mounted into a tapped hole or a through a clearance hole with the optional mounting flange. Jam nuts are available for 8000.

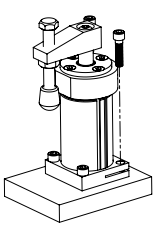

8200 only
Mounted through a clearance hole using mounting screws in the top flange.

Series 8000, 8200, 8400 Clamping Force
(w/ standard clamping arm)

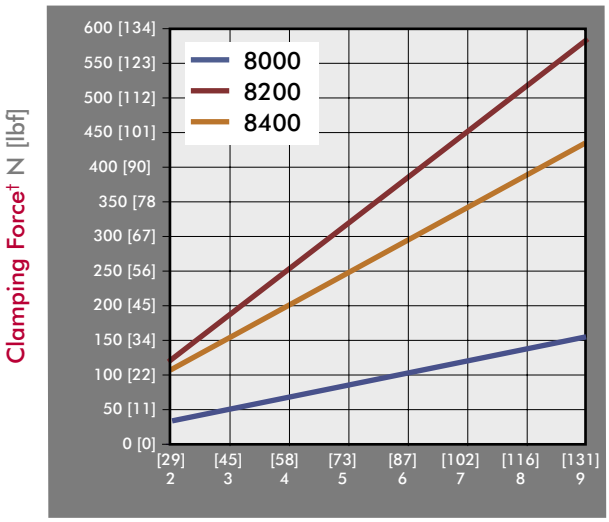

Guidelines

DESTACO Pneumatic Swing Clamps are designed for long life when using standard clamping arms and spindles. In the event that a longer arm or additional weight is needed, please consult these charts for the allowable weight and length.

Example: 8215
At a weight of 80 gr, the maximum length of the arm is approximately 90mm.

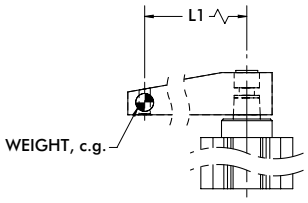

All data refers to an operating pressure of 5 bar [72psi] and an opening and closing time of 1 second.

8015/8016 Clamp Arm Weight

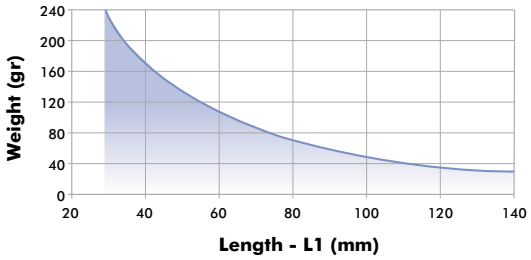

8215/8216 Clamp Arm Weight

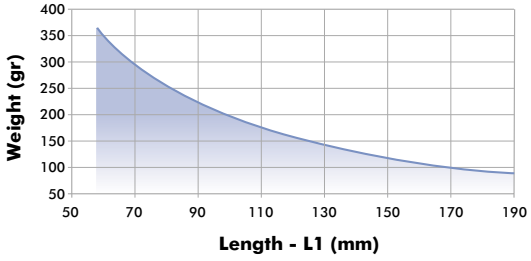

8415/8416 Clamp Arm Weight

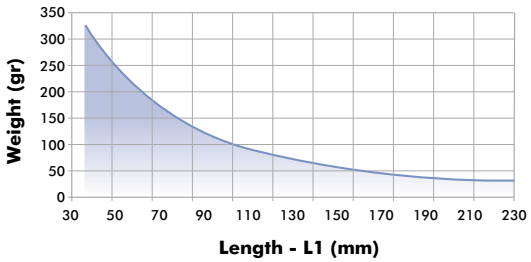

8000, 8200, 8400 SERIES

Pneumatic Swing Clamps | Clamping Arms

Features:

- Lightweight aluminum construction
- Locking tapered connection for 360 deg. arm positioning



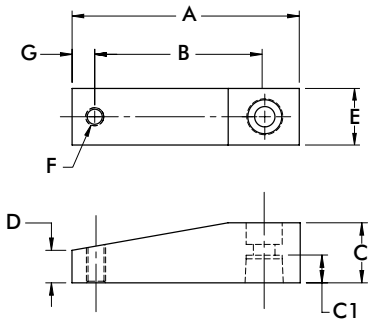

Part Number	Used with Model	A	B	C	C1	D	E	F	G	Weight [lbs] kg
801528	8015, 8016	[1.74] 44,2	[1.11] 28,2	[0.37] 9,4	[0.33] 8,3	[0.25] 6,4	[0.62] 15,7	#10-32	[0.32] 8,1	[0.03] 0,01
801529		[2.87] 72,9	[2.24] 56,9							
821512	8215, 8216, 8415, 8416	[2.75] 69,9	[2.00] 50,8	[0.75] 19,1	[0.57] 14,5	[0.38] 9,5	[0.75] 19,1	3/8-16	[0.38] 9,5	[0.04] 0,02
821513		[3.75] 95,3	[3.00] 76,2							

Clamping Arm Adapters

Features:

- For attaching custom made clamp arms
- 360° rotatable arm
- Aluminum construction

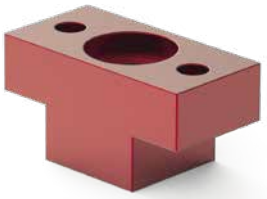

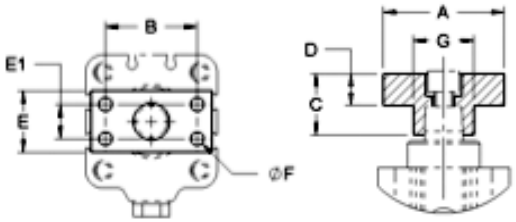

Part Number	Used with Model	A	B	C	D	E	E1	F	Weight [lbs] kg
801532	8015, 8016	[1.37] 34,8	[1.00] 25,4	[0.39]	[0.25]	[0.62]	--	#10-32 (2x)	[0.03] 0,014
821556	8215, 8216	[1.50] 38,1	[1.06] 26,9	[0.75]	[0.37]	[0.75]	--	1/4-20 (2x)	[0.05] 0,020

Mounting Flanges

Features:

- For use with Threaded Body Pneumatic Swing Clamps
- Variable height adjustment
- For recessed mounting

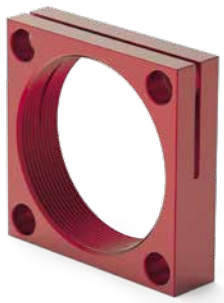

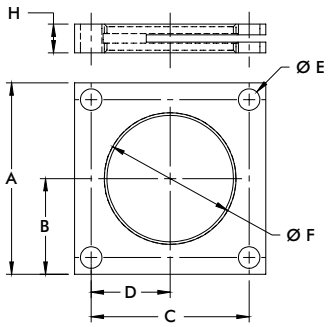

Part Number	Used with Model	A	B	C	D	E	F	H
801553	8015, 8016	[1.38] 35	[0.69] 17,5	[1.08] 27,4	[0.54] 13,7	[0.20] 5,1	1 1/8-16	[0.50] 12,7
821553	8215, 8216	[2.50] 63,5	[1.25] 31,8	[2.12] 53,8	[1.06] 26,9	[0.28] 7,1	2 1/4-12	
841550	8415, 8416	[2.00] 50,8	[1.00] 25,4	[1.60] 40,6	[0.80] 20,3		1 3/4-12	

035 SERIES

Pneumatic Swing Clamps | Product Overview

Features:
- Available with threaded body, or lower flange mounting
- Low profile for confined spaces
- Double locked arm attachment is bolted to piston rod and clamped around shaft diameter

Applications:
- Assembly
- Welding
- Light machining

Also Available:
See page MC-PSC-35 for clamping arms
See page MC-PSC-36 for jam nuts

Series 035-1



Threaded body design for mounting through fixture plates.

Series 035-2



Flanged body design for quick and easy mounting

Technical Information

Model	Swing Direction	Total Stroke [in] mm **S**	Stroke During Rotation [in] mm **S1**	Vertical Clamp Stroke [in] mm **S2**	Clamping Force [lbf.] N†	Bore Size [in] mm	Air Consumption‡ [ft³] dm³	Weight [lbs] kg	Replacement Seal Kit
035-125-190	RH	[1.04] 26,3	[0.51] 12,8	[0.53] 13,5	[20] 89	[0.98] 25	[0.005] 0,13	[0.56] 0,25	905516
035-125-290	LH								
035-132-190	RH	[1.13] 28,8	[0.56] 14,3	[0.57] 14,5	[30] 133	[1.26] 32	[0.008] 0,24	[0.94] 0,43	905517
035-132-290	LH								
035-140-190	RH	[1.20] 30,4	[0.57] 14,4	[0.63] 16	[60] 267	[1.57] 40	[0.015] 0,41	[1.31] 0,59	905518
035-140-290	LH								
035-150-190	RH	[1.18] 30	[0.63] 16	[0.55] 14	[69] 307	[1.97] 50	[0.023] 0,64	[1.81] 0,82	905519
035-150-290	LH								
035-225-190	RH	[1.05] 26,7	[0.54] 13,7	[0.51] 13	[20] 89	[0.98] 25	[0.005] 0,13	[0.56] 0,25	905516
035-225-290	LH								
035-232-190	RH	[1.06] 26,8	[0.57] 14,4	[0.49] 12,4	[30] 133	[1.26] 32	[0.008] 0,24	[1.13] 0,51	905517
035-232-290	LH								
035-240-190	RH	[1.09] 27,7	[0.57] 14,4	[0.52] 13,3	[60] 267	[1.57] 40	[0.015] 0,41	[1.40] 0,64	905518
035-240-290	LH								
035-250-190	RH	[1.13] 28,8	[0.63] 16	[0.51] 12,8	[69] 307	[1.97] 50	[0.023] 0,64	[1.90] 0,86	905519
035-250-290	LH								

†with standard clamping arm at 5 bar [72psi]. ‡per double stroke at 5 bar [72psi]

Operating Pressure Range: 3 bar [45 psig] to 7 bar [100 psig]
Maximum Operating Temperature: 80°C [176°F]

035 SERIES

Pneumatic Swing Clamps | Dimensions



Series 035-1

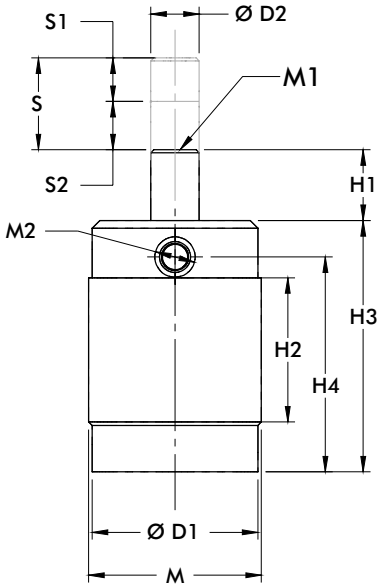

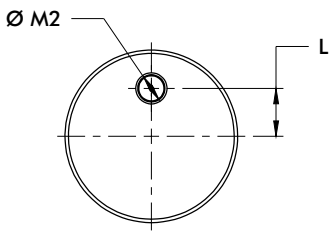



Series 035-2

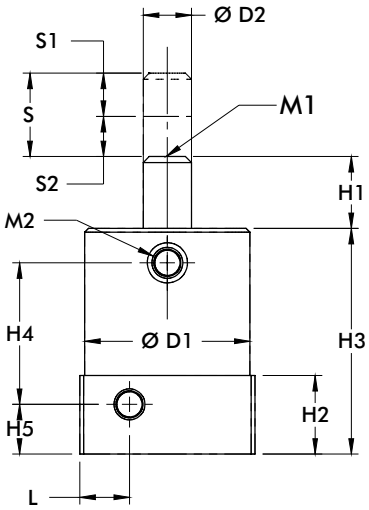

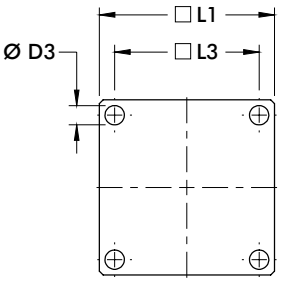

mm [INCH]

THIRD ANGLE PROJECTION

Mounting Options

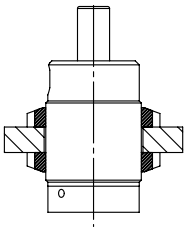

035-1
Threaded body mounts through a clearance hole and locked in place using two optional jam nuts

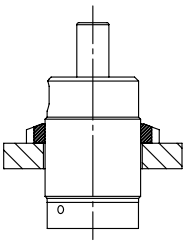

035-1
Threaded body mounts into a threaded hole and is locked in place using one optional jam nuts

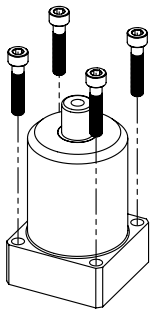

035-2
Mount using four mounting holes in the base flange

Model	ØD1	ØD2	D3	H1	H2	H3	H4	H5	L	L1	L3	M	M1	M2
035-125-( )	[1.42] 36	[.55] 14	--	[0.57] 14,4	[1.50] 38,1	[2.76] 70	[2.25] 57,2	--	[0.35] 9	--	--	1-½ -16	1/4-20	#10-32
035-132-( )	[1.79] 45,4	[0.63] 16	--	[0.75] 19,1	[1.72] 43,7	[3.87] 98,2	[2.63] 66,7	--	[0.45] 11,4	--	--	1-7/8-16	5/16-18	1/8 NPT
035-140-( )	[2.16] 54,8		--	[0.76] 19,4	[1.88] 47,7	[3.28] 83,2	[2.80] 71	--	[0.70] 17,8	--	--	2-1/4-16		
035-150-( )	[2.36] 60	[0.79] 20	--	[0.70] 17,8	[2.00] 50,8	[3.48] 88,3	[2.95] 75	--	[0.50] 12,7	--	--	2-1/2-16	3/8-16	
035-225-( )	[1.38] 35	[.55] 14	[.18] 4,5	[0.60] 15,2	[.91] 23	[2.62] 66,5	[1.60] 40,6	[0.50] 12,7	[0.57] 14,5	[1.57] 40	[1.22] 31	--	1/4-20	#10-32
035-232-( )	[1.97] 50	[0.63] 16	[.26] 6,5	[0.85] 21,6		[2.79] 71	[1.76] 44,6	[0.57] 114,5	[0.65] 16,5	[2.13] 54	[1.73] 44	--	5/16-18	1/8 NPT
035-240-( )	[2.16] 54,8			[0.94] 23,9	[1.03] 26,1	[2.95] 75	[1.85] 47	[0.65] 16,5	[0.65] 16,5	[2.29] 58,2	[1.89] 48	--		
035-250-( )	[2.36] 60	[0.79] 20	[.33] 8,5	[0.78] 19,7	[1.03] 26	[3.15] 80	[2.05] 52			[2.68] 68	[2.17] 55	--	3/8-16	

Dimensions and technical information are subject to change without notice

Series 035 Clamping Force
(w/ standard clamping arm)

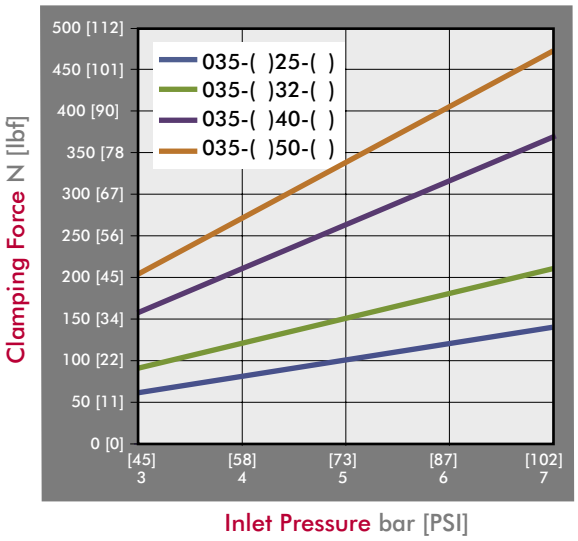

Guidelines

DESTACO Pneumatic Swing Clamps are designed for long life when using standard clamping arms and spindles. In the event that a longer arm or additional weight is needed, please consult these charts for the allowable weight and length.

Example: 035-132-190
At a weight of 80 gr, the maximum length of the arm is approximately 90mm.

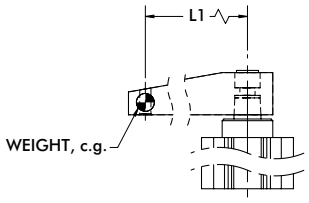

All data refers to an operating pressure of 5 bar [72psi] and an opening and closing time of 1 second.

25mm, 32mm Clamp Arm Weight

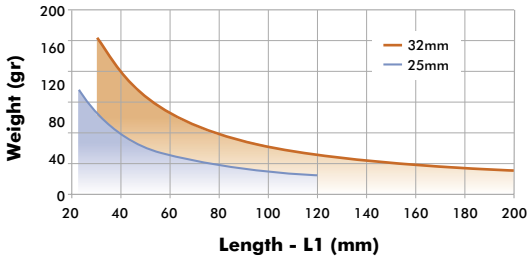

40mm, 50mm Clamp Arm Weight

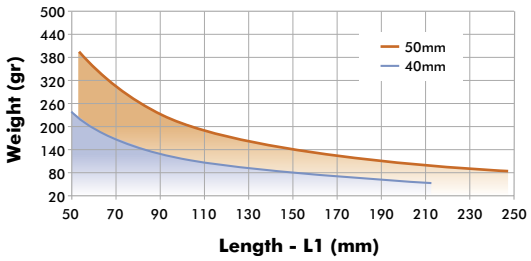

035 SERIES

Pneumatic Swing Clamps | Clamping Arms

Features:

- For standard use
- Aluminum construction
- Clamp on style connection for 360 deg. arm positioning



036-XXX-02

036-XXX-01

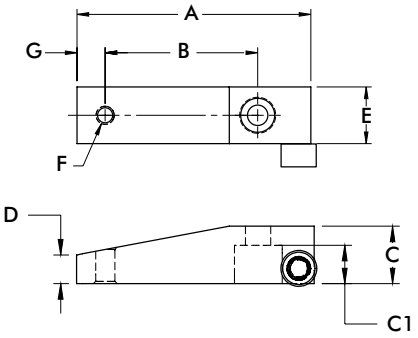

Part Number	Used with Model/series	A	B	C	C1	D	E	F	G	Weight [lbs] kg
036-551-01	035-12.... 035-22....	[2.38] 60,5	[1.36] 34,5	[0.63] 15,9	[0.40] 10,2	[0.31] 8	[0.75] 19,1	1/4-20	[0.32] 8	[0.10] 0,05
036-551-02		[3.38] 85,9	[2.36] 60							[0.13] 0,06
036-630-01	035-13.... 035-23.... 035-14.... 035-24....	[3.10] 78,7	[2.00] 50,8	[0.75] 19,1	[0.50] 12,7	[0.38] 9,5	[0.75] 19,1	5/16-18	[0.38] 9,5	[0.15] 0,07
036-630-02		[4.73] 120	[3.63] 92,1							[0.21] 0,10
036-787-01	035-15.... 035-25....	[4.00] 101,6	[2.75] 69,9	[1.00] 25,4	[0.70] 17,8	[0.50] 12,7	[1.00] 25,4	3/8-16	[0.38] 9,5	[0.33] 0,15
036-787-02		[6.36] 161,5	[5.00] 127							[0.49] 0,22

Dimensions and technical information are subject to change without notice

Features:

- For use with Threaded Body Pneumatic Swing Clamps
- Variable height adjustment
- For recessed mounting
- Steel construction



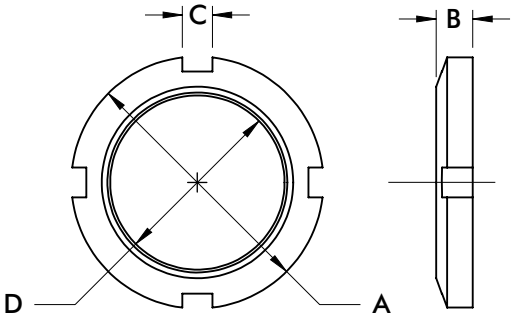

Part Number	Used with Model/ series	A	B	C	D	Weight [lbs] kg
051-150-160	035-125-190, 035-125-290	[2.00] 50,8	[0.38] 9,7	[0.275] 7	1 1/2-16 UN	[0.13] 0,06
051-187-160	035-132-190, 035-132-290	[2.63] 66,7		[0.312] 7,9		[0.25] 0,11
051-225-160	035-140-190, 035-140-290	[3.00] 76,2	[0.50] 12,7		2 1/4-16 UN	[0.40] 0,18
051-250-160	035-150-190, 035-150-290	[3.25] 82,6				[0.44] 0,20

8700 SERIES

Pneumatic Lever Clamps | Product Overview

Features:
- Alternative solution to swing clamps when space is limited
- The clamping lever may be positioned left, forward, or right (relative to ports) within the same clamp body
- Threaded body with upper flange mount
- Non-toggle locking linkage
- Clamping arm and spindle included

Applications:
- Assembly & welding fixtures
- Light machining

Also Available:
See page MC-PSC-39 for jam nuts

8725



8732
8732G



8740
8740G



8750
8750G



Technical Information

Model	Vertical Clamping Stroke* [in.] mm	Clamping Force† [lbf.] N	Bore Size [in.] mm	Air Consumption‡ [in.³] cm³	Weight [lb.] kg	Seal Kit
8725	[0.10] 2,5	[43] 195	[0.98] 25	[0.004] 0,11	[1.3] 0,6	872500
8732	[0.12] 3,2	[64] 285	[1.26] 32	[0.008] 0,23	[2.2] 1	873200
8732G						
8740		[106] 470	[1.57] 40	[0.014] 0,41	[2.6] 1,2	874000
8740G						
8750	[0.15] 3,8	[167] 745	[1.97] 50	[0.023] 0,64	[4,4] 2	875000
8750G						

* Equal to approx. 6° above horizontal with standard clamping arm. † at 5 bar [72psi].
‡ per double stroke at 5 bar [72psi].

Operating Pressure Range:
3 bar [45 psig] to 7 bar [100 psig]
Max. Operating Temperature:
-10°C to 80°C [14°F to 175°F]

Application Note:
If using clamping arms other than standard, the length must not exceed 1.5X the overall length of the standard arm.

The inlet air flow rate should be adjusted to position the arm in no less than 1/2 second for standard arms and no less than 1 second in the case of an extended arm.

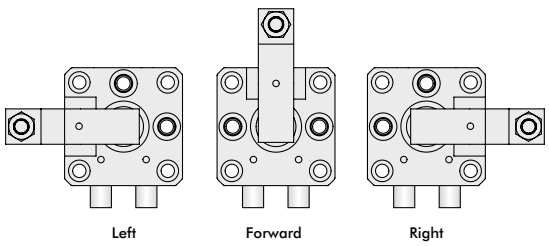

Levers can be positioned in one of three positions in relation to the air ports.

Dimensions and technical information are subject to change without notice

Pneumatic Lever Clamps | Dimensions, Clamping Forces

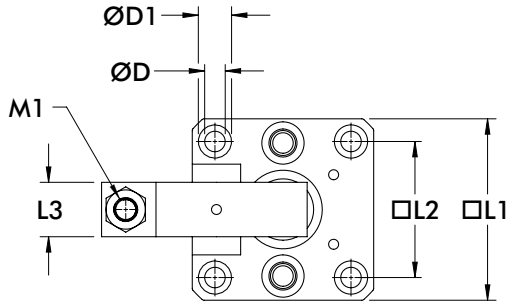

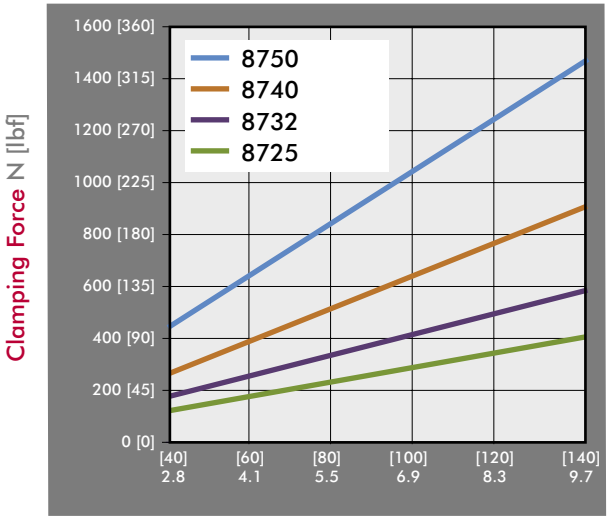

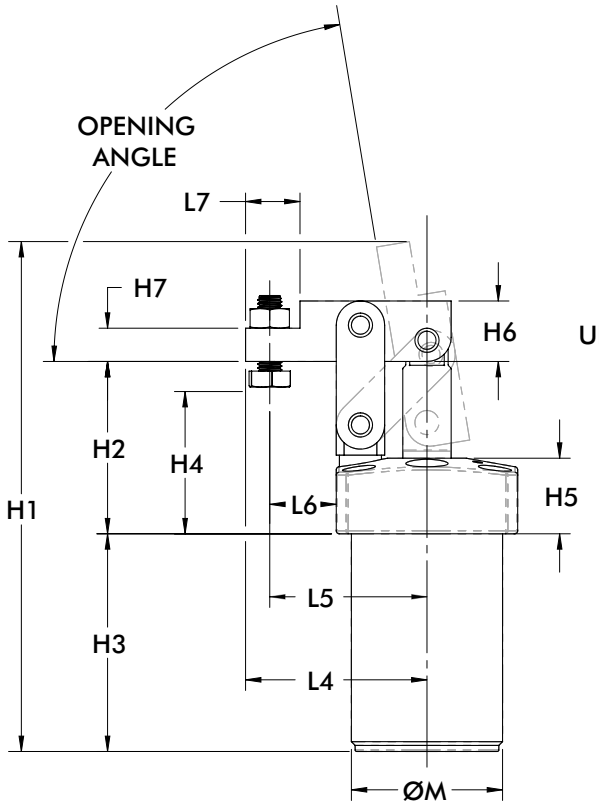

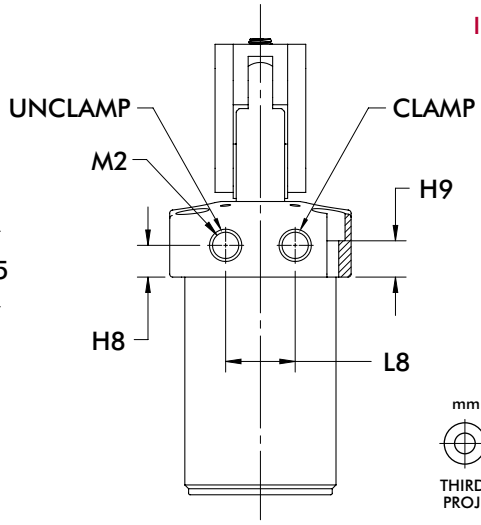

mm [INCH]

THIRD ANGLE PROJECTION



Model	Opening Angle	ØD	ØD1	H1	H2	H3	H4 (min/max)	H5	H6	H7	H8	H9
8725	80°	[0.22] 5,5	[0.35] 9	[5.67] 144	[1.97] 50	[2.42] 61,5	[0.59-0.98] 15-25	[0.98] 25	[0.67] 17	[0.39] 10	[0.47] 12	[0.59] 15
8732/ 8732G	81°	[0.27] 6,8	[0.43] 11	[6.65] 169	[2.25] 57	[2.83] 72	[0.63-1.18] 16-30		[0.79] 20	[0.43] 11	[0.41] 10,5	[0.51] 13
8740/ 8740G	82°			[6.93] 176	[2.40] 61	[2.85] 72.5	[0.75-1.14] 19-29		[0.98] 25	[0.55] 14		
8750/ 8750G	75°	[0.33] 8,5	[0.55] 14	[7.87] 200	[2.60] 66	[3.11] 79	[0.86-1.30] 22-33		[1.18] 30	[0.59] 15		[0.43] 11

Model	L1	L2	L3	L4	L5	L6	L7	L8	ØM	M1	M2
8725	[1.97] 50	[1.46] 37	[0.63] 16	[1.89] 48	[1.61] 41	[0.63] 16	[0.55] 14	[0.91] 23	M40 x 1.50	M6 x 1.0	M5 x 0.8
8732 8732G	[2.36] 60	[1.77] 45	[0.71] 18	[2.36] 60	[2.05] 52	[0.87] 22	[0.71] 18		M50 x 1.50	M8 x 1.25	[1/8NPT] G-1/8
8740 8740G	[2.65] 65	[1.97] 50	[0.79] 20	[2.60] 66	[2.20] 56	[0.93] 23,5	[0.79] 20	[1.02] 26	M55 x 1.50		[1/8NPT] G-1/8
8750 8750G	[2.95] 75	[2.28] 57	[0.87] 22	[3.05] 77,5	[2.50] 63,5	[1.02] 26	[1.10] 28	[1.26] 32	M65 x 1.50	M12 x 1.75	[1/8NPT] G-1/8

8700 SERIES

Pneumatic Lever Clamps | Jam Nuts

Features:

- For use with 8700 Series Pneumatic Lever Clamps
- Variable height adjustment
- For recessed mounting



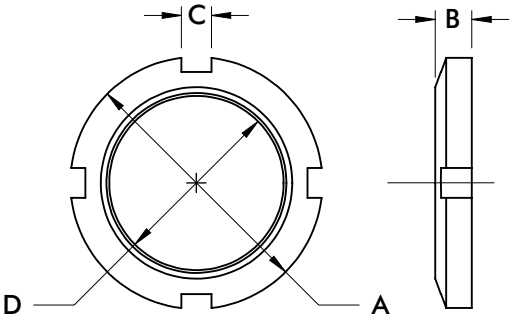

Mounting from above using 4 socket cap screws through the flange.

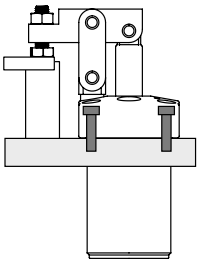

Mounting by screwingbody into a tapped hole and locking with one jam nut.

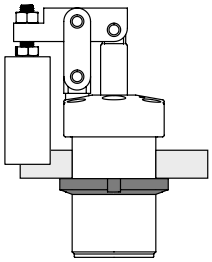

Mounting by inserting body into a plain hole and locking with two jam nuts.

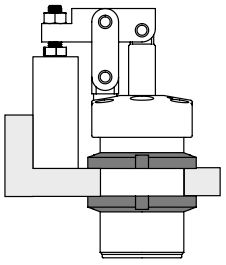

Part Number	Used with Model	A	B	C	D	Weight [lbs] kg
872550	8725	[2.28] 58	[0.35] 9	[0.28] 7	M40 x 1.50	[0.13] 0.06
873250	8732	[2.76] 70	[0.43] 11		M50 x 1.50	[0.35] 0.16
874050	8740	[2.95] 75		[0.31] 8	M55 x 1.50	[0.37] 0.17
875050	8750	[3.35] 85	[0.47] 12		M65 x 1.50	[0.33] 0.15

PNEUMATIC SWING CLAMPS ACCESSORIES

Features:

- Sensors are activated by a magnetic ring installed on the cylinder piston
- All sensors feature an LED for easy set-up
- IP67 rated
- Temperature Range: -10°C to 60°C [14°F to 140°F]

810169,
810173,
810174



8EA-109-1,
8EA-120-1,
810170,
810171



810151,
810153,
810155,
810157



Tie rod clip 810151-1 included.

810156,
810158



810153



Technical Information

Item Number	Mount Style	Connector	Length	Function	Voltage	Max. Switching Current	Voltage Drop
810169	Round	M8 male quick connect	165mm [6.5in.]	Reed	5-120V AC/DC	50mA	3.0V
810173				PNP	4.5-28V DC	100mA	0.5V
810174				NPN	4.5-28V DC	100mA	0.5V
8EA-109-1	T-slot	M8 male quick connect	300mm [11.8in.]	Reed	10-30V DC	100mA	3.0V
8EA-120-1		M12 male quick connect	300mm [11.8in.]	Reed	15-30 V AC/DC	500mA	1.5V
810170		M8 male quick connect	165mm [6.5in.]	PNP	10-30V DC	100mA	2.0V
810171				NPN	10-30V DC	100mA	2.0V
810151	Tie Rod	No connector cord	2.7m [9ft.]	Reed	5-120V AC/DC	500mA	3.5V
810153				Reed	24-240V AC	4A	1.0V
810155				PNP	6-24V DC	500mA	1.0V
810157				NPN	6-24V DC	500mA	1.0V
810156	Band Clamp			Reed	5-120V AC/DC	500mA	3.5V
810158				PNP	6-24V DC	500mA	1.0V

PNEUMATIC SWING CLAMPS ACCESSORIES

Pneumatic Swing Clamps | Extension Cordsets

Features:

- For use with M8 quick connect sensors
- Threaded coupling nuts provide IP67 protection
- Robotic grade, oil and abrasion resistant polyurethane (PUR) cable



Item Number	Length	Rating	Temperature Rating
CABL-010	2 Meter [78in.]	120V AC/DC, 3A max.	-20°C to 80°C [-40°F to 176°F]
CABL-013	5 Meter [16.4ft.]		

Wiring Schematics

810169

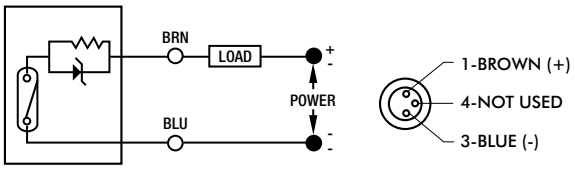

810170, 810173

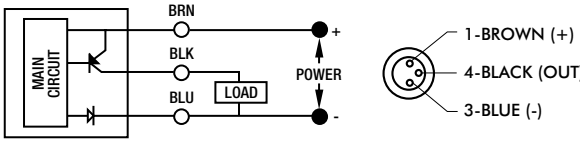

810171, 810174

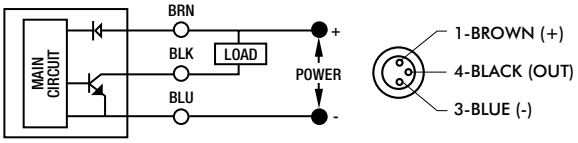

8EA-109-1, 8EA-120-1

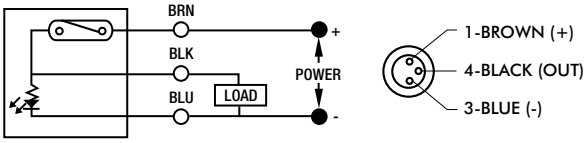

810153

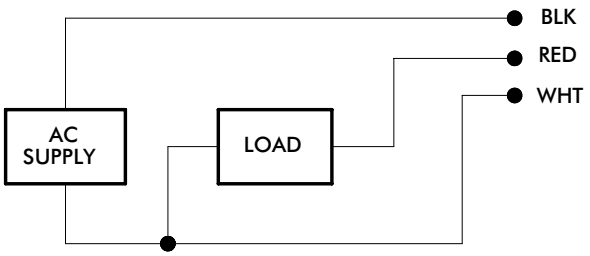

810151, 810156

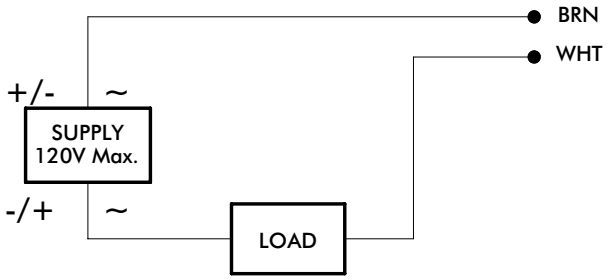

810155, 810158

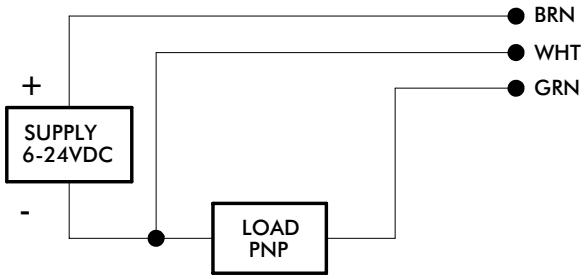

810157, 810158

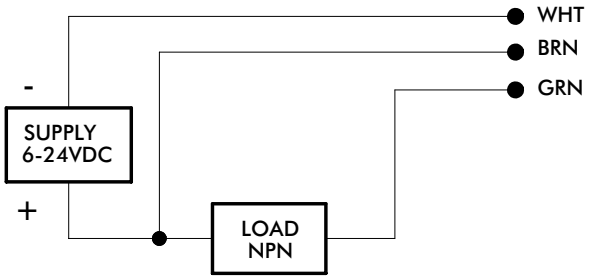

Dimensions and technical information are subject to change without notice

6004-SW SERIES

Manual Swing Clamps | Product Overview and Dimensions

Features:
- Left or right swing motion available
- 90° Swing clamp arm motion
- Higher clamping force than pneumatic version
- Though-hole mounting
- Clamp arm can be radially positioned 360°
- Handle can be radially positioned up to 180°

Applications:
- Assembly
- Checking fixtures
- Welding fixtures
- Tensioning devices

6004-SWL
Clamp Arm
Swing Left

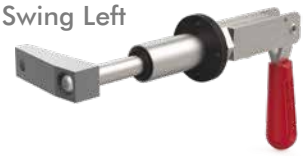

6004-SWR
Clamp Arm
Swing Right



Shown in open (un-clamp) position.

Color Handles
Available on models in this series. Add **-Y**, **-G**, **-B**, **-K** to end of model number.



Technical Information | Holding Capacities | Dimensions

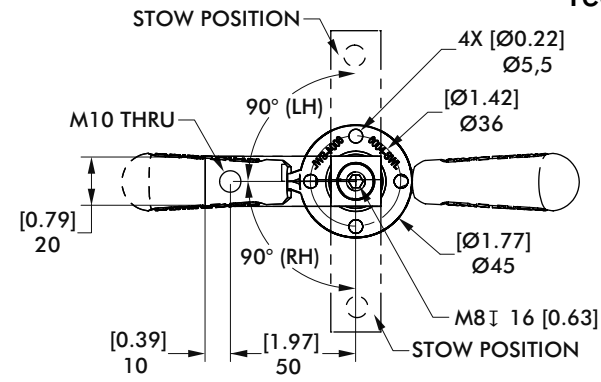

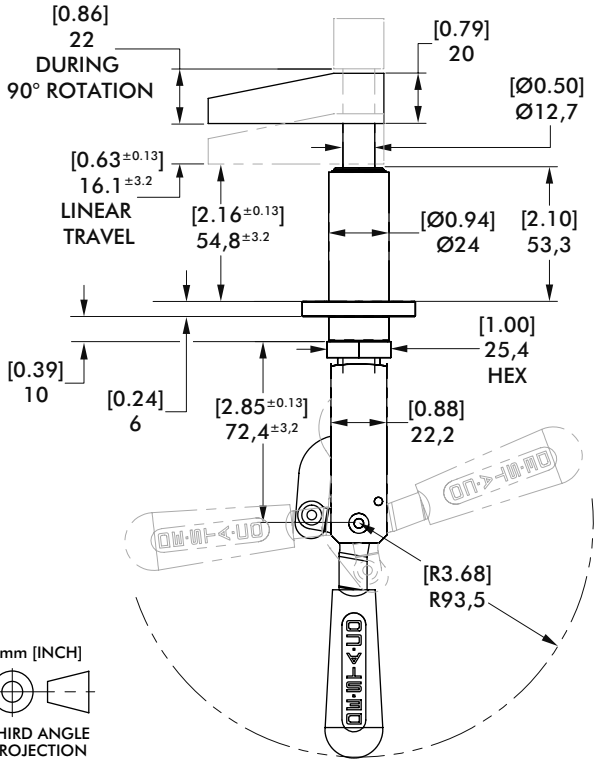

Model	Swing Direction	Total Stroke [in] mm	Stroke During Rotation [in] mm	Stroke Straight Pull [in] mm	Weight [lb] Kg
6004-SWL	LH	[1.50] 38	[0.87] 22	[0.63] 16	[1.32] 0,6
6004-SWR	RH				

Applied Force (on handle) [lbs] N	[40] 178	[30] 133	[20] 89	[10] 44
Plunger Pull Force (straight pull)	[576] 2562	[432] 1922	[288] 1281	[144] 641
Clamp Force (with arm shown below)	[323] 1437	[269] 1197	[189] 841	[108] 480

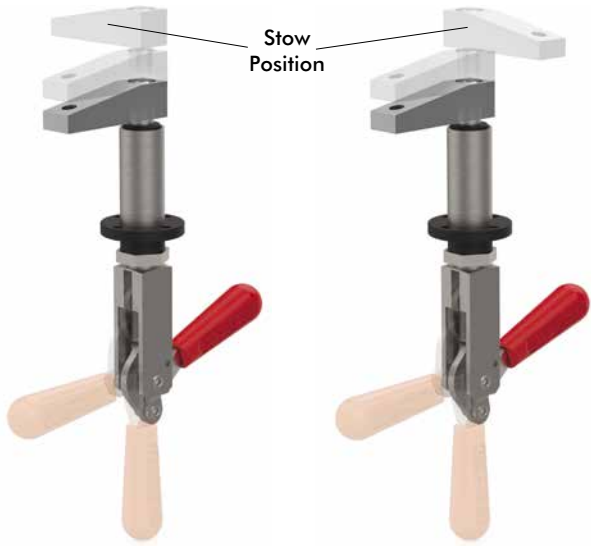

6004-SWL 6004-SWR

PNEUMATIC POWER CYLINDERS

Features

Your requirements

Power element of machines, tools and devices for the following applications:

- Clamping
- Punching
- Stamping
- Notching
- Coining
- Riveting
- Pressing
- Clinching

The solution

DESTACO´s double acting power cylinder, which is based on the wedge lever principle.

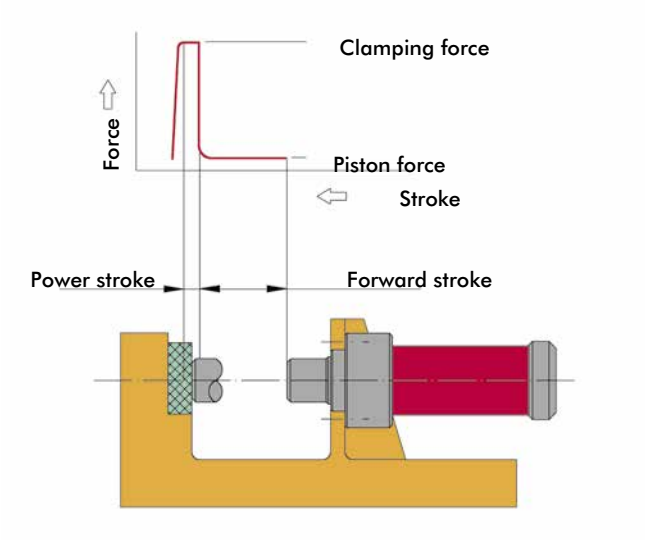

Product features

- Mechanical advantage: 10:1
- Characteristic are the two steps of stroke: the forward stroke to move a certain distance and the power stroke with an amplified force on a short distance
- Exact positioning of cylinder by flange mount on cylinder's head
- Cylinder works in any position
- High durability because of solid and maintenance free wedge lever mechanics.
- End position control by magnetic field sensing

Technical Data	
Power forces at 6 bar	4 – 60 kN
Forward strokes	15 – 200 mm
Power strokes	6 and 7 mm*
Air pressure	max. 6 bar, min 3 bar
Mechanical advantage	max. 10:1
Cylinders require clean, water- and oil free air	

*power strokes up to max. 12 mm upon request

Round design: Type K and WK

- Piston rod with male thread (Type K) or ISO fit (Type WK)



Rectangular design: Type WR

- Two piston rods prevent twisting



Application Recommendations

- Compressed air should be treated by filter, water separator and pressure regulator. Oiler is not allowed!
- For an adequate piston speed air hoses with 6mm I.D. should be used.
- Do not increase the max. air pressure of 6 bar, because this would reduce the cylinder´s life cycle considerably.
- The piston rods of type K and WK are not secured against twisting, an external device should be provided.
- Piston rod should not be subjected to transversal forces. Force should always be exerted by coaxial force through the piston rod to the work piece.
- For Type WR, force must be transmitted via the centre of the pressure plate.
- Connection between rod and tool should be performed as frictional connection (coupling), not as form fitting connection.
- For punching operations we recommend a force reserve of approx. 30 %.
- If the cylinder is used for positioning in the extended rod position you should consider that a possible counter-force will cause an axial deflection of approx. 1 mm. This feature is due to the cylinder's design because after the nominal power stroke the clamping force drops down to the level of the piston force (see force-stroke diagram left side).
- Valves are not usable to avoid piston movement. If the piston should be positioned within the range of the forward stroke, both chambers of the cylinder have to be vented. If the cylinder should stay at a retracted position the piston rod chamber should be under pressure and the piston chamber should be vented.
- For further facts and additional applications features see operating instruction MAPnkz-2.

Dimensions and technical information are subject to change without notice

PNEUMATIC POWER CYLINDERS

Functions

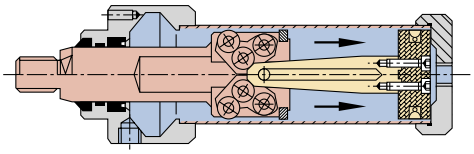

Basic position

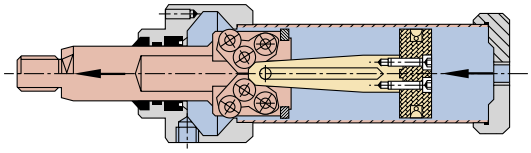

Forward stroke
Piston force is identical to the force of a common pneumatic cylinder with adequate piston diameter

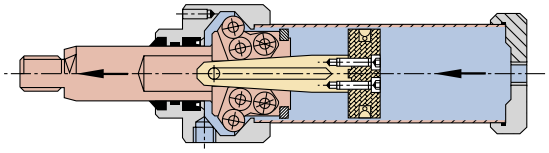

Power stroke
Beginning of mechanical force amplification.
Mechanical advantage max. 10:1

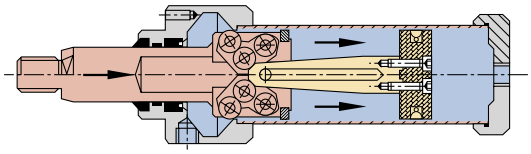

Return stroke
The return stroke can be initiated in any position of piston. The force during return stroke is approx. half of piston force.

Forces

Force within forward stroke

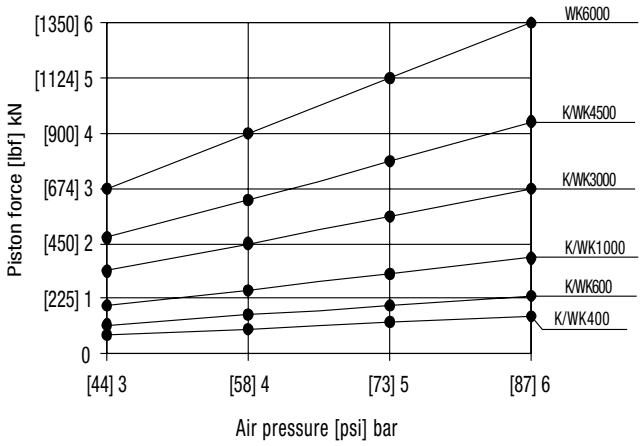

Clamping force within power stroke

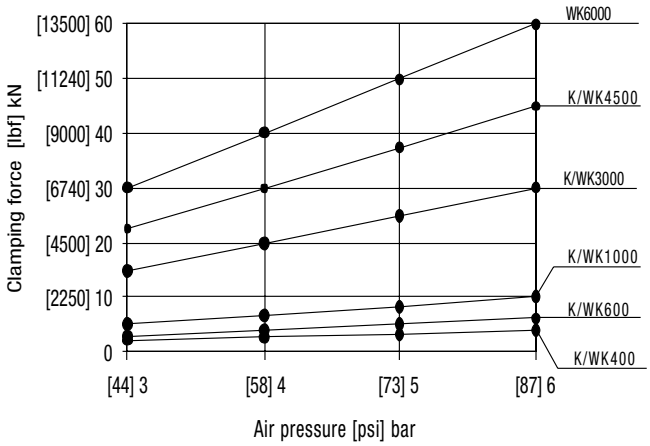

Return stroke force: half of piston force

TYPE K SERIES

Pneumatic Power Cylinders | Product Overview | Technical Information



- **Piston rod with male thread**

Note:
Operating pressure max. 6 bar [87psi], min 3 bar [44psi]. Use only clean, water- and oilfree compressed air. Piston rod is not secured against twisting and should not be loaded transversal.
See page MC-PPC-2 for more information.

Model	Piston force within forward stroke at 6 bar kN [lbf]	Forward stroke mm [in]	Clamping force within power stroke at 6 bar kN [lbf]	Power stroke mm [in]	Piston dia. mm [in]	Air consumption per double stroke at 6 bar dm^3 [ft^3]	Stroke frequency depending on total stroke [min^{-1}]	Temperature range °C [°F]	Weight Kg [lbs]
K400-15-6-1	[153] 0,68	[0.59] 15	[900lbf] 4	[0.24] 6	[1.75] 40	[0.025] 0,71	5 bis 30	[23 bis 167] - 5 bis +75	[2.6] 1,20
K400-30-6-1		[1.18] 30				[0.031] 0,89			[2.8] 1,25
K400-50-6-1		[1.97] 50				[0.040] 1,14			[2.9] 1,30
K400-70-6-1		[2.76] 70				[0.049] 1,38			[3.0] 1,35
K400-120-6-1		[4.72] 120				[0.070] 1,98			[3.3] 1,50
K400-200-6-1		[7.87] 200				[0.104] 2,94			[3.7] 1,70
K600-15-6-1	[238] 1,06	[0.59] 15	[1350lbf] 6	[0.24] 6	[1.97] 50	[0.047] 1,34	5 bis 30	[23 bis 167] - 5 bis +75	[4.5] 2,05
K600-30-6-1		[1.18] 30				[0.058] 1,65			[4.7] 2,15
K600-50-6-1		[1.97] 50				[0.073] 2,06			[5.1] 2,30
K600-70-6-1		[2.76] 70				[0.087] 2,47			[5.3] 2,40
K600-120-6-1		[4.72] 120				[0.124] 3,50			[6.0] 2,70
K600-200-6-1		[7.87] 200				[0.182] 5,15			[7.1] 3,20
K1000-15-7-1	[393] 1,75	[0.59] 15	[2250lbf] 10	[0.27] 7*	[2.48] 63	[0.078] 2,20	5 bis 30	[23 bis 167] - 5 bis +75	[7.9] 3,60
K1000-30-7-1		[1.18] 30				[0.094] 2,66			[8.4] 3,80
K1000-50-7-1		[1.97] 50				[0.115] 3,26			[9.0] 4,10
K1000-70-7-1		[2.76] 70				[0.136] 3,85			[9.7] 4,40
K1000-120-7-1		[4.72] 120				[0.189] 5,35			[11.5] 5,20
K1000-200-7-1		[7.87] 200				[0.273] 7,74			[14.1] 6,40
K3000-15-6-1	[674] 3	[0.59] 15	[4500lbf] 30	[0.24] 6*	[3.35] 85	[0.158] 4,48	5 bis 25	[23 bis 167] - 5 bis +75	[26.0] 11,80
K3000-30-6-1		[1.18] 30				[0.184] 5,20			[27.6] 12,50
K3000-50-6-1		[1.97] 50				[0.218] 6,17			[29.5] 13,40
K3000-70-6-1		[2.76] 70				[0.252] 7,13			[31.5] 14,30
K3000-120-6-1		[4.72] 120				[0.337] 9,54			[36.6] 16,60
K3000-200-6-1		[7.87] 200				[0.473] 13,40			[44.5] 20,20
K4500-15-6-1	[944] 4,2	[0.59] 15	[10120lbf] 45	[0.24] 6*	[3.94] 100	[0.218] 6,18	5 bis 25	[23 bis 167] - 5 bis +75	[29.3] 13,30
K4500-30-6-1		[1.18] 30				[0.253] 7,17			[30.9] 14,00
K4500-50-6-1		[1.97] 50				[0.300] 8,50			[33.1] 15,00
K4500-70-6-1		[2.76] 70				[0.347] 9,83			[34.8] 15,80
K4500-120-6-1		[4.72] 120				[0.466] 13,20			[39.9] 18,10
K4500-200-6-1		[7.87] 200				[0.653] 18,50			[47.8] 21,70

* Power strokes up to 12 mm and other forward strokes upon request

Type K in standard version

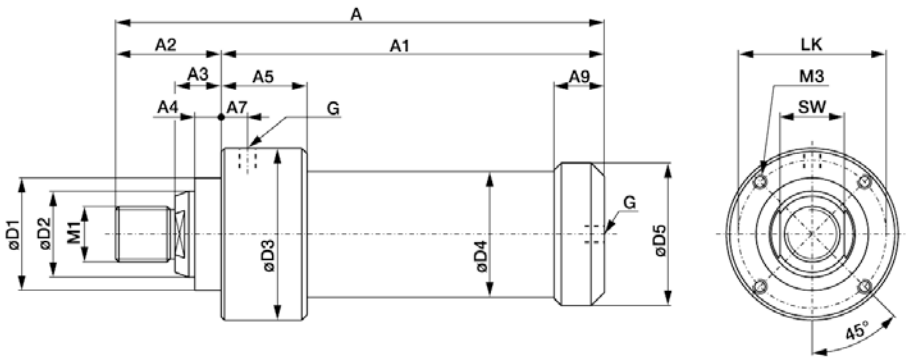

Model	Dimensions for standard version of type K Differences of dimensions for cylinder with magnet piston rings see chart on page MC-PPC-10																
	A	A_1	A_2	A_3	A_4	A_5	A_7	A_9	Ø D_1	Ø D_2	Ø D_3	Ø D_4	Ø D_5	M_1	M_3	LK	SW	G
K400-15-6-1	[7.32] 186	[5.71] 145	[1.6] 41	[0.8] 21	[0.5] 12	[1.5] 39	[0.4] 10	[0.9] 23,5	[1.6] 40_{h8}	[1.0] 25_{h7}	[2.5] 63	[1.7] 44	[1.9] 49	[0.06] M16 x 1,5	[0.1] M5, 10mm tief	[2.1] 54	[0.8] 21	G1/8
K400-30-6-1	[7.91] 201	[6.30] 160																
K400-50-6-1	[8.70] 221	[7.09] 180																
K400-70-6-1	[9.49] 241	[7.87] 200																
K400-120-6-1	[11.46] 291	[9.84] 250																
K400-200-6-1	[14.61] 371	[12.99] 330																
K600-15-6-1	[7.91] 201	[6.30] 160	[1.6] 41	[0.8] 21	[0.5] 12	[1.5] 39	[0.4] 10	[0.9] 23,5	[1.6] 40_{h8}	[1.0] 25_{h7}	[2.9] 73	[2.1] 54	[2.3] 59	[0.06] M16 x 1,5	[0.1] M6, 10mm tief	[2.5] 64	[0.1] 21	G1/8
K600-30-6-1	[8.50] 216	[6.89] 175																
K600-50-6-1	[9.29] 236	[7.68] 195																
K600-70-6-1	[10.08] 256	[8.46] 215																
K600-120-6-1	[12.05] 306	[10.43] 265																
K600-200-6-1	[15.20] 386	[13.58] 345																
K1000-15-7-1	[9.57] 243	[7.36] 187	[2.2] 56	[1.0] 25	[0.6] 15	[2.0] 52	[0.4] 10	[1.1] 29	[2.5] 63_{h8}	[1.6] 40_{h7}	[3.9] 100	[2.7] 68	[2.9] 74,5	[0.98] M24	[1] M8, 12mm tief	[3.3] 85	[1.3] 32	G1/8
K1000-30-7-1	[10.16] 258	[7.95] 202																
K1000-50-7-1	[10.94] 278	[8.74] 222																
K1000-70-7-1	[11.73] 298	[9.53] 242																
K1000-120-7-1	[13.70] 348	[11.50] 292																
K1000-200-7-1	[16.85] 428	[14.65] 372																

TYPE K SERIES

Pneumatic Power Cylinders | Technical Information

Type K in standard version

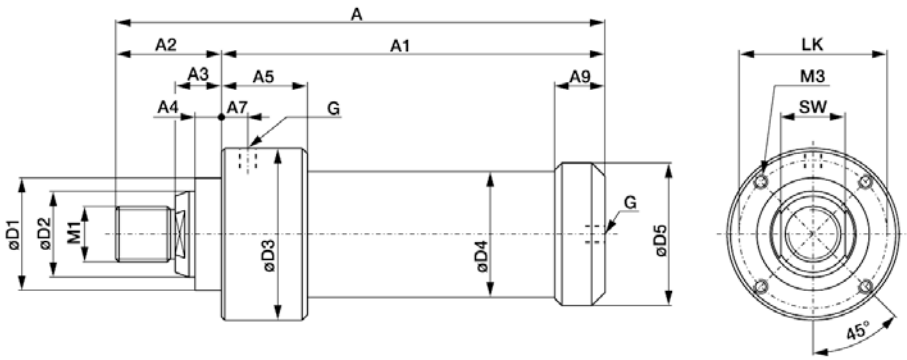

Model	Dimensions for standard version of type K Differences of dimensions for cylinder with magnet piston rings see chart on page MC-PPC-10																
	A	A_1	A_2	A_3	A_4	A_5	A_7	A_9	Ø D_1	Ø D_2	Ø D_3	Ø D_4	Ø D_5	M_1	M_3	LK	SW	G
K3000-15-6-1	[12.40] 315	[9.25] 235	[3.1] 80	[1.4] 35	[0.8] 20	[2.8] 70	[0.8] 20	[1.8] 45	[3.3] 85_{h8}	[2.6] 65_{h7}	[5.1] 130	[3.7] 95	[4.3] 108	[1.65] M42	[1.7] M10, 16mm tief	[4.4] 112	[2.2] 55	G1/4
K3000-30-6-1	[12.99] 330	[9.84] 250																
K3000-50-6-1	[13.78] 350	[10.63] 270																
K3000-70-6-1	[14.57] 370	[11.42] 290																
K3000-120-6-1	[16.54] 420	[13.39] 340																
K3000-200-6-1	[19.69] 500	[16.54] 420																
K4500-15-6-1	[12.40] 315	[9.25] 235	[3.1] 80	[1.4] 35	[0.8] 20	[2.8] 70	[0.8] 20	[1.8] 45	[3.3] 85_{h8}	[2.6] 65_{h7}	[5.7] 145	[4.3] 110	[4.8] 123	[1.65] M42	[1.7] M10, 16mm tief	[5.0] 127	[2.2] 55	G1/4
K4500-30-6-1	[12.99] 330	[9.84] 250																
K4500-50-6-1	[13.78] 350	[10.63] 270																
K4500-70-6-1	[14.57] 370	[11.42] 290																
K4500-120-6-1	[16.54] 420	[13.39] 340																
K4500-200-6-1	[19.69] 500	[16.54] 420																



- Piston rod with ISO fit

Note:
Operating pressure max. [87psi]6 bar, min [44psi] 3 bar. Use only clean, water- and oilfree compressed air.Piston rod is not secured against twisting and should not be loaded transversal.
See page MC-PPC-2 for more information.

Model	Piston force within forward stroke at 6 bar kN [lbf]	Forward stroke mm [in]	Clamping force within power stroke at 6 bar kN [lbf]	Power stroke mm [in]	Piston dia. mm [in]	Air consumption per double stroke at 6 bar dm^3 [ft^3]	Stroke frequency depending on total stroke [min^{-1}]	Temperature range °C [°F]	Weight [lbs] kg
WK400-15-6-1	[153] 0,68	[0.59] 15	[900lbf] 4	[0.24] 6	[1.75] 40	[0.025] 0,71	5 bis 30	[23 bis 167] - 5 bis +75	[2.6] 1,20
WK400-30-6-1		[1.18] 30				[0.031] 0,89			[2.8] 1,25
WK400-50-6-1		[1.97] 50				[0.040] 1,14			[2.9] 1,30
WK400-70-6-1		[2.76] 70				[0.049] 1,38			[3.0] 1,35
WK400-120-6-1		[4.72] 120				[0.070] 1,98			[3.3] 1,50
WK400-200-6-1		[7.87] 200				[0.104] 2,94			[3.7] 1,70
WK600-15-6-1	[238] 1,06	[0.59] 15	[1350lbf] 6	[0.24] 6	[1.97] 50	[0.047] 1,34	5 bis 30	[23 bis 167] - 5 bis +75	[4.5] 2,05
WK600-30-6-1		[1.18] 30				[0.058] 1,65			[4.7] 2,15
WK600-50-6-1		[1.97] 50				[0.073] 2,06			[5.1] 2,30
WK600-70-6-1		[2.76] 70				[0.087] 2,47			[6.3] 2,40
WK600-120-6-1		[4.72] 120				[0.124] 3,50			[6.6] 2,70
WK600-200-6-1		[7.87] 200				[0.182] 5,15			[7.1] 3,20
WK1000-15-7-1	[393] 1,75	[0.59] 15	[2250lbf] 10	[0.27] 7*	[2.48] 63	[0.078] 2,20	5 bis 30	[23 bis 167] - 5 bis +75	[7.9] 3,60
WK1000-30-7-1		[1.18] 30				[0.094] 2,66			[8.4] 3,80
WK1000-50-7-1		[1.97] 50				[0.115] 3,26			[9.0] 4,10
WK1000-70-7-1		[2.76] 70				[0.136] 3,85			[9.7] 4,40
WK1000-120-7-1		[4.72] 120				[0.189] 5,35			[11.5] 5,20
WK1000-200-7-1		[7.87] 200				[0.273] 7,74			[14.1] 6,40
WK3000-15-6-1	[674] 3	[0.59] 15	[4500lbf] 30	[0.24] 6*	[3.35] 85	[0.158] 4,48	5 bis 25	[23 bis 167] - 5 bis +75	[26.0] 11,80
WK3000-30-6-1		[1.18] 30				[0.184] 5,20			[27.6] 12,50
WK3000-50-6-1		[1.97] 50				[0.218] 6,17			[29.5] 13,40
WK3000-70-6-1		[2.76] 70				[0.252] 7,13			[31.5] 14,30
WK3000-120-6-1		[4.72] 120				[0.337] 9,54			[36.6] 16,60
WK3000-200-6-1		[7.87] 200				[0.473] 13,40			[44.5] 20,20
WK4500-15-6-1	[944] 4,2	[0.59] 15	[10120lbf] 45	[0.24] 6*	[3.94] 100	[0.218] 6,18	5 bis 25	[23 bis 167] - 5 bis +75	[29.3] 13,30
WK4500-30-6-1		[1.18] 30				[0.253] 7,17			[30.9] 14,00
WK4500-50-6-1		[1.97] 50				[0.300] 8,50			[33.1] 15,00
WK4500-70-6-1		[2.76] 70				[0.347] 9,83			[34.8] 15,80
WK4500-120-6-1		[4.72] 120				[0.466] 13,20			[37.9] 18,10
WK4500-200-6-1		[7.87] 200				[0.653] 18,50			[47.8] 21,70
WK6000-30-6	[1350] 6,0	[1.18] 30	[13490lbf] 60,0	[0.24] 6*	[4.92] 125,0	[0.367] 10,40	5 bis 25	[23 bis 167] - 5 bis +75	[52.9] 24,00
WK6000-50-6		[1.97] 50				[0.454] 12,85			[54.0] 24,50
WK6000-70-6		[2.76] 70				[0.536] 15,17			[55.1] 25,00
WK6000-120-6		[4.72] 120				[0.747] 21,15			[58.4] 26,50

* Power strokes up to 12 mm and other forward strokes upon request

TYPE WK SERIES

Pneumatic Power Cylinders | Technical Information

Type WK in standard version

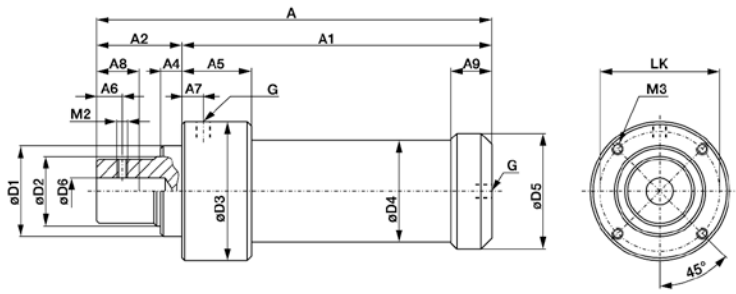

Model	Dimensions for standard version of type WK Differences of dimensions for cylinder with magnet piston rings see chart on page MC-PPC-10																	
	A	A_1	A_2	A_4	A_5	A_7	A8**	A9	Ø D_1	Ø D_2	Ø D_3	Ø D_4	Ø D_5	Ø D_6	M_2	M_3	LK	G
WK400-15-6-1	[7.32] 186	[5.71] 145	[1.61] 41	[0.47] 12	[1.54] 39	[0.39] 10	[0.98] 25	[0.93] 23,5	[1.57] 40_{h8}	[0.98] 25_{h7}	[2.48] 63	[1.73] 44	[1.93] 49	10^{H7}	M6	[0.06] M5, 10mm tief	[2.13] 54	G1/8
WK400-30-6-1	[7.91] 201	[6.30] 160																
WK400-50-6-1	[8.70] 221	[7.09] 180																
WK400-70-6-1	[9.49] 241	[7.87] 200																
WK400-120-6-1	[11.46] 291	[9.84] 250																
WK400-200-6-1	[14.61] 371	[12.99] 330																
WK600-15-6-1	[7.91] 201	[6.30] 160	[1.61] 41	[0.47] 12	[1.54] 39	[0.39] 10	[0.98] 25	[0.93] 23,5	[1.57] 40_{h8}	[0.98] 25_{h7}	[2.87] 73	[2.13] 54	[2.32] 59	10^{H7}	M6	[0.06] M6, 10mm tief	[2.52] 64	G1/8
WK600-30-6-1	[8.50] 216	[6.89] 175																
WK600-50-6-1	[9.29] 236	[7.68] 195																
WK600-70-6-1	[10.08] 256	[8.46] 215																
WK600-120-6-1	[12.05] 306	[10.43] 265																
WK600-200-6-1	[15.20] 386	[13.58] 345																
WK1000-15-7-1	[9.57] 243	[7.36] 187	[2.20] 56	[0.59] 15	[2.05] 52	[0.39] 10	[1.57] 40	[1.14] 29	[2.48] 63_{h8}	[1.57] 40_{h7}	[3.92] 99,5	[2.68] 68	[2.93] 74,5	20^{H7}	M8	[0.98] M8, 12mm tief	[3.35] 85	G1/8
WK1000-30-7-1	[10.16] 258	[7.95] 202																
WK1000-50-7-1	[10.94] 278	[8.74] 222																
WK1000-70-7-1	[11.73] 298	[9.53] 242																
WK1000-120-7-1	[13.70] 348	[11.50] 292																
WK1000-200-7-1	[16.85] 428	[14.65] 372																

Continued on next page

Type WK in standard version

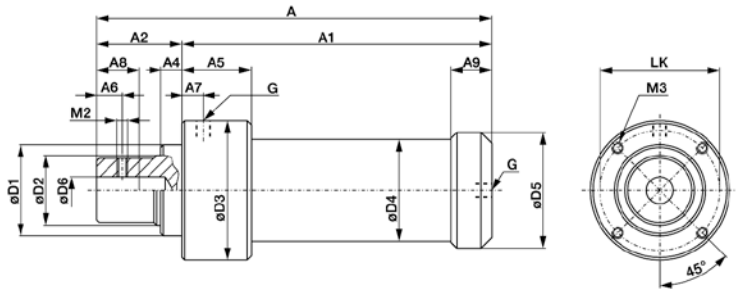

Modell	Dimensions for standard version of type WK Differences of dimensions for cylinder with magnet piston rings see chart on page MC-PPC-10																	
	A	A_1	A_2	A_4	A_5	A_7	A8**	A9	Ø D_1	Ø D_2	Ø D_3	Ø D_4	Ø D_5	Ø D_6	M_2	M_3	LK	G
WK3000-15-6-1	[12.40] 315	[9.25] 235	[3.15] 80	[0.79] 20	[2.76] 70	[0.79] 20	[1.57] 40	[1.77] 45	[3.35] 85_{h8}	[2.56] 65_{h7}	[5.12] 130	[3.74] 95	[4.25] 108	25^{H7}	M10	[16] M10, 16mm tief	[4.41] 112	1/4
WK3000-30-6-1	[12.99] 330	[9.84] 250																
WK3000-50-6-1	[13.78] 350	[10.63] 270																
WK3000-70-6-1	[14.57] 370	[11.42] 290																
WK3000-120-6-1	[16.54] 420	[13.39] 340																
WK3000-200-6-1	[19.69] 500	[16.54] 420																
WK4500-15-6-1	[12.40] 315	[9.25] 235	[3.15] 80	[0.79] 20	[2.76] 70	[0.79] 20	[1.57] 40	[1.77] 45	[3.35] 85_{h8}	[2.56] 65_{h7}	[5.71] 145	[4.33] 110	[4.84] 123	25^{H7}	M10	[1.65] M10, 16mm tief	[5.00] 127	1/4
WK4500-30-6-1	[12.99] 330	[9.84] 250																
WK4500-50-6-1	[13.78] 350	[10.63] 270																
WK4500-70-6-1	[14.57] 370	[11.42] 290																
WK4500-120-6-1	[16.54] 420	[13.39] 340																
WK4500-200-6-1	[19.69] 500	[16.54] 420																
WK6000-30-6	[14.37] 365	[11.22] 285	[3.15] 80	[0.79] 20	[3.3] 84	[0.87] 22	[1.57] 40	[2.09] 53	[3.35] 85_{h8}	[2.56] 65_{h7}	[7.01] 178	[5.31] 135	[5.83] 148	25^{H7}	M10	M12, 18mm tief	[5.91] 150	1/2
WK6000-50-6	[15.16] 385	[12.01] 305																
WK6000-70-6	[15.94] 405	[12.80] 325																
WK6000-120-6	[17.91] 455	[14.76] 375																

** Usable depth of bore with ISO fit D6

TYPE WR SERIES

Pneumatic Power Cylinders | Product Overview

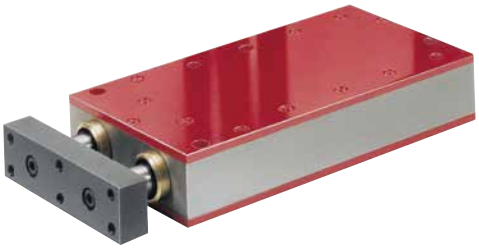

- Piston rods prevent twisting

Note:

Use only clean, water- and oilfree compressed air. Force must be transmitted via the centre of the pressure plate. One-sided loading of the pressure plate should be avoided. For punching applications contact our technical support! See page MC-PPC-2 for more information.

Type WR

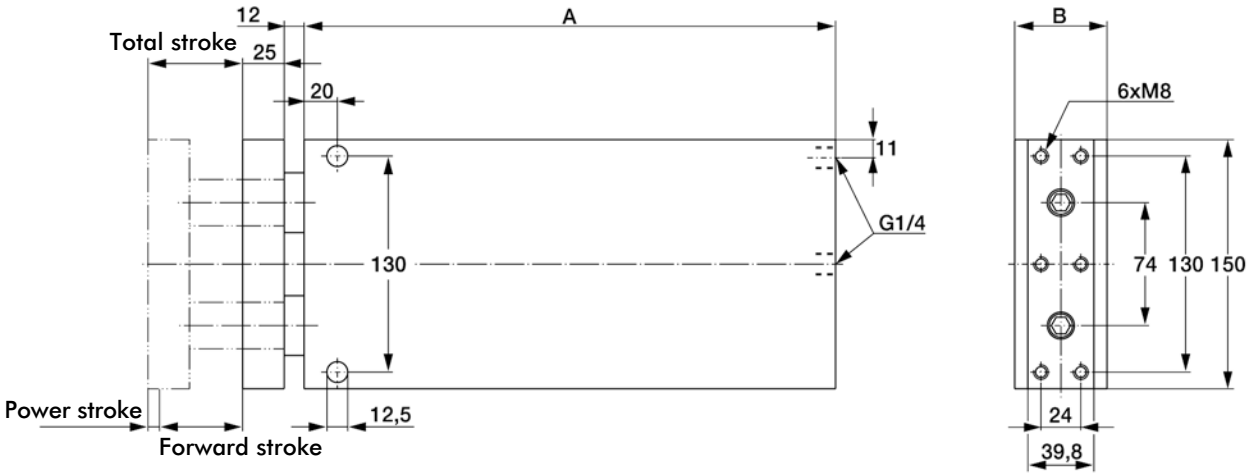

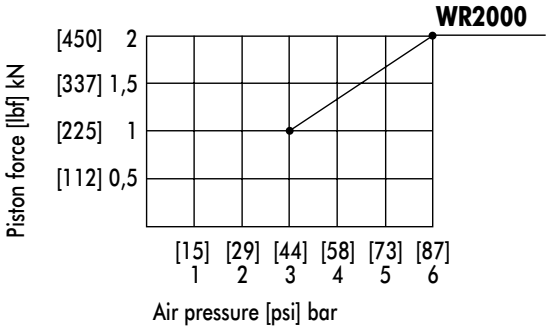

Return stroke force: half of piston force

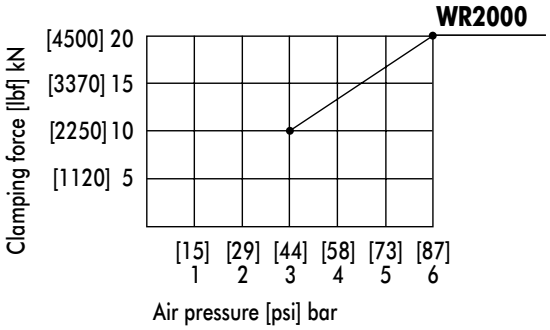

Air pressure: max. [87psi] 6 bar; min. [44psi] 3 bar

Model	Piston force within forward stroke at 6 bar kN [lbf]	Forward stroke mm [in]	Clamping force within power stroke at 6 bar [lbf] kN	Power stroke mm [in]	Piston dia. mm [in]	Air consumption per double stroke at 6 bar dm³ [ft³]	Stroke frequency depending on total stroke [min⁻¹]	Temperature range °C [°F]	Weight kg [lbs]	A	B
WR 2000-15-7	[450] 2	[0.59] 15	[4500] 20	[0.27] 7	[2.76] 70	[0.086] 2,44	5 - 25	[23 to up167] -5 up to +75	[27.6] 12,5	285	51,6
WR 2000-30-7		[1.18] 30				[0.104] 2,95			[30.9] 14,0	300	51,6
WR 2000-50-7		[1.97] 50				[0.128] 3,62			[34.1] 15,5	320	55,6
WR 2000-70-7		[2.76] 70				[0.151] 4,27			[37.9] 17,2	340	55,6
WR 2000-120-7		[4.72] 120				[0.210] 5,94			[46.3] 21,0	390	59,6

Dimensions and technical information are subject to change without notice

Pneumatic Power Cylinders Type K and WK with end position control by magnetic field sensors.

- **For the sizes**
  K and WK 400…. , K and WK 600… ,
  K and WK 1000…. K and WK 3000…,
  K and WK 4500…

- **Change of Model**
  Indicate „-A“ at the end of Model instead of „-1“ for standard version!
  Example:
  K400 – 15 – 6 – 1 change to K400 – 15 – 6 – A
  WK 3000 – 50 – 6 – 1 change to WK 3000 - 50 – 6 – A

- **Change in construction**
  Only the dimensions Ø D4, Ø D5, A/A 1 and A9 are different to the standard version.



- **Standard equipment (as shown above)**
  Pneumatic Power Cylinders with “-A” at the end of Model are completely furnished with a magnetic piston ring and with two mounted sensor sets (Model SMB-102157, consisting of magnetic field sensor with 3m cable, clamp and strap)

Type K

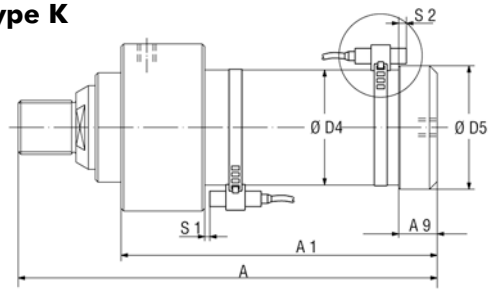

Switching points of sensors			**Differences of dimensions compared with standard version				
For sizes	S1*	S2*	Ø D4	Ø D5	A/A 1	A9	Rs
K 400-...-A	5	12	-	-	+15	-	44
K 1000-...-A	10	18	-	-	+15	-	56
K 3000-...-A	5	14	90	97	-	30	67
K 45000-...-A	5	12	106	113	-	28,5	75

* Approx. data, because of magnet field variations. S1 refers to the max. power stroke and enlarges up to 60 mm, when smaller power strokes are used.

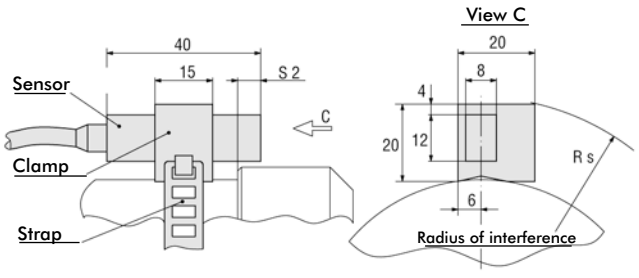

Circuit diagram and technical data of sensor set Model **SMB-102157**, consisting of magnetic field sensor with 3 m cable, clamp and strap (2 sets per cylinder are standard equipment).

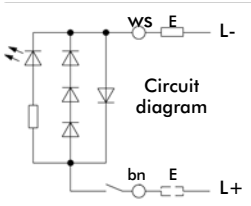

Switching voltage	10...250 VAC/DC
Switching current	0,5 A
Switching power	20 W/30 VA
Function	normally open contact
Protection class	IP 67 (DIN 40050)
Indicator	LED

Type WK

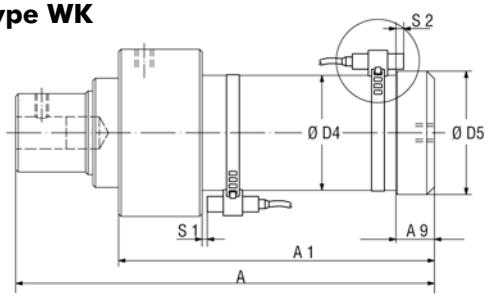

Switching points of sensors			**Differences of dimensions compared with standard version				
For sizes	S1*	S2*	Ø D4	Ø D5	A/A 1	A9	Rs
WK 400-...-A	5	12	-	-	+15	-	44
WK 1000-...-A	10	18	-	-	+15	-	56
WK 3000-...-A	5	14	90	97	-	30	67
WK 45000-...-A	5	12	106	113	-	28,5	75

* Approx. data, because of magnet field variations. S1 refers to the max. power stroke and enlarges up to 60 mm, when smaller power strokes are used.

-K OPTION

Magnetic Field Sensing | Technical Specifications



Sensor cage for T-slot proximity sensor

- For the sizes
  K and WK 400…. , K and WK 600… , K and WK 1000…. ,
  K and WK 3000…, K and WK 4500…

- Change of Model
  Indicate "-K" at the end of Model instead of "-A" for standard version.
  Example:
  K400 – 15 – 6 – A change to K400 – 15 – 6 – K
  WK 3000 – 50 – 6 – A change to WK 3000 - 50 – 6 – K

- Benefits:
  Small radii of interference.
  Customer specific T-slot sensors are usable.

- Standard equipment:
  Pneumatic power cylinder with "-K" at the end of Model number are supplied with mounted sensor cages but without T-slot sensors.

PNEUMATIC POWER CYLINDERS

Application Examples



Radius clinching unit for profiled aluminium

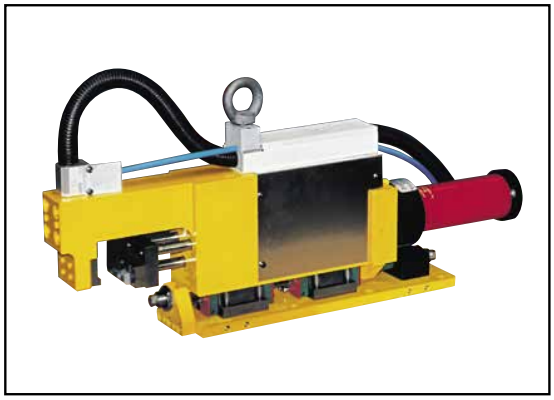

Special punching unit for 2 holes Ø 3,4 in steel 0,9 mm

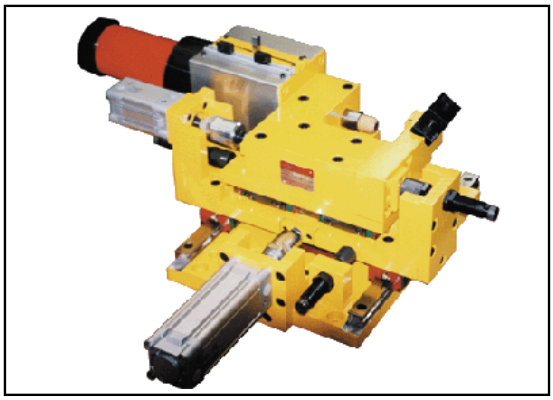

Special device for 2 holes Ø 12 in steel 1,2 mm

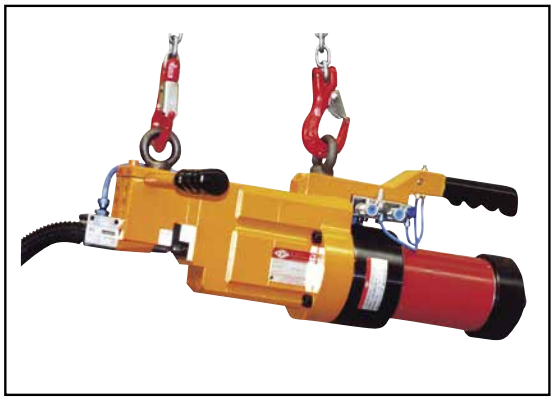

Mobile punching unit for holes Ø 6,2 in crossbeams

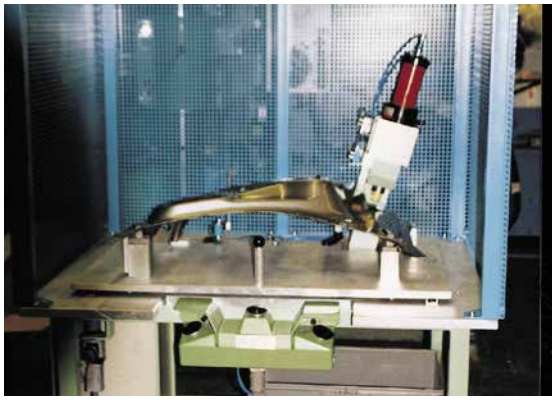

Device for holes Ø 8 in sheet metal



Stamping units placed in line



Stamping units placed in line



Welding fixture for exhaust components

HYDRAULIC POWER CLAMPS

Table of Contents

Hydraulic Clamping		Page MC-HYD-#
	010-210-400 010-210-501 010-210-702 010-211-002 010-211-004 010-211-502 010-211-504 010-212-004	3-4
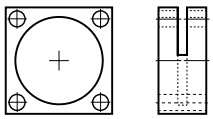	052-Series	4
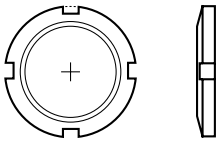	051-Series	4
	020-011-011DE 020-012-021DE 020-013-031DE	5

Hydraulic Clamping		Page MC-HYD-#
	030-1-S-475 030-1-D-475	7
	030-1-S-1100 030-1-D-1100	8
	030-1-S-2400 030-1-D-2400	9
	030-1-S-4000 030-1-D-4000	10 10
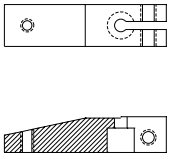	031-S-475 031-L-475 031-S-1100 031-L-1100 031-S-2400 031-L-2400 031-S-4000 031-L-4000	11-12
	039-101-000DE 039-104-000DE	13

Dimensions and technical information are subject to change without notice

BUILDING SAFE HYDRAULIC SYSTEMS

Safety means paying attention to the smallest details. A hastily assembled workholding system can result in a hazardous operator environment. Hydraulic workholding is not a generic technique where most anything will work, nor is there one right or best answer for all situations. Each application is different and can be approached in many different ways. Because of this versatility, there is no rule-of-thumb to follow to guarantee safety. A careful balance of knowledge, fixture design and common sense are key to avoiding injuries.

Plan your fixture installation with operator safety in mind. By nature, most clamping devices have pinch points. Many times the fixture can be designed to shield the operator from a pinching hazard. Often the placement of the clamping device in the fixture can minimize the gap between the clamp and the workpiece, thus reducing or eliminating the pinch point. Perhaps the clamping control valve or switch can be located such that the operator cannot reach the fixture and the control at the same time. Dual palm buttons on electrically-actuated systems serve the same purpose.

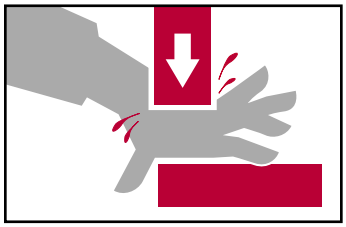

Do not require the operator to hold the workpiece in position during the clamping operation. Make sure that the workpiece is self-supporting and self-locating so that operator hands are out of danger when the hydraulic system is actuated. Often a simple spring plunger is all that is necessary.

The lowest pressure rating of any component in the clamping system sets the *maximum* pressure rating for the entire system.

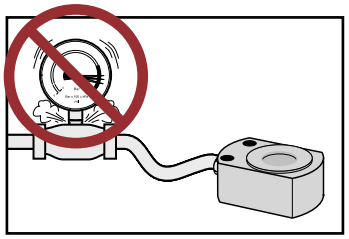

Most hydraulic workholding components are rated at 5,000 PSI maximum. However, some components are rated at less than 5,000 PSI. The maximum pressure is listed on each product page of this catalog. *Never exceed this rating.*

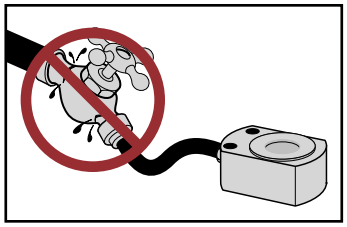

Just having a clamp that is rated at 5,000 PSI is not enough. Every hose, fitting, valve, adapter and tube exposed to pressure must be rated at or above the maximum hydraulic system pressure. Most "hardware store" fittings are intended only for low pressure plumbing. *Never use water pipe fittings or copper tubing and brass fittings for hydraulic service.*

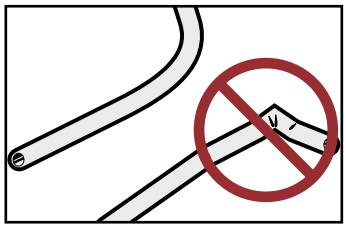

Use proper tools when bending tubing, and maintain proper minimum bend radii for hoses and tubing. If a hose or tube is ever kinked, replace it. Don't risk a rupture. Fluid escaping under high pressure is dangerous. The resulting loss in pressure could release the workpiece from the fixture and cause serious injury and equipment damage by being ejected from the machine or breaking tooling.

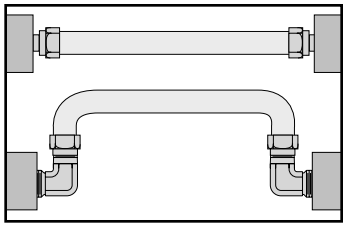

Tubing and hoses do flex when pressurized. Allow for that movement by supporting the fluid lines away from surfaces which could abrade the surface and eventually cause damage. Avoid straight lengths of hose and tubing. A bend will allow for this deflection without putting too much stress on the line.

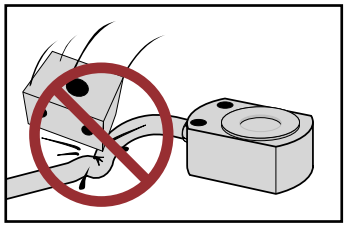

Even if proper hydraulic tubing and fittings are specified, be sure to protect them from abuse. Components damaged from abrasion or accidental dropping of a workpiece will no longer have the strength and safety of the original design.

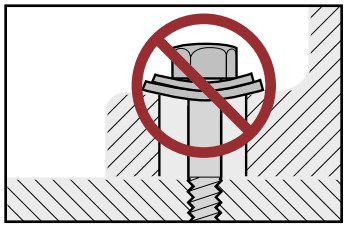

Use **proper mounting** hardware when installing workholding clamps and other components. Always use the largest bolt available to fit in the mounting hole. In many cases, the recommended cap screw or thread is specified on the product page of this catalog. Sometimes the mounting hardware is included with the component. Always use supplied hardware.

Safety means paying attention to the smallest details.

010 SERIES

Hydraulic Power Clamps | Hydraulic Threaded Body Cylinders Product Overview

The single-action, spring-return hydraulic power cylinders are small pistons that can be used singly or combined. They offer tremendous force in a small, easily mounted package that can be used in any attitude and requires only a single inlet port. They are often used grouped together by a common manifold to provide as much force as needed for the operation. For a relatively small volume of oil, they provide exceptional exerting force, and are generally the best choice if stroke lengths can be kept short.



Features:

- Threaded body for easy mounting
- Small size permits "low profile" workholding
- Accessories available for easy mounting
- Available in metric or inch sizes (Metric on special request)
- Hardened piston and rod
- Single-acting for simple plumbing
- Wide variety of sizes and strokes
- Pressure capacity up to 5,000 PSIG, provided piston does not bottom out

Technical Information

Model no.	SAE Ports	Threaded Body	Stoke	Force at 3,000 PSIG	Oil Displacement	Effective Area For Clamping	Jam Nuts
010-210-400	#2	1/2-20	0.22	277 lbs.	0.020 cu. in.	0.092	Furnished
010-210-501	#4	3/4-16	0.31	588 lbs.	0.061 cu. in.	0.196	Furnished
010-210-702	#4	1-12	0.50	1,326 lbs.	0.221 cu. in.	0.442	Furnished
010-211-002	#4	1 5/16-16	0.50	2,355 lbs.	0.393 cu. in.	0.785	Optional
010-211-004	#4	1 5/16-16	1.00	2,355 lbs.	0.785 cu. in.	0.785	Optional
010-211-502	#4	1 7/8-16	0.50	5,301 lbs.	0.884 cu. in.	1.767	Optional
010-211-504	#4	1 7/8-16	1.00	5,301 lbs.	1.767 cu. in.	1.767	Optional
010-212-004	#4	2 1/2-16	1.00	9,423 lbs.	3.142 cu. in.	3.142	Optional

Dimensions and technical information are subject to change without notice

Hydraulic Power Clamps | Hydraulic Threaded Body Cylinders Product Overview

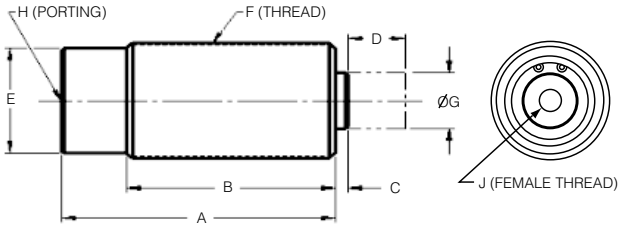

Model no.	Dimensions (In Inches)								
	A	B	C	D	E	F	G	H	J
010-210-400	1.66	1.41	0.19	0.22	.044 Hex	1/2-20	0.15	SAE #2	–
010-210-501	2.25	1.97	0.22	0.31	.062 Hex	3/4-16	0.22	SAE #4	–
010-210-702	2.56	2.31	0.31	0.50	.075 Hex	1-12	.024	SAE #4	–
010-211-002	2.63	2.25	0.13	0.50	1.00 Hex	1 5/16-16	0.64	SAE #4	1/4-20
010-211-004	3.63	3.25	0.12	1.00	1.00 Hex	1 5/16-16	0.64	SAE #4	1/4-20
010-211-502	2.94	2.57	0.13	0.50	1.50 Hex	1 7/8ß-16	1.00	SAE #4	5/16-18
010-211-504	4.59	4.22	0.14	1.00	1.50 Hex	1 7/8-16	1.00	SAE #4	5/16-18
010-212-004	4.13	3.76	0.13	1.00	2.00 Hex	2 1/2-16	1.50	SAE #4	5/16-18

Series **052** Flange Mount

Model no.	Dimensions (In Inches)				
	A	B	C	øD	E
052-112-160	1 1/8-16 UN 2B	1.50	0.50	0.22	1.030
052-131-160	1 5/16-16 UN 2B	1.69	0.50	0.27	1.250
052-137-180	1 3/8-16 UN 2B	1.75	0.50	0.27	1.340
052-187-160	1 7/8-16 UN 2B	2.25	1.00	0.34	1.770
052-250-160	2 1/2-16 UN 2B	3.00	1.00	0.34	2.170

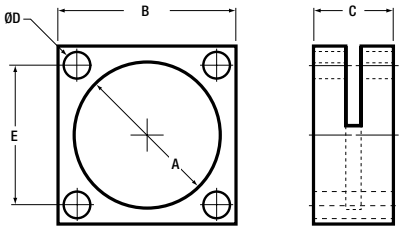

Series **051** Jam Nut

Model no.	Dimensions (In Inches)				
	A	B	C	D	E
051-112-160	1 1/8-16 UN 2B	1.500	0.31	0.250	0.250
051-131-160	1 5/16-16 UN 2B	1.688	0.31	0.250	0.250
051-137-180	1 3/8-16 UN 2B	1.875	0.31	0.250	0.250
051-187-160	1 7/8-16 UN 2B	2.625	0.38	0.312	0.132
051-250-160	2 1/2-16 UN 2B	3.250	0.50	0.312	0.312

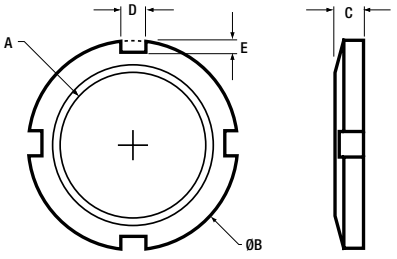

020 SERIES

Hydraulic Power Clamps | Thru-Hole Hydraulic Ram Product Overview

By inserting a rod through the hollow piston, these cylinders can be used to push or pull depending on the orientation of the ram. They will actuate a rod of any length or shape and are extremely effective in translating power to a remote location. Greater forces are generated in these thru-hole rams because of their larger piston area.



Symbol

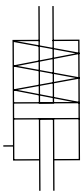

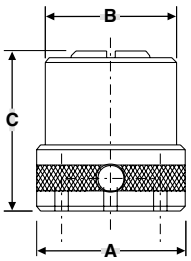

Features:

- Larger piston diameter for greater clamping forces
- Hardened steel piston and rod
- Single-acting for simple plumbing
- Optional threaded inserts
- Optional mounting plate
  (permits mounting ram with a single cap screw)

Model no.	RAM I.D.*	Port	Stroke	Force at 3,000 PSIG	Oil Displacement	Dimensions		
						A	B	C
020-011-011DE	0.38	SAE #2	0.38	4,380 lbs.	0.547 cu. in.	2.13	1.88	2.25
020-012-021DE	0.50	SAE #4	0.50	8,100 lbs.	1.35 cu. in.	3.00	2.63	2.88
020-013-031DE	0.63	SAE #4	0.63	12,066 lbs.	2.51 cu. in.	3.25	3.00	3.63

* Clearance for rod or bolt of given dimension.

Maximum input pressure 3,500 PSIG.

Accessories

All size thru-hole rams are supplied with a thru-hole insert threaded into the top.

RAM no.	Thru-Hole Insert (supplied)
020-011-011DE	705384
020-012-021DE	705512
020-013-031DE	705634

Loads Trasmitted by Various Diameter Screws		
Bolt Size	Wrench Length	F-lbs. (Average)
1/4 UNF	4.00	2,400 lbs.
1/4 UNF	4.00	1,920 lbs.
3/8 UNF	5.75	3,000 lbs.
3/8 UNF	5.75	2,920 lbs.
1/2 UNF	8.00	4,200 lbs.
1/2 UNF	8.00	3,640 lbs.
5/8 UNF	9.00	5,600 lbs.
5/8 UNF	9.00	5,600 lbs.
3/4 UNF	9.00	4,800 lbs.
3/4 UNF	11.00	4,200 lbs.
7/8 UNF	12.00	50,400 lbs.

To determine how much force is needed to replace a manual clamp, use this chart as a guide.

A thru-hole ram easily converts a manual strap clamp into an automatic hydraulic powered clamp. Usually a longer bolt is the only part needed to make this conversion.

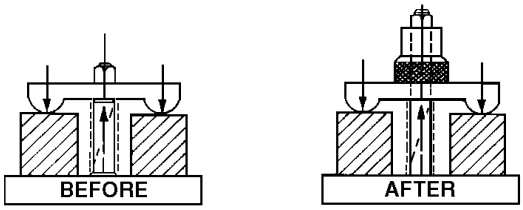



Dimensions and technical information are subject to change without notice

Calculation of Forces Using Straps and Levers

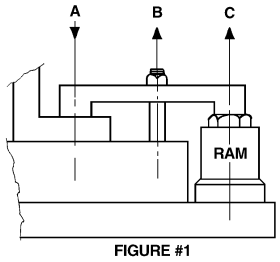

FIGURE #1

Figure #1
When the distance AB is equal to the distance BC the force upward from Model 020-011-011DE Ram "C" is equal to the downward force
"A" on the part.

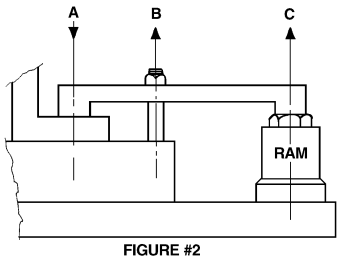

FIGURE #2

Figure #2
The downward force "A" is equal to the upward force "C" times a ratio of the distance BC:AB.
Example:
AB = 2", BC = 4", Force "C" = 1,000 lbs.

Force "A" = Force "C" x $\frac{BC}{AB}$

"A" = 1,000 lbs. x $\frac{4}{2}$

"A" = 2,000 lbs.

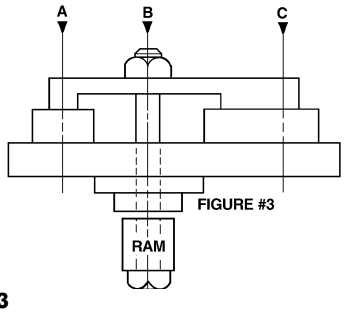

Figure #3
When Force "B" from Model 020-011-011DE Hollow Bore is divided between "A" & "C", the forces at "A" & "C" are in inverse ratio to the distance AB & BC respectively.

Force "A" = Force "B" x $\frac{BC}{AB}$

Force "C" = Force "B" x $\frac{AB}{AC}$

Example:
AB = 2", BC = 4," Force "B" = 1,000 lbs.

Force "A" = 1,000 lbs. x $\frac{4}{6}$ = 666.7 lbs.

Force "C" = 1,000 lbs. x $\frac{2}{6}$ = 333.3 lbs.

Power Sources

Thru-hole Rams can be powered by automatic pumps, hand pumps, boosters or existing machine hydraulics.

Used with automatic pump

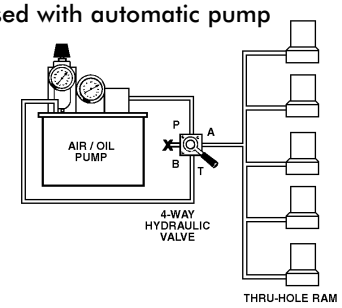

Used with hand pump

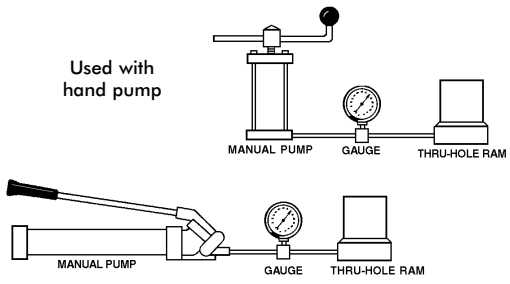

Used with booster

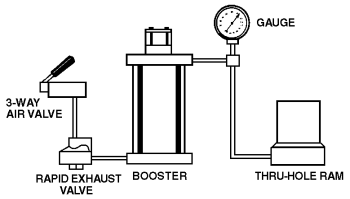

Multiple Uses

Thru-hole Rams can be used to push or pull depending on the position of the ram.

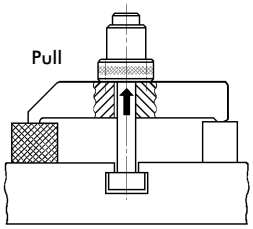

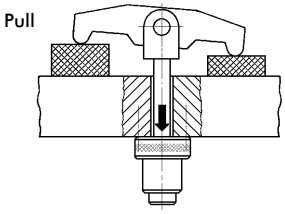

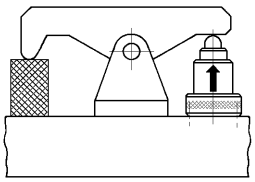

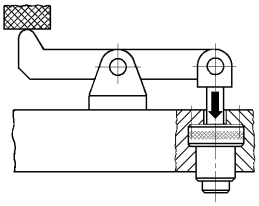

030 SERIES

Hydraulic Power Clamps | Hydraulic Swing Clamps – 475 lb.

The DESTACO Threaded Body Swing Clamps are available in both single-acting and double-acting versions. They incorporate the latest hydraulic swing clamp technology. The top port design allows easy access for plumbing connections.

They are available with 90° left or right hand rotation. The breather port on single-acting models may be replaced with tubing for remote venting. The optional arms clamp securely to the piston rod to reduce fatigue and deflection. Arms may be easily modified or custom arms may be substituted.



Features:

- Advanced seals and wipers utilize a special, highly wear-resistant construction for long cycle life and 5,000 PSI operation
- Triple track piston rod design for field adjustable swing direction
- Hardened and hard chrome plated piston rod for increased strength and wear resistance
- Advanced metal treated body for superior wear and corrosion resistance
- MRO interchange design

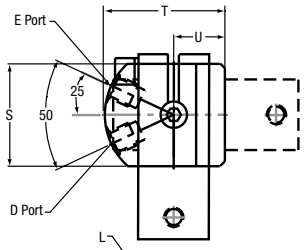

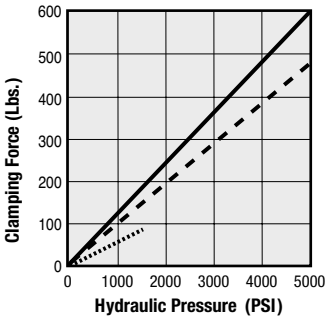

For 475 lb. Swing Clamp Arms see Page MC-HYD-11

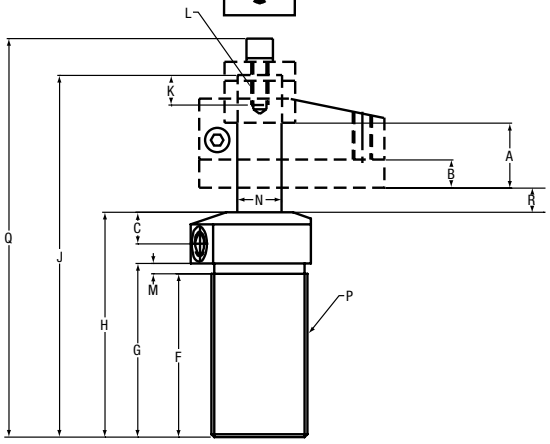

Cat. no.	Specifications							Max Oil Flow in³/m in
	Oper.	Swing Direction	*Force (lbs.)	Eff. Area (sq. In.) Clamp	Eff. Area (sq. In.) Unclamp	Oil Cap. (cu. In.) Clamp	Oil Cap. (cu. In.) Unclamp	
030-1-S-475 (-X) ⓘ	Single-Acting	Left Hand (Counter Clockwise) Right Hand (Clockwise)	475	0.12	–	0.08	–	12
030-1-D-475 (-X) ⓘ	Double-acting				0.24		0.15	

Ordering Notes:
- Left hand swing (ccw) is standard– no suffix
- Add –R suffix for right hand swing

Cat. no.	Specifications																	
	A Total Stroke	B Clamping Stroke	C	D Clamp Port	E Unclamp Port	F	G	H	J	K	L	M	N	P	Q	R	S	T	U
030-1-S-475 ⓘ	0.65	0.210	0.59	SAE-2	SAE-2	1.929	2.086	3.07	4.429	0.8	M6x1	0.157	0.393	1-1/8-16UN	4.96	0.495	1.3	1.55	0.61
030-1-D-475 ⓘ	0.65	0.32	0.59																

ⓘ This item is available upon request

NOTE: *With 1.22" long arm at 5,000 PSI maximum operating pressure.
[4]Do not pressurize – single-acting only
† See page MC-HYD-11 for arms, accessories and custom arm mounting

030 SERIES

Hydraulic Power Clamps | Hydraulic Swing Clamps – 1,100lb.

The DESTACO Threaded Body Swing Clamps are available in both single-acting and double-acting versions. They incorporate the latest hydraulic swing clamp technology. The top port design allows easy access for plumbing connections.

They are available with 90° left or right hand rotation. The breather port on single-acting models may be replaced with tubing for remote venting. The optional arms clamp securely to the piston rod to reduce fatigue and deflection. Arms may be easily modified or custom arms may be substituted.



030-1-S-1100

030-1-D-1100

Features:

- Advanced seals and wipers utilize a special, highly wear-resistant construction for long cycle life and 5,000 PSI operation
- Triple track piston rod design for field adjustable swing direction
- Hardened and hard chrome plated piston rod for increased strength and wear resistance
- Advanced metal treated body for superior wear and corrosion resistance
- MRO interchange design

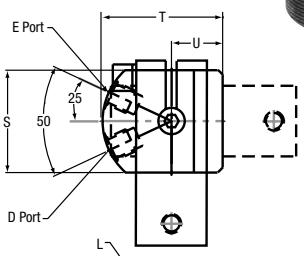

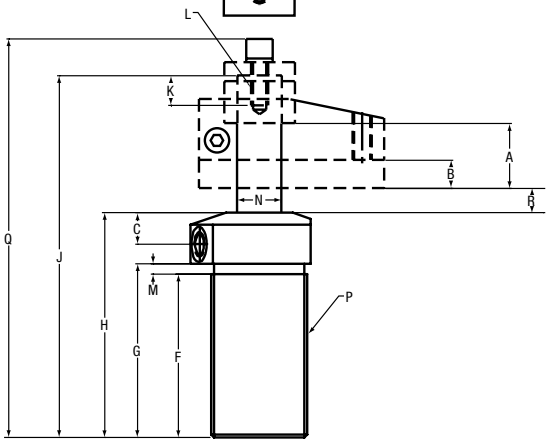

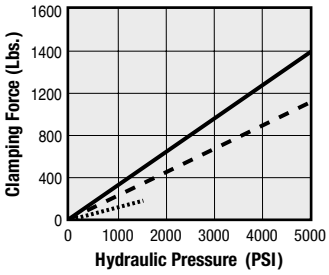

Performance

- With 031-L-1100 Arm (5.31" long)
- With 031-S-1100 Arm (1.89" long)
- Straight Pull

For 1,100 lb. Swing Clamp Arms see Page MC-HYD-12

Cat. no.	Specifications							Max Oil Flow in³/m in
	Oper.	Swing Direction	*Force (lbs.)	Eff. Area (sq. In.) Clamp	Eff. Area (sq. In.) Unclamp	Oil Cap. (cu. In.) Clamp	Oil Cap. (cu. In.) Unclamp	
030-1-S-1000 (-X) ⓘ	Single-Acting	Left Hand (Counter Clockwise) Right Hand (Clockwise)	1100	0.28	–	0.25	–	25
030-1-D-1000 (-X) ⓘ	Double-acting				0.59		0.52	

Ordering Notes:
- Left hand swing (ccw) is standard– no suffix
- Add –R suffix for right hand swing

Cat. no.	Specifications																		
	A Total Stroke	B Clamping Stroke	C	D Clamp Port	E Unclamp Port	F	G	H	J	K	L	M	N	P	Q	R	S	T	U
030-1-S-1100 ⓘ	0.89	0.39	0.6	SAE-4	SAE-4	2.4	2.6	3.58	5.305	0.94	M8 x 1.25	0.196	0.629	1-3/8-18UN	5.965	0.400	1.5	1.87	0.75
030-1-D-1100 ⓘ																			

ⓘ This item is available upon request

NOTE: *With 1.89" long arm at 5,000 PSI maximum operating pressure.
[4]Do not pressurize – single-acting only
† See page MC-HYD-12 for arms, accessories and custom arm mounting

030 SERIES

Hydraulic Power Clamps | Hydraulic Swing Clamps – 2,400 lb.

The DESTACO Threaded Body Swing Clamps are available in both single-acting and double-acting versions. They incorporate the latest hydraulic swing clamp technology. The top port design allows easy access for plumbing connections.

They are available with 90° left or right hand rotation. The breather port on single-acting models may be replaced with tubing for remote venting. The optional arms clamp securely to the piston rod to reduce fatigue and deflection. Arms may be easily modified or custom arms may be substituted.

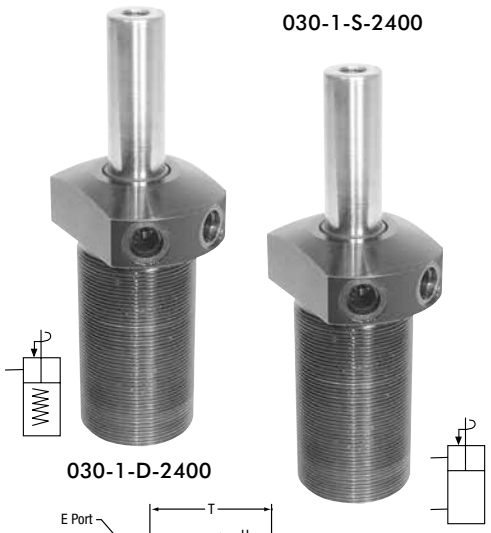

Features:

- Advanced seals and wipers utilize a special, highly wear-resistant construction for long cycle life and 5,000 PSI operation
- Triple track piston rod design for field adjustable swing direction
- Hardened and hard chrome plated piston rod for increased strength and wear resistance
- Advanced metal treated body for superior wear and corrosion resistance
- MRO interchange design

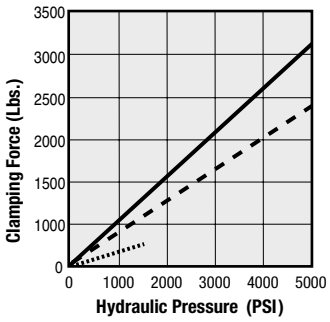

For 2,400 lb. Swing Clamp Arms see Page MC-HYD-11

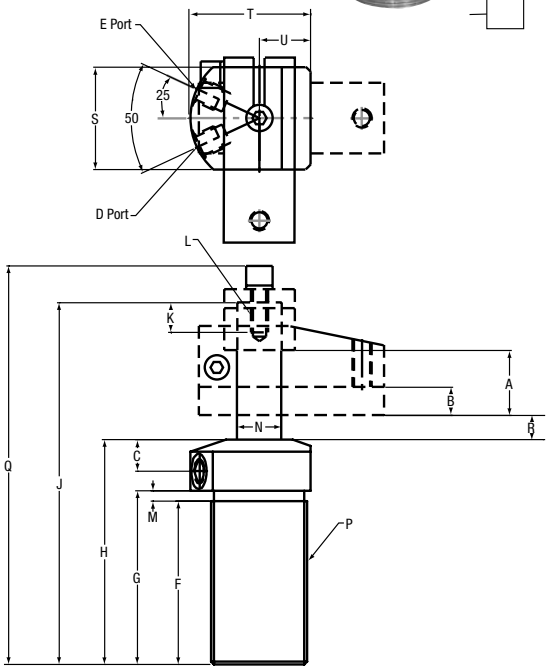

Cat. no.	Specifications							Max Oil Flow in3/m in
	Oper.	Swing Direction	*Force (lbs.)	Eff. Area (sq. In.) Clamp	Eff. Area (sq. In.) Unclamp	Oil Cap. (cu. In.) Clamp	Oil Cap. (cu. In.) Unclamp	
030-1-S-2400 (-X) ⓘ	Single-Acting	Left Hand (Counter Clockwise) Right Hand (Clockwise)	2400	0.63	–	0.7	–	100
030-1-D-2400 (-X) ⓘ	Double-acting				1.23		1.10	

Ordering Notes:
- Left hand swing (ccw) is standard– no suffix
- Add –R suffix for right hand swing

Cat. no.	Specifications																		
	A Total Stroke	B Clamping Stroke	C	D Clamp Port	E Unclamp Port	F	G	H	J	K	L	M	N	P	Q	R	S	T	U
030-1-S-2400 ⓘ	1.12	0.5	0.62	SAE-4	SAE-4 Δ	t	3.38	4.38	6.8	1.28	M10x 1.5	0.196	0.87	1-7/8-16UN	7.543	0.517	2.0	2.38	1.0
030-1-D-2400 ⓘ																			

ⓘ This item is available upon request

NOTE: *With 2.43" long arm at 5,000 PSI maximum operating pressure.
ΔDo not pressurize – single-acting only
† See page MC-HYD-11 for arms, accessories and custom arm mounting

Hydraulic Power Clamps | Hydraulic Swing Clamps – 4,000 lb.

The DESTACO Threaded Body Swing Clamps are available in both single-acting and double-acting versions. They incorporate the latest hydraulic swing clamp technology. The top port design allows easy access for plumbing connections.

They are available with 90° left or right hand rotation. The breather port on single-acting models may be replaced with tubing for remote venting. The optional arms clamp securely to the piston rod to reduce fatigue and deflection. Arms may be easily modified or custom arms may be substituted.



Features:

- Advanced seals and wipers utilize a special, highly wear-resistant construction for long cycle life and 5,000 PSI operation
- Triple track piston rod design for field adjustable swing direction
- Hardened and hard chrome plated piston rod for increased strength and wear resistance
- Advanced metal treated body for superior wear and corrosion resistance
- MRO interchange design

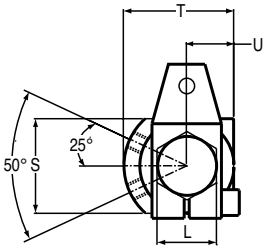

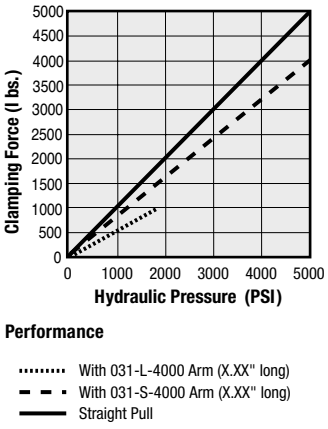

For 4,000 lb. Swing Clamp Arms see Page MC-HYD-11

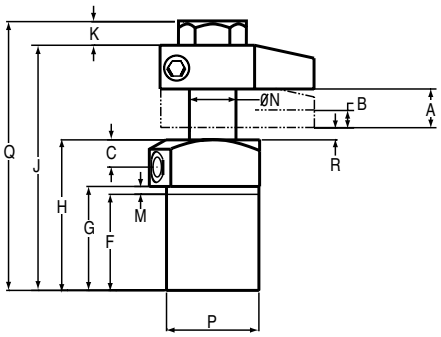

Cat. no.	Specifications							Max Oil Flow in³/m in
	Oper.	Swing Direction	*Force (lbs.)	Eff. Area (sq. In.) Clamp	Eff. Area (sq. In.) Unclamp	Oil Cap. (cu. In.) Clamp	Oil Cap. (cu. In.) Unclamp	
030-1-S-4000 (-X) ⓘ	Single-Acting	Left Hand (Counter Clockwise) Right Hand (Clockwise)	4000	1.10	–	1.22	–	140
030-1-D-4000 (-X) ⓘ	Double-acting				2.35		2.60	

ⓘ This item is available upon request

Ordering Notes:
- Left hand swing (ccw) is standard– no suffix
- Add –R suffix for right hand swing

Cat. no.	Specifications																		
	A Total Stroke	B Clamping Stroke	C	D Clamp Port	E Unclamp Port	F	G	H	J	K	L	M	N	P	Q	R	S	T	U
030-1-S-4000 ⓘ	1.07	0.45	0.75	SAE#4	SAE#4	2.70	2.83	4.09	6.67	0.64	1.61	0.14	1.26	2-1/2-16 UN	7.30	0.33	2.56	2.99	1.28
030-1-D-4000 ⓘ																			

ⓘ This item is available upon request

NOTE: *With 2.75" long arm at 5,000 PSI maximum operating pressure.
Δ Do not pressurize – single-acting only
† See page MC-HYD-11 for arms, accessories and custom arm mounting

030 SERIES

Hydraulic Power Clamps | Hydraulic Swing Clamps 475-2,400 lb. Arms

Custom built arms of any length must clamp to the swing clamp's piston rod in a manner similar to the DESTACO arms or some derating of the clamp will be necessary.

The design feature "K," in the chart and drawing at the bottom of this page, is recommended for all applications of custom, single arms. See the accompanying chart for design details. In applications where there is no bending stress being transferred into the piston rod (like push/pull linkages and equalizing double arms), this design detail may be eliminated. In these applications, the clamp's full capacity (referred to as "straight pull" capacity) is available.

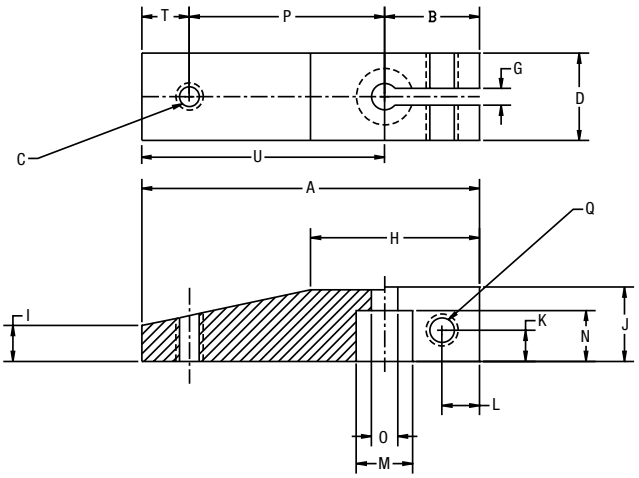

Cat. no.	Specifications																	Weight (lbs.)
	A	B	C	D	G	H	I	J	K	L	M	N	O	P	Q	T	U	
031-S-475	1.929	0.709	M6	0.63	0.126	1.139	0.394	0.630	0.236	0.217	0.394	0.394	0.256	0.984	M6	0.236	1.220	0.159
031-L-475	3.959	0.709	–	0.63		1.166	0.394	0.630			0.394	0.394	0.256	–	M6	–	3.250	0.348
031-S-1100	2.598	0.709	M8	0.748		1.294	0.433	0.748			0.630	0.472	0.33	1.575	M6	0.315	1.889	0.286
031-L-1100	6.019	0.709	–	0.748		1.412	0.433	0.748			0.630	0.472	0.335	–	M6	–	5.310	0.721
031-S-2400	3.268	0.866	M10	1.125		1.459	0.633	1.00			0.866	0.709	0.413	1.969	M8	0.433	2.402	0.634
031-L-2400	7.226	0.866	–	1.125		1.696	0.633	1.00			0.866	0.709	0.413	–	M8	–	6.360	1.564

IMPORTANT: Any clamp using a modified or custom arm that is longer or heavier than DESTACO's standard arms must be derated to prevent internal damage.

Do not exceed the maximum speed and pressure ratings for DESTACO's standard arms.
For maximum hydraulic pressure and speed ratings, see the accompanying charts
Do not use meter-out circuitry for controlling double-acting clamp speeds
Contact DESTACO if further design assistance is required

Custom Arm Mounting Dimensions for Swing Clamps

Shaft Dia.	Specifications										
	A	B	C	D	E	F	G	H	J	K	M
10 MM	0.394	0.256	0.63	0.63	0.709	1.26	0.394	0.236	0.217	0.30	M6 x 1.0
16MM	0.630	0.335	0.748	0.748	0.709		0.472	0.236	0.217		M6 x 1.0
22 MM	0.866	0.413	1.00	1.00	0.866		0.709	0.236	0.217		M8 x 1.25

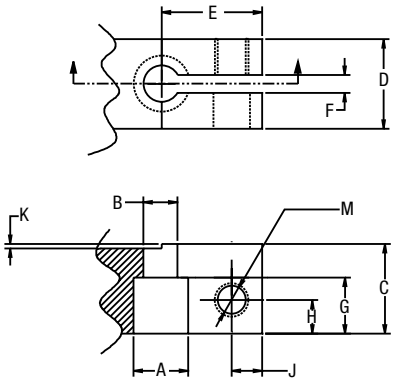

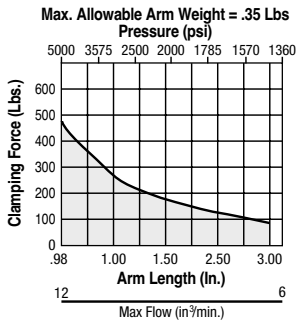

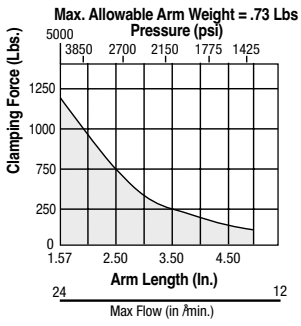

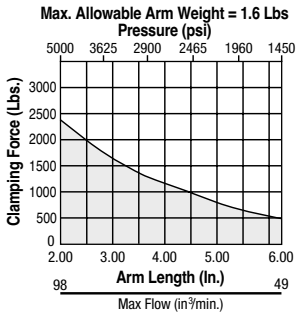

Chart Legend

Maximum Length / Pressure
Operating Range

Clamps must operate at or below maximum arm length/pressure curve:

To approximate clamping force with any arm at less than maximum pressure:

FORCE = P x A x [1-(P/M x .23)]

P = Hyd. system operating pressure (PSI)
A = Clamp effective area (sq. in.)
M = Max. rated pressure of chosen arm length (PSI)

Hydraulic Power Clamps | Hydraulic Swing Clamps – 4,000 lb. Arms

Custom built arms of any length must clamp to the swing clamp's piston rod in a manner similar to the DESTACO arms or some derating of the clamp will be necessary.

The design feature "K," in the chart and drawing at the bottom of this page, is recommended for all applications of custom, single arms. See the accompanying chart for design details. In applications where there is no bending stress being transferred into the piston rod (like push/pull linkages and equalizing double arms), this design detail may be eliminated. In these applications, the clamp's full capacity (referred to as "straight pull" capacity) is available.

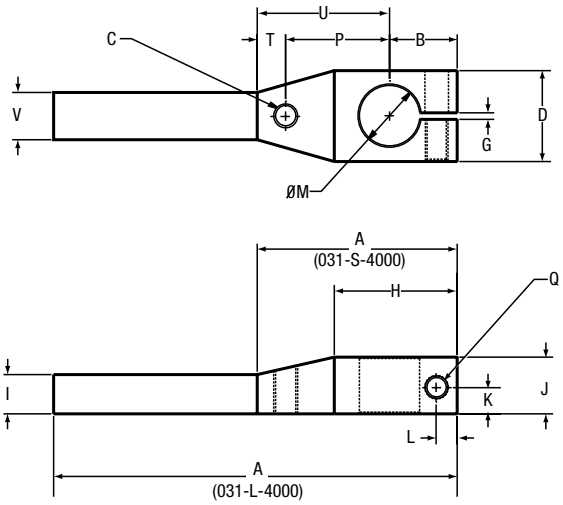

Cat no.	Specifications																
	A	B	C	D	G	H	I	J	K	L	M	P	Q	T	U	V	Weight (lbs.)
031-S-4000	4.17	1.42	1/2-13	1.89	0.138	2.56	0.83	1.18	0.55	0.43	1.26	2.17	M12	0.58	2.75	0.98	1.80
031-L-4000	8.43	1.42	1/2-13	1.89	0.138	2.56	0.83	1.18	0.55	0.43	1.26	–	M12	–	7.01	0.98	2.80

IMPORTANT: Any clamp using a modified or custom arm that is longer or heavier than DESTACO's standard arms must be derated to prevent internal damage.

Do not exceed the maximum speed and pressure ratings for DESTACO's standard arms.
For maximum hydraulic pressure and speed ratings, see the accompanying charts
Do not use meter-out circuitry for controlling double-acting clamp speeds
Contact DESTACO if further design assistance is required

Custom Arm Mounting Dimensions for 4,000 lb. Swing Clamps

Cat no.	Specifications							
	A	B	C	D	E	F	G	H
32MM	1.26	1.18	1.89	1.42	0.138	0.55	0.43	M12 x 1.75

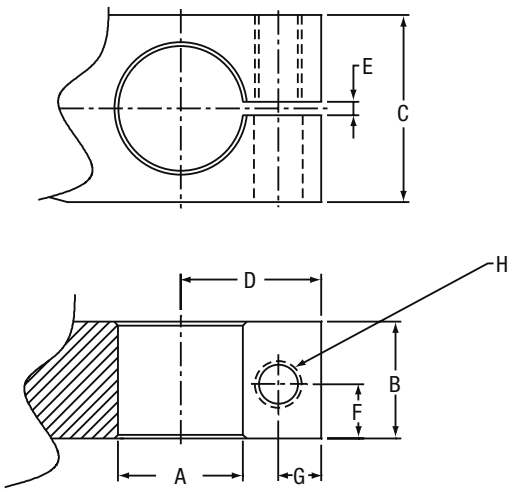

031-S-4000 • 031-L-4000

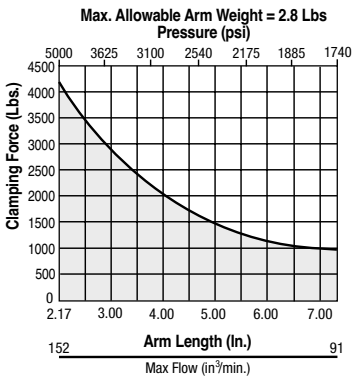

Chart Legend

Maximum Length / Pressure
Operating Range

Clamps must operate at or below maximum arm length/pressure curve:

To approximate clamping force with any arm at less than maximum pressure:

FORCE = P x A x [1-(P/M x .23)]

P = Hyd. system operating pressure (PSI)
A = Clamp effective area (sq. in.)
M = Max. rated pressure of chosen arm length (PSI)

039 SERIES

Hydraulic Power Clamps | Air/Hydraulic Power Boosters

The DESTACO Air/Hydraulic Power Booster converts normal shop-line air pressure to high-pressure hydraulic power. The two models available provide oil displacements ranging from 1 cu. in. to 4 cu. in. per stroke.

With the system filled, the volume of oil required to actuate a cylinder or pressure point is only equal to the cubic content of the piston displacement. The small booster, producing 1 cu. in. of usable oil per stroke, can operate 50 of the tiny 1/2-20 pressure points a full .22 max. stroke, and even more when strokes are kept to a minimum.

039-104-000DE

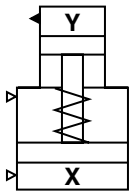



Features:

- Built-in manifold
- Complete automatic bleeding with each return stroke
- Automatic relief of system overcharge
- Automatic bleeding feature eliminates pre-filling
- Large volume visible oil reservoir automatically replenishes the system with reserve oil capacity
- Corrosion and wear-resistant materials
- Wear rings on hydraulic piston tube
- Unique self-centering air piston assures long life
- Increases hydraulic pressure to 3,000 PSIG from 100 PSIG air-line pressure
- All models supplied with SAE hydraulic ports
- NPT hydraulic ports available on request

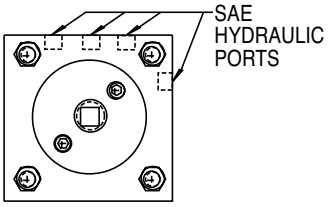

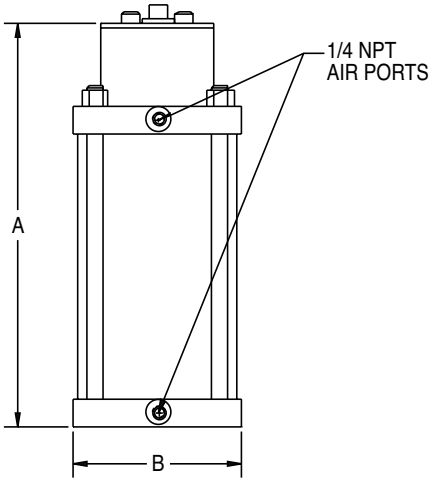

Model no.	Press Ratio	Displace-ment Per Stroke	Nominal Reservoir Capacity	Weight	Dimensions A	Dimensions B (Square)	Ports
039-101-000DE	33.87:1	1 cu. in.	10.4 cu. in.	9 lbs.	10.88	4.50	SAE #4
039-104-000DE	32.41:1	4 cu. in.	42 cu. in.	23 lbs.	16.38	6.50	SAE #4

(100 PSIG max. input air pressure)

Note: Special High Temperature Seals available for applications where Viton® Seals are required. Order as H/T option.

Notes

98W03-2

Electric Pivot Unit | Ordering Information

98W03-2 **10** **A** **0** - **00** - **0**

Motor	Description
10	SEW 400V-Brake

Swivel Arm	Description
A	Center of Pivot Point
B	Below Pivot Point
C	Above Pivot Point

Hard Stop	Description
0	Standard Stop
1R	Audi-Standard Reference Position
1A	Audi-Standard Working Position 0°

Connections	
0	Facing Back
1	Facing Left
2	Facing Front
3	Facing Right

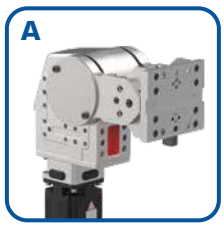

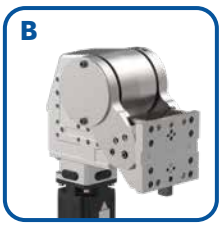

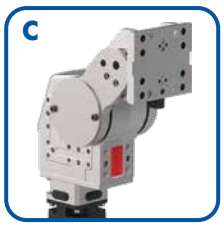

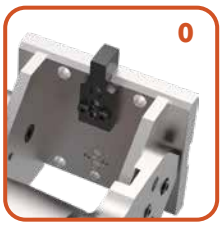

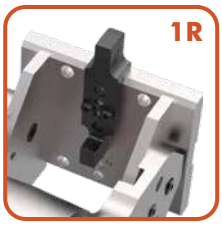

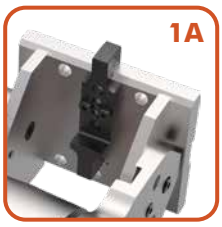









98W03-210

Holding Torque:
2000 Nm [1475 ft-lb]

Dimensions and technical information are subject to change without notice

Compact size and lightweight design

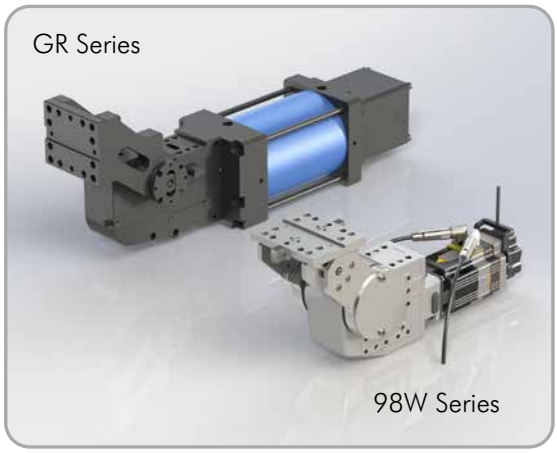

The 98W series electric pivot unit can shares the same mounting pattern as the pneumatic pivot units, while providing greater energy savings with reduced size and weight.

One electric pivot unit replaces four sizes of pneumatic pivot units

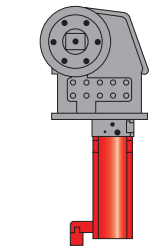

98W03

Electric Pivot Unit

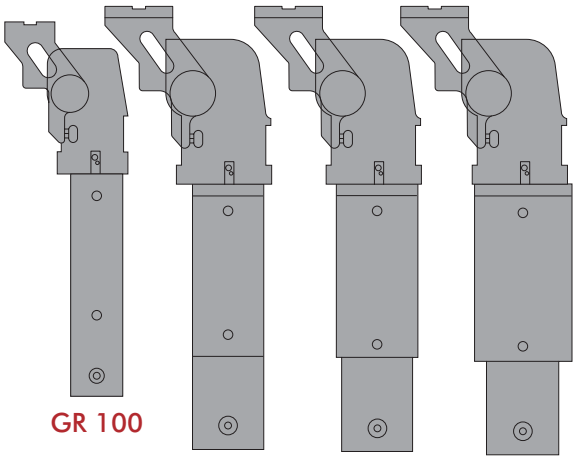

Pneumatic Pivot Units

Easily adjustable saddle arm and mount

The saddle arm of the electric pivot unit can be adjusted into three different starting positions. Each starting positions allows the saddle arm to be pivoted from 135° up to 210°.

With out the saddle arm, the pivot unit can be used as a rotate with 360° rotation.

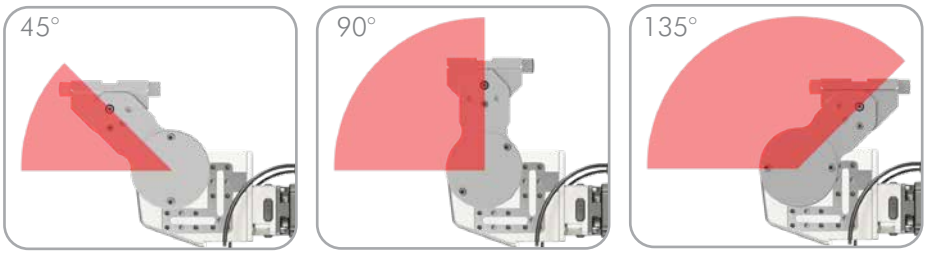

Application Example

98W Series shown with a holding fixture mounted to the saddle mount.



Operating Principle

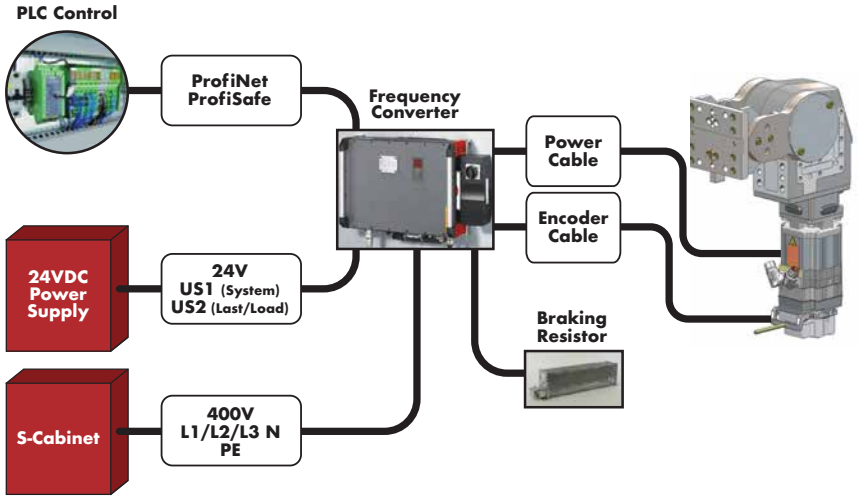

98W03-2

Electric Pivot Unit | Dimensions

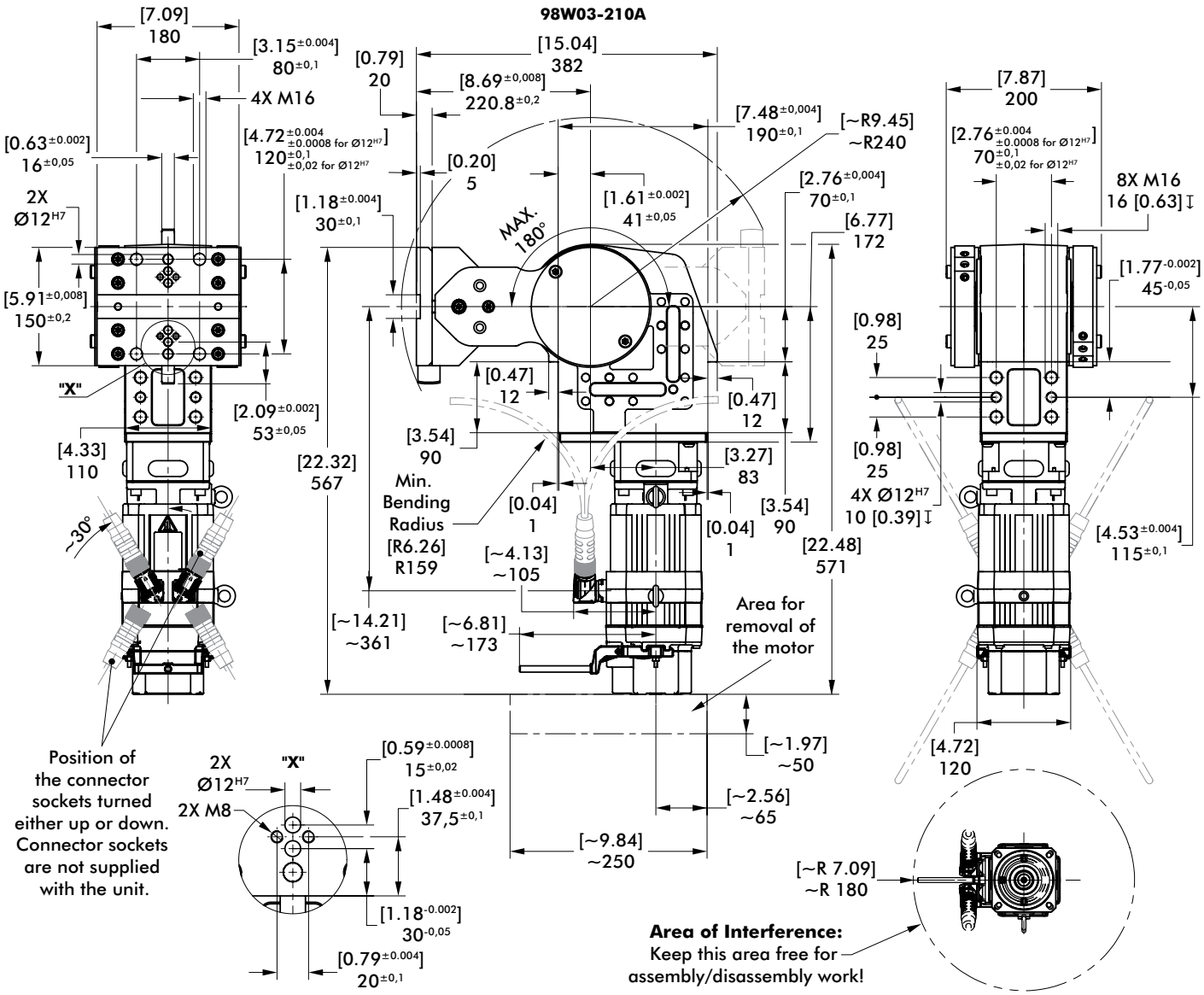

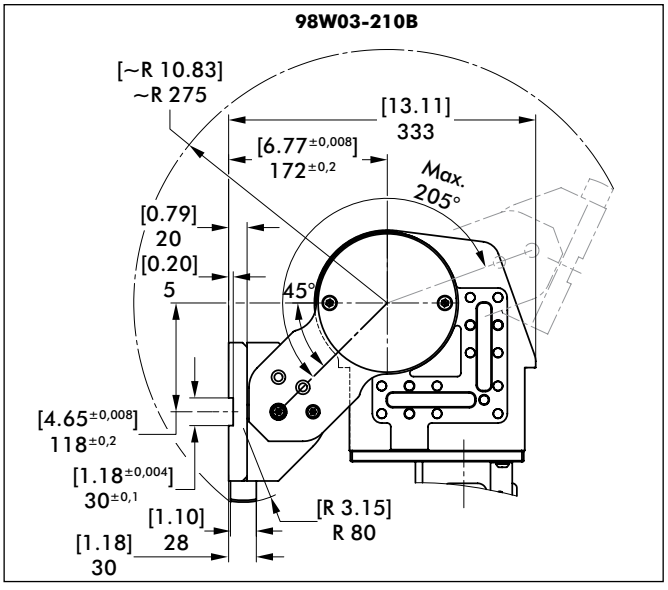

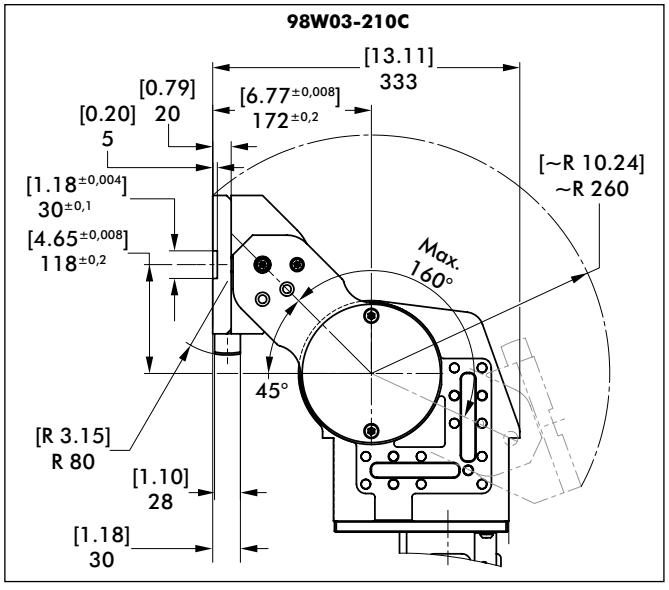

Specification	Units	98W03-210
Input supply voltage for external controller:	VAC	400
Control signals from external PLC		
Return signal to external PLC		
Speeds:		
Rotation from 135° to 0°	sec	4 @ 135°
Holding	sec	3
Rotation from 0° to 135°	sec	4 @ 135°
Holding	sec	3
Gear Ratio		420:1
Torque	Nm [in-lb]	500 [4425]
Static Holding Torque	Nm [in-lb]	2000 [17,701]
Max. Motor Torque (must be limited on the control side)	Nm [in-lb]	6 [53.1]
Max. Permissible Motor Speed	RPM	6000 1/min
Duty Cycle		70%
Permissible Output Speed:		
Radial	N [lbf]	2000 [17,701]
Axial	N [lbf]	5000 [44,254]
E-Stop	N [lbf]	0.4 sec @ 500 [0.4 sec @ 112] = ca. 10°
Acceleration	sec	2
Slow down	sec	2
Weight	Kg [lb]	51,5 [113.54]
Operating Temperature	C° [F°]	0° - 60° [32° - 140°]
Repeatability with Hard Stop	mm [in]	± 0,01 @ 500 [± 0.0004 @ 19.69]
Repeatability without Hard Stop	mm [in]	± 0,05 @ 500 [± 0.002 @ 19.69]

Driving Time and Angle Guidelines

Driving Time via Driving Angle

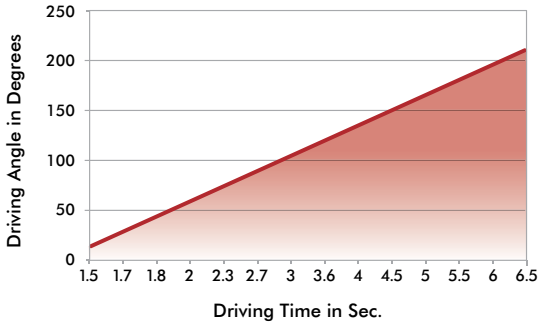

Driving Angle Degrees	Driving Time Sec.	Max Speed RPM	Jolt Time Sec.	Acceleration Ramp ms	Braking Ramp ms	Amplification X-Controller
15	1.4	4017	0.1	500	500	2.23
30	1.7	5862		400	400	
45	1.8	6000				
60	2.0					
75	2.3			500	500	
90	2.7					
105	3.0					
120	3.6			600	600	
135	4.0			800	800	
150	4.5			600	600	
165	5.0	5700		700	700	
180	5.5	5600				
195	6.0	4500		800	800	
210	6.5					

Note:
Maximum speed should not exceed 6000 rpm.

Velocity must never be in a trapezoidal profile. The velocity must have a triangular or sinusoidal shape. Acceleration ramps or jot tiles must be adjusted corresponding to the driving angle.

RCM/RFM

Pneumatic Pivot Units | Ordering Information

RFM 125 .2 - 129 V/LS PX P N X

Base	Description
RCM	Standard
RFM	Integrated Braking

Cylinder	Description
100	100 mm Bore
125	125 mm Bore
160	160 mm Bore
200	200 mm Bore

Opening Angles

100			125, 160, 200		
O	O/LS	V	V/LS	O	O/LS	V	V/LS
N/A				15°			
29°				30°			
45°				43°			
61°				61°			
77°				76°			
92°	N/A	92°		91°	N/A	91°	
104°	N/A	104°		107°	N/A	107°	
121°	N/A	121°		N/A		129°	

Opening angles are easily field adjustable.

Saddle Orientation	Description
O	Horizontal
V	Vertical
O/LS	Inverted Horizontal
V/LS	Inverted Vertical

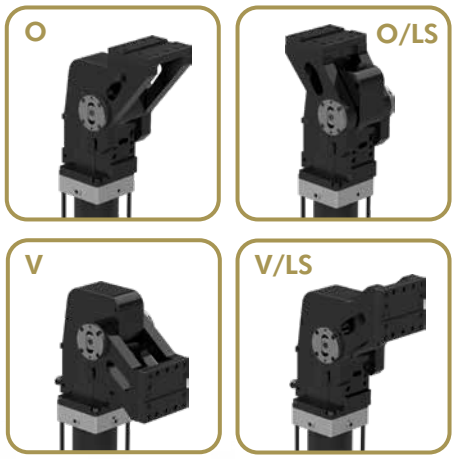

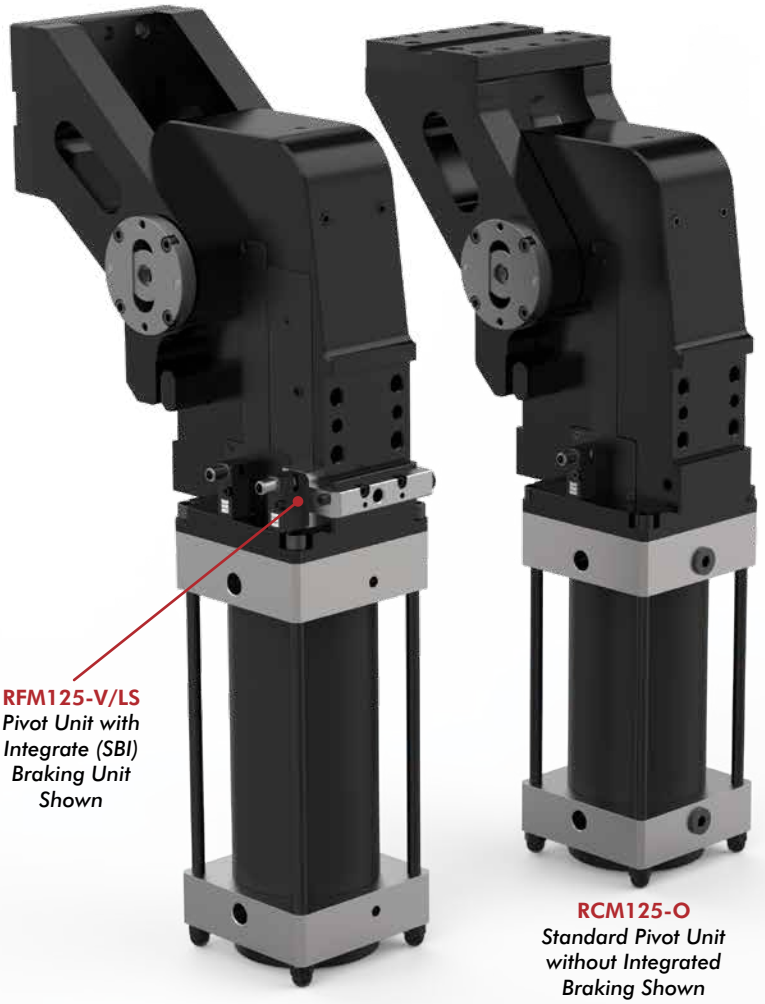

RFM125-V/LS
Pivot Unit with Integrate (SBI) Braking Unit Shown

RCM125-O
Standard Pivot Unit without Integrated Braking Shown

RCM Series



RCM100-O RCM125-O RCM160-O RCM200-O

RFM Series



RFM100-V RFM125-V RFM160-V RFM200-V

Dimensions and technical information are subject to change without notice

Cylinder Orientation	Description
X	Left-Facing Airport
Y	Right-Facing Airport
W	Front-Facing Airport
Z	Rear-Facing Airport

Ports	Description
N	NPT Ports
G	G Port

Proximity Switch Type	Description
0	No Proximity Switch
P	Pepperl+Fuchs Proximity Switch

Proximity Switch Location	Description
P0	No Proximity Switch
PX	Proximity Switch on Left-Side
PY	Proximity Switch on Right-Side

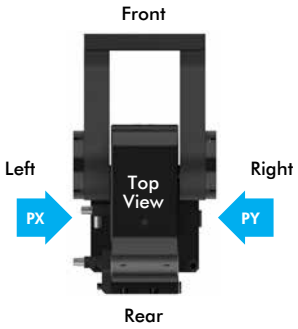

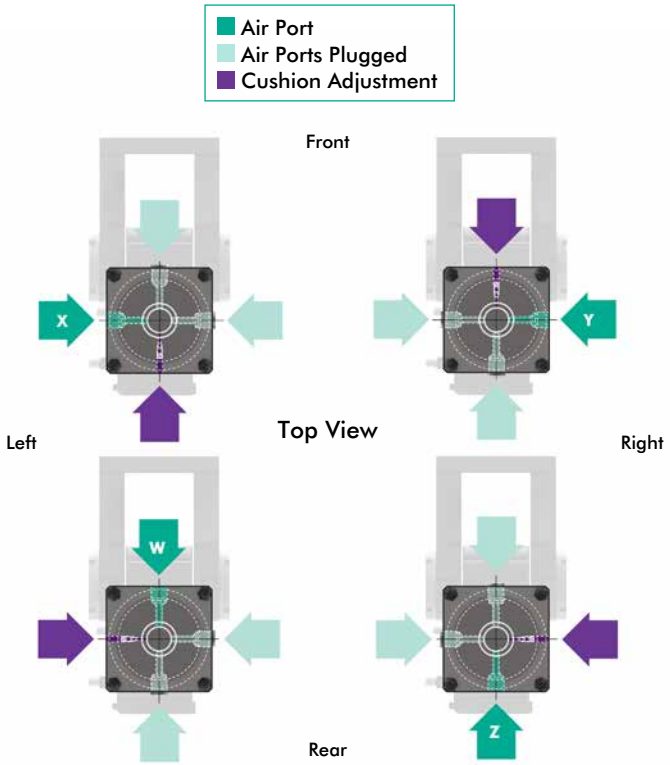

Cylinder Operating Principle

The RFM/RCM series pivot units uses a combined pneumatic and hydraulic cylinder, using a hydraulic/pneumatic piston rod within the standard pneumatic cylinder structure. This will allow for standard pneumatic operation while providing shock absorption or dampening in heavy duty applications during opening and closing positioning.

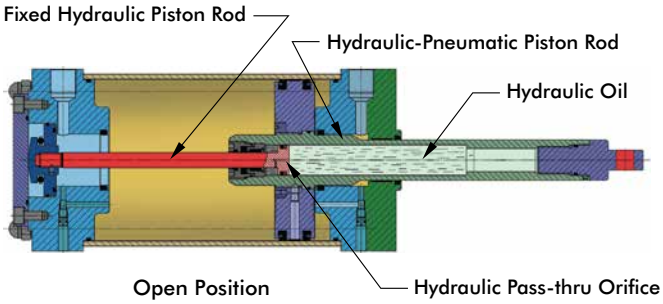

Open Position

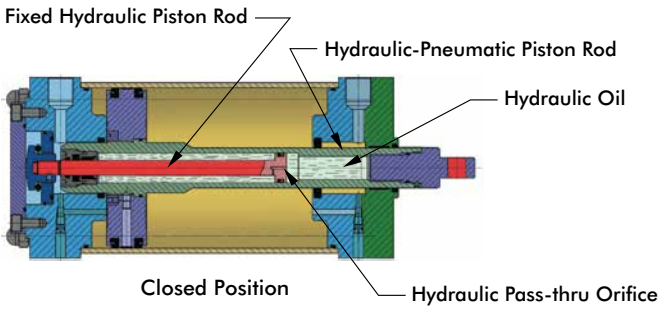

Closed Position

Specifications	Units	100	125	160	200
Max Torque by Load [5 bar] Opening Angle ≤ 92°	Nm [ft-lbs]	150 [111]	240 [171]	410 [302]	660 [487]
Max Torque by Load [5 bar] Opening Angle > 92° / ≤ 121°	Nm [ft-lbs]	110 [81]	180 [133]	300 [221]	480 [354]
Max Torque by Load [5 bar] Opening angle > 121°	Nm [ft-lbs]	55 [41]	65 [48]	100 [74]	175 [129]
Holding Moment	Nm [ft-lbs]	2000 [1475]	3500 [2581]		
RCM Weight	kg [lbs]	~27 [60]	~61 [134]	~74 [163]	~81 [178]
RFM Weight	kg [lbs]	~30 [66]	~64 [141]	~77 [169]	~84 [185]

RCM/RFM

Pneumatic Pivot Units | Dimensions

RCM/RFM100 Vertical "V" Orientation Pivot Dimensions

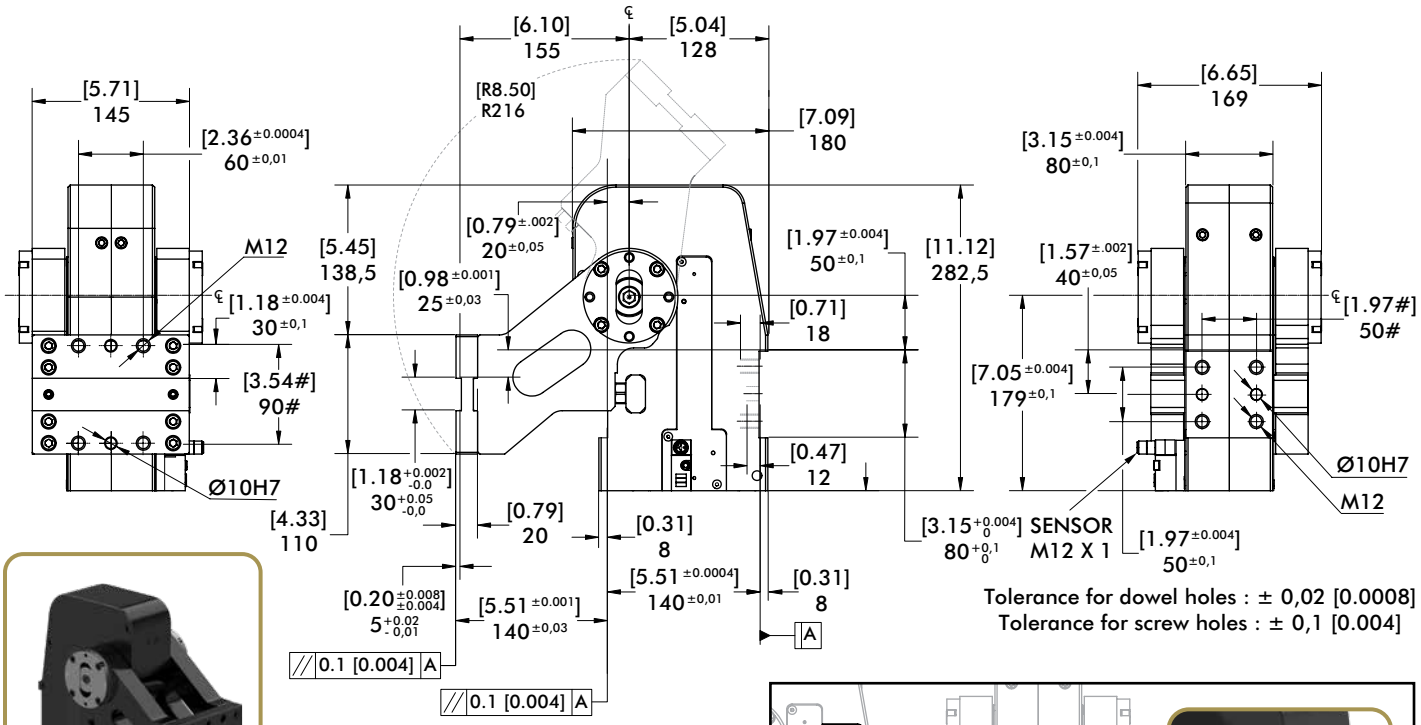

Saddle Arm Weight: [26.19 lbs] 11.88 Kg

Tolerance for dowel holes : ± 0,02 [0.0008]
Tolerance for screw holes : ± 0,1 [0.004]

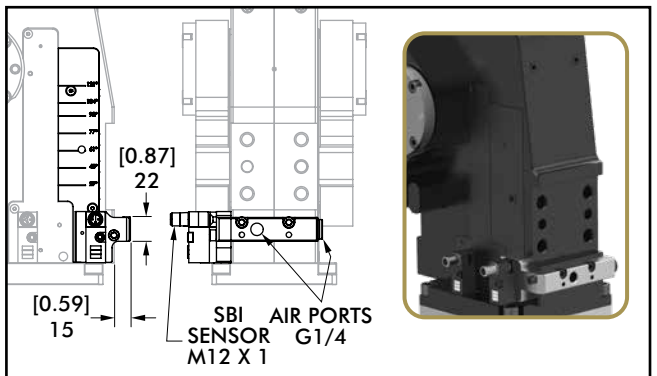

RFM SBI Sensor Unit Dimensions

RCM/RFM100 Vertical "V/LS" Orientation Pivot Dimensions

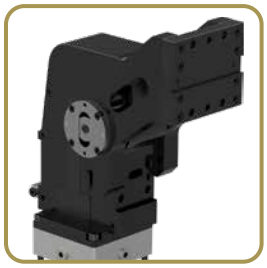

Saddle Arm Weight: [27.38 lbs] 12.42 Kg

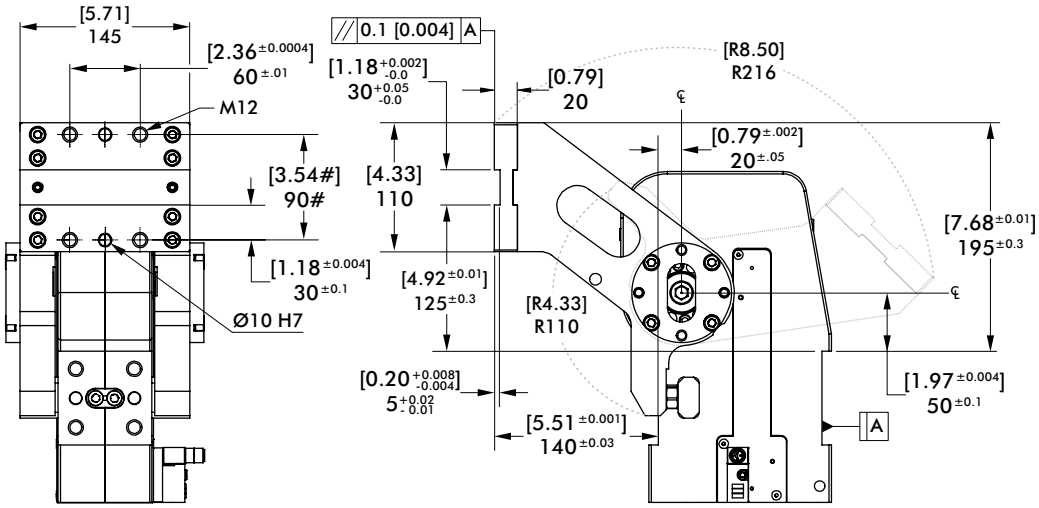

Tolerance for dowel holes : ± 0,02 [0.0008]
Tolerance for screw holes : ± 0,1 [0.004]

RCM/RFM100 Horizontal "O" Orientation Pivot Dimensions

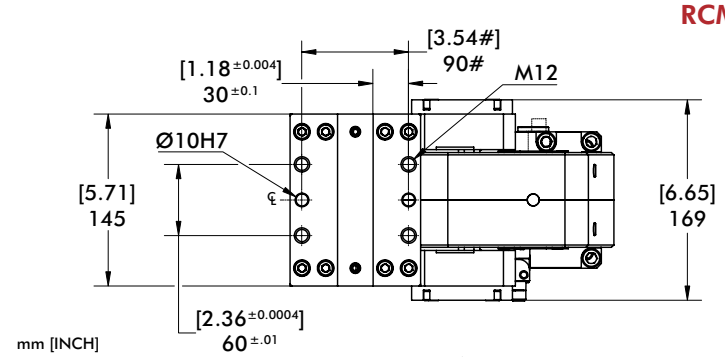

mm [INCH]

THIRD ANGLE PROJECTION

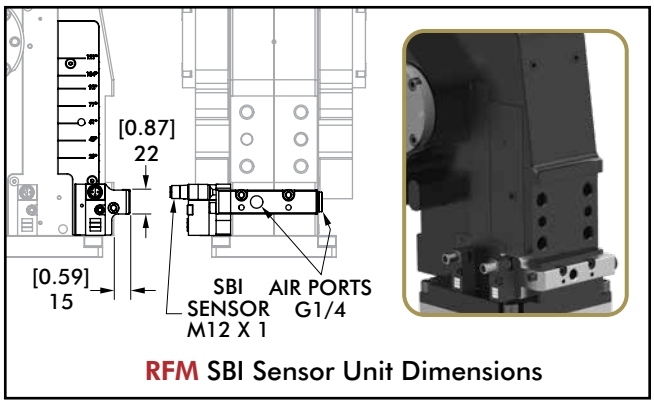

RFM SBI Sensor Unit Dimensions

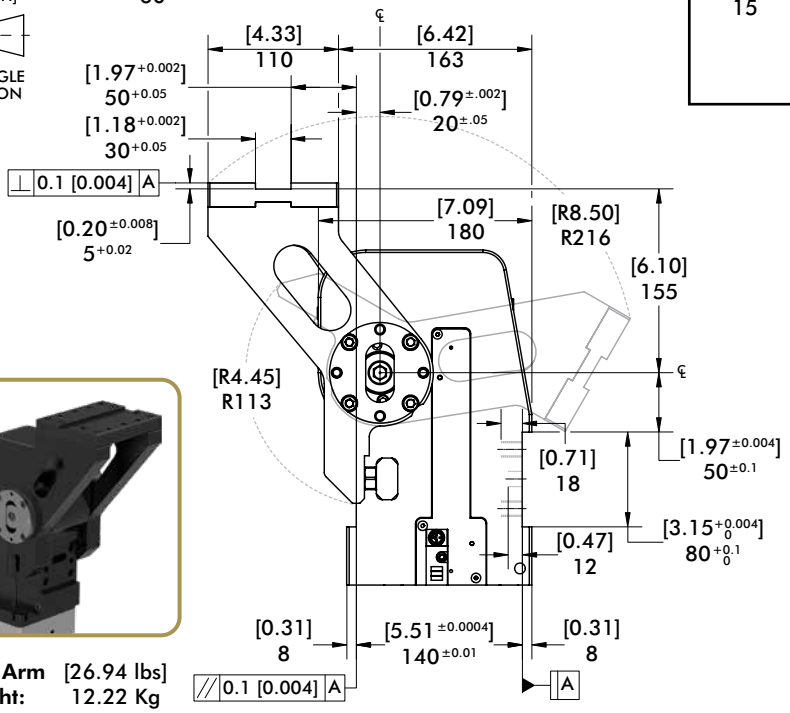

Saddle Arm Weight: [26.94 lbs] 12.22 Kg

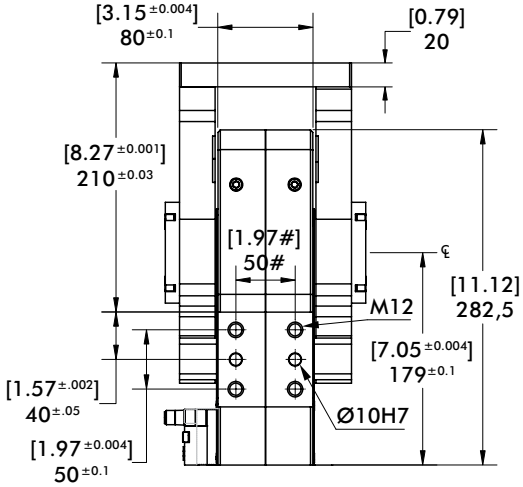

Tolerance for dowel holes : ± 0,02 [0.0008]
Tolerance for screw holes : ± 0,1 [0.004]

RCM/RFM100 Horizontal "O/LS" Orientation Pivot Dimensions

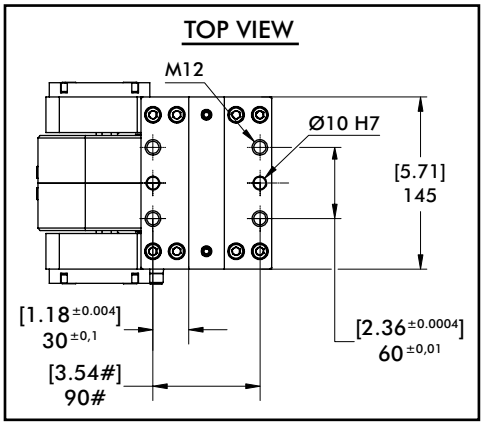

Tolerance for dowel holes : ± 0,02 [0.0008]
Tolerance for screw holes : ± 0,1 [0.004]

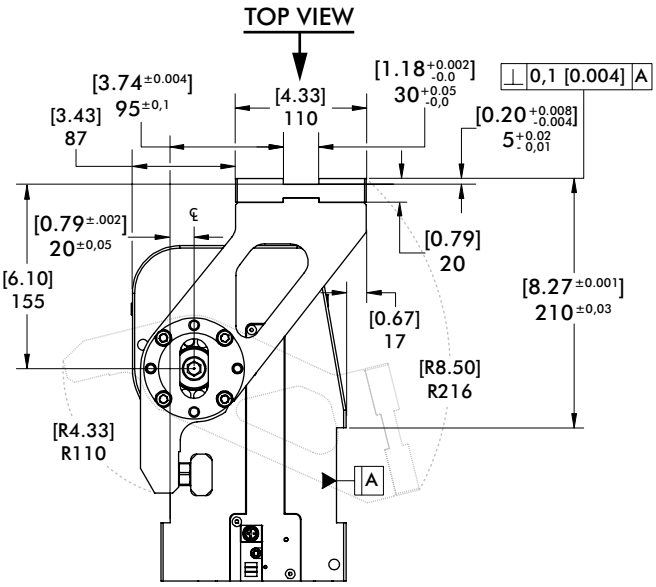



Saddle Arm Weight: [27.69 lbs] 12.56 Kg

mm [INCH]

THIRD ANGLE PROJECTION

RCM/RFM

Pneumatic Pivot Units | Dimensions

RCM/RFM125, 160, 200 Vertical "V" Orientation Pivot Unit and Saddle Dimensions

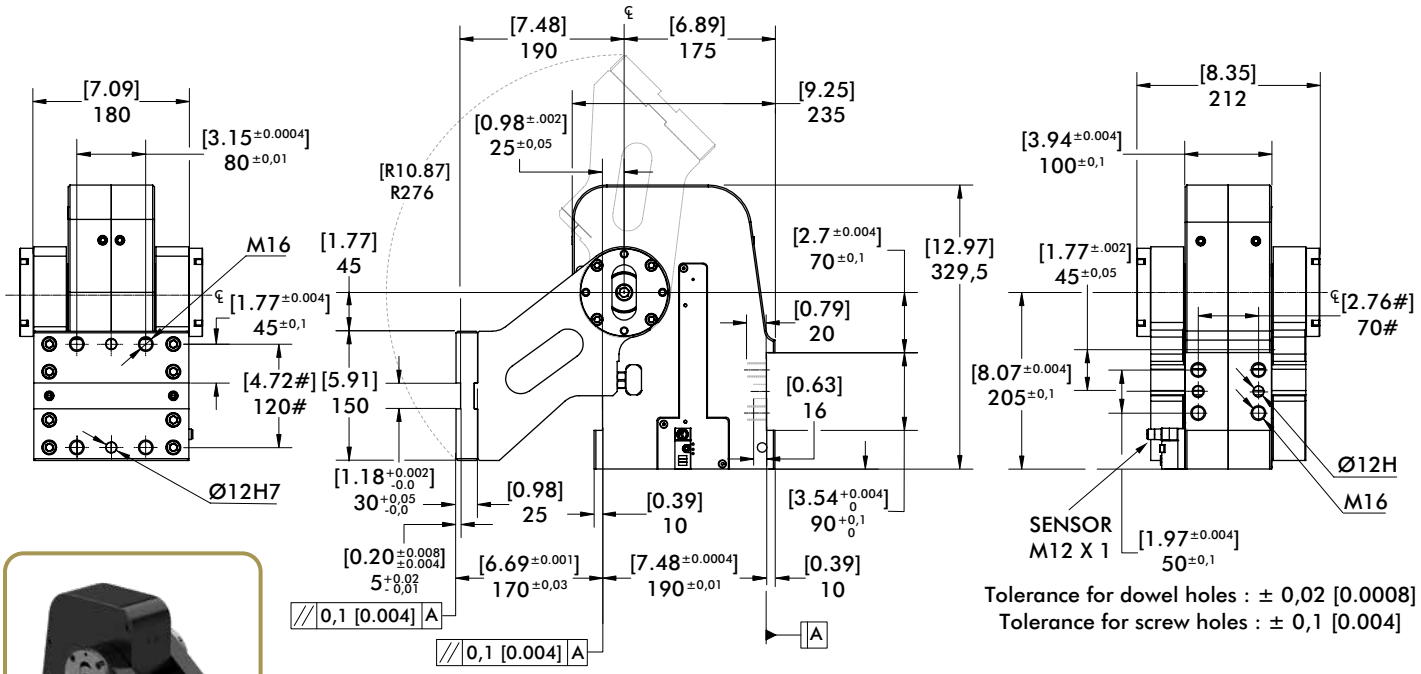

Tolerance for dowel holes : ± 0,02 [0.0008]
Tolerance for screw holes : ± 0,1 [0.004]

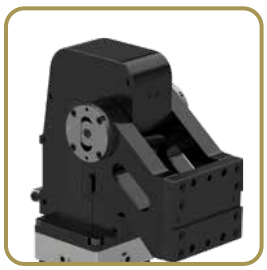

Saddle Arm Weight: [52.21 lbs] 23.68 Kg

mm [INCH]
THIRD ANGLE PROJECTION

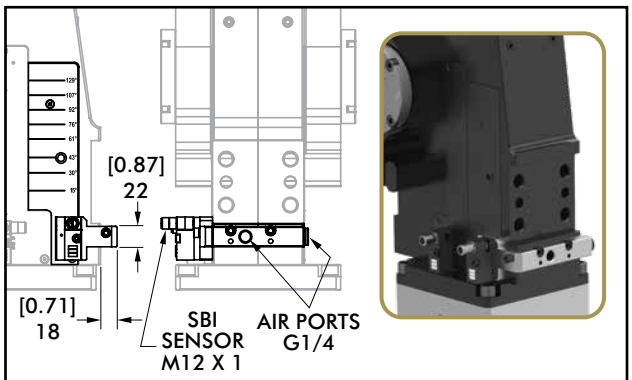

RFM SBI Sensor Unit Dimensions

RCM/RFM125, 160, 200 Vertical "V/LS" Orientation Saddle Dimensions



Saddle Arm Weight: [55.23 lbs] 25.05 Kg

mm [INCH]
THIRD ANGLE PROJECTION

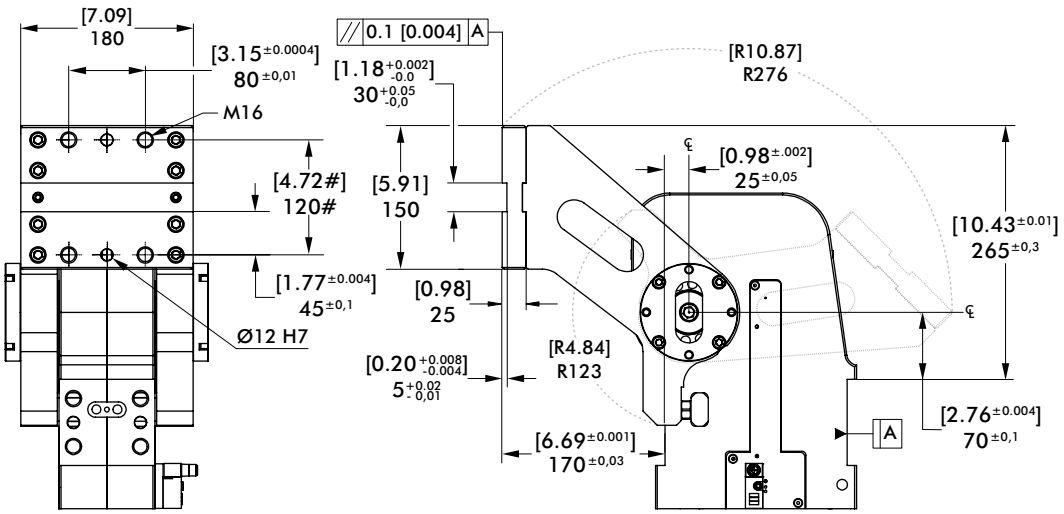

Tolerance for dowel holes : ± 0,02 [0.0008]
Tolerance for screw holes : ± 0,1 [0.004]

RCM/RFM125, 160, 200 Horizontal "O" Orientation Pivot Unit and Saddle Dimensions

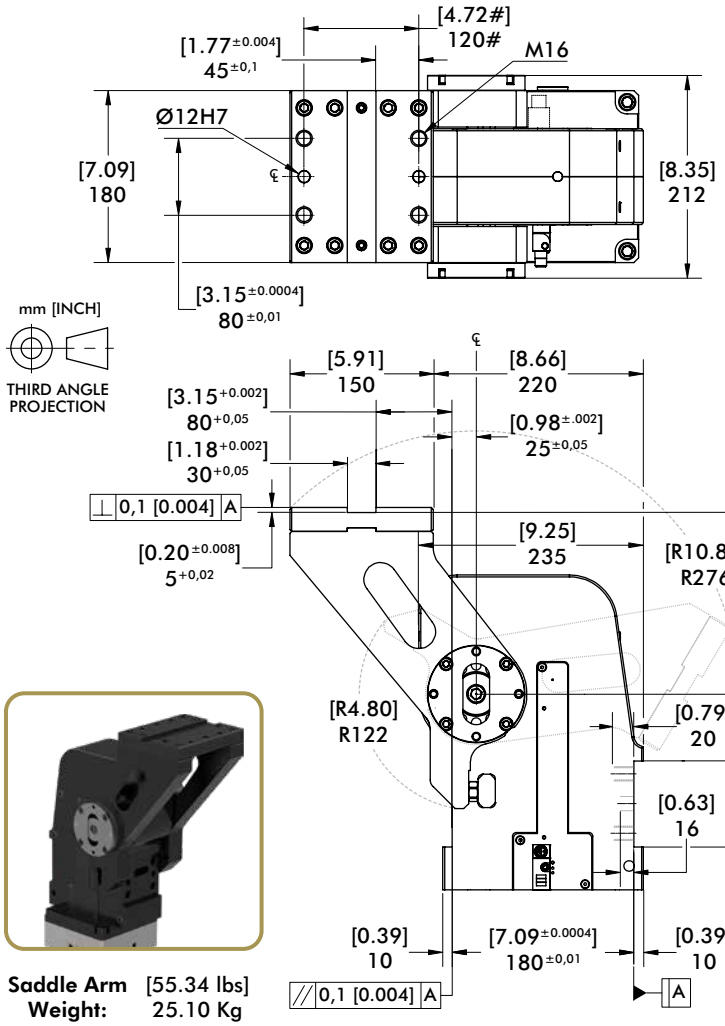

Saddle Arm Weight: [55.34 lbs] 25.10 Kg

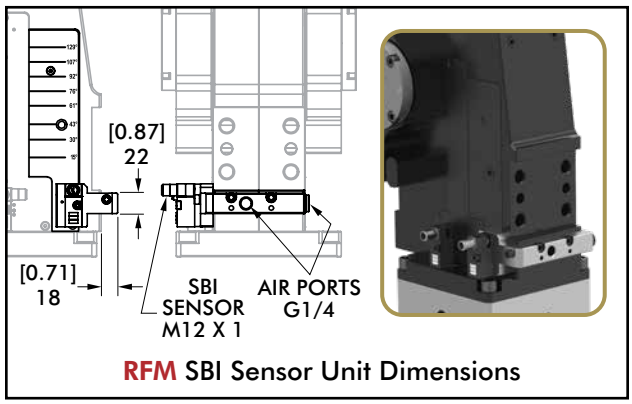

RFM SBI Sensor Unit Dimensions

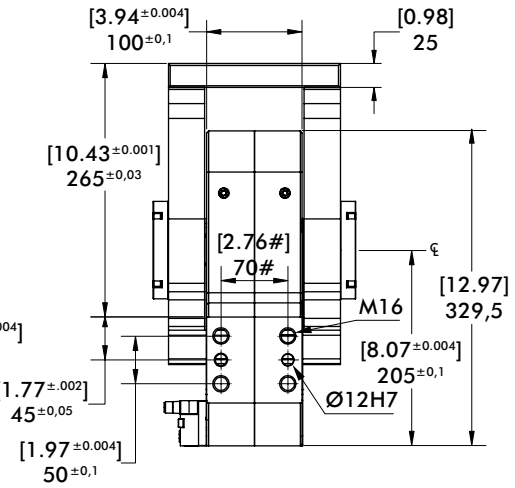

Tolerance for dowel holes : ± 0,02 [0.0008]
Tolerance for screw holes : ± 0,1 [0.004]

RCM/RFM125, 160, 200 Horizontal "O/LS" Orientation Saddle Dimensions

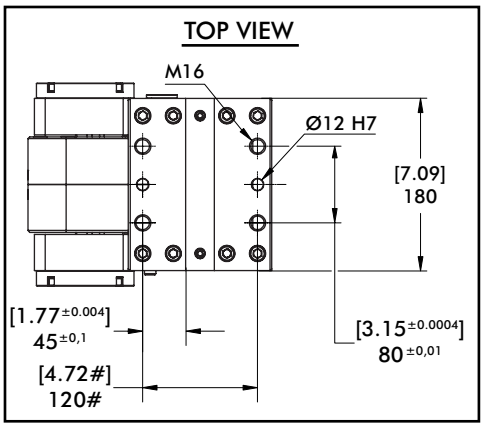

Tolerance for dowel holes : ± 0,02 [0.0008]
Tolerance for screw holes : ± 0,1 [0.004]

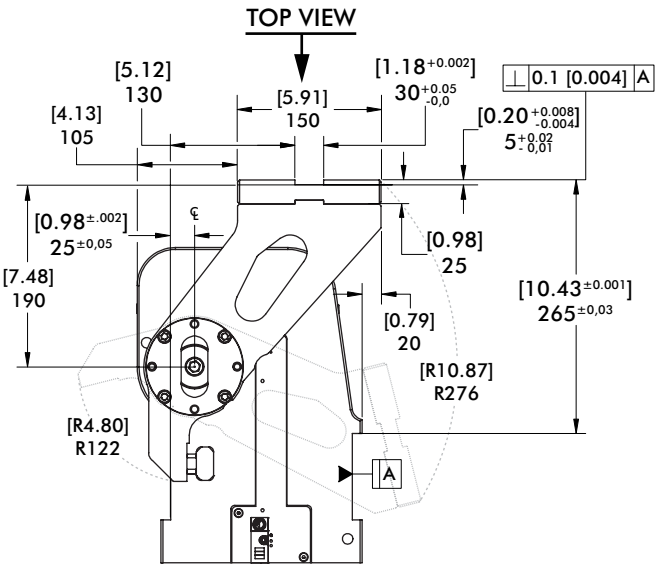



Saddle Arm Weight: [54.39 lbs] 24.67 Kg

mm [INCH]
THIRD ANGLE PROJECTION

RCM/RFM

Pneumatic Pivot Units | Cylinder Dimensions

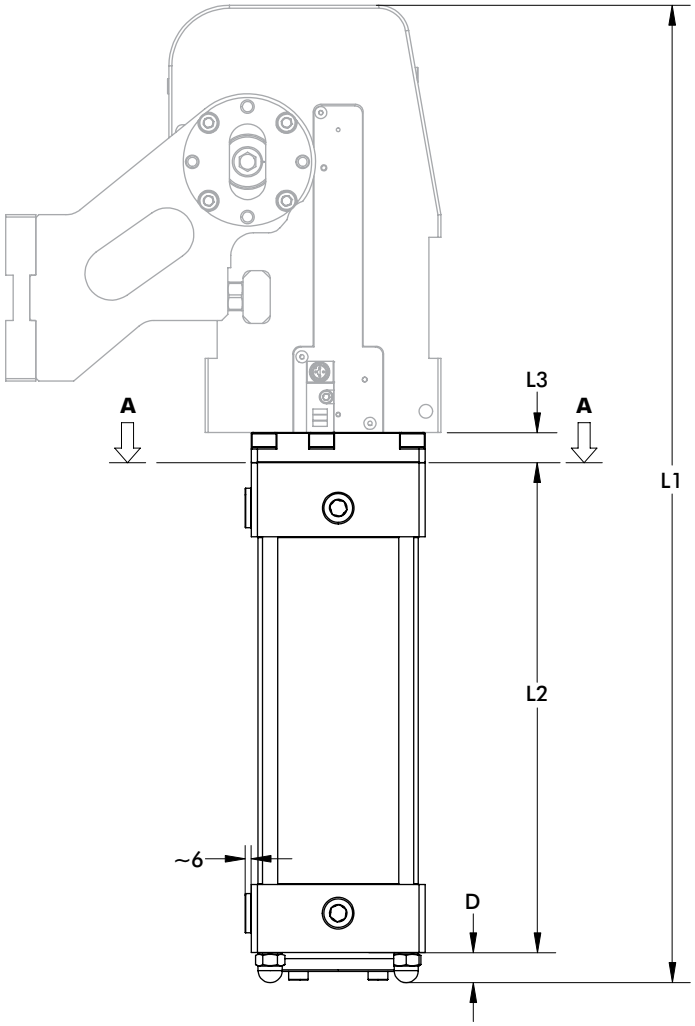

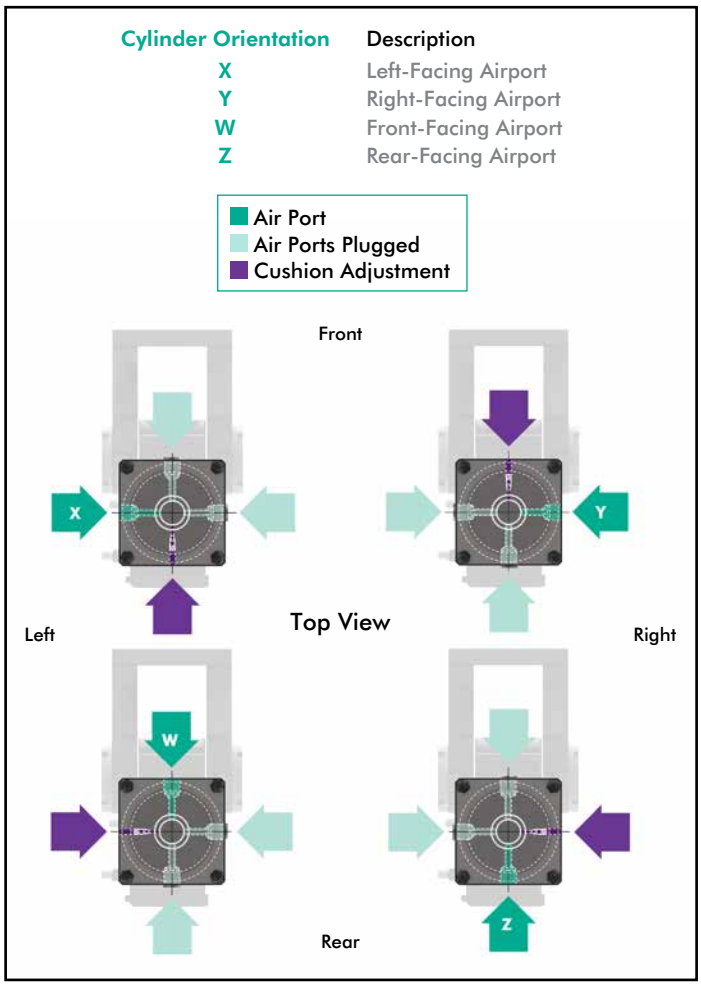

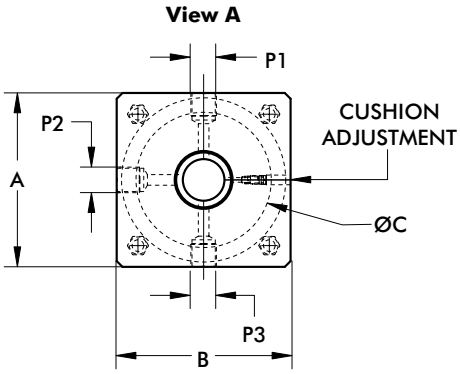

For Models	A	B	C	D	L1	L2	L3	P1-P3
RCM/RFM100.2	[4.53] 115	[4.53] 115	[3.94] 100	[0.75] 19	[25.41] 645,5	[12.76] 324	[0.79] 20	[1/2NPT] G1/2
RCM/RFM125.2	[6.30] 160	[6.30] 160	[4.92] 125	[0.91] 23	[29.17] 741	[14.35] 364,5	[0.94] 24	
RCM/RFM160.2	[7.09] 180	[7.09] 180	[6.30] 160		[29.55] 750,5	[14.59] 370,5	[1.08] 27,5	[3/4NPT] G3/4
RCM/RFM200.2	[8.66] 220	[8.66] 220	[7.87] 200	[0.75] 19	[29.70] 754,5	[14.82] 376,5	[1.16] 29,5	

Loading Capacity



Model	Max. Torque by Load Nm [in-lb]								
	Opening Angle ≤ 92°			Opening Angle > 92° / ≤ 121°			Opening Angle > 121°		
	4 bar [58 psi]	5 bar [72 psi]	6 bar [87 psi]	4 bar [58 psi]	5 bar [72 psi]	6 bar [87 psi]	4 bar [58 psi]	5 bar [72 psi]	6 bar [87 psi]
RCM/RFM100.2	120	150	190	90	110	130	45	55	65
RCM/RFM125.2	180	240	290	140	180	210	55	65	80
RCM/RFM160.2	320	410	500	260	300	360	85	100	125
RCM/RFM200.2	510	660	800	380	480	570	130	175	210

Side Loading Capacity

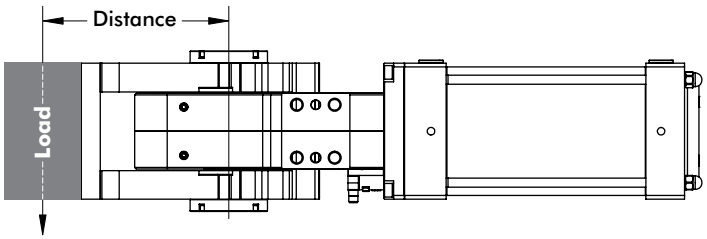

Max. applicable load with swivel unit positioned on its side (6 bar [87 psi])

Models	Max. Torque by Load @ 6 bar [87 psi] Nm [in-lb]
RCM/RFM100.2	[23] 80
RCM/RFM125.2	
RCM/RFM160.2	[9] 200
RCM/RFM200.2	

Angular Speed Limitation

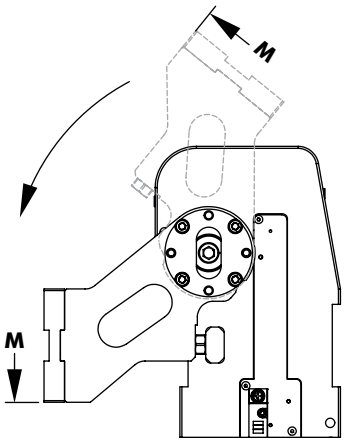

To avoid elevated angular speed it's necessary to respect the min. times among the electric signal of opening and that of closing brought in tab.

If don't respect the value report in tab, the device may break.

Model	Least Time Between Opening Electric Signal & Closing (Seconds) @ 6 bar [87 psi]				
	45°	76°	91°	121°	129°
RCM/RFM100.2	0.6	0.9	1.0	1.2	1.5
RCM/RFM125.2	0.8	1.1	1.2	1.4	1.7
RCM/RFM160.2	0.9	1.2	1.3	1.5	1.8
RCM/RFM200.2	1.4	1.7	1.8	2.1	2.5

RCM/RFM

Pneumatic Pivot Units | Time Diagrams

Closing Operation

Working Pressure: 5 bar [72 psi]
Arm Type: O (shown)
Swivel Unit Position: Vertical (shown)

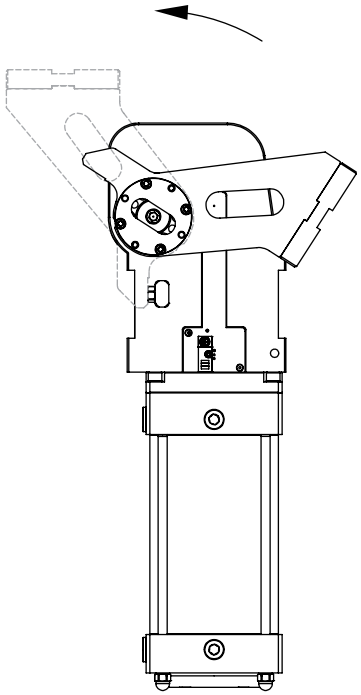

RFM/RCM100.2

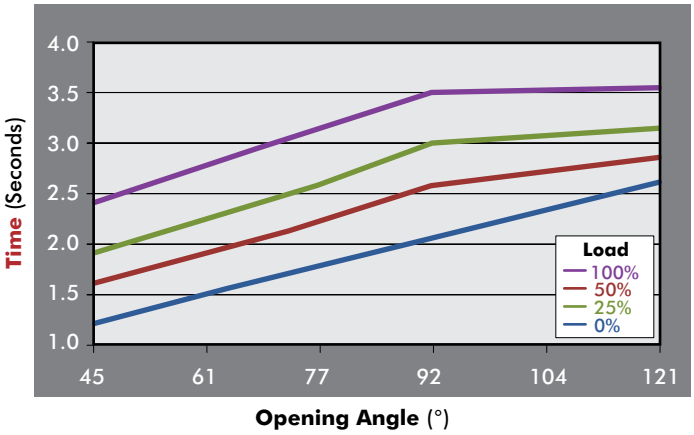

RFM/RCM125.2

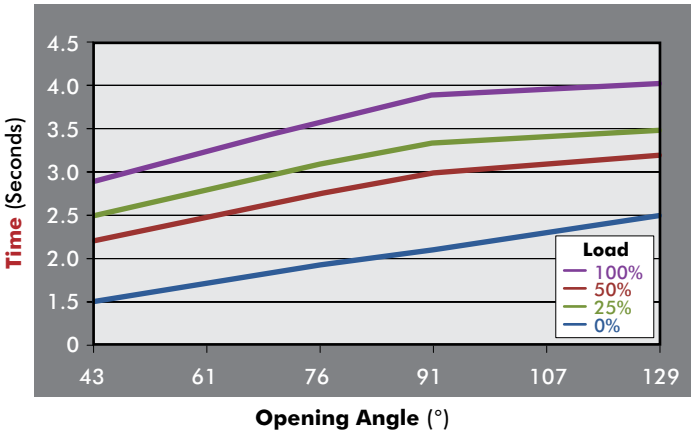

RFM/RCM160.2

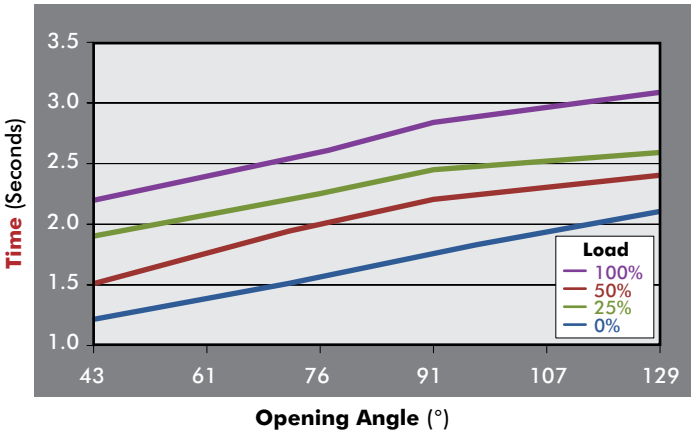

RFM/RCM200.2

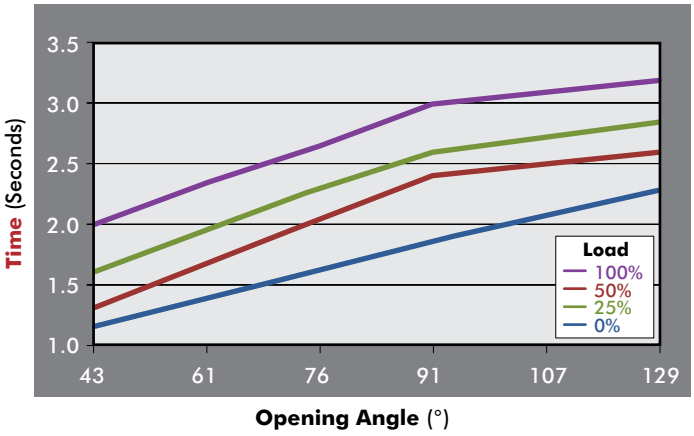

Dimensions and technical information are subject to change without notice

Opening Operation

Working Pressure: 5 bar [72 psi]
Arm Type: O (shown)
Swivel Unit Position: Vertical (shown)

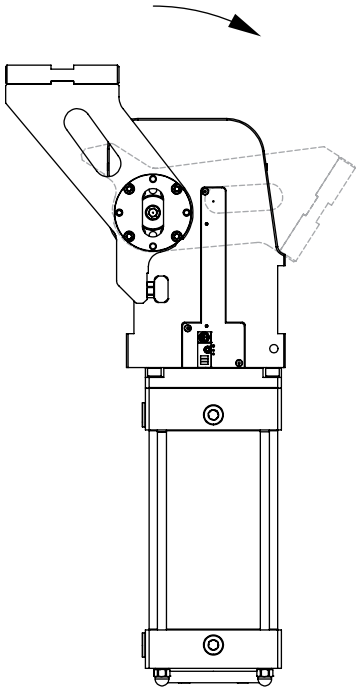

RFM/RCM100.2

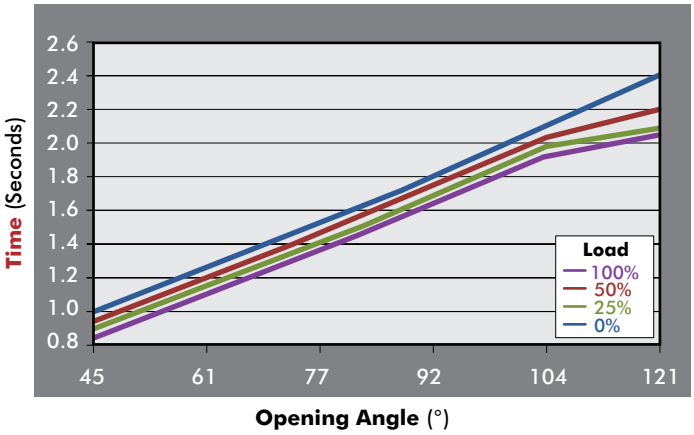

RFM/RCM125.2

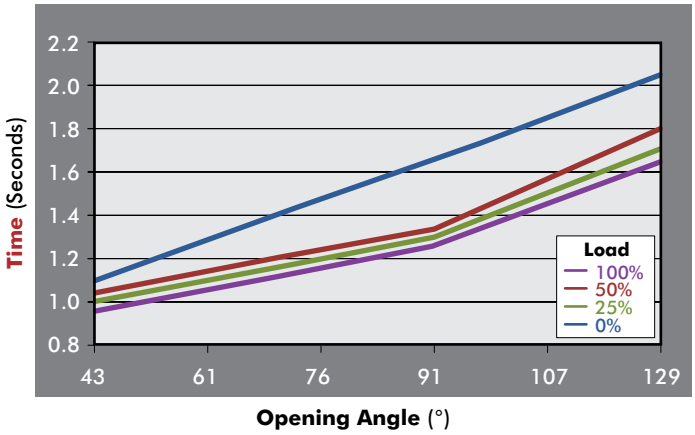

RFM/RCM160.2

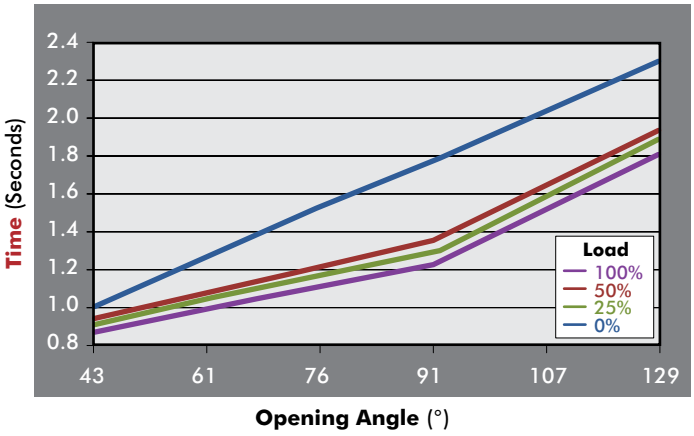

RFM/RCM200.2

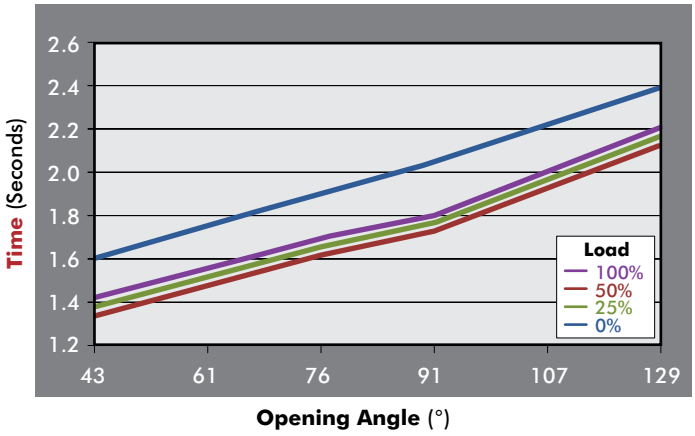

RCM/RFM

Pneumatic Pivot Units | Sensor Technical Specifications

Open/Close Sensor

Proximity Switch Type:* Pepperl+Fuchs
Feeding Voltage: 10-30 VDC
Max. Commutating Current: 200 mA
Power Supply: < 20mA
Voltage Drop: < 2 V
Temperature Range: -25° / 70° C



Pepperl+Fuchs

Pepperl+Fuchs

for Model	Power Amplifer (1)	Sensor's Satellite (2)	Complete Inductive Switch
RCM/RFM100.2	3/413	3/417	RFMSI – 1.2/A
RCM/RFM125.2			RFMSI – 125.2/A
RCM/RFM160.2			RFMSI – 160.2/A
RCM/RFM200.2			RFMSI – 200.2/A

S01 = Opening Signal
S02 = Closing signal
Y = Yellow LED
G = Green LED
R = Red LED
1 = Brown Wire
2 = Black Wire
3 = Blue Wire
4 = White Wire

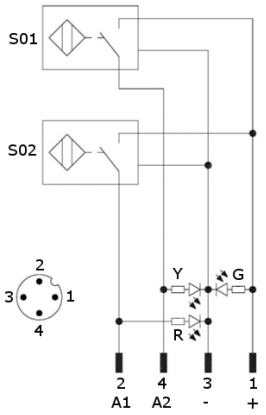

Integrated Locking Sensor (SBI)

Locking Sensor Type:* Pepperl+Fuchs
Output Type: PNP
Feeding Voltage: 10-30 VDC
Max. Commutating Current: 200 mA
Power Supply: < 25mA
Voltage Drop: < 2 V
Temperature Range: -25° / 70° C



Pepperl+Fuchs

Pepperl+Fuchs

for Model	Sensor Type
RFM100.2	RF1 – BIF
RFM125.2	
RFM160.2	RF2 – BIF
RFM200.2	

S01 = Opening Signal
Y = Yellow LED
G = Green LED
1 = Brown Wire
3 = Blue Wire
4 = White Wire

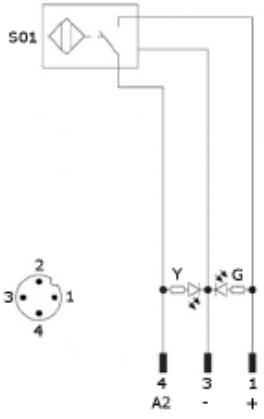

*Proximity switch and locking sensor types cannot be mixed.

Pneumatic Control Diagrams

Control Valve: 5/3
Pressure Range: 4-8 bar [58-116 psi]

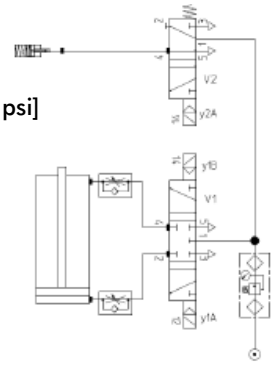

Control Valve: 5/2
Pressure Range: 4-8 bar [58-116 p

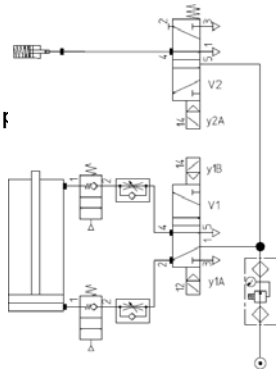

Air Consumption

Model	Opening Angle (°)	Air consumption @ 5 bar [72 psi] litre [ft3]	Air Consumption @ 6 bar [87 psi] litre [ft3]
RCM/RFM100.2	29°	5,9 [167]	6,9 [195]
	77°	10,3 [292]	12,1 [343]
	121°	14,3 [405]	16,7 [473]
RCM/RFM125.2	15°	7,9 [224]	9,2 [261]
	76°	18,0 [510]	21,0 [595]
	107°	22,4 [634]	26,2 [742]
	129°	24,7 [699]	28,8 [816]
RCM/RFM160.2	15°	14,2 [402]	16,6 [470]
	76°	31,0 [878]	36,2 [1025]
	107°	38,5 [1090]	44,9 [1271]
	129°	42,2 [1195]	49,3 [1396]
RCM/RFM200.2	15°	20,8 [589]	24,3 [688]
	76°	47,4 [1342]	55,3 [1566]
	107°	59,2 [1676]	69,1 [1957]
	129°	65,1 [1843]	76,0 [2152]

Shock Absorber, External Stop Guide Usage

Make sure that the swivel unit makes the complete stroke until the closing position is reached (0°). Any interference with external bodies can cause serious damage to the device and to the equipment mounted on it.

Note: The use of external stops and shock absorbers is not recommended as they can have negative effects on the life of the unit.

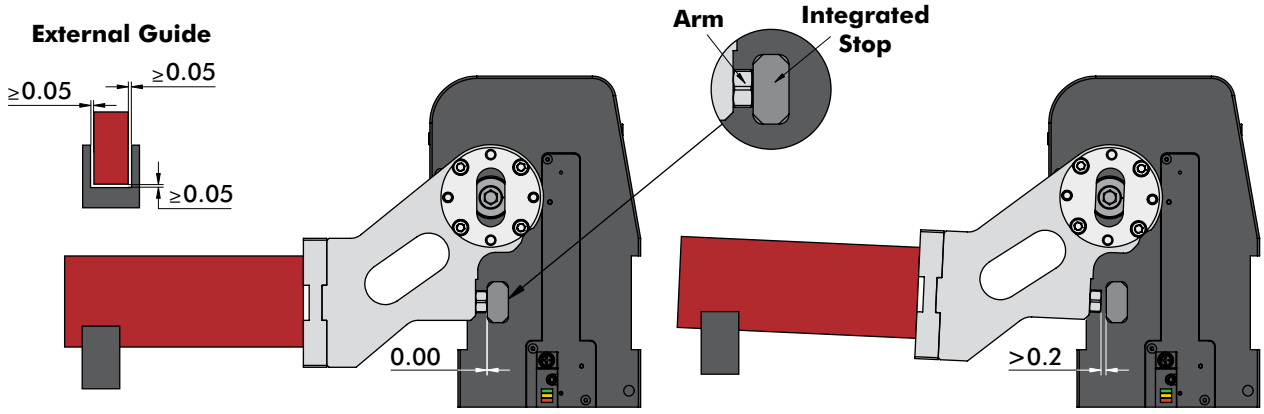

CORRECT USE: Integrated Stop is properly used. The distance between the arm and the Integrated Stop = [0.00] 0,00

INCORRECT USE: External Stop being used does not allow the arm to reach a 0° position. The distance between the arm and the Integrated Stop is greater than [0.008] 0,2

If External Guides are used, the following points must be guaranteed:

- The swivel unit must fully reach the closed position
- The above measures for External Guides must be maintained
- They must not be used as External Stops

If the points indicated above are not followed, we reserve the right to void the warranty.

SIZING AND APPPLICATION CHART

Tool Changers

Manual Tool Changer

See Page TC-TC1-1



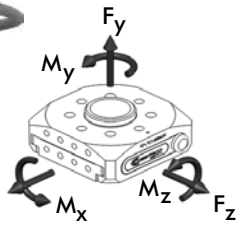

Specifications:		TC1
Max. Payload:	Kg [lb]	10 [22]
Coupled Weight:	Kg [lb]	0.33 [0.73]
Max Moment (My, Mz, Mx)	Nm [in-lb]	100 [885]
Max Force (Fy, Fz)	N [lbf]	1000 [225]
Max Force (Fx)	N [lbf]	100 [22.5]

Automatic Tool Changers



		Max Moment Kg [lb]								Max Payload Kg [lb]					Weight Kg [lb]					Features				
Series	Page-TC-#	0 to 50 [0 to 110]	50 to 100 [110 to 220]	100 to 500 [220 to 1100]	500 to 1000 [1100 to 2200]	1000 to 2000 [2200 to 4400]	2000 to 3000 [4400 to 6600]	3000 to 4000 [6600 to 8800]	4000+ [9120+]	0 to 50 [0 to 110]	50 to 100 [110 to 220]	100 to 500 [220 to 1100]	500 to 1000 [1100 to 2200]	1000+ [2280+]	0 to 2 [0 to 4.4]	2 to 4 [4.4 to 8.8]	4 to 6 [8.8 to 13.2]	6 to 8 [13.2 to 17.6]	8+ [17.6+]	Optional Modules	High Temperature	Round Design	Rectangular Design	Failsafe Locking
RQC/RTP-200	RQTP-3				●						●					●				✓			✓	✓
RQC/RTP-400	RQTP-7					●						●					●			✓			✓	✓
RQC/RTP-800	RQTP-7						●					●						●		✓			✓	✓
RQC/RTP-1200	RQTP-7							●					●						●	✓			✓	✓
RQC/RTP-2400	RQTP-13								●					●					●	✓			✓	✓
QC/TP-30	QCTP-5	●								●					●							✓		✓
QC/TP-60	QCTP-7		●							●					●					✓		✓		✓
QC/TP-60-10	QCTP-9		●							●					●							✓		✓
QC/TP-150	QCTP-11			●							●					●				✓		✓		✓
RHC-1	RHC-3	●								●					●						✓	✓		✓
RHC-2	RHC-5			●							●				●						✓	✓		✓
RHC-3	RHC-7				●							●				●					✓	✓		✓
RHC-4	RHC-9					●						●						●			✓	✓		✓

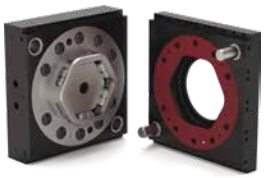





Technical Information

Pneumatic Specification

Pressure Range (Locked Cylinder):
3~7 bar [40~100 psi] (QC/TP, RHC Series)
4~7 bar [60~100 psi] (RQC/RTP Series)
Cylinder Type: Double Acting, Spring Assist
Valve Required to Actuate:
3-way, 2-position (QC-30 only)
4-way, 2-Position

Air Quality Requirements

Air Filtration: 40 Microns or Better
Air Lubrication: Not Necessary*
Air Humidity: Low Moisture Content (Dry)
(*)Addition of lubrication will greatly increase service life.

Temperature Operating Range

Buna-N-Seals: -35°~80° C [-30°~180° F] (All Models)
Viton® Seals: -30°~150° C [-20°~300° F] (RHC Series)

Maintenance Specification

Expected Life: *Normal Application:* 5 Million Cycles
With Preventative Maintenance: 10+ Million Cycles
Repeatability: ±0.025mm [±0.001 in]
Field Repairable: Yes
Seal Repair Kits Available: Yes

Application Restrictions

- Dirty or Gritty Environments
- Machining Operations Generating Chips
- Environments with Loose Particulates

Dimensions and technical information are subject to change without notice

SIZING AND APPPLICATION CHART

Cylindrical Horizontal Compliance Device



Series	Page-TC-#	Max Centering Force Kg [lb]						Max Payload Kg [lb]				Weight Kg [lb]				Misalignment ±mm [±in]					Features			
		0 to 500 [0 to 1100]	500 to 1000 [1100 to 2200]	1000 to 2000 [2200 to 4400]	2000 to 3000 [4400 to 6600]	3000 to 4000 [6600 to 8800]	4000+ [9120+]	0 to 5 [0 to 110]	5 to 10 [110 to 220]	10 to 20 [220 to 1100]	20 to 40 [1100 to 2200]	0 to 1 [0 to 4.4]	1 to 2 [4.4 to 8.8]	2 to 4 [8.8 to 13.2]	4+ [17.6+]	3 [0.12]	5 [0.20]	6.5 [0.25]	8 [0.31]	12 [0.47]	Custom Misalignment	Optional Spring Assist	Harsh Environments	Field Repairable
CH-50-P	CH-3	●						●				●				●					✓	✓	✓	✓
CH-80-P	CH-4		●						●			●					●				✓	✓	✓	✓
CH-110-P	CH-5			●						●				●				●			✓	✓	✓	✓
CH-140-P	CH-6					●					●				●				●		✓	✓	✓	✓
CH-165-P	CH-7						●				●				●					●	✓	✓	✓	✓



Technical Information

Pneumatic Specification

Pressure Range (w/o springs): 2-7 bar [30-100 psi]
Pressure Range (w/springs CH-50): 3-7 bar [43-100 psi]
Pressure Range (w/springs): 4-7 bar [60-100 psi]
Cylinder Type: Double Acting, Double Acting Spring Assist, or Single Acting Spring Return
Dynamic Seals: Internally Lubricated Buna-N
Valve Required to Actuate: *Double Acting:* 4-way, 2-Position; *Single Acting (**-RL** or **-RA** Option):* 3-way, 2-Position

Air Quality Requirements

Air Filtration: 40 Microns or Better
Air Lubrication: Not Necessary*
Air Humidity: Low Moisture Content (Dry)
(*)Addition of lubrication will greatly increase service life.

Temperature Operating Range

Buna-N-Seals (Standard): -25°~80° C [-10°~180° F]

Maintenance Specification

Expected Life: *Normal Application:* 5 Million Cycles
With Preventative Maintenance: 6+ Million Cycles
Field Repairable: Yes
Seal Repair Kits Available: Yes

ROBOTIC TOOLING SOLUTIONS

Automatic Tool Changer Sizing Guide

For tool changer sizing, the maximum effective moment during displacement will be considered. The effective moment will be calculate in the worst case of the application, and must consider:

- The weight of the tool
- The position of the center of gravity
- The dynamic effect due to the maximum acceleration or deceleration. (Emergency stop for example)

See below the simplified calculation formula to estimate the effective moment of your application.

Required Information		
M	Mass of the tool attached on the tool changer	**Kg**
L	Distance from the payload center of gravity to the tool changer	**m**
α	Maximum acceleration or deceleration of the robot	**g**

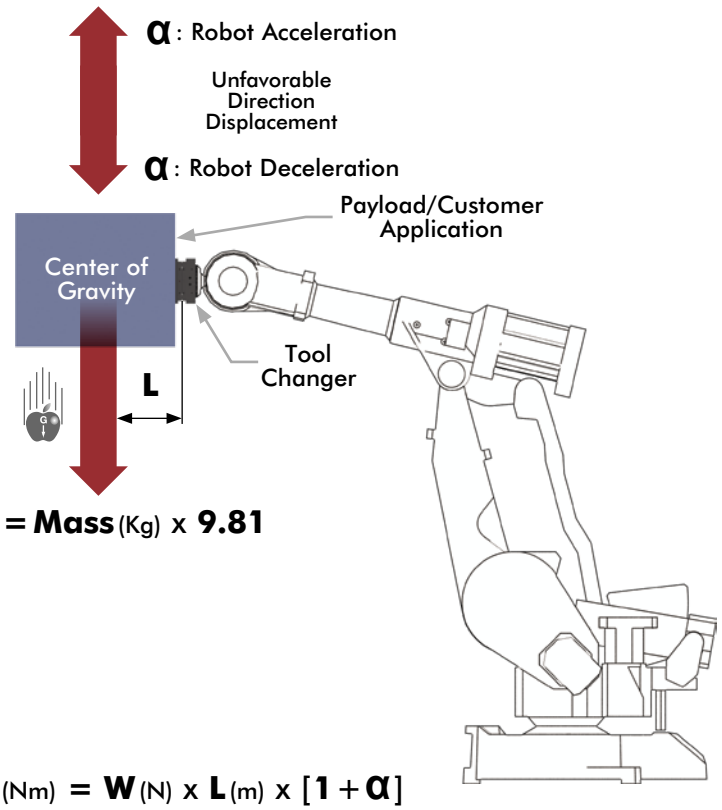

W (N) = **Mass** (Kg) x **9.81**

Effective Moment ➡ **Mt eff** (Nm) = **W** (N) x **L** (m) x [**1** + **α**]

CAUTION: **Applications with high and wide loads:** in case of heavy application, we strongly recommend to strengthen the cylindrical and diamond indexing pins, between tool changer and tool plate, by adding larger diameter pins, the farthest to the center of changer tool, incorporated into the design of the tooling.

Application Example

Application Data	
Mass of tool	90 kg
Center of gravity / Tool Changer	0.5 m
Acceleration (or deceleration) of displacement	2 g

Mt eff = (90 x 9.81) x 0.5 x (1+2)

Mt eff = 883 x 0.5 x 3

Mt eff = 1324.5 Nm

Loading Capacity:

Max. Tensile **T**: 2670 N [600 lb]

Max. Compressive **C**: 3560 N [800 lb]

Max. Moment (**Mx**/**My**/**Mz**) 1580 Nm [14000 in-lb]

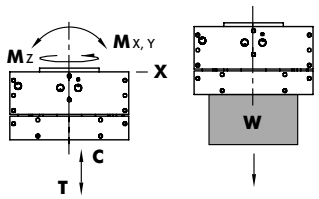

The obtained value 1324.5 Nm should be compared to the technical data of our products in this catalog in the ''loading capacity information'' section. For this application, the choice will be a RQC-400M tool changer that has a qualifying capacity, in terms of torque, of 1580Nm, over than the 1325Nm of the application.

Destaco offers custom and standard Docking Stations to fit customers needs. Please contact Destaco Sales for more information.

Key Features:

- Allows for quick changing of tooling
- Reducing machine down-time
- Safely stores tooling when not in use
- Standard or custom stations

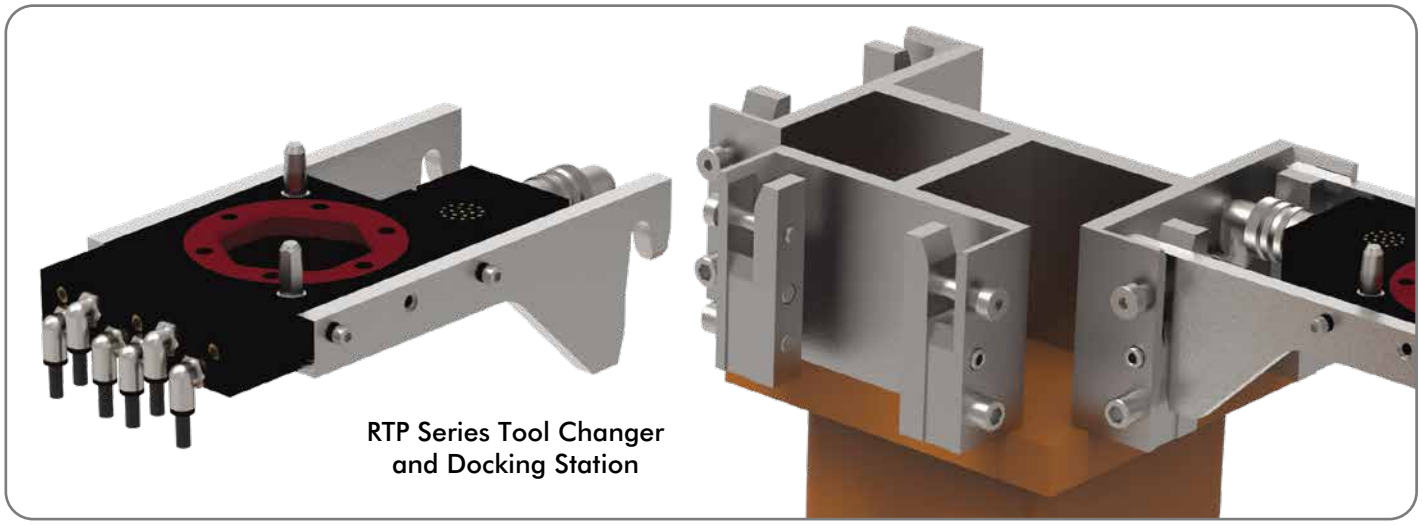

RTP Series Tool Changer and Docking Station

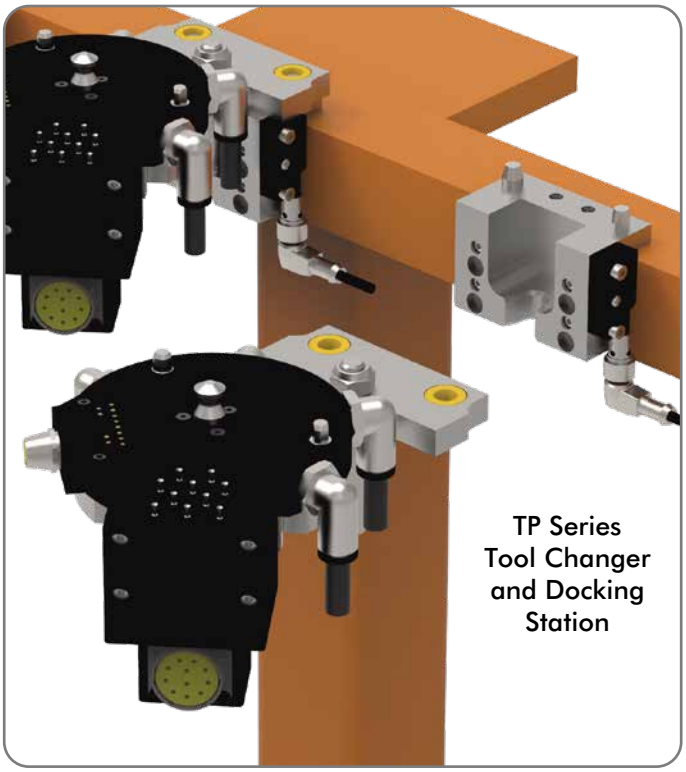

TP Series Tool Changer and Docking Station

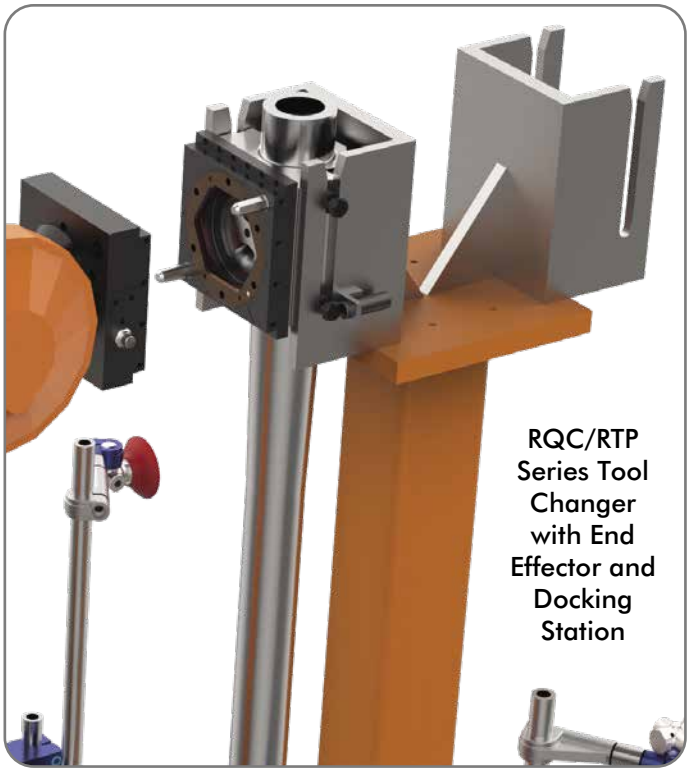

RQC/RTP Series Tool Changer with End Effector and Docking Station

RQC/RTP SERIES

Automatic Tool Changers | Features and Benefits

Robotic applications:
Perfect for those flexible/multiple tooling applications utilizing one Robot. This product was designed with exceptional repeatability, high rigidity & load capacity to make it ideal for any robotic application.

Automation applications:
End effector tooling and interchangeable fixturing can be changed quickly and easily to accommodate many different styles of parts on the same assembly machine or machining center.

Highly configurable, modular design (RQC/RTP):
The Modular RQC series easily accommodates up to (4) optional modular interfaces, offering a high level of flexibility.

Additional Optional Air, Fluid, Electrical Modules are Available.
Air and fluid ports modules are available in NPT, BSPP, and BSPT
(See Page TC-RQTP-17)

Optional 19 Pin I/O Module
Spring loaded contacts are recessed for a better protection

V-Seal provides moisture resistance

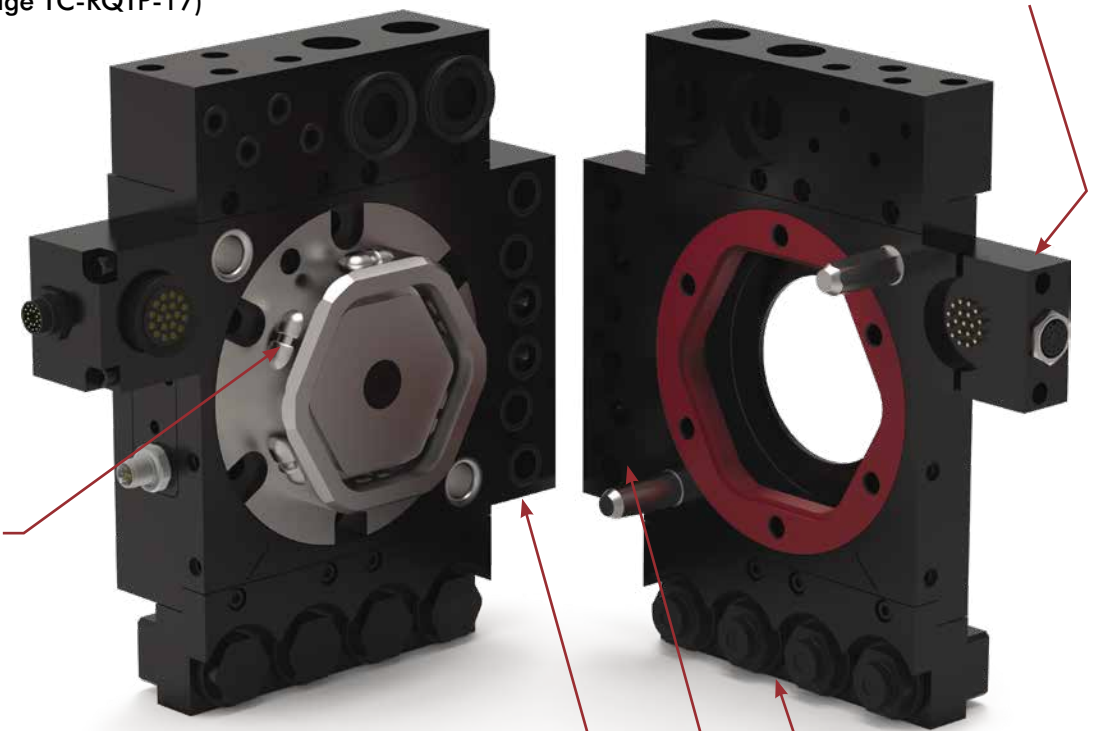

Locking Mechanisms
Made from hardened stainless steel, they provide a low stress, highly rigid locking capability

Latch/Unlatch Switch
RQC's are pre-equipped for latch, unlatch (all sizes) and part presence sensing (sizes 800 & 1200 only)

Dry contact or inductive sensors with or w/o connectors are available

Optional 6 Port Pneumatic Module

Locating Pins

Optional (4) Self-Sealing Fluid Module
(sizes 800, 1200 & 2400 only)

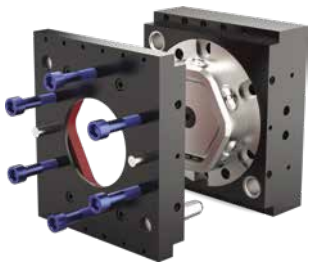

Tool Plate
has tapped holes, two dowel pin holes for accurate location of payload, and features a ISO9409-1 mounting pattern

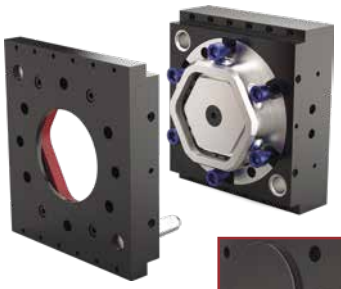

Robot Plate
has counterbored holes for mounting with a dowel pin hole, a raised boss for location, and features a ISO9409-1 mounting pattern



Back Side of Robot Plate

Dimensions and technical information are subject to change without notice

RQC-200/RTP-200

Combined Weight: 3 Kg [6.7 lb]
Max. Payload: 90 Kg [200 lb]
Max. Moment: 810 Nm [7200 in-lb]

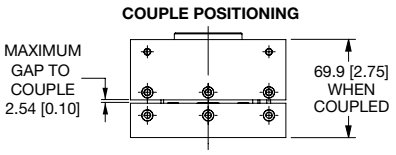



RQC-200 Robot Plate **RTP-200** Tool Plate

RQC-400/RTP-400

Combined Weight: 4.7 Kg [10.4 lb]
Max. Payload: 180 Kg [400 lb]
Max. Moment: 1580 Nm [14000 in-lb]

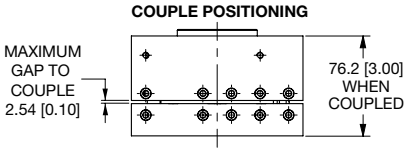

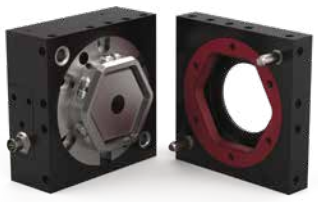

RQC-400 Robot Plate **RTP-400** Tool Plate

RQC-800/RTP-800

Combined Weight: 7.1 Kg [15.8 lb]
Max. Payload: 360 Kg [800 lb]
Max. Moment: 2490 Nm [22000 in-lb]

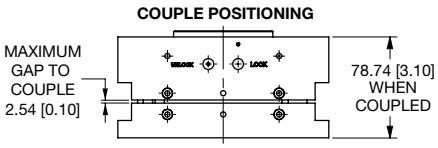



RQC-800 Robot Plate **RTP-800** Tool Plate

RQC-1200/RTP-1200

Combined Weight: 8.3 Kg [18.4 lb]
Max. Payload: 550 Kg [1200 lb]
Max. Moment: 3390 Nm [30000 in-lb]

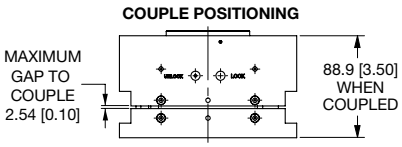



RQC-1200 Robot Plate **RTP-1200** Tool Plate

RQC-2400/RTP-2400

Combined Weight: 30 Kg [66.1 lb]
Max. Payload: 1089 Kg [2400 lb]
Max. Moment: 7000 Nm [61955 in-lb]

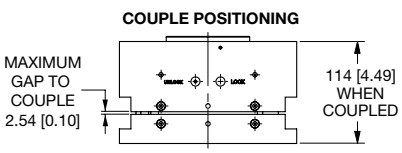



RQC-2400 Robot Plate **RTP-2400** Tool Plate

RQC-200/RTP-200

Automatic Tool Changers | Module Usage Illustrations

RQC-200
Robot Plate
with Optional Modules

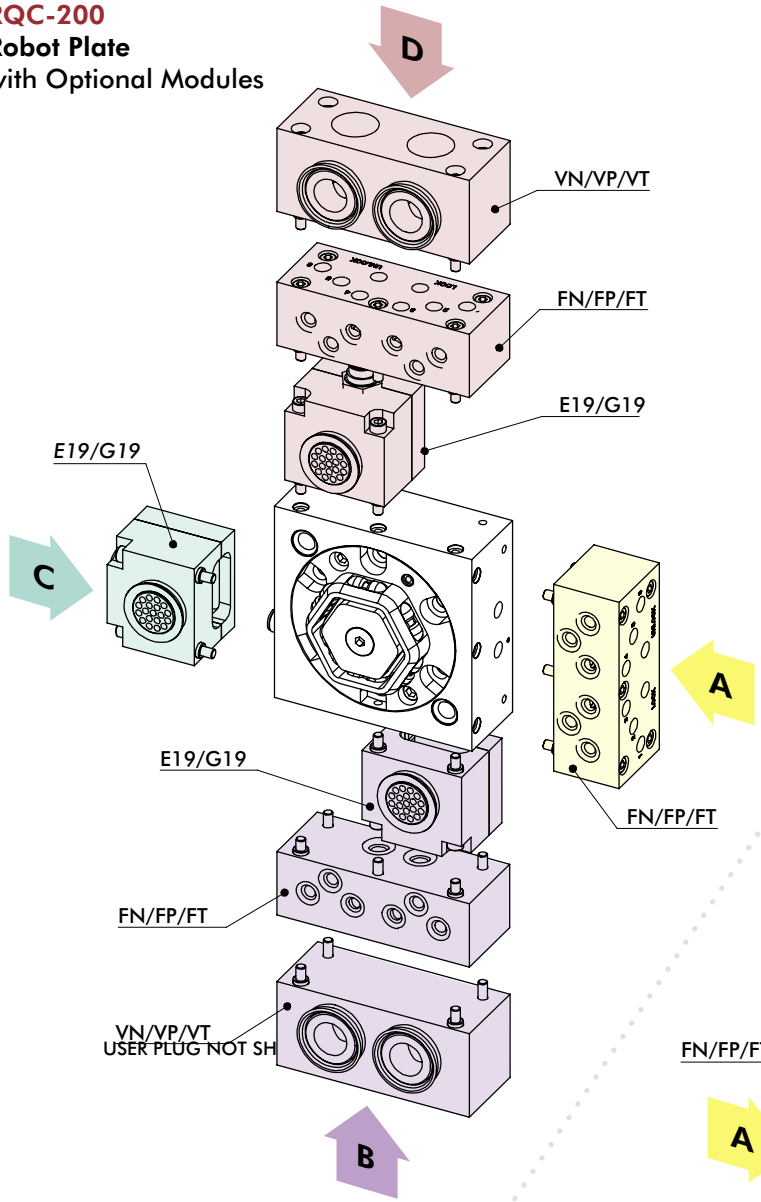

RTP-200
Tool Plate
with Optional Modules

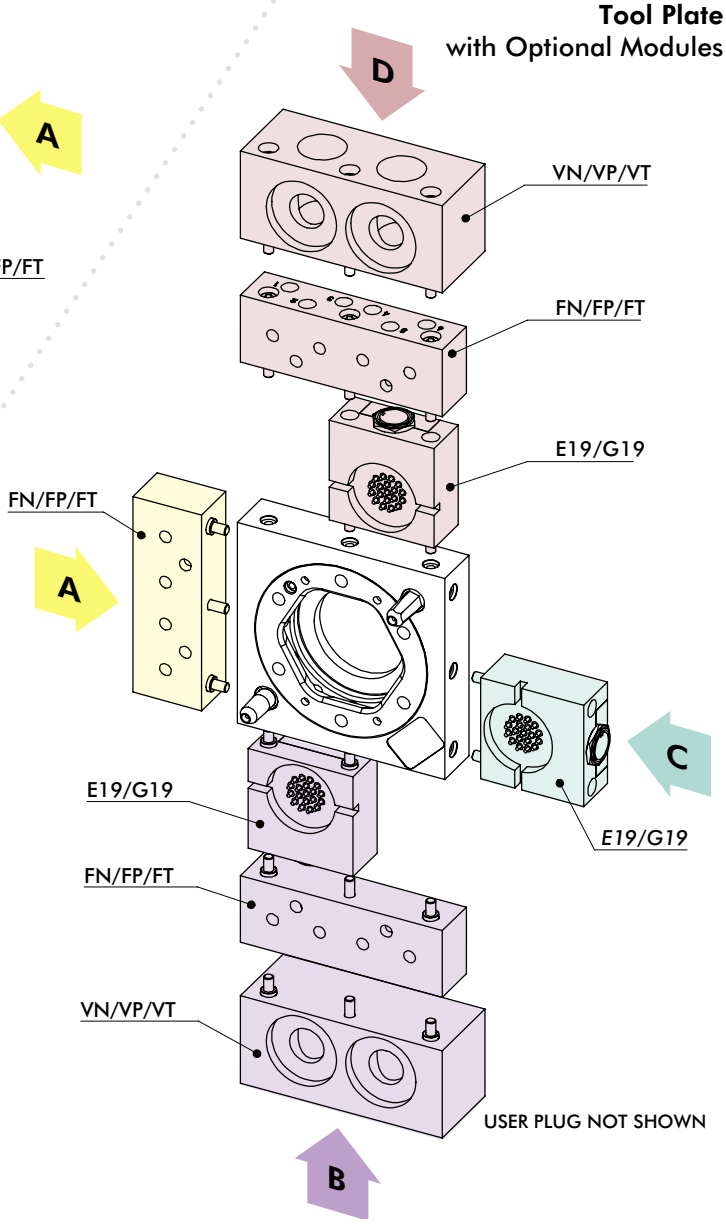

Dimensions and technical information are subject to change without notice



Robot Plate RQC-**200** Tool Plate RTP-**200**

Base Model	Model Size	Port Options (RQC-only)	Sensing (RQC-only)		Side A MODULES	Side B MODULES	Side C MODULES	Side D MODULES
RQC	200	N	L0	–	0	0	0	0

Base Model
- **RQC** Robot Plate
- **RTP** Tool Plate

Model Size
- **200** (See Page 8 for Specifications)

Port Options (RQC-only)
- **N** 1/8 NPT
- **M** 1/8 BSPP
- **A** 1/8 BSPT

Sensing (RQC-only)
- **L0** No Sensing
- **LP*** PNP Inductive Sensing
- **CP†** PNP Inductive Sensing with M12 connector
- **LN*** NPN Inductive Sensing
- **CN†** NPN Inductive Sensing with M12 connector
- **LD*** Dry contact sensor
- **CD†** Dry contact sensor with M12 connector

*Requires **E19** or **G19** module mounted on **Side C**.
†Cordset or plug are sold separately.

Optional Electrical, Air and Vacuum Modules can be ordered with Base Model

See below for Module Description

(See Pg. TC-RQTP-3 for Illustrated Module Config.)

Side A	Side B	Side C	Side D	Order Code	Optional Modules
●	●	●	●	0	No Module
	●	●	●	E19†	19 pin, 3 Amp, 48 VDC Module w/Turck M16 Conn, w/o Cordset
	●	●	●	G19	19 pin, 5 Amp, 120 VDC Module w/Industrial User Conn., w/o Cable
●	●		●	FN	6X 1/8" NPT Air Ports Module, Face Seal, 10 Bar
●	●		●	FP	6X 1/8" BSPP Air Ports Module, Face Seal, 10 Bar
●	●		●	FT	6X 1/8" BSPT Air Ports Module, Face Seal, 10 Bar
	●		●	VN	2X 3/4" Vacuum NPT Ports Module, Face Sealing
	●		●	VP	2X 3/4" Vacuum BSPP Ports Module, Face Sealing
	●		●	VT	2X 3/4" Vacuum BSPT Ports Module, Face Sealing

†Cordset or plug are sold separately.

NOTE: Only (1) module can be mounted per side. Modules usage is based on the size of the Base Model and which side the module can be mounted.

RQC-200 (ROBOT PLATE)

Automatic Tool Changers | Technical Specifications | Dimensions



Specification:
Max. Payload **W**: 90 Kg [200 lb]
Weight: 2 Kg [4.41 lb]
Cylinder Bore: Ø53mm [2.09in]
Displacement: 41.3 cm³ [2.52in³]

Loading Capacity:
Max. Tensile **T**: 1330 N [300 lb]
Max. Compressive **C**: 1780 N [400 lb]
Max. Moment (**Mx/My/Mz**): 810 Nm [7200 in-lb]

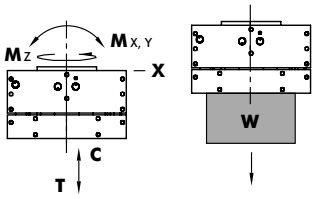

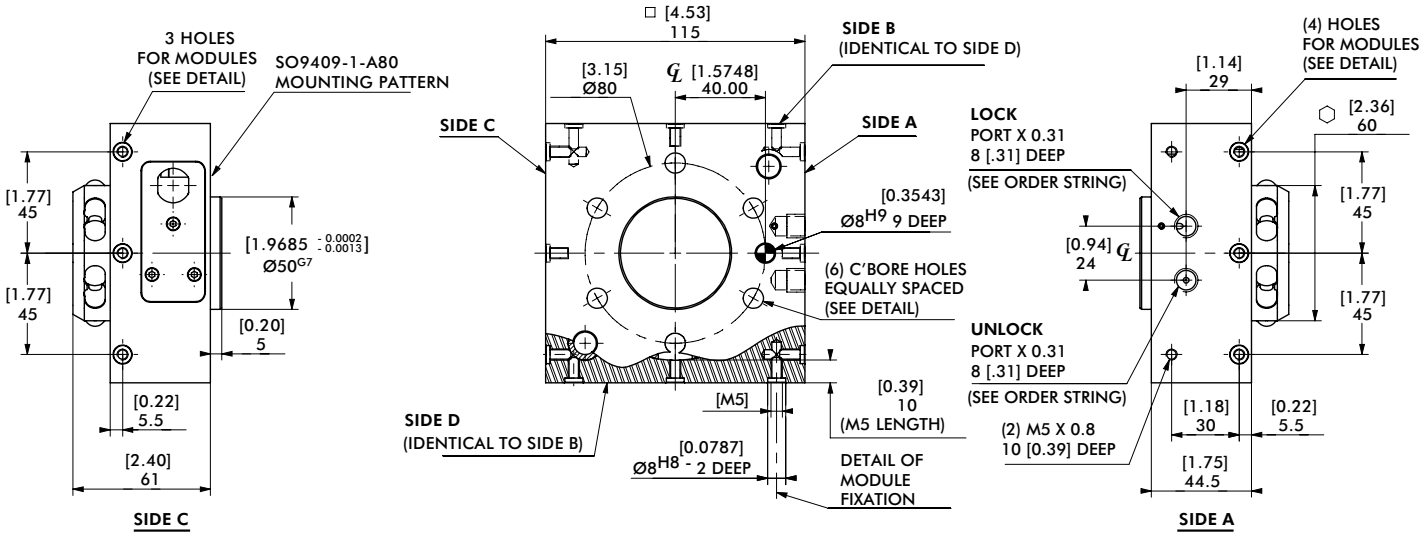

FAILSAFE OPERATION:
4-WAY VALVES WITH A SPRING RETURN ARE RECOMMENDED TO MAINTAIN AIR PRESSURE TO THE LOCK PORT DURING EMERGENCY STOP CONDITIONS.

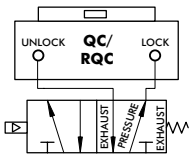

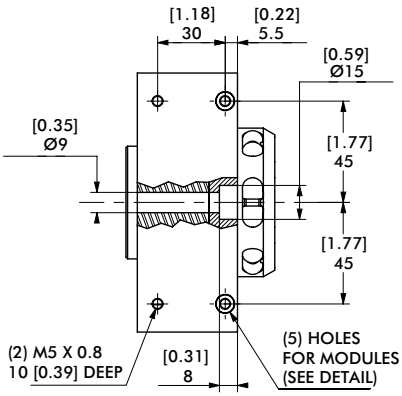

UNLESS OTHERWISE NOTED ALL TOLERANCES ARE AS SHOWN BELOW

DIMENSIONS ARE SYMMETRICAL ABOUT CENTERLINE	THIRD ANGLE PROJECTION	ALL DOWEL HOLES ARE SF (SLIP FIT). LOCATIONAL TOLERANCE ±.0005" OR [±.013MM]	METRIC THREADS COURSE PITCH	IMPERIAL ([IN.])	METRIC (MM)
				0.00 = ± .01 0.000 = ± .005 0.0000 = ± .0005	[0] = [± .25] [0.0] = [± .13] [0.00] = [± .013]

Dimensions and technical information are subject to change without notice

RTP-200 (TOOL PLATE)

Automatic Tool Changers | Technical Specifications | Dimensions

Specification:
Max. Payload **W**: 180 Kg [400 lb]
Weight: 1 Kg [2.2 lb]

Loading Capacity:
Max. Tensile **T**: 1330 N [300 lb]
Max. Compressive **C**: 1780 N [400 lb]
Max. Moment (**Mx/My/Mz**): 810 Nm [7200 in-lb]



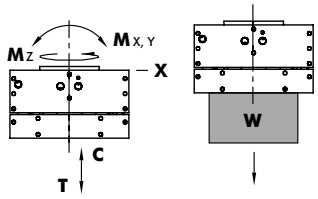

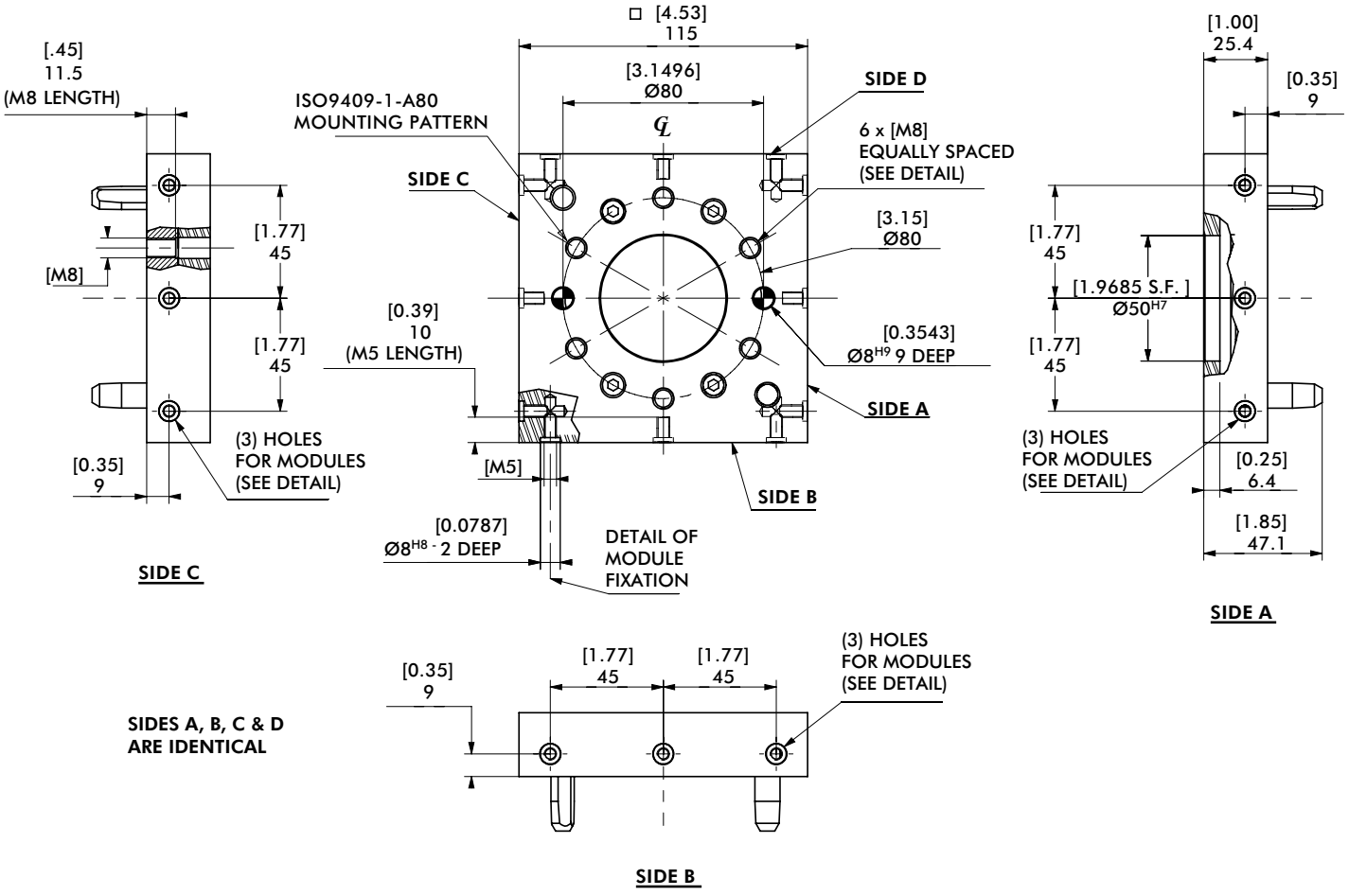

UNLESS OTHERWISE NOTED ALL TOLERANCES ARE AS SHOWN BELOW

DIMENSIONS ARE SYMMETRICAL ABOUT CENTERLINE	THIRD ANGLE PROJECTION	ALL DOWEL HOLES ARE SF (SLIP FIT). LOCATIONAL TOLERANCE ±.0005" OR [±.013MM]	METRIC THREADS COURSE PITCH	IMPERIAL ([IN.])	METRIC (MM)
				0.00 = ± .01 0.000 = ± .005 0.0000 = ± .0005	[0] = [± .25] [0.0] = [± .13] [0.00] = [± .013]

DESTACO a DOVER company

RQC-400, 800, 1200/RTP-400, 800, 1200

Automatic Tool Changers | Module Usage Illustrations

RQC-400
Robot Plate
with Optional Modules

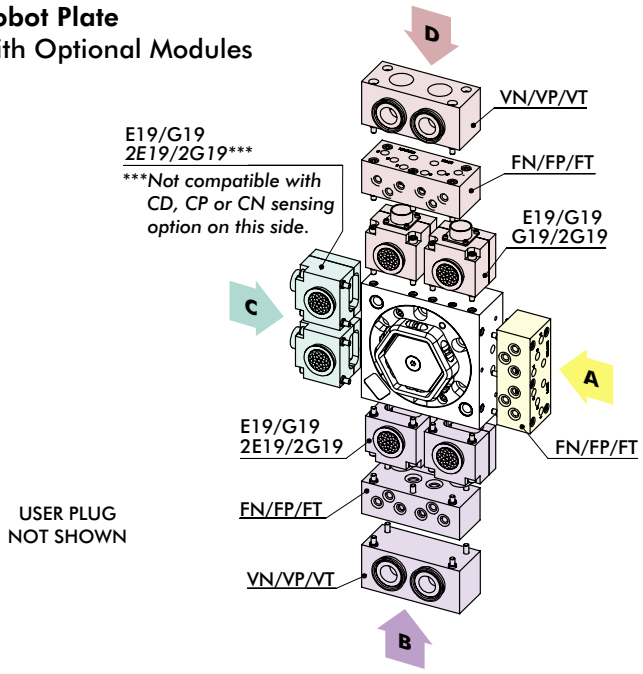

RTP-400
Tool Plate
with Optional Modules
(Tool Plate)

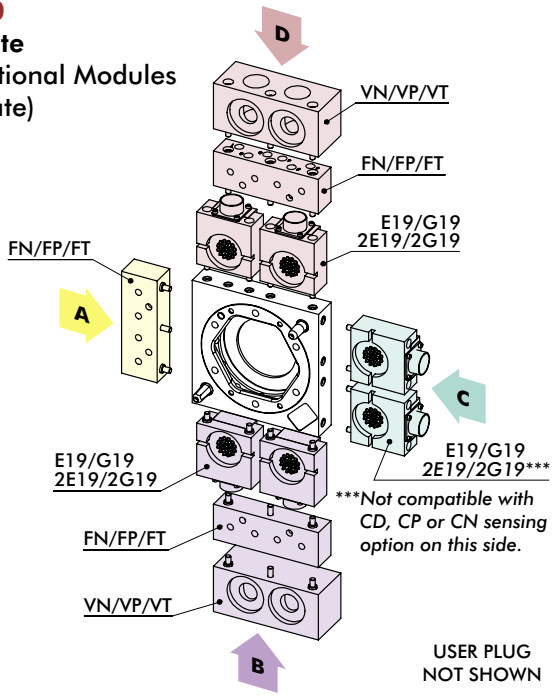

RQC-800/RQC-1200
Robot Plate
with Optional Modules

NOTE: Only (1) module can be mounted per side (except 2E19, 2G19 which are composed of (2) modules)

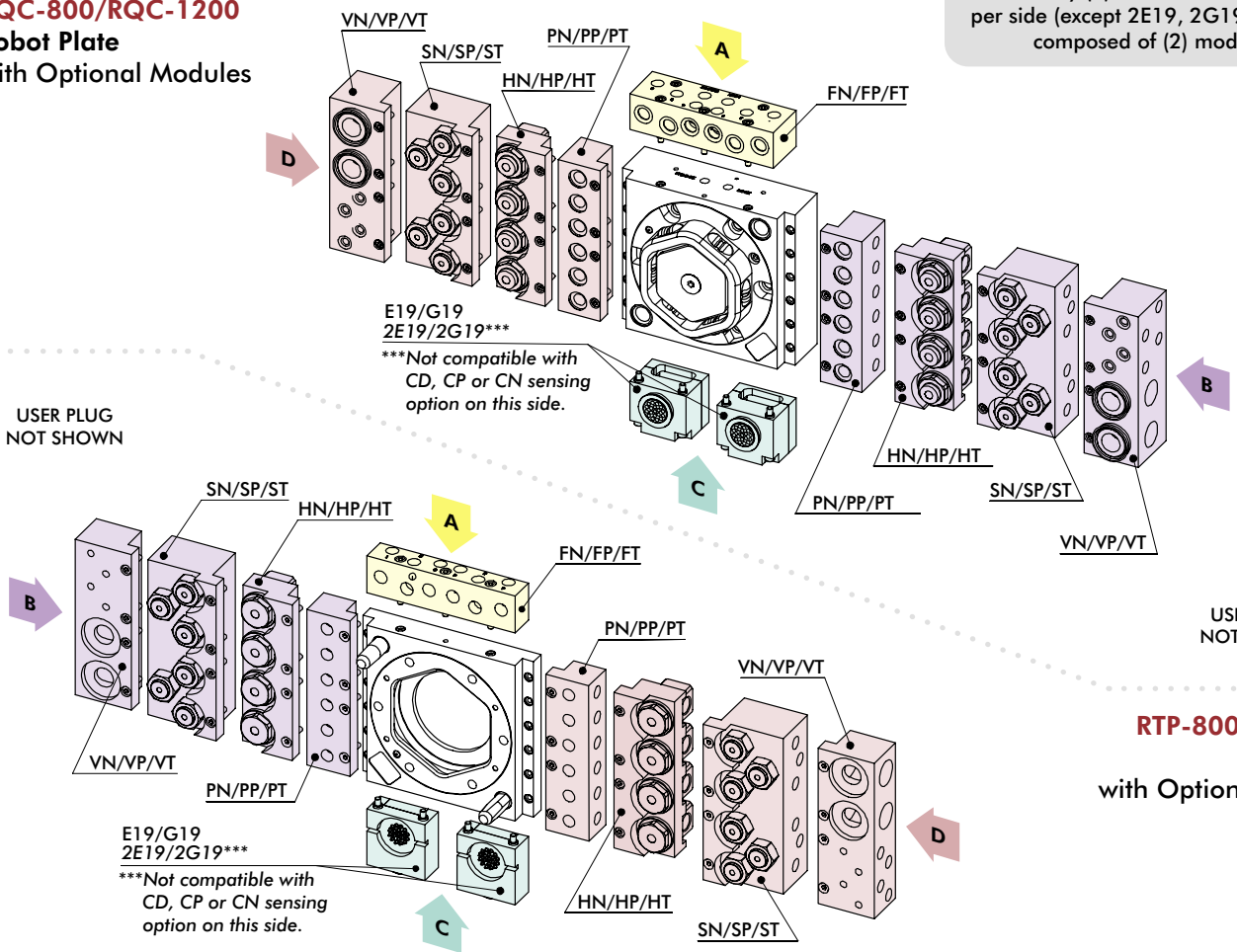

RTP-800/RTP-1200
Tool Plate
with Optional Modules

Dimensions and technical information are subject to change without notice

RQC-400, 800, 1200/RTP-400, 800, 1200

Automatic Tool Changers | Ordering Information

Base Model	Model Size	Port Options (RQC-only)	Sensing (RQC-only)	Side A MODULES	Side B MODULES	Side C MODULES	Side D MODULES
RQC	400	N	L0	0	0	0	0

Base Model
- **RQC** — Robot Plate
- **RTP** — Tool Plate

Model Size
- **400**
- **800**
- **1200**

(See Page TC-RQTP-2 for Specifications)

Port Options (RQC-only)
- **N** — 1/8 NPT
- **M** — 1/8 BSPP
- **A** — 1/8 BSPT

Sensing (RQC-only)
- **L0** No Sensing
- **LP*** PNP Inductive Sensing
- **CP†** PNP Inductive Sensing with M12 connector
- **LN*** NPN Inductive Sensing
- **CN†** NPN Inductive Sensing with M12 connector
- **LD*** Dry contact sensor
- **CD†** Dry contact sensor with M12 connector

*Requires **E19** or **G19** module mounted on **Side C**.
†Cordset or plug are sold separately.

Optional Electrical, Air, Vacuum and Fluid Modules can be ordered with Base Model

See below for Module Description

(See Pg. TC-RQTP-7 for Illustrated Module Config.)

400	800/1200	Side A	Side B	Side C	Side D	Order Code	Optional Modules
●	●	●	●	●	●	0	No Module
	●			●		E19†	19 pin, 3 Amp, 48 VDC Module w/Turck M12 Conn, w/o Cordset
	●			●***		2E19†***	2X 19 pin, 3 Amp, 48 VDC Module w/Turck M12 Conn, w/o Cordset
	●			●		G19	19 pin, 5 Amp, 120 VDC Module w/Industrial User Conn., w/o Cable
	●			●***		2G19***	2X 19 pin, 5 Amp, 120 VDC Module w/Industrial User Conn., w/o Cable
●			●	●	●	E19†	19 pin, 3 Amp, 48 VDC Module w/Turck M12 Conn, w/o Cordset
●			●	●***	●	2E19†***	2X 19 pin, 3 Amp, 48 VDC Module w/Turck M12 Conn, w/o Cordset
●			●	●	●	G19	19 pin, 5 Amp, 120 VDC Module w/Industrial User Conn., w/o Cable
●			●	●***	●	2G19***	2X 19 pin, 5 Amp, 120 VDC Module w/Industrial User Conn., w/o Cable
●		●	●		●	FN	6X 1/8" NPT Air Ports Module, Face Seal, 10 Bar
●		●	●		●	FP	6X 1/8" BSPP Air Ports Module, Face Seal, 10 Bar
●		●	●		●	FT	6X 1/8" BSPT Air Ports Module, Face Seal, 10 Bar
	●	●				FN	6X 1/4" NPT Air Ports Module, Face Seal, 10 Bar
	●	●				FP	6X 1/4" BSPP Air Ports Module, Face Seal, 10 Bar
	●	●				FT	6X 1/4" BSPT Air Ports Module, Face Seal, 10 Bar
	●		●		●	PN	6X 1/4" NPT Air Ports Module, Face Seal, 10 Bar
	●		●		●	PP	6X 1/4" BSPP Air Ports Module, Face Seal, 10 Bar
	●		●		●	PT	6X 1/4" BSPT Air Ports Module, Face Seal, 10 Bar
	●		●		●	SN	6X 1/4" NPT Air Ports Module, Self Sealing, 10 Bar
	●		●		●	SP	6X 1/4" BSPP Air Ports Module, Self Sealing, 10 Bar
	●		●		●	ST	6X 1/4" BSPT Air Ports Module, Self Sealing, 10 Bar
●			●		●	VN	2X 3/4" Vacuum NPT Ports Module, Face Sealing
●			●		●	VP	2X 3/4" Vacuum BSPP Ports Module, Face Sealing
●			●		●	VT	2X 3/4" Vacuum BSPT Ports Module, Face Sealing
	●		●		●	VN	2X 3/4" Vacuum + 4 X 1/4" Air NPT Ports Module, Face Sealing
	●		●		●	VP	2X 3/4" Vacuum + 4 X 1/4" Air BSPP Ports Module, Face Sealing
	●		●		●	VT	2X 3/4" Vacuum + 4 X 1/4" Air BSPT Ports Module, Face Sealing
	●		●		●	HN	4X 3/8" NPT Fluid Ports Module, 100 Bar
	●		●		●	HP	4X 3/8" BSPP Fluid Ports Module, 100 Bar
	●		●		●	HT	4X 3/8" BSPT Fluid Ports Module, 100 Bar

†Cordset or plug are sold separately. ***Not compatible with **CD**, **CP** or **CN** sensing option **on Side C**.

NOTE: Only (1) module can be mounted per side. (Except **2E19** and **2G19**, which are composed of (2) modules).
Modules usage is based on the size of the Base Model and which side the module can be mounted.

Electrical and pneumatic accessories are ordered separately.

Please note some electrical accessories can only be used with certain modules for either **RQC** or **RTP** "Base Models".

For pneumatic accessories, size of "Base Model" is considered.

ELECTRICAL ACCESSORIES

ELCT-048	90° Female Plug, w/o Cable, Solder Type, Cable Clamp for G19 (RQC Only)
ELCT-049	90° male Plug, w/o Cable, Solder Type, Cable Clamp for G19 (RTP Only)
CABL-028	90° Female M12 Cordset with 2M Cable for CP, CN, and CD (RQC Only)
CABL-029	90° Female Cordset with 4M Cable for E19 (RQC Only)
CABL-031	90° male Cordset with 2M Cable for E19 (RTP Only)
OSRK-004	PNP Inductive Sensor Repair Kit (RQC Only)
OSRK-005	NPN Inductive Sensor Repair Kit (RQC Only)
OSRK-006	Dry Contact Sensor Repair Kit (RQC Only)

PNEUMATIC ACCESSORIES

SLKT-402	RQC-400 Standard Seal Repair Kit
SLKT-403	RQC-800 Standard Seal Repair Kit
SLKT-404	RQC-1200 Standard Seal Repair Kit

RQC-400 (ROBOT PLATE)

Automatic Tool Changers | Technical Specifications | Dimensions

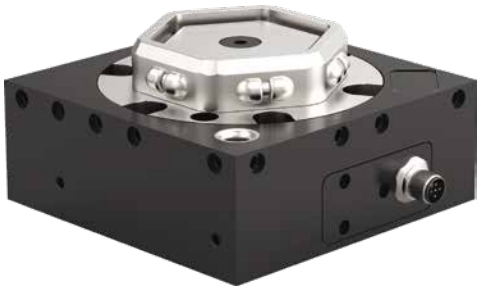

Specification:
Max. Payload **W**: 180 Kg [400 lb]
Weight: 3.6 Kg [7.94 lb]
Cylinder Bore: Ø73mm [2.87in]
Displacement: 80.9 cm³ [4.93in³]

Loading Capacity:
Max. Tensile **T**: 2670 N [600 lb]
Max. Compressive **C**: 3560 N [800 lb]
Max. Moment (**Mx/My/Mz**): 1580 Nm [14000 in-lb]

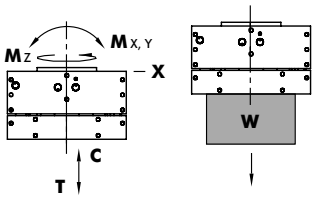

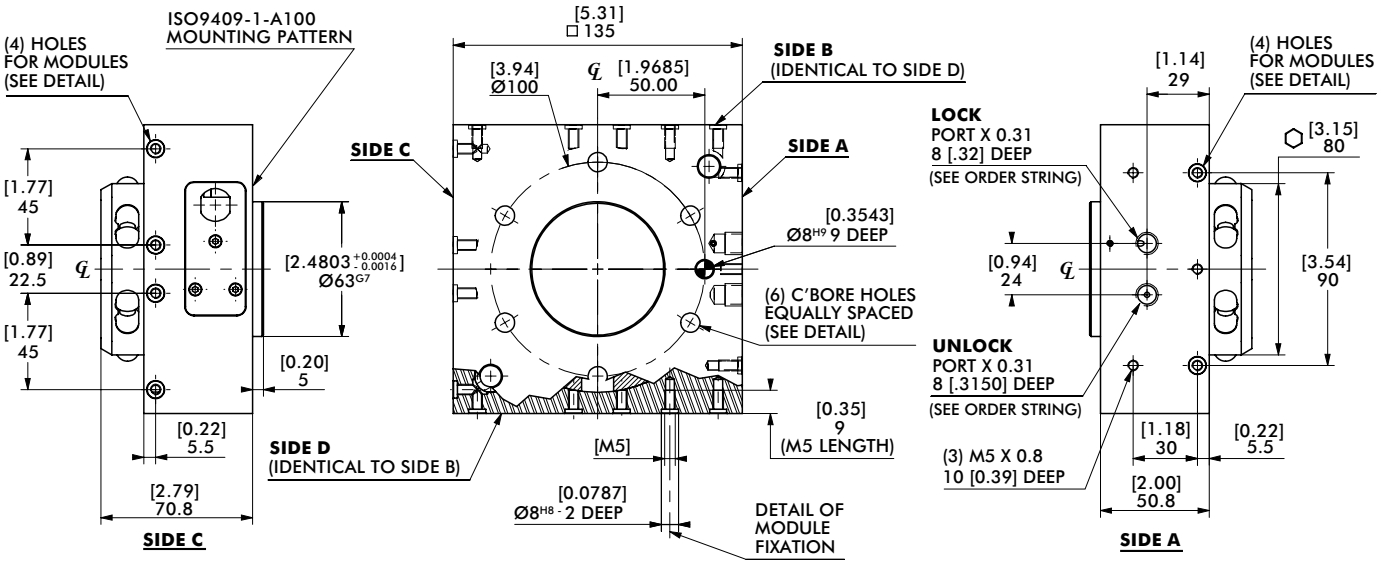

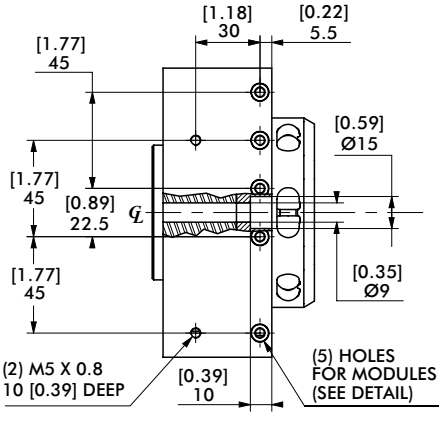

FAILSAFE OPERATION:
4-WAY VALVES WITH A SPRING RETURN ARE RECOMMENDED TO MAINTAIN AIR PRESSURE TO THE LOCK PORT DURING EMERGENCY STOP CONDITIONS.

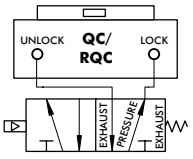

UNLESS OTHERWISE NOTED ALL TOLERANCES ARE AS SHOWN BELOW

DIMENSIONS ARE SYMMETRICAL ABOUT CENTERLINE	THIRD ANGLE PROJECTION	ALL DOWEL HOLES ARE SF (SLIP FIT). LOCATIONAL TOLERANCE ±.0005" OR [±.013MM]	METRIC THREADS COURSE PITCH	IMPERIAL ([IN.])	METRIC (MM)
				0.00 = ± .01 0.000 = ± .005 0.0000 = ± .0005	[0] = [± .25] [0.0] = [± .13] [0.00] = [± .013]

Dimensions and technical information are subject to change without notice

RTP-400 (TOOL PLATE)

Specification:
Max. Payload **W**: 180 Kg [400 lb]
Weight: 1.1 Kg [2.43 lb]

Loading Capacity:
Max. Tensile **T**: 2670 N [600 lb]
Max. Compressive **C**: 3560 N [800 lb]
Max. Moment (**Mx/My/Mz**): 1580 Nm [14000 in-lb]



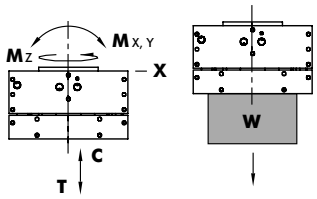

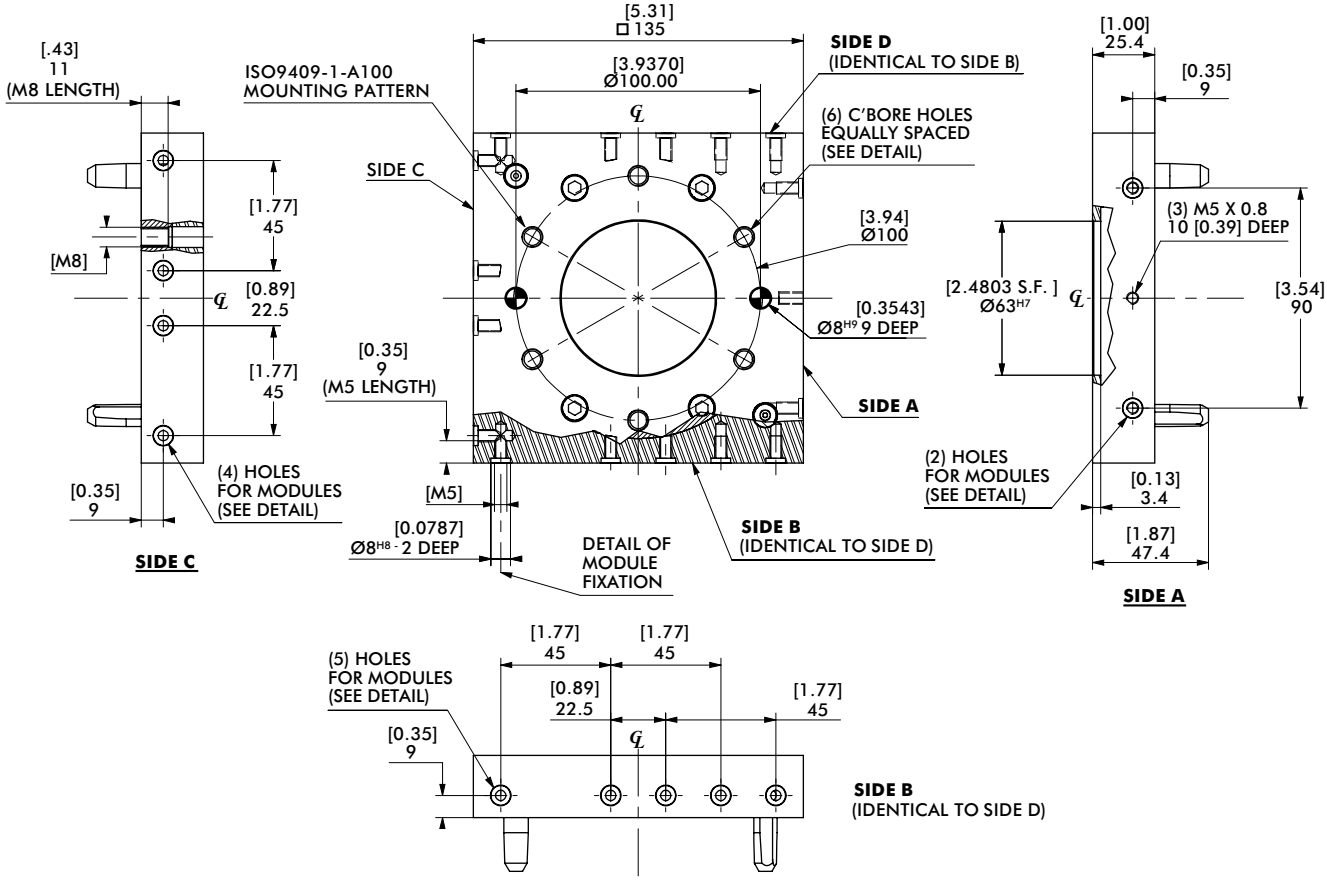

UNLESS OTHERWISE NOTED ALL TOLERANCES ARE AS SHOWN BELOW

DIMENSIONS ARE SYMMETRICAL ABOUT CENTERLINE	THIRD ANGLE PROJECTION	ALL DOWEL HOLES ARE SF (SLIP FIT). LOCATIONAL TOLERANCE ±.0005" OR [±.013MM]	METRIC THREADS COURSE PITCH	IMPERIAL ([IN.])	METRIC (MM)
				0.00 = ± .01 0.000 = ± .005 0.0000 = ± .0005	[0] = [± .25] [0.0] = [± .13] [0.00] = [± .013]

RQC-800, RQC-1200 (ROBOT PLATE)

Automatic Tool Changers | Technical Specifications | Dimensions



RQC-800 Specification:
Max. Payload **W**: 360 Kg [800 lb]
Weight: 5.3 Kg [11.68 lb]
Cyl. Bore: Ø80mm [3.15in]
Displacement: 95.6 cm³ [5.83in³]

Loading Capacity:
Max. Tensile **T**:
5340 N [1200 lb]
Max. Compressive **C**:
7120 N [1600 lb]
Max. Moment (Mx/My/Mz):
2490 Nm [22000 in-lb]

RQC-1200 Specification:
Max. Payload **W**: 550 Kg [1200 lb]
Weight: 6.4 Kg [14.11 lb]
Cyl. Bore: Ø95mm [3.74in]
Displacement: 153.7 cm³ [9.38in³]

Loading Capacity:
Max. Tensile **T**:
8000 N [1800 lb]
Max. Compressive **C**:
10700 N [2400 lb]
Max. Moment (Mx/My/Mz):
3390 Nm [30000 in-lb]

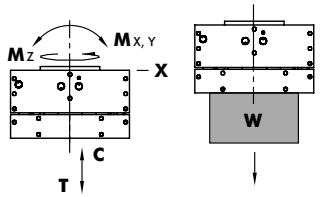

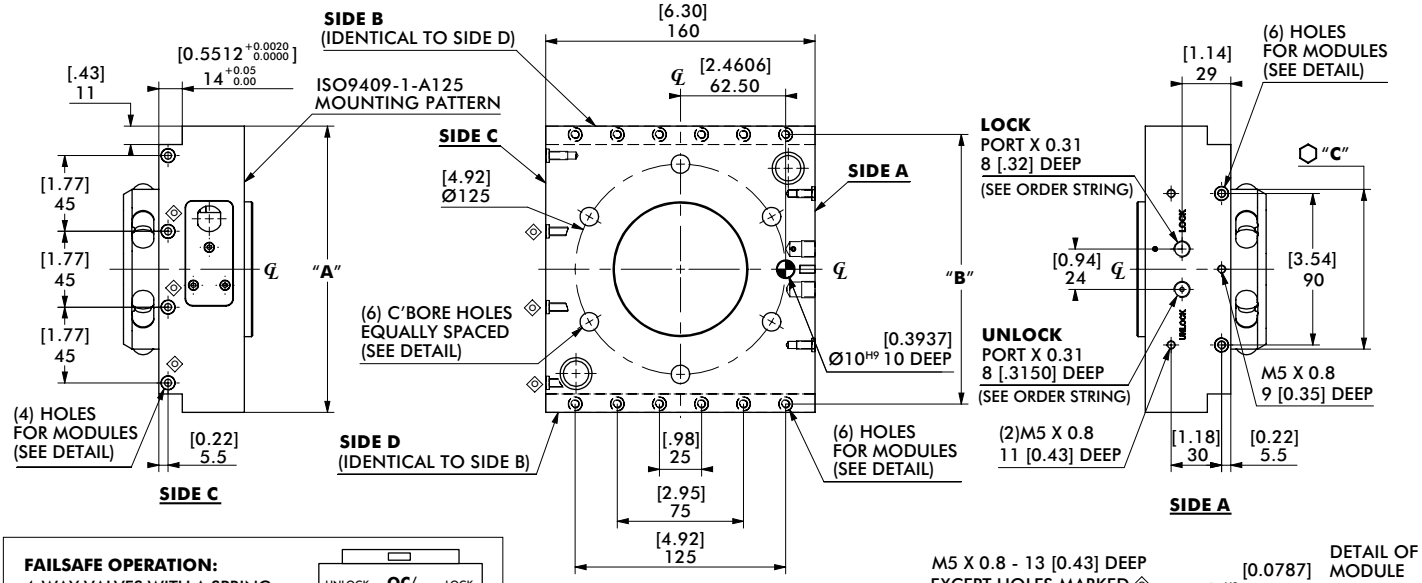

FAILSAFE OPERATION:
4-WAY VALVES WITH A SPRING RETURN ARE RECOMMENDED TO MAINTAIN AIR PRESSURE TO THE LOCK PORT DURING EMERGENCY STOP CONDITIONS.

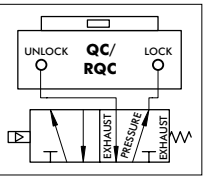

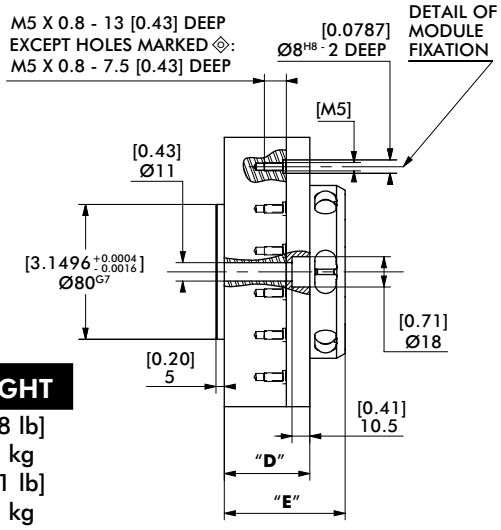

UNLESS OTHERWISE NOTED ALL TOLERANCES ARE AS SHOWN BELOW

DIMENSIONS ARE SYMMETRICAL ABOUT CENTERLINE	THIRD ANGLE PROJECTION	ALL DOWEL HOLES ARE SF (SLIP FIT). LOCATIONAL TOLERANCE ±.0005" OR [±.013MM]	METRIC THREADS COURSE PITCH	IMPERIAL ([IN.])	METRIC (MM)
				0.00 = ± .01 0.000 = ± .005 0.0000 = ± .0005	[0] = [± .25] [0.0] = [± .13] [0.00] = [± .013]

MODEL NUMBER	"A"	"B"	"C"	"D"	"E"	WEIGHT
RQC-800	[6.69] 170.0	[6.2992] 160.0	[3.73] 94.75	[2.00] 50.8	[2.82] 71.75	[11.8 lb] 6.3 kg
RQC-1200	[7.01] 178.0	[6.6142] 168.0	[4.08] 103.6	[2.25] 57.15	[3.31] 84.15	[14.1 lb] 6.4 kg

RTP-800, RTP-1200 (TOOL PLATE)

Automatic Tool Changers | Technical Specifications | Dimensions

RTP-800 Specification:
Max. Payload **W**: 360 Kg [800 lb]
Weight: 1.8 Kg [3.97 lb]

Loading Capacity:
Max. Tensile **T**:
5340 N [1200 lb]
Max. Compressive **C**:
7120 N [1600 lb]
Max. Moment (**Mx/My/Mz**):
2490 Nm [22000 in-lb]

RTP-1200 Specification:
Max. Payload **W**: 550 Kg [1200 lb]
Weight: 1.9 Kg [4.19 lb]

Loading Capacity:
Max. Tensile **T**:
8000 N [1800 lb]
Max. Compressive **C**:
10700 N [2400 lb]
Max. Moment (**Mx/My/Mz**):
3390 Nm [30000 in-lb]



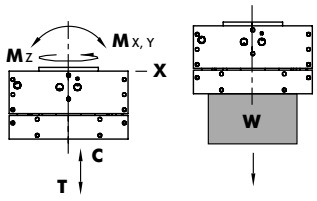

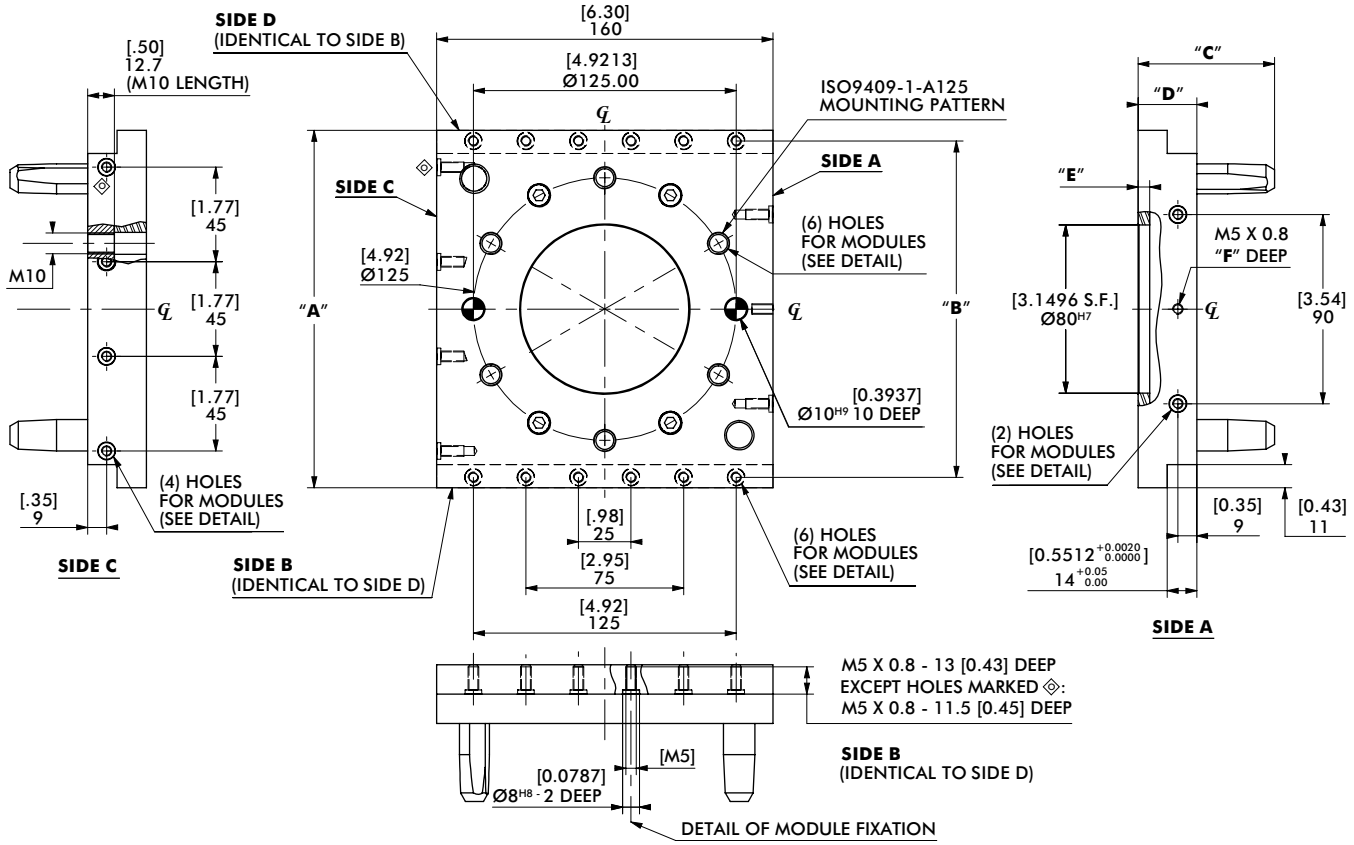

UNLESS OTHERWISE NOTED ALL TOLERANCES ARE AS SHOWN BELOW

DIMENSIONS ARE SYMMETRICAL ABOUT CENTERLINE	THIRD ANGLE PROJECTION	ALL DOWEL HOLES ARE SF (SLIP FIT). LOCATIONAL TOLERANCE ±.0005" OR [±.013MM]	METRIC THREADS COURSE PITCH	IMPERIAL ([IN.])	METRIC (MM)
				0.00 = ±.01 0.000 = ±.005 0.0000 = ±.0005	[0] = [±.25] [0.0] = [±.13] [0.00] = [±.013]

MODEL NUMBER	"A"	"B"	"C"	"D"	"E"	"F"	WEIGHT
RTP-800	[6.69] 170.0	[6.2992] 160.0	[2.56] 64.94	[1.10] 27.94	[0.22] 5.5	[0.39] 10.0	[4.00 lb] 1.8 kg
RTP-1200	[7.01] 178	[6.6142] 168.0	[2.71] 68.75	[1.25] 31.75	[0.13] 3.25	[0.30] 7.5	[2.90 lb] 1.32 kg

RQC-2400/RTP-2400

Automatic Tool Changers | Module Usage Illustrations

RQC-2400
Robot Plate
with Optional Modules

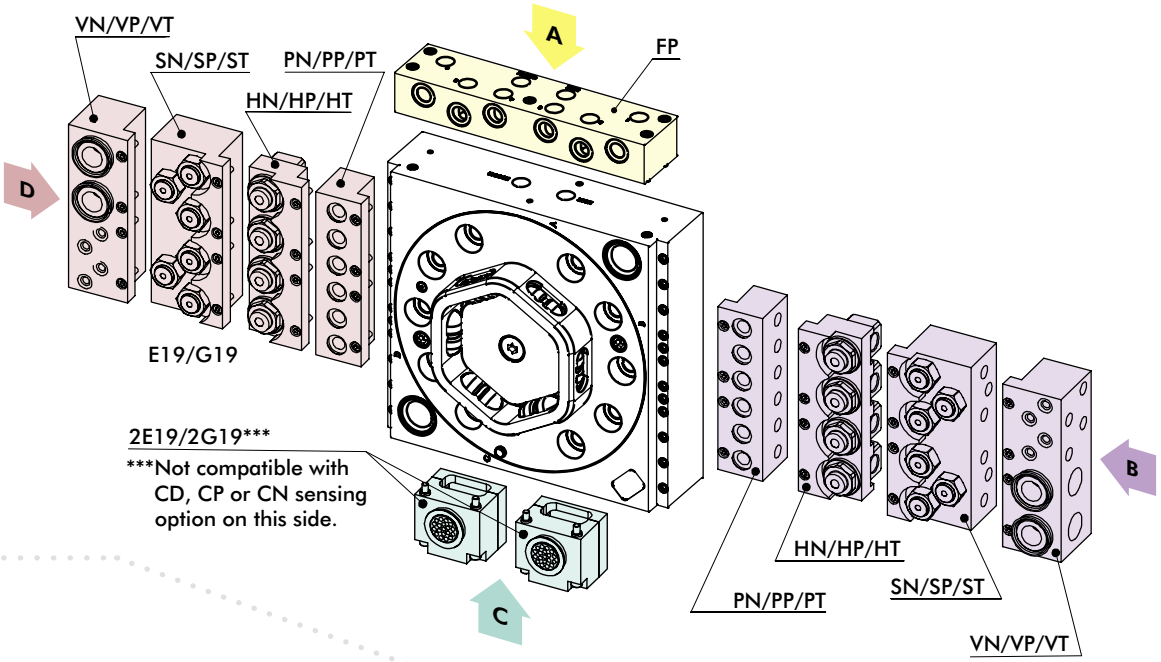

RTP-2400
Tool Plate
with Optional Modules

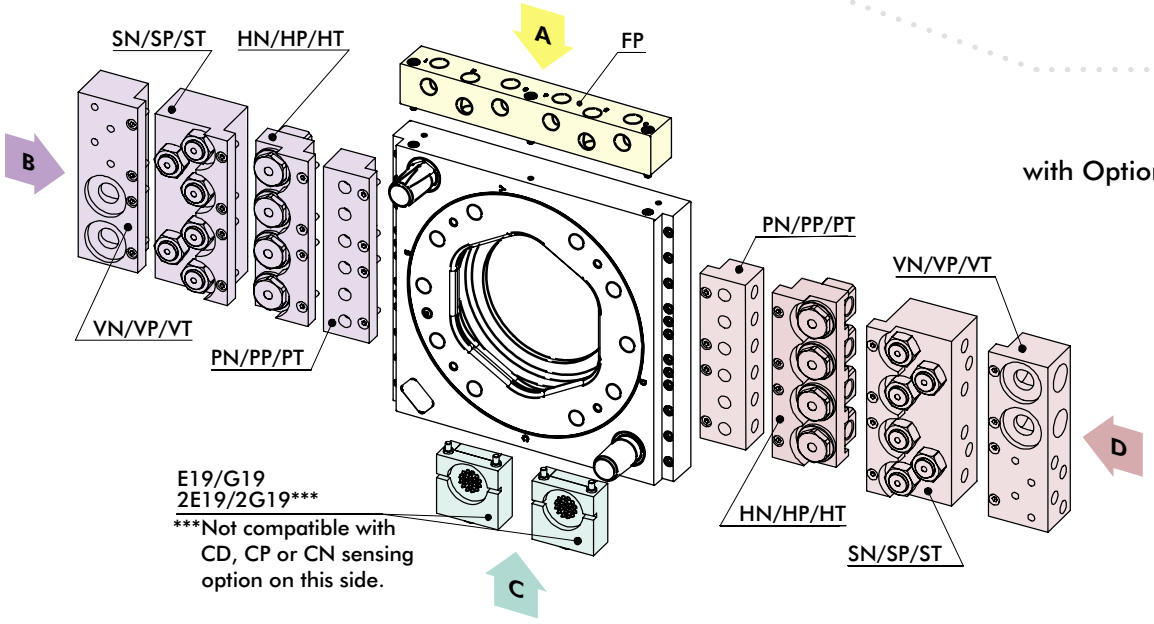

USER PLUG NOT SHOWN

RQC-2400/RTP-2400

Automatic Tool Changers | Ordering Information



Robot Plate
RQC-2400

Tool Plate
RTP-2400

Base Model	Model Size	Port Options (RQC-only)	Sensing (RQC-only)	Side A MODULES	Side B MODULES	Side C MODULES	Side D MODULES
RQC	2400	N	L0	0	0	0	0

Base Model
- **RQC** — Robot Plate
- **RTP** — Tool Plate

Model Size
- **2400** (See Page 8 for Specifications)

Port Options (RQC-only)
- **N** — 1/8 NPT
- **M** — 1/8 BSPP
- **A** — 1/8 BSPT

Sensing (RQC-only)
- **L0** — No Sensing
- **LP*** — PNP Inductive Sensing
- **CP†** — PNP Inductive Sensing with M12 connector
- **LN*** — NPN Inductive Sensing
- **CN†** — NPN Inductive Sensing with M12 connector
- **LD*** — Dry contact sensor
- **CD†** — Dry contact sensor with M12 connector

*Requires **E19** or **G19** module mounted on **Side C**.
†Cordset or plug are sold separately.

Optional Air Modules can be ordered with Base Model

See below for Module Description

(See Pg. TC-RQTP-13 for Illustrated Module Config.)

Side A	Side B	Side C	Side D	Order Code	Optional Modules
●	●	●	●	0	No Module
		●		E19†	19 pin, 3 Amp, 48 VDC Module w/Turck M16 Conn, w/o Cordset
		●***		2E19†***	2X 19 pin, 3 Amp, 48 VDC Module w/Turck M16 Conn, w/o Cordset
		●		G19	19 pin, 5 Amp, 120 VDC Module w/Industrial User Conn., w/o Cable
		●***		2G19***	2X 19 pin, 5 Amp, 120 VDC Module w/Industrial User Conn., w/o Cable
●				FP	6X 1/4" BSPP Air Ports Module, Face Seal, 10 Bar
	●		●	PN	6X 1/4" NPT Air Ports Module, Face Seal, 10 Bar
	●		●	PP	6X 1/4" BSPP Air Ports Module, Face Seal, 10 Bar
	●		●	PT	6X 1/4" BSPT Air Ports Module, Face Seal, 10 Bar
	●		●	SN	6X 1/4" NPT Air Ports Module, Self Sealing, 10 Bar
	●		●	SP	6X 1/4" BSPP Air Ports Module, Self Sealing, 10 Bar
	●		●	ST	6X 1/4" BSPT Air Ports Module, Self Sealing, 10 Bar
	●		●	HN	4X 3/8" NPT Fluid Ports Module, 100 Bar
	●		●	HP	4X 3/8" BSPP Fluid Ports Module, 100 Bar
	●		●	HT	4X 3/8" BSPT Fluid Ports Module, 100 Bar

†Cordset or plug are sold separately. ***Not compatible with **CD**, **CP** or **CN** sensing option.

NOTE: Only (1) module can be mounted per side. (Except **2E19** and **2G19**, which are composed of (2) modules). Modules usage is based on the size of the Base Model and which side the module can be mounted.

RQC-2400 (ROBOT PLATE)

Automatic Tool Changers | Technical Specifications | Dimensions



RQC-2400 Specification:
Max. Payload **W**: 1089Kg [2400 lb]
Weight: 22 Kg [48.5 lb]
Cyl. Bore: Ø80mm [3.15in]
Displacement: XXXcm³ [XXXin³]

Loading Capacity:
Max. Tensile **T**:
16000 N [3597 lb]
Max. Compressive **C**:
22000 N [4946 lb]
Max. Moment (Mx/My/Mz):
7000 Nm [91955 in-lb]

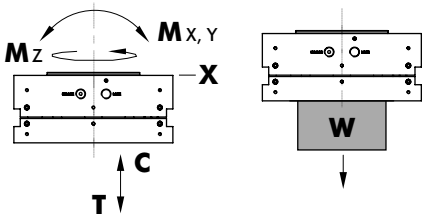

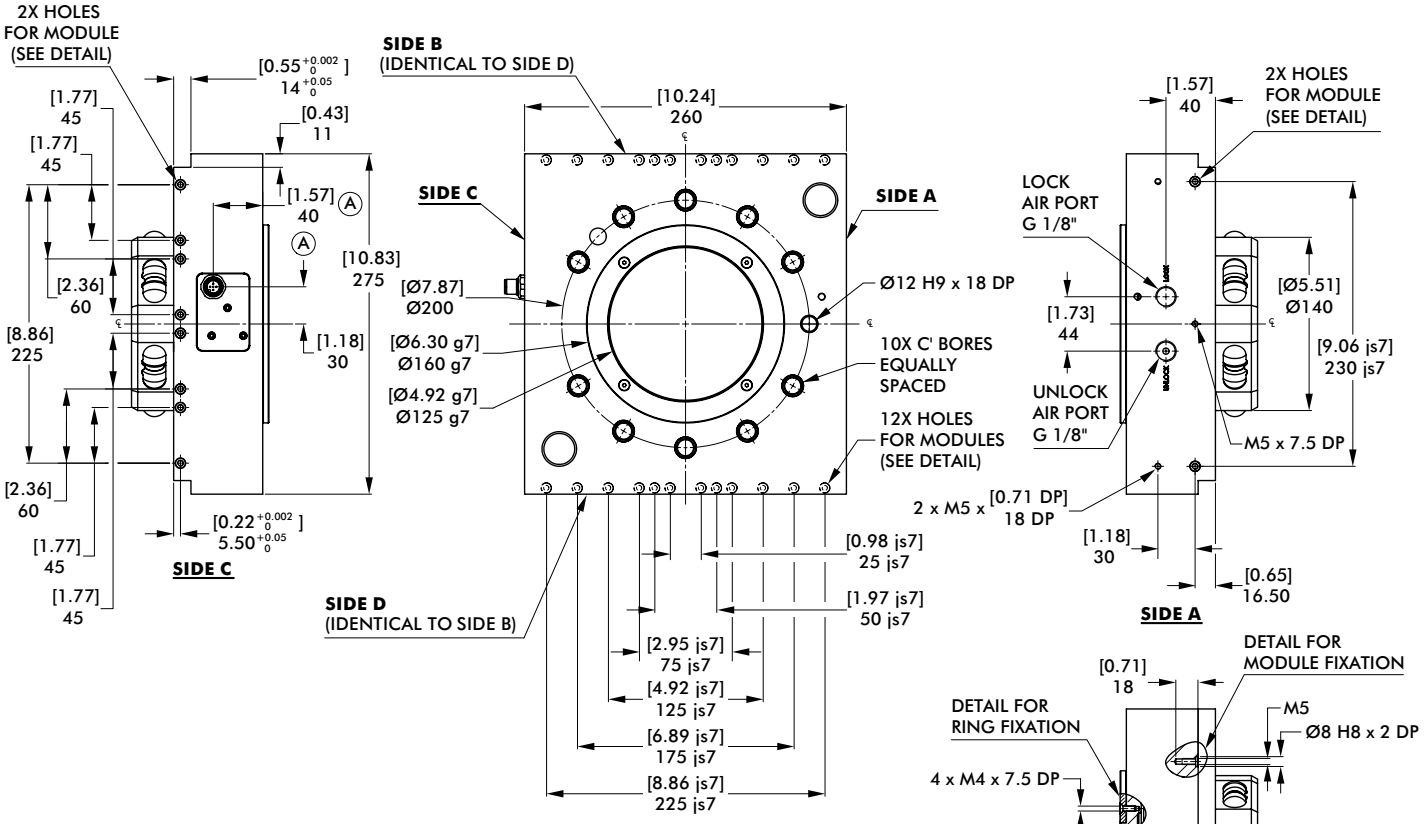

Possibility of having two sizes fixing screws M12 or M16.

A centering ring allows two possibility centering dimension robot connection.

FAILSAFE OPERATION:
4-WAY VALVES WITH A SPRING RETURN ARE RECOMMENDED TO MAINTAIN AIR PRESSURE TO THE LOCK PORT DURING EMERGENCY STOP CONDITIONS.

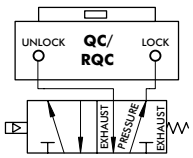

UNLESS OTHERWISE NOTED ALL TOLERANCES ARE AS SHOWN BELOW

DIMENSIONS ARE SYMMETRICAL ABOUT CENTERLINE	THIRD ANGLE PROJECTION	ALL DOWEL HOLES ARE SF (SLIP FIT). LOCATIONAL TOLERANCE ±.0005" OR [±.013MM]	METRIC THREADS COURSE PITCH	IMPERIAL ([IN.])	METRIC (MM)
				0.00 = ±.01 0.000 = ±.005 0.0000 = ±.0005	[0] = [±.25] [0.0] = [±.13] [0.00] = [±.013]

Dimensions and technical information are subject to change without notice

RTP-2400 (TOOL PLATE)

RTP-2400 Specification:
Max. Payload **W**: 1089Kg [2400 lb]
Weight: 8 Kg [17.64 lb]

Loading Capacity:
Max. Tensile **T**:
16000 N [3597 lb]
Max. Compressive **C**:
22000 N [4946 lb]
Max. Moment (**Mx/My/Mz**):
7000 Nm [91955 in-lb]

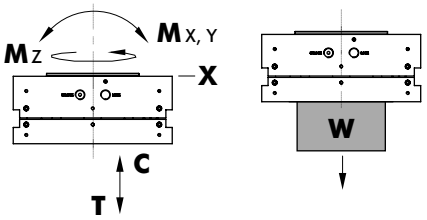

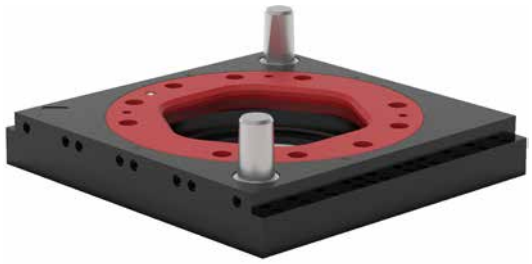

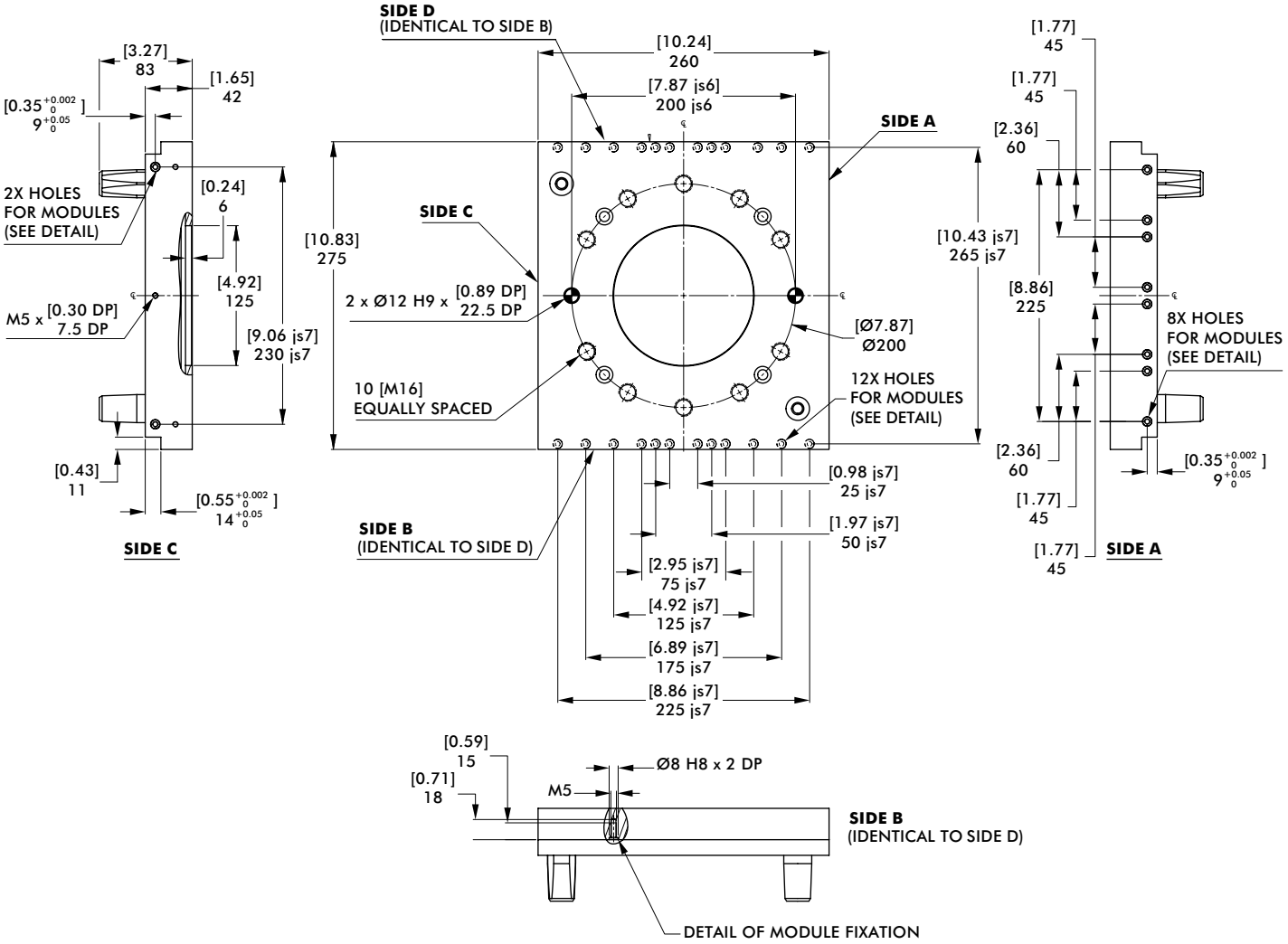

UNLESS OTHERWISE NOTED ALL TOLERANCES ARE AS SHOWN BELOW

DIMENSIONS ARE SYMMETRICAL ABOUT CENTERLINE	THIRD ANGLE PROJECTION	ALL DOWEL HOLES ARE SF (SLIP FIT). LOCATIONAL TOLERANCE ±.0005" OR [±.013MM]	METRIC THREADS COURSE PITCH	IMPERIAL ([IN.])	METRIC (MM)
				0.00 = ± .01 0.000 = ± .005 0.0000 = ± .0005	[0] = [± .25] [0.0] = [± .13] [0.00] = [± .013]

RQC/RTP SERIES

Automatic Tool Changers | Technical Specifications | Dimensions

19 Pin Module 3 Amp - 48 VDC

ROBOT HALF

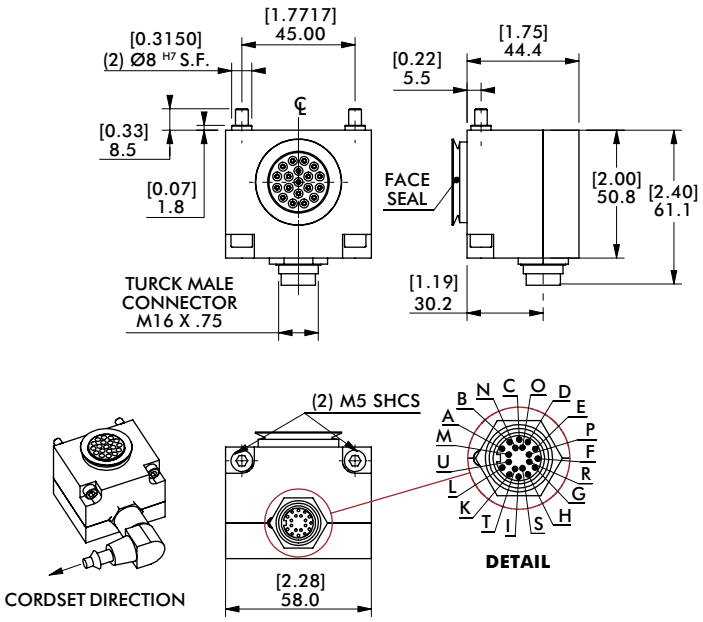

TOOL HALF

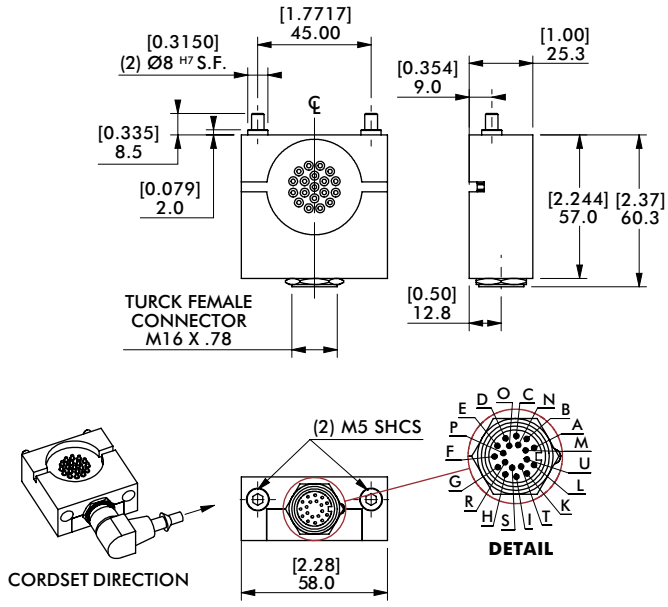

MODULE REPLACEMENT	ROBOT PLATE
E19	KE19-RQC

Module kits above include: 90° Plug Support (without cable), indexing sleeves and hardware.

MODULE REPLACEMENT	TOOL PLATE
E19	KE19-RTP

19 Pin Module 5 Amp - 120 VDC

ROBOT HALF

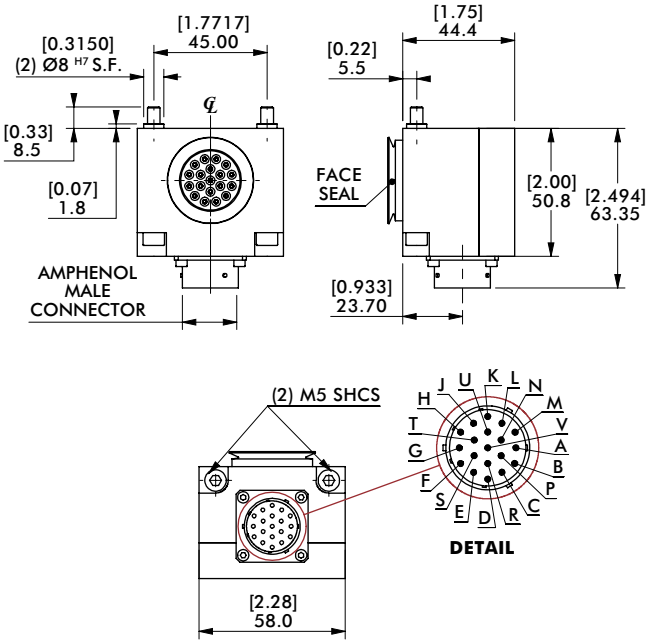

TOOL HALF

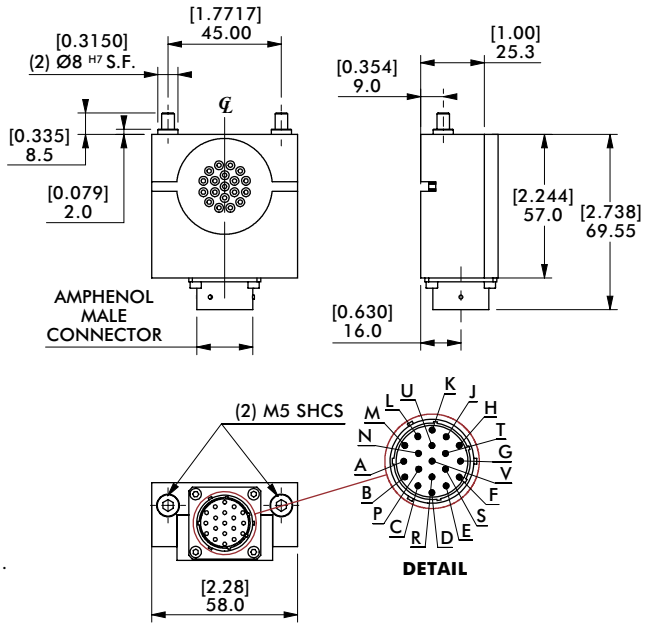

USER 90° PLUG NOT SHOWN.

MODULE REPLACEMENT	ROBOT PLATE
G19	KG19-RQC

Module kits above include: 90° Plug support (without cable), indexing sleeves and hardware.

MODULE REPLACEMENT	TOOL PLATE
G19	KG19-RTP

Dimensions and technical information are subject to change without notice

Modules Connecting with Latch/Unlatch Sensors

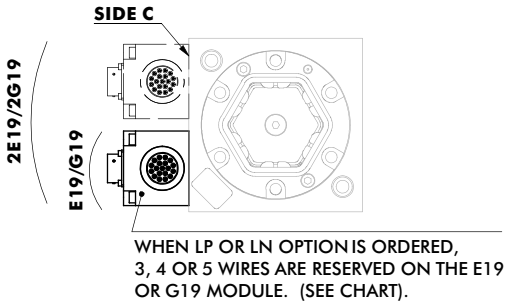

Reserved Pin Numbers on E19/G19		
Sensor/Switch	**RQC 200 & 400**	**RQC 800, 1200, 2400**
LP or **LN** (Inductive)	**R:** + 10 - 30 VDC **L:** Common **M:** Lock **N:** Unlock	**R:** + 10 - 30 VDC **L:** Common **M:** Lock **N:** Unlock **P:** Ready to Couple
LD (Dry Contact)	**R:** + 10 - 30 VDC **L:** Common **M:** Lock **N:** Unlock	**R:** + 10 - 30 VDC **L:** Common **M:** Lock **P:** Ready to Couple

Pin Numbering

E19 PINS NUMBERING

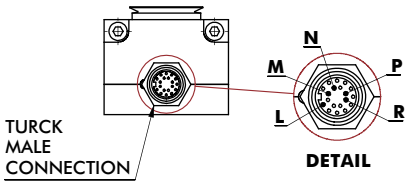

Wire Color on CABL-029 Cordset	
Contact	**Wire Color**
R	Red
L	Brown
M	Orange
N	Grey/Brown
P	White

G19 PINS NUMBERING

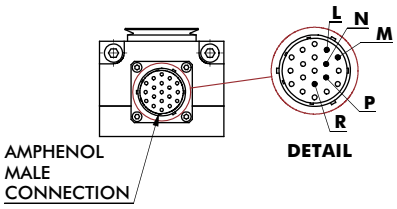

Lock/Unlock Tool Plate Presence Sensing Options (with inductive Sensors and Dry Contact Switches)

SENSING ACCESSORIES LP, LN, OR LD USING 19 PINS MODULES E19 OR G19 (REQUIRES 3, 4, OR 5 OF THE 19 PINS) (AS SHOWN ABOVE)

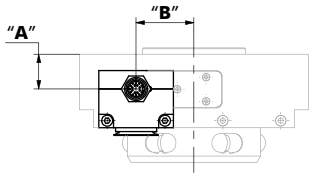

MODEL	"A"	"B"	"C"
RQC-200	[0.563] 14.3	[0.886] 22.5	[0.652] 16.55
RQC-400	[0.811] 20.6	[1.329] 33.7	[0.685] 17.4
RQC-800	[0.811] 20.6	[1.772] 45.0	[0.821] 20.8
RQC-1200	[1.061] 26.9	[1.772] 45.0	[1.071] 27.2

SENSING ACCESSORIES CP, CN, OR CD BY M12 CONNECTOR (3, 4, OR 5 PINS) (SEE BELOW)

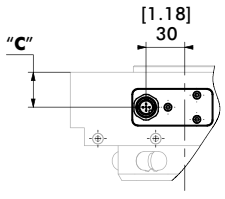

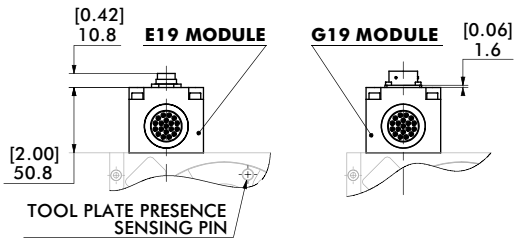

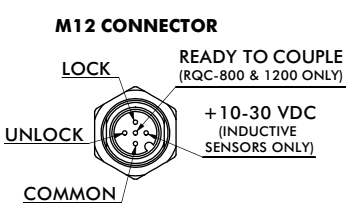

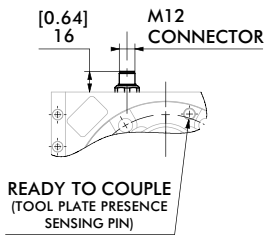

RQC/RTP SERIES

Automatic Tool Changers | Technical Specifications | Dimensions

6 x 1/8" Air Ports Module | Face Seal (for RQC/RTP-200 & RQC/RTP-400)

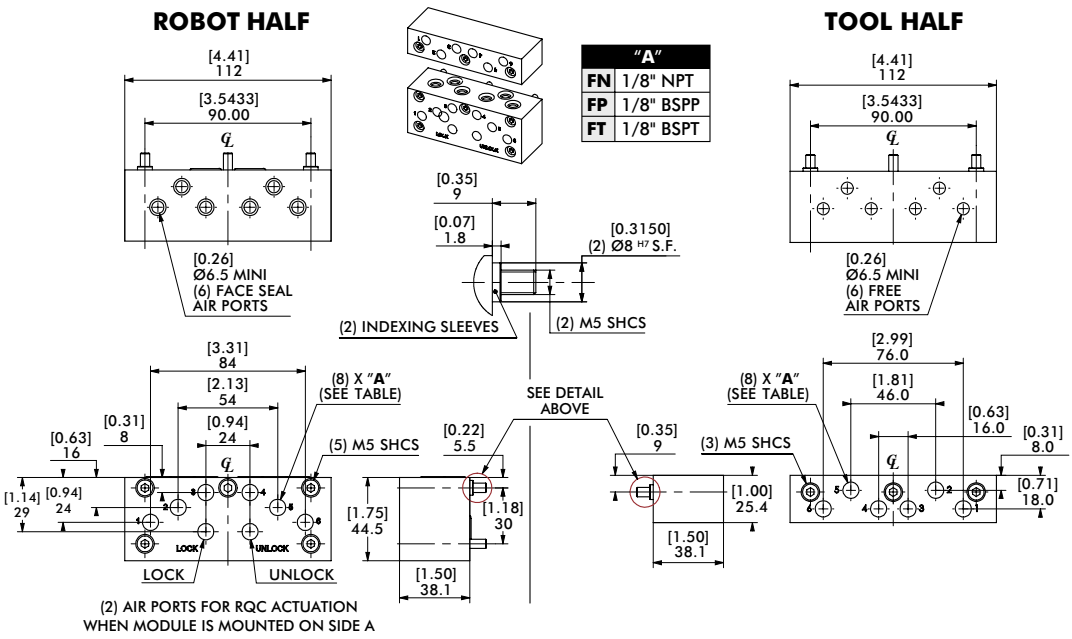

6 x 1/4" Air Ports Module | Face Seal (for RQC/RTP-800, -1200)

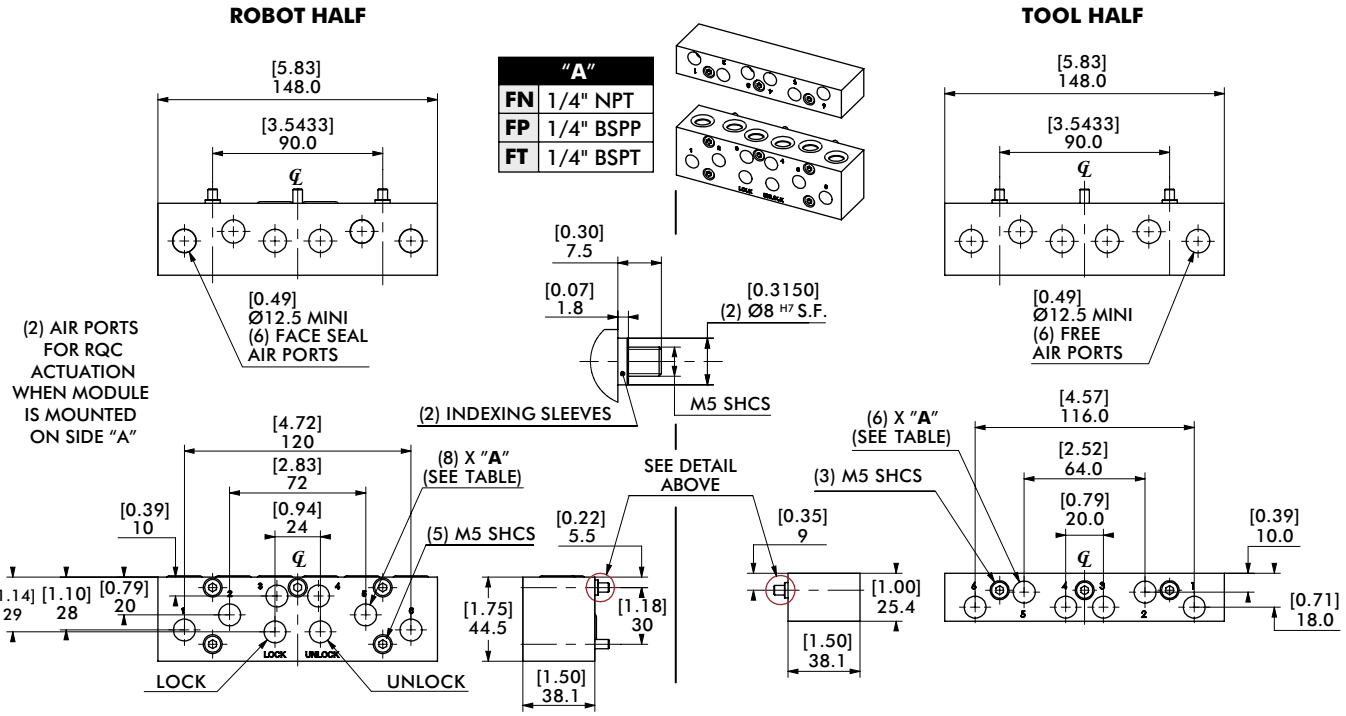

MODULE REPLACEMENT	RQC-200/400	RQC 800/1200
FN	KFN-RQC200	KFN-RQC800
FP	KFP-RQC200	KFP-RQC800
FT	KFT-RQC200	KFT-RQC800

MODULE REPLACEMENT	RTP-200/400	RTP 800/1200
FN	KFN-RTP200	KFN-RTP800
FP	KFP-RTP200	KFP-RTP800
FT	KFT-RTP200	KFT-RTP800

Module kits above include: Couplings, indexing sleeves and hardware.

Dimensions and technical information are subject to change without notice

2 x 3/4" Vacuum Ports Module | Face Seal (for RQC/RTP-200 & RQC/RTP-400)

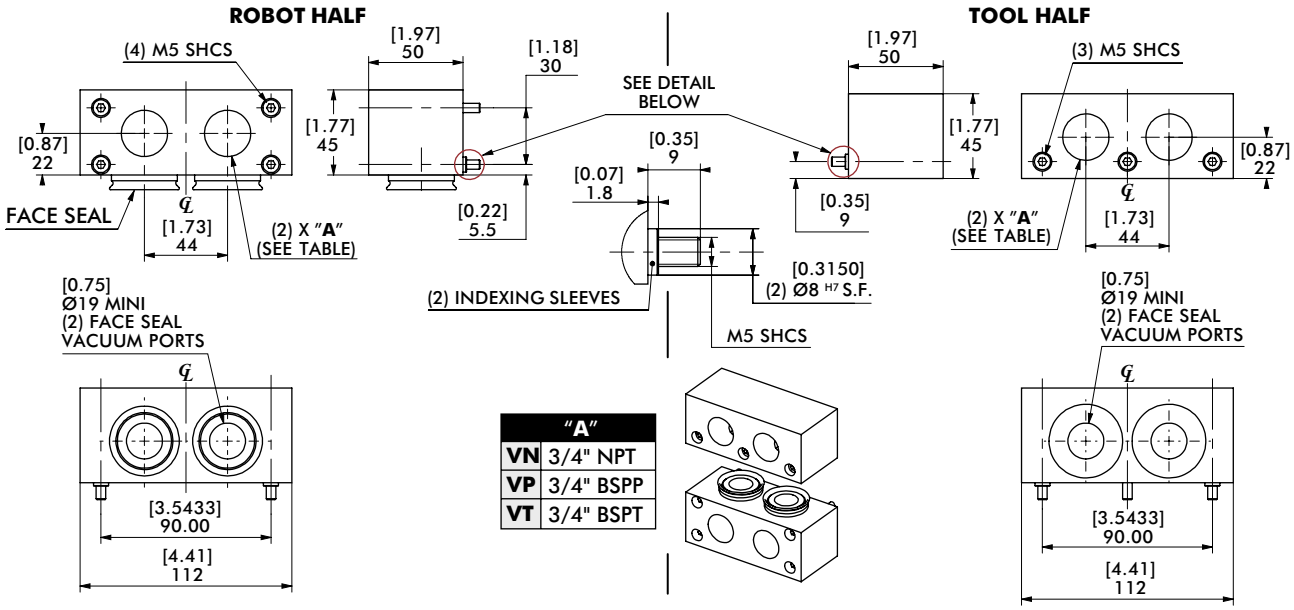

2 x 3/4" Vacuum Ports Module | Face Seal (for RQC/RTP-800, -1200, -2400)

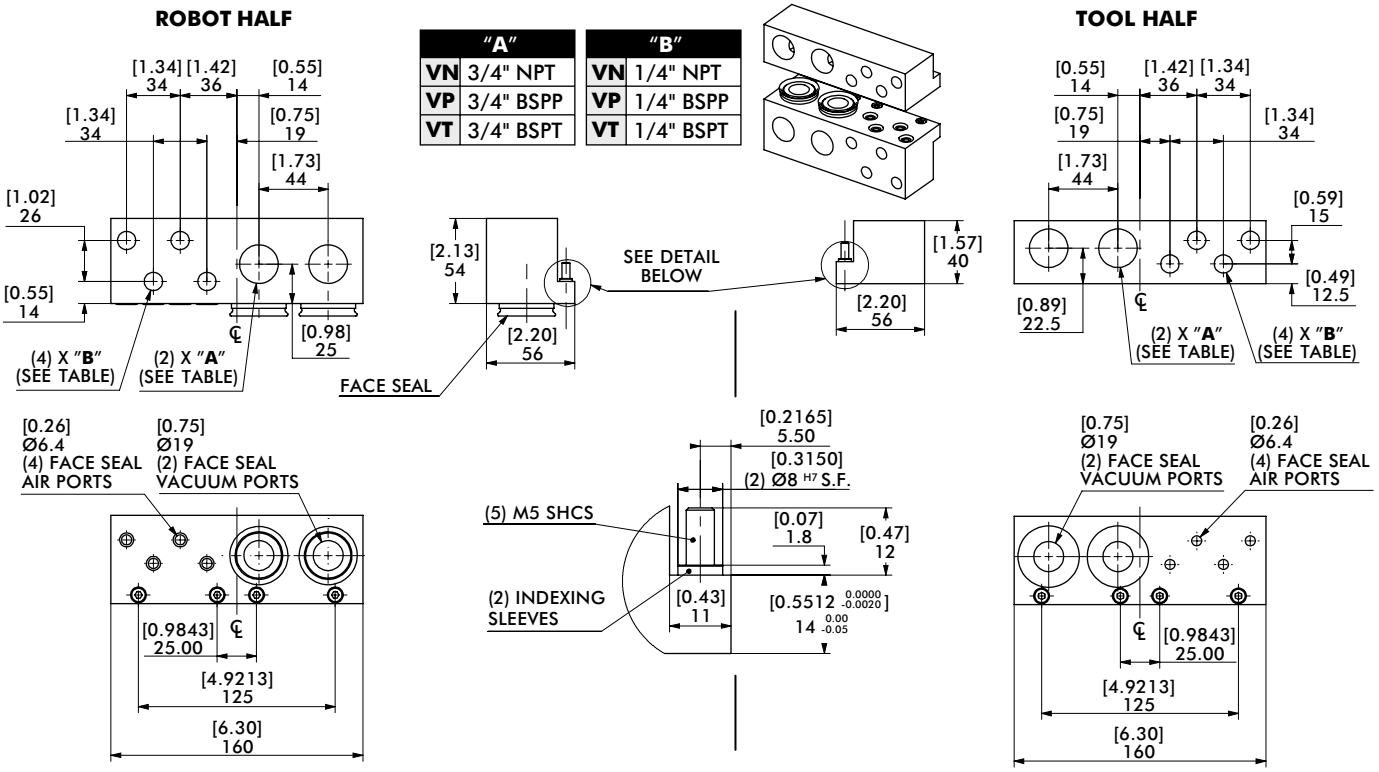

MODULE REPLACEMENT	RQC-200/400	RQC 800/1200/2400
VN	KVN-RQC200	KVN-RQC800
VP	KVP-RQC200	KVP-RQC800
VT	KVT-RQC200	KVT-RQC800

MODULE REPLACEMENT	RTP-200/400	RTP 800/1200/2400
VN	KVN-RTP200	KVN-RTP800
VP	KVP-RTP200	KVP-RTP800
VT	KVT-RTP200	KVT-RTP800

Module kits above include: Couplings, indexing sleeves and hardware.

RQC/RTP SERIES

Automatic Tool Changers | Technical Specifications | Dimensions

6 x 1/4" Air Ports Module | Face Seal (for RQC/RTP-800, -1200, -2400)

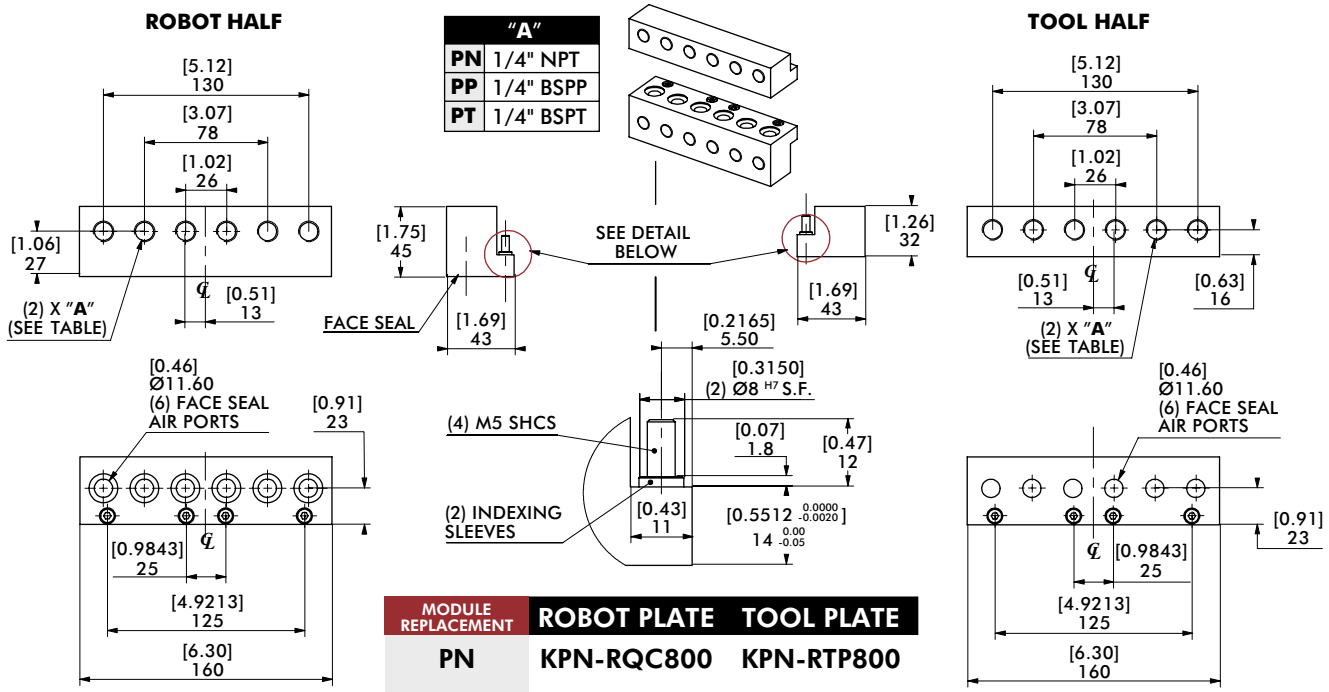

MODULE REPLACEMENT	ROBOT PLATE	TOOL PLATE
PN	KPN-RQC800	KPN-RTP800
PP	KPP-RQC800	KPP-RTP800
PT	KPT-RQC800	KPT-RTP800

Module kits above include:
Couplings, indexing sleeves and hardware.

4 x 3/8" Fluid Ports Module | Non Spilling | Double Shut-Off (for RQC/RTP-800, -1200, -2400)

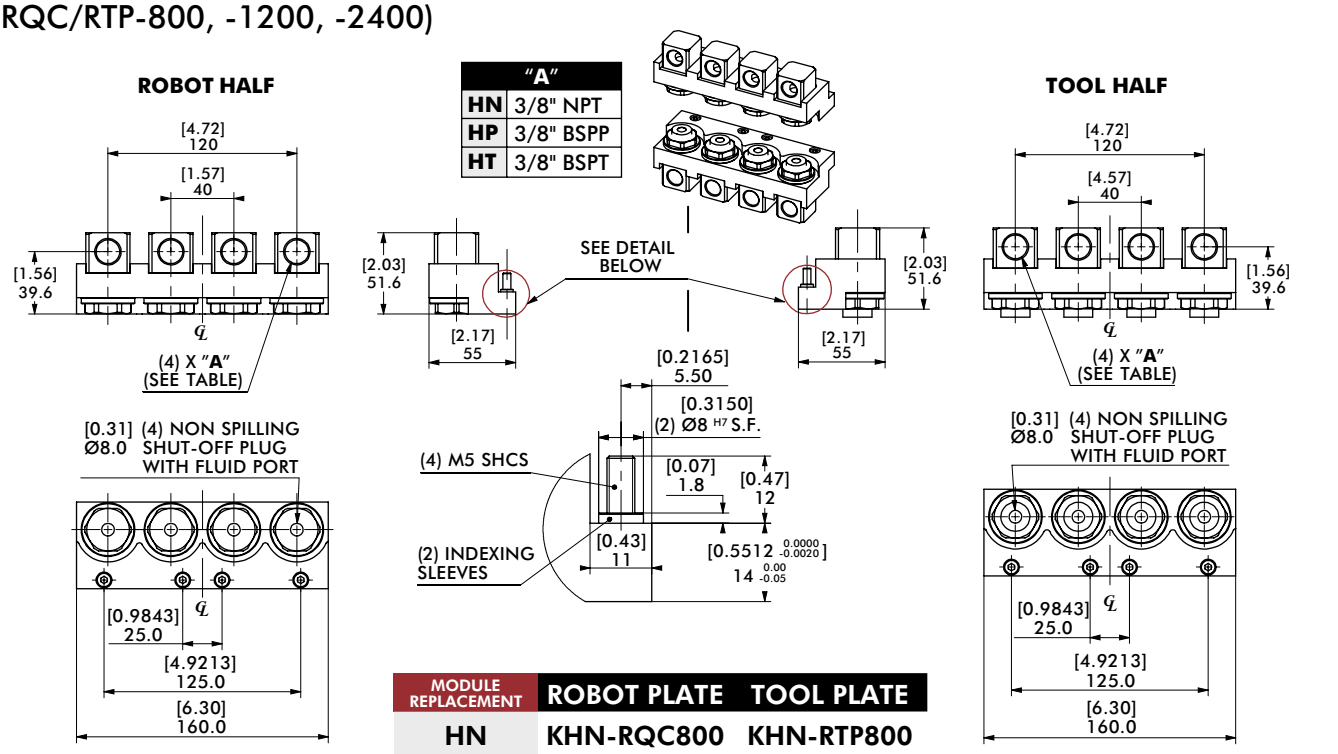

MODULE REPLACEMENT	ROBOT PLATE	TOOL PLATE
HN	KHN-RQC800	KHN-RTP800
HP	KHP-RQC800	KHP-RTP800
HT	KHT-RQC800	KHT-RTP800

Module kits above include:
Couplings, indexing sleeves and hardware.

6 x 1/4" Air Ports Module | Double Shut-Off Flat Face (**SN/SP/ST**) (for RQC/RTP-800, -1200, -2400)

"A"	
SN	1/4" NPT
SP	1/4" BSPP
ST	1/4" BSPT

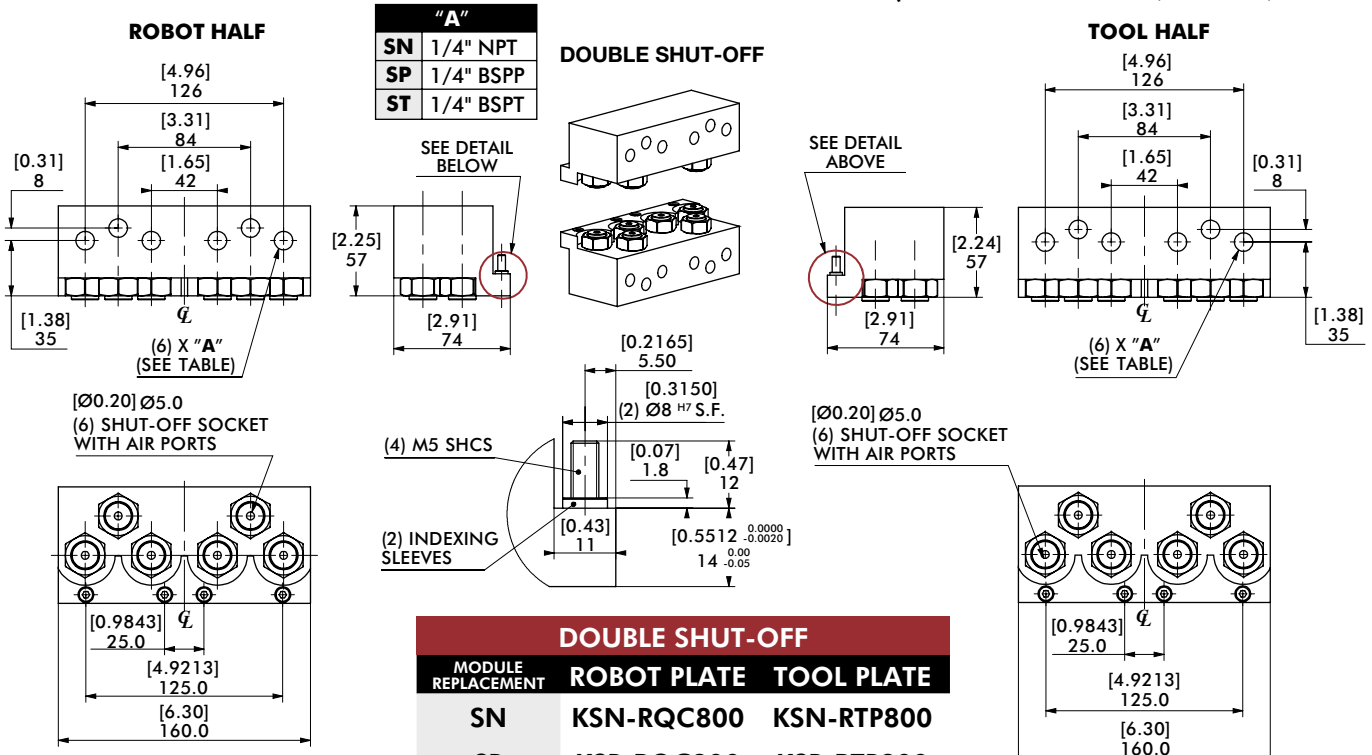

DOUBLE SHUT-OFF		
MODULE REPLACEMENT	ROBOT PLATE	TOOL PLATE
SN	**KSN-RQC800**	**KSN-RTP800**
SP	**KSP-RQC800**	**KSP-RTP800**
ST	**KST-RQC800**	**KST-RTP800**

Module kits above include:
Couplings, indexing sleeves and hardware.

8 x 1/8" Air Ports Module | Face Seal (**FN**) (for RQC/RTP-2400)

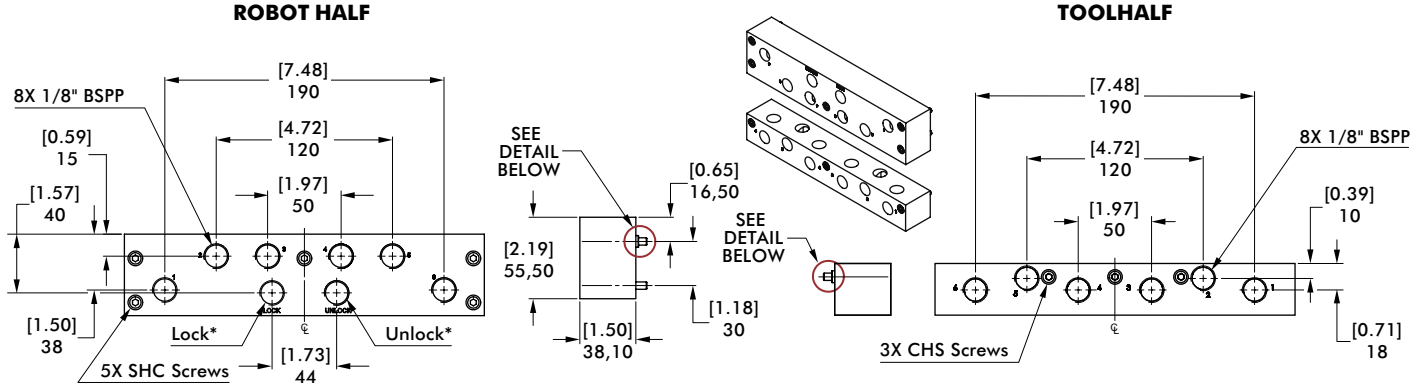

*Air Ports for RQC actuation when module is mounted on A Side

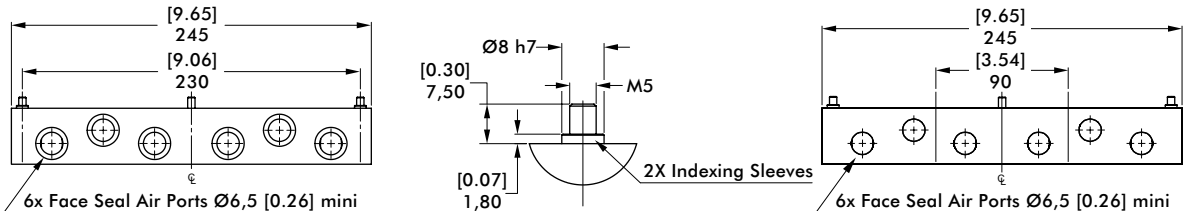

Module kits above include:
Couplings, indexing sleeves and hardware.

MODULE REPLACEMENT	ROBOT PLATE	TOOL PLATE
FN	**KPN-RQC2400**	**KPN-RTP2400**

MANUAL TOOL CHANGERS

Features & Benefits

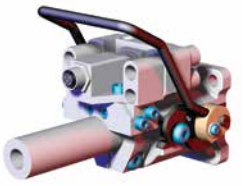

Quick Disconnect for 25mm/1.00 in. Tubes

Housing 4
Air/Electric Connections 6
Bayonet 8
Air/Electric Connections 9



Quick Disconnect for 40mm/1.50 in. Tubes

Housing 10
Air/Electric Connections 13
Bayonet 19
Air/Electric Connections 20



Quick Disconnect for 60mm/2.50 in. Tubes

Housing 26
Air/Electric Connections 27
Bayonet 31
Air/Electric Connections 32



Idle Station 37

Dimensions and technical information are subject to change without notice

Table of Contents

Change Tooling in a Snap
Our manual (shown) or fully automatic Quick Disconnect Tool Changers allow you to quickly switch between various tooling in seconds. Optional integral air ports provide immediate power to your system, eliminates manual re-connection of air lines, and reduces machine downtime.

Single Hand Handle Actuation
To lock into place and release bayonet.

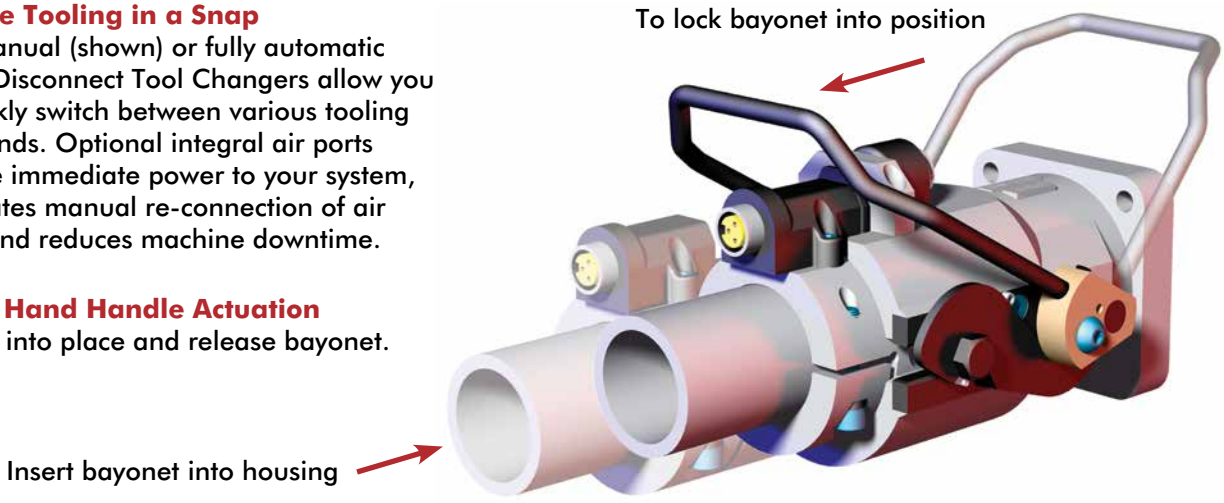

RDN/RDC Features

(Handle in release position)

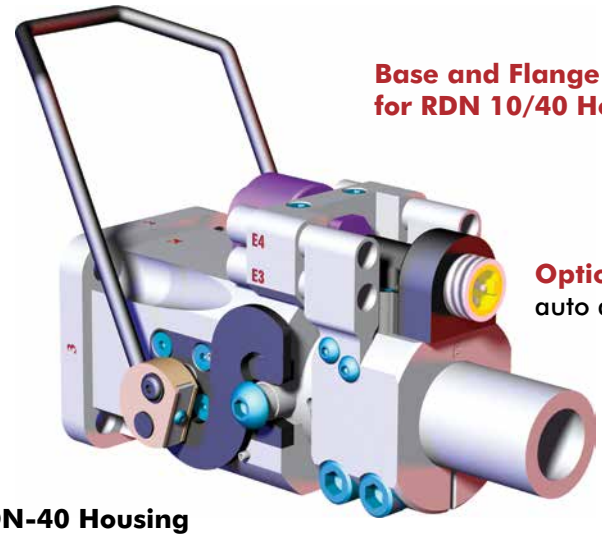

Base and Flange mounting for RDN 10/40 Housing

RDN-40 Housing
RDC-40/15 Bayonet
for Ø40mm/1.50"(in)
Tooling Boom/Tubes

(Handle in locking position)

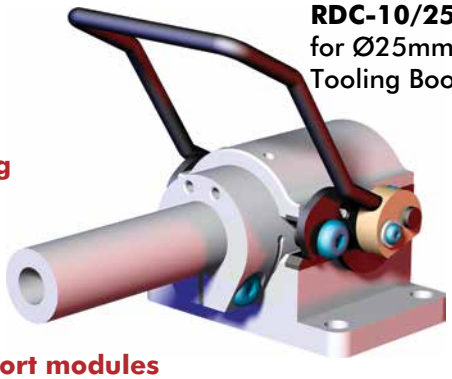

RDN-10 Housing
RDC-10/25M Bayonet
for Ø25mm/1.00"(in)
Tooling Boom/Tubes

Optional air port modules
auto disconnect when handle is released

(Handle in locking position)

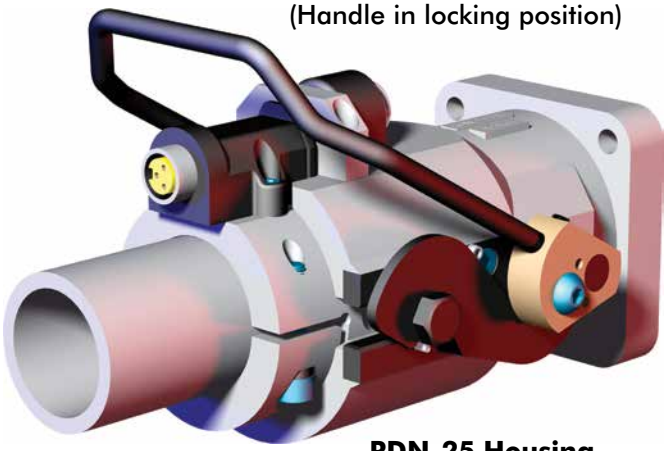

RDN-25 Housing
RDC-60/25 Bayonet
for Ø60mm/2.50"(in)
Tooling Boom/Tubes

Internal urethane bumpers
ensures a tight interface between the robot and tool sides

Air & electrical connections
stay properly sequenced when tool is removed.

Additional electrical connectors available
RDN-40 and RDH electrical connectors must be ordered separately from Housing/Bayonet.

BAYONETS FOR MANUAL TOOL CHANGERS

Overview:

The internal surface of the bayonet is tapered to lock the tubing in the position during hi-torque operations. Tubing must be inserted the proper distance to completely engage the taper.

Procedure:

Part Number	Depth
CPI-RDC-10-1	70mm [2.75 in]
CPI-RDC-25M-1	70mm [2.75 in]
CPI-RDC-15-1	102mm [4.00 in]
CPI-RDC-40-1	102mm [4.00 in]
CPI-RDC-25-2	152mm [6.00 in]
CPI-RDC-60-2	152mm [6.00 in]
CPI-RDC-25-2HT	171mm [6.75 in]

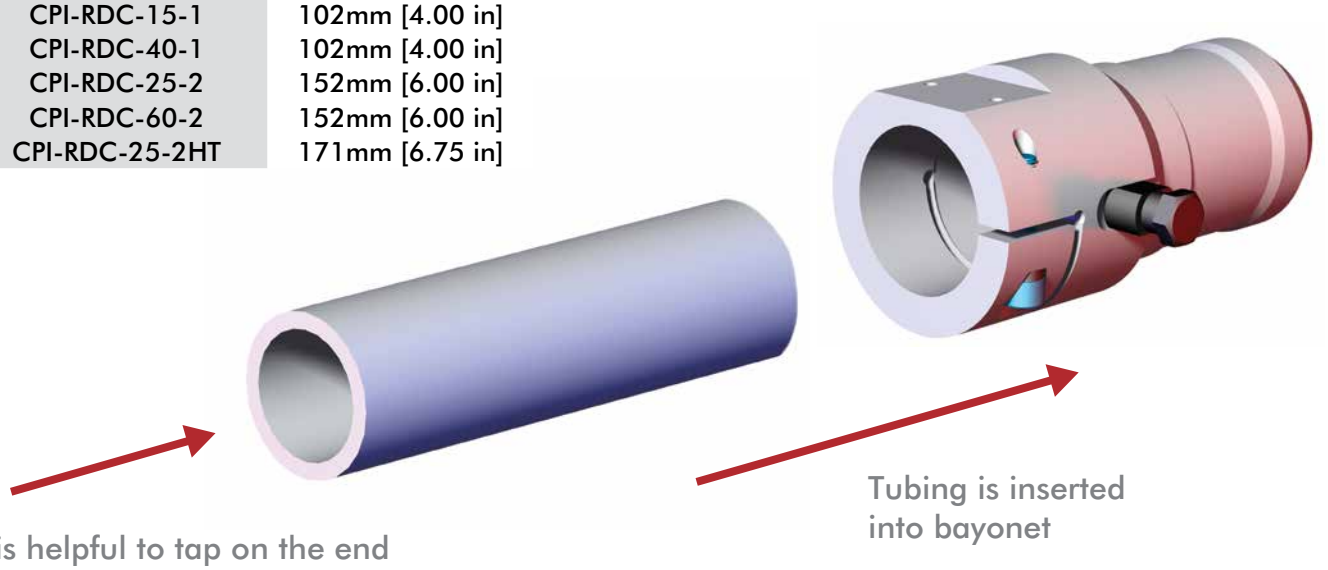

It is helpful to tap on the end of the tubing with a mallet until the tubing is seated firmly against the taper

Tubing is inserted into bayonet

Dimensions and technical information are subject to change without notice

RDN-10 DISCONNECT HOUSINGS

Manual Tool Changers | Flange Style Housing for RDC-10 Series Bayonets | Product Overview

Features:

- 50.8mm [2.00 in.] Sq. Flange Mntg.
- Steel handle actuation allows quick and accurate installation, pulling the bayonet into a fixed position within the housing. This action also engages optional air and electric connectors
- Internal urethane rings eliminate vibration and seat the bayonet securely

Specifications:

Max. Static Product Load:
47 N*m [35 ft-lb]
Material:
Body: Aluminum
Knuckles: Brass
Handle and Hooks: Steel
Inserts: Urethane
Weight:
0.63 kg [1.4 lb]

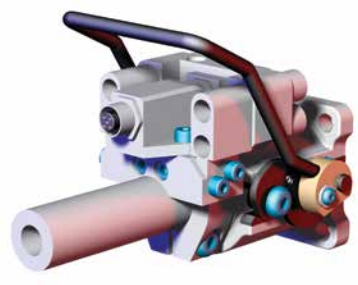

Dimensions

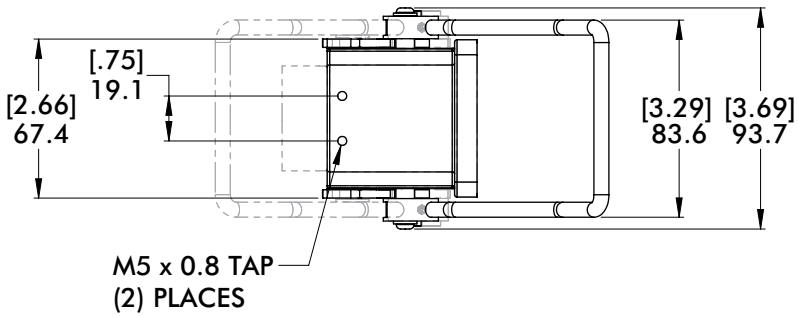



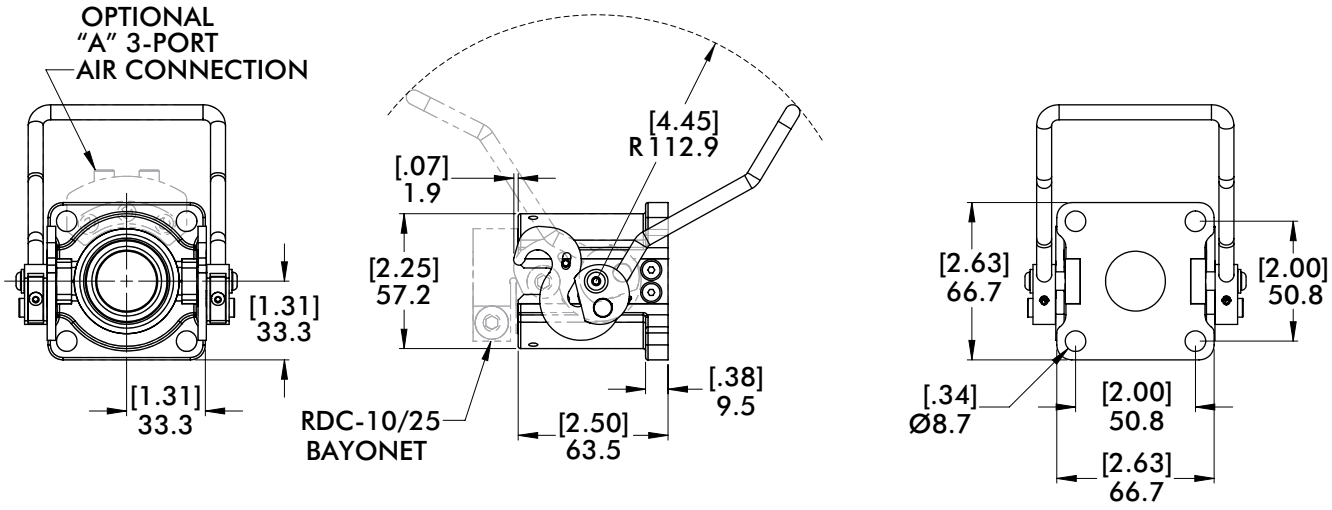

How To Order

	Model	Mounting	Air Port Connection		Electrical Connection
CPI –	RDN-10 –	1F –	4AS	–	5E
	"RDN-10" Ø25mm/1.00" Quick Disconnect Housing	"1F" Flange Type Mounting	"A" (3-Port Connector) "5A" (5-Port Connector) "4AS" (4-Port Connector) (Leave blank for **No Options**)		"5E" (5-Pin Connector) (Only available for "**4AS**" Option)

RDN-10 HOUSINGS

Manual Tool Changers | Base Mount Style for RDC-10 Series Bayonets | Product Overview

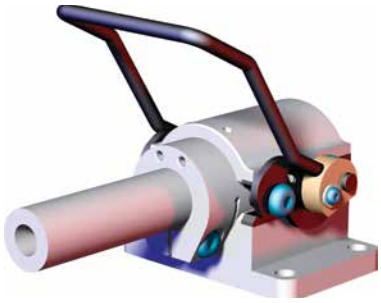

Specifications:

Max. Static Product Load:
47 N*m [35 ft-lb]

Material:
Body: Aluminum
Knuckles: Brass
Handle and Hooks: Steel
Inserts: Urethane

Weight:
0.82 kg [1.8 lb]

Features:

- 47.6mm x 82.6mm [1.88 in. x 3.25 in.] Base Mounting.
- Steel handle actuation allows quick and accurate installation, pulling the bayonet into a fixed position within the housing. This action also engages optional air and electric connectors
- Internal urethane rings eliminate vibration and seat the bayonet securely

Dimensions

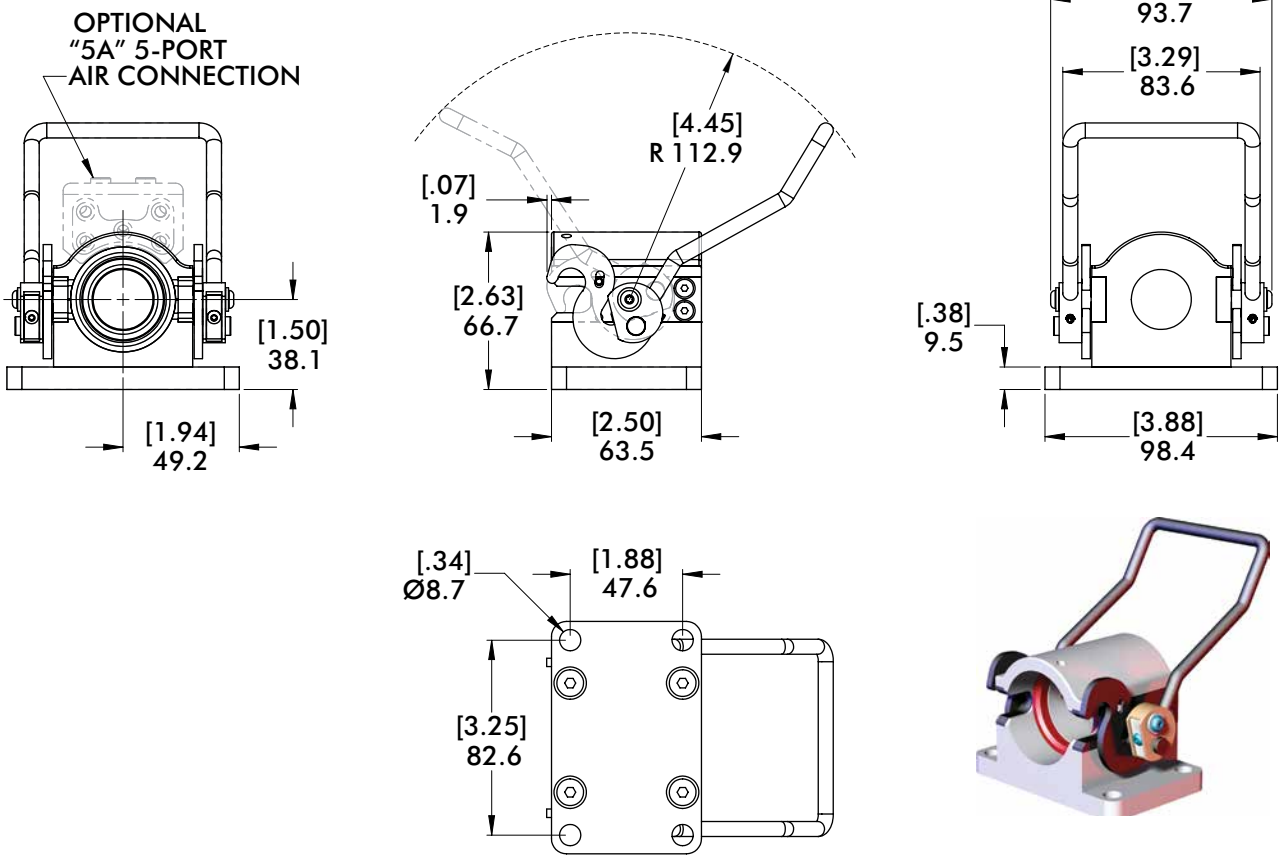

How To Order

	Model	Mounting	Air Port Connection		Electrical Connection
CPI –	RDN-10 –	1B –	4AS	–	5E
	"RDN-10" Ø25mm/1.00" Quick Disconnect Housing	"1B" Base Type Mounting	"A" (3-Port Connector) "5A" (5-Port Connector) "4AS" (4-Port Connector) (Leave blank for **No Options**)		"5E" (5-Pin Connector) (Only available for "**4AS**" Option)

Dimensions and technical information are subject to change without notice

1A 3-Port Air Connection

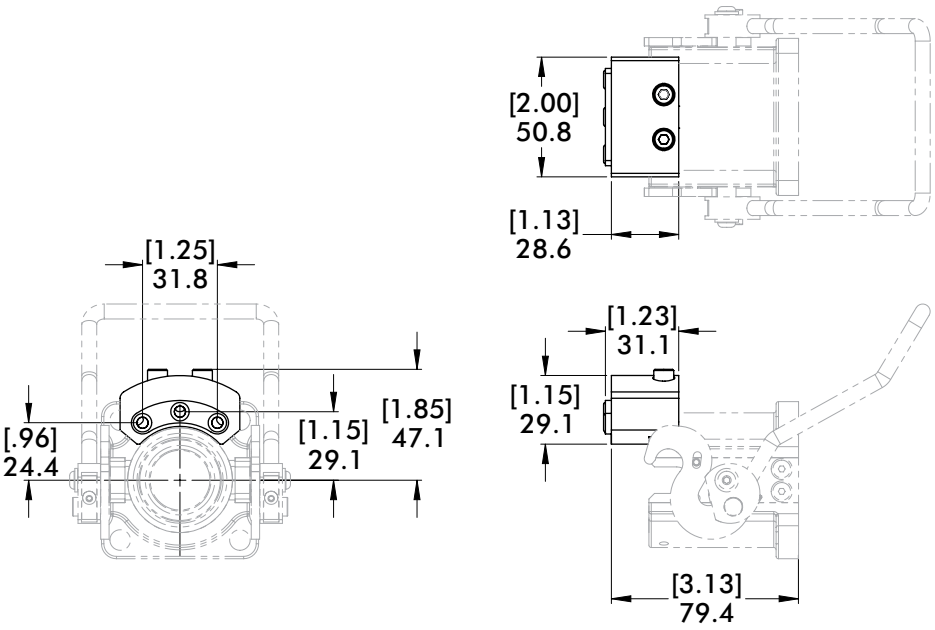



REPLACEMENT PART

RDN-10-8

5A 5-Port Air Connection

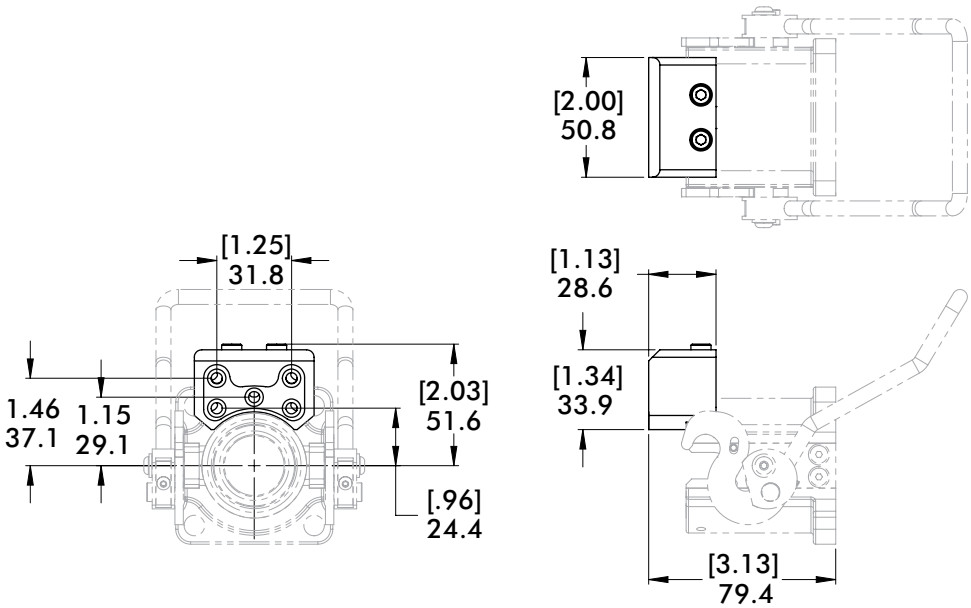



REPLACEMENT PART

RDN-10-9

AIR MANIFOLDS WITH OR WITHOUT ELECTRICAL CONNECTIONS

Manual Tool Changers | RDN-10 Disconnect Series | Dimensions

4AS 4-Port Air Connection with Shutoff

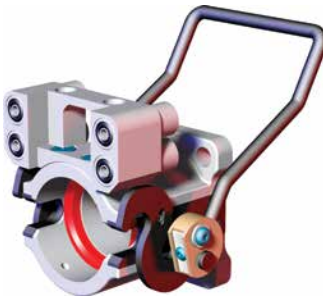

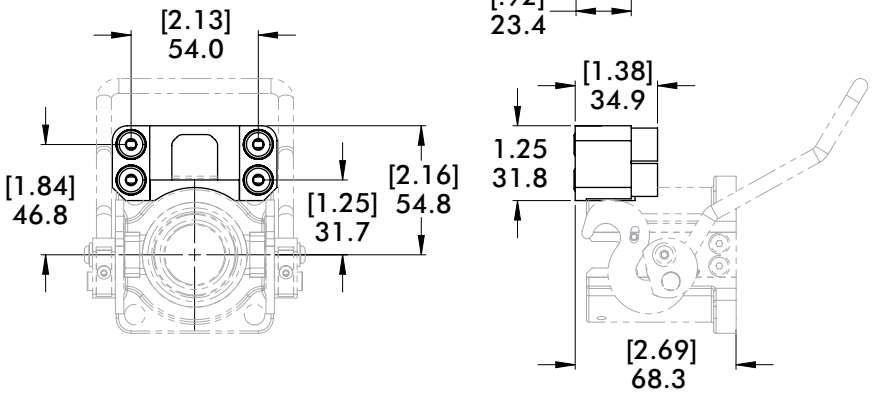

REPLACEMENT PART
CPI-RDN-10-4AS

Air fittings
(4) Needed
RDN-AS-U18

5E 5-Pin Micro Electric Connection

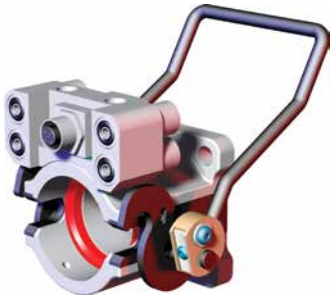

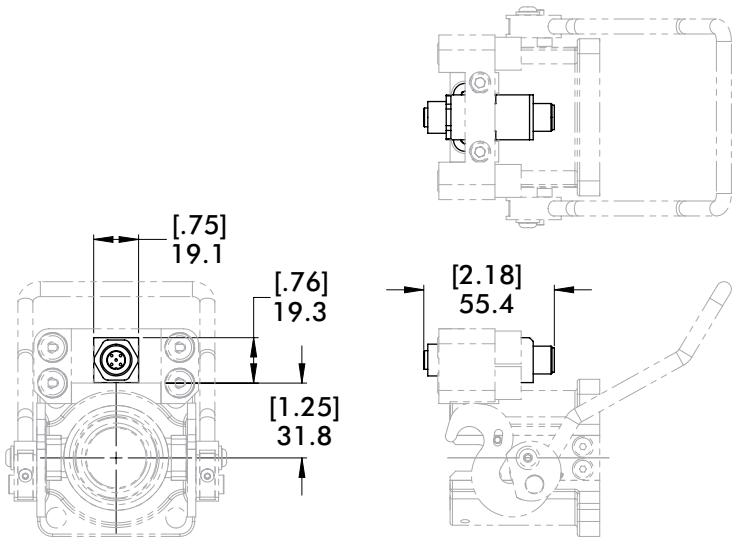

See Page 17 for
Pin Configuration

REPLACEMENT PART
CPI-RDH-F5S-5MCM

Dimensions and technical information are subject to change without notice

RDC-10/25 SERIES BAYONETS

Manual Tool Changers | 25mm or 1.0" Booms | Product Overview

Features:

- Used in conjunction with the Quick Disconnect Housing to provide efficient mode of changing tools manually.
- (2) Hardened alignment pins allows quick and accurate installation into the bayonet.

Specifications:

Max. Static Product Load:
47 N*m [35 ft-lb]
Material:
Body: Aluminum
Pins: Steel
Weight:
0.23 kg [0.5 lb]

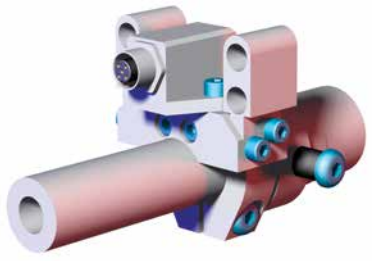

Dimensions

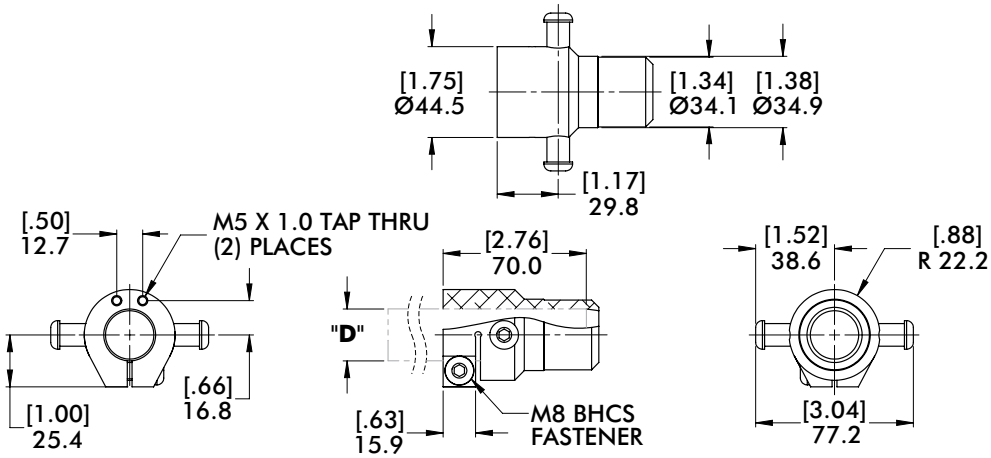



How To Order

CPI –	Model: RDC	– Boom/Tube (Ø) "D": 10	– Air Port Connection: 4AS	–	Electrical Connection: 5E
	"RDC" Quick Disconnect Bayonet	"10" 1.00"(in) "25M" 25mm	"1" No Options "1A" (3-Port Connector) "5A" (5-Port Connector) "4AS" (4-Port Connector-Imperial Only) "1-4AS" (4-Port Connector-Metric Only)		"5E" (5-Pin Connector) (Only available for "4AS or 1-4AS" Options)

1A 3-Port Air Connection

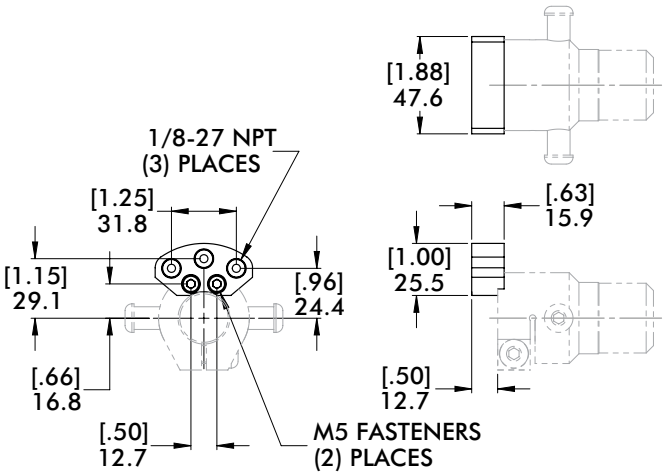



REPLACEMENT PART

RDC-10-3

AIR MANIFOLDS WITH OR WITHOUT ELECTRICAL CONNECTIONS

Manual Tool Changers | RDC-10/25 Series Bayonets | Dimensions

5A 5-Port Air Connection

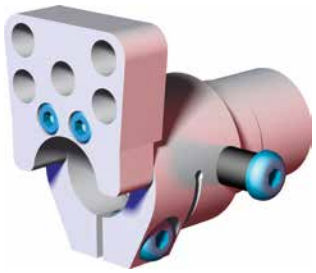

REPLACEMENT PART

RDC-10-5

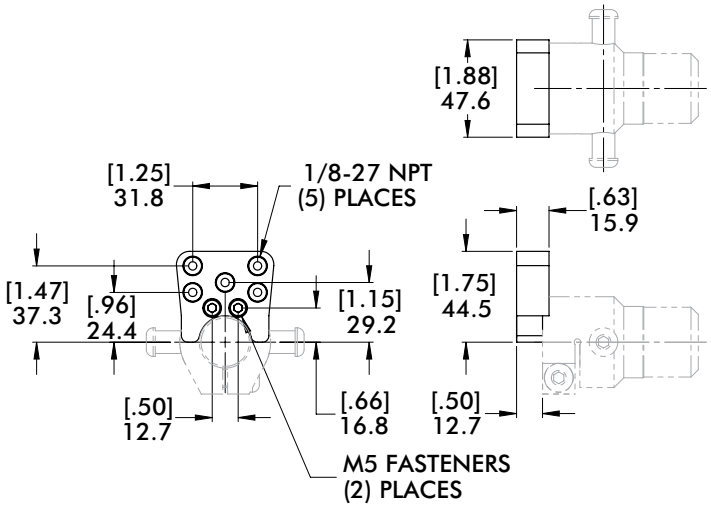

4AS 4-Port Air Connection with Shutoff

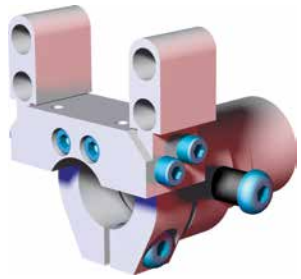

(2) Required

REPLACEMENT PART

RDC-10-4

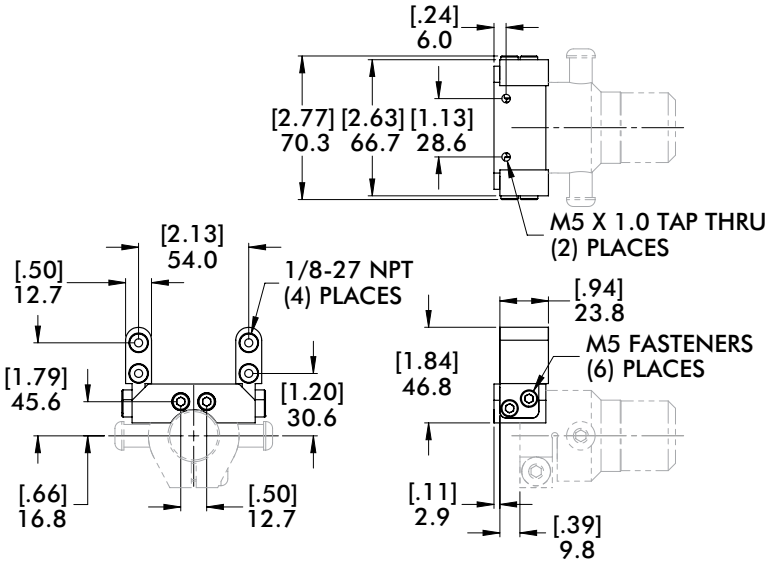

5E 5-Pin Micro Electric Connection

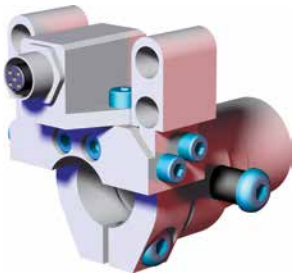

See Page 23 for
Pin Configuration

REPLACEMENT PART

CPI-RDB-M5P-5MCF

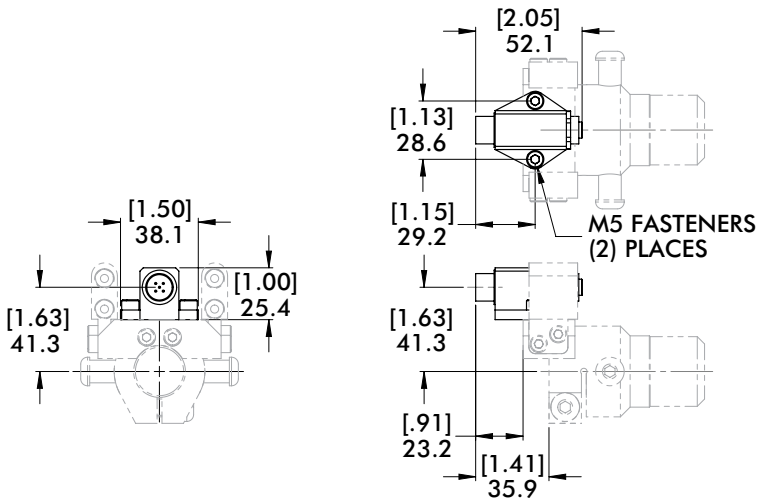

Dimensions and technical information are subject to change without notice

RDN-40 DISCONNECT HOUSINGS

Manual Tool Changers | Flange Style Housing for RDC-40/150 Series Bayonets | Product Overview

Features:

- 60.3mm [2.38 in.] Sq. Flange Mntg.
- Steel handle actuation allows quick and accurate installation, pulling the bayonet into a fixed position within the housing. This action also engages optional air and electric connectors.
- Internal urethane rings eliminate vibration and seat the bayonet securely.

Specifications:

Max. Static Product Load:
305 N*m [225 ft-lb]
Material:
Body: Aluminum
Knuckles: Brass
Handle and Hooks: Steel
Inserts: Urethane
Weight:
1.5 kg [3.3 lb]

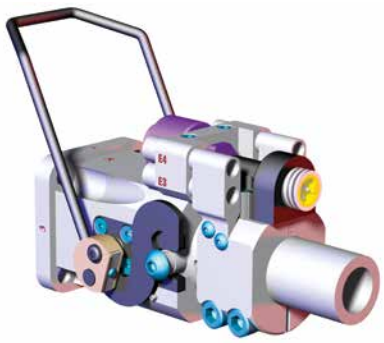

Dimensions

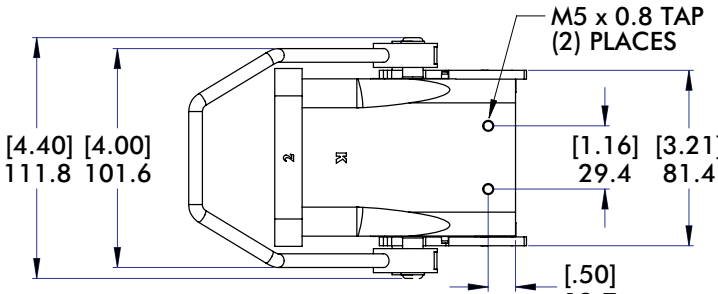



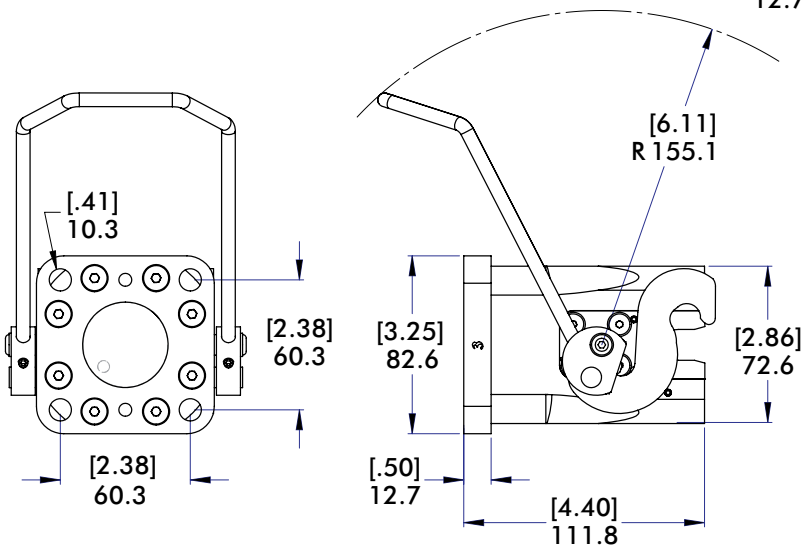

How To Order

CPI	Model	Mounting	Air Port Connection	Key Position	Electrical Connection	Add for "E4" or "E6" Air Port Connection Only
	RDN-40	1F	S4	K2	MC	HF
	"RDN-40" Ø40mm/1.50" Quick Disconnect Housing	"1F" Flange Type Mounting	"S4" (4-Port Internal) "E4" (4-Port External) "E6" (6-Port External) "SE4"(4-Port Int & Ext) (Leave blank for **No Options**)	"K1 (1-4)" "VWK (1-16)" (Leave blank for **No Options**)	"MC" (Micro 5-Pin) "MN" (Mini 3-Pin) (Leave blank for **No Options**)	

RDN-40 BASE MOUNT DISCONNECT HOUSINGS

Manual Tool Changers | Tri-Axis Rail Tooling Example

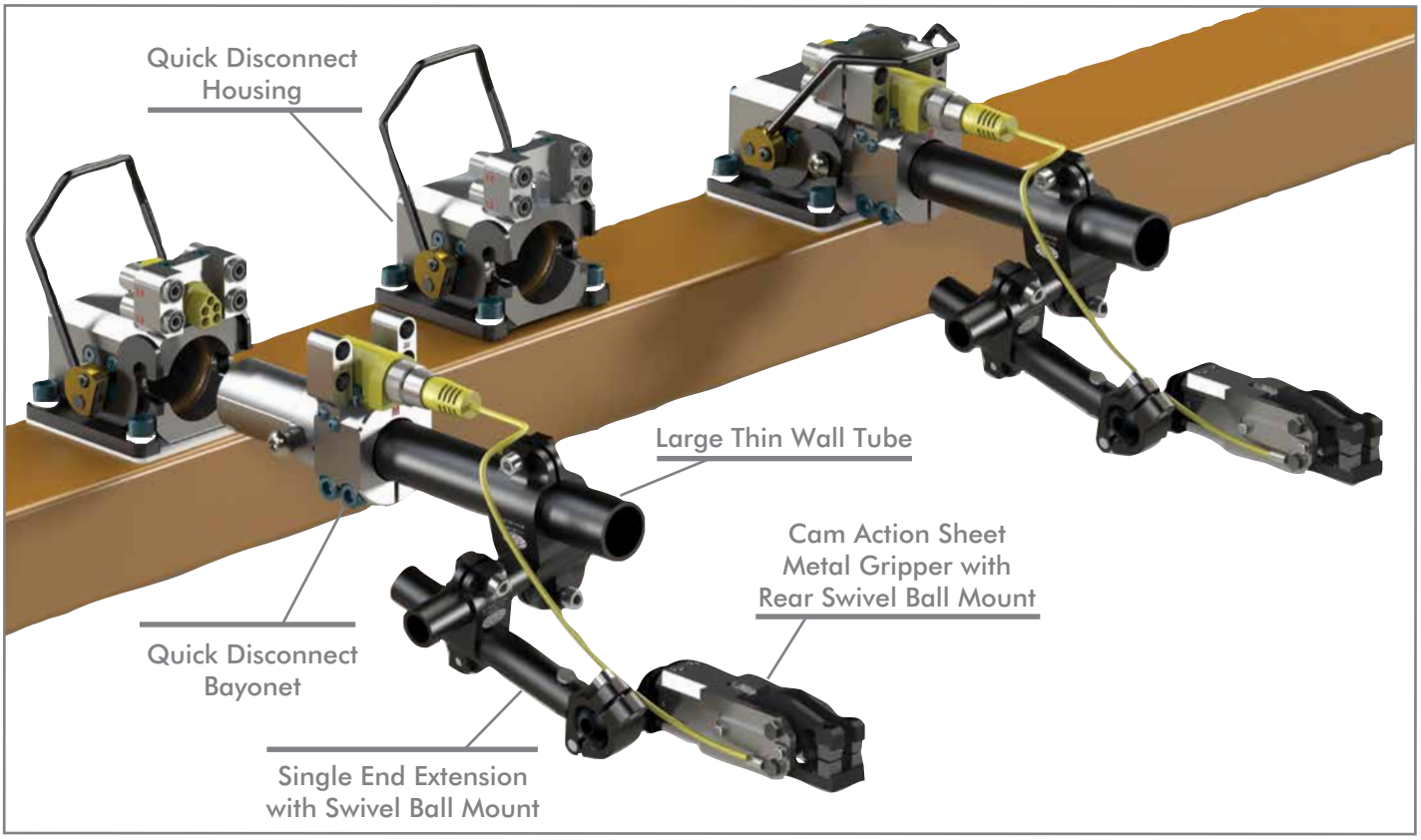

RDN/RDC Series

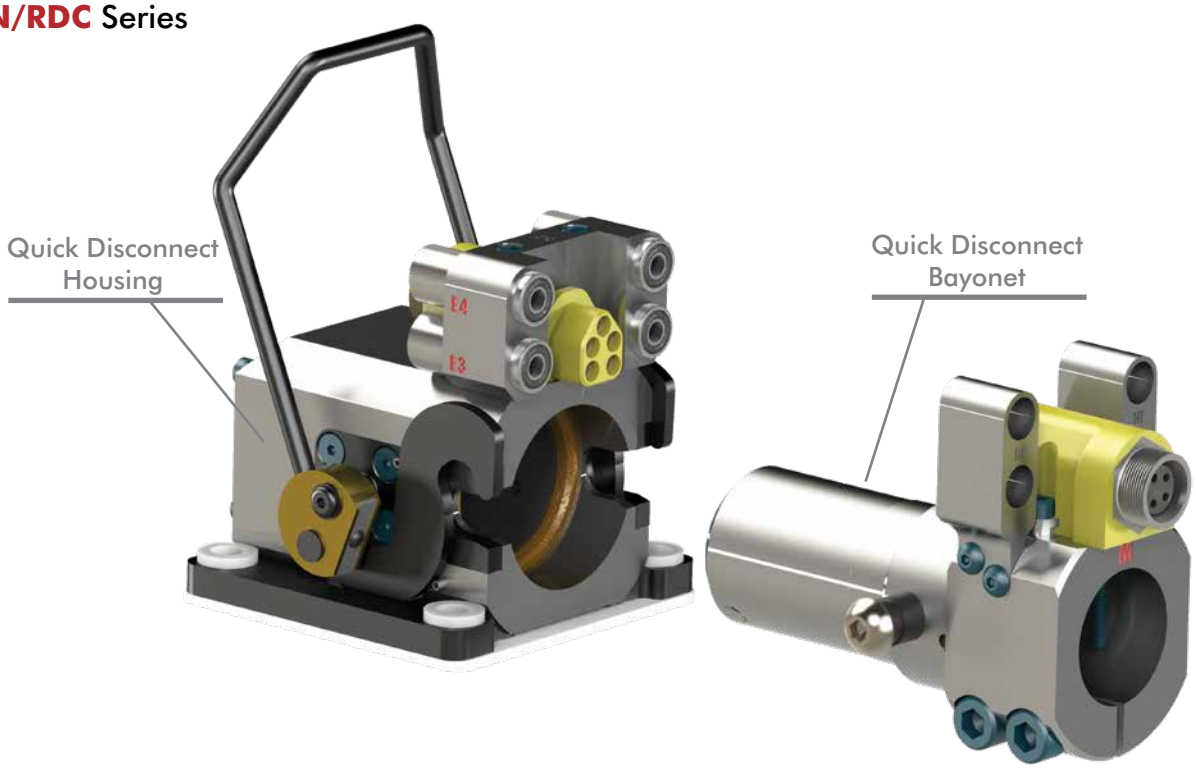

Model Number	Description
CPI-RDN-40-JB-E4-5MNM-HF-INS	Quick Disconnect Housing with 4-Port High Flow Air, 5-Pin Electric, Insulation
CPI-RDC-15-E4-5MNF-HF	Quick Disconnect Bayonet with 4-Port High Flow Air, 5-Pin Electric

Dimensions and technical information are subject to change without notice

RDN-40 DISCONNECT HOUSINGS

Manual Tool Changers | Base Mount Housing for RDC-40/150 Series Bayonets | Product Overview

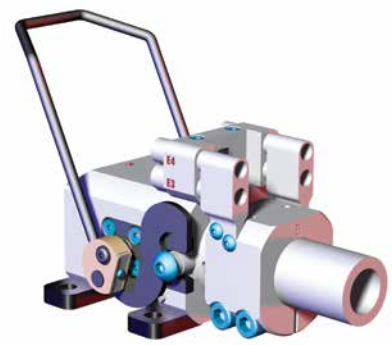

Specifications:

Max. Static Product Load:
305 N*m [225 ft-lb]

Material:
Body: Aluminum
Knuckles: Brass
Handle and Hooks: Steel
Inserts: Urethane

Weight:
1.4 kg [3.1 lb]

Features:

- 70mm x 95.3mm [2.75 in. x 3.75 in.] Base Mounting.
- Steel handle actuation allows quick and accurate installation, pulling the bayonet into a fixed position within the housing. This action also engages optional air and electric connectors.
- Internal urethane rings eliminate vibration and seat the bayonet securely.

Dimensions, How To Order

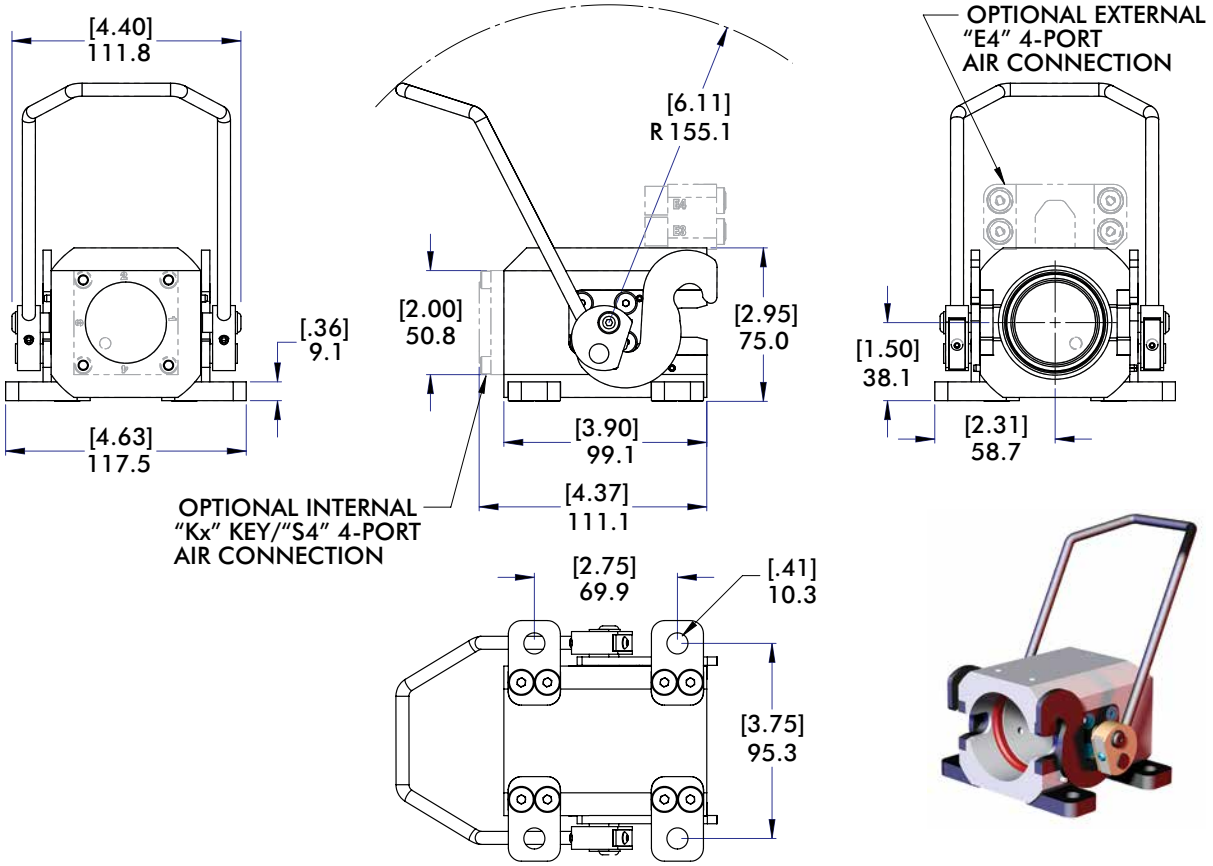

How To Order

CPI – **Model** **RDN-40** – **Mounting** **1B** – **Air Port Connection** **S4** – **Key Position** **K2** – **Electrical Connection** **MC** – **HF**

Add for "**E4**" or "**E6**" Air Port Connection **Only**

Model
- "**RDN-40**" Ø40mm/1.50" Quick Disconnect Housing

Mounting
- "**1B**" Base Type Mounting

Air Port Connection
- "**S4**"
- "**E4**"
- "**E6**"
- "**SE4**"

(Leave blank for **No Options**)

Key Position
- "**K (1-4)**"
- "**VWK (1-16)**"

(Leave blank for **No Options**)

Electrical Connection
- "**MC**" (Micro 5-Pin)
- "**MN**" (Mini 3-Pin)

(Leave blank for **No Options**)

TOOLING ERROR PROOF KEY AND AIR PORTS

Manual Tool Changers | RDN-40 Flange Mount Disconnect Housings | Dimensions

S4 4-Port Internal Air Connection for Base Style Mounting

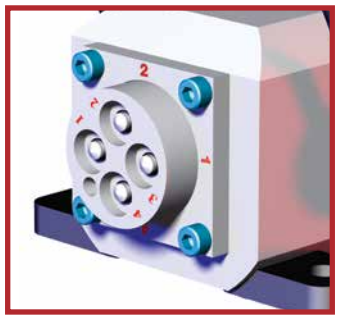

REPLACEMENT PART
RDN-40-10-IAB

Dowels
(1) Needed
M6 x 25mm

Air fittings
(4) Needed
RDN-SAS-U18

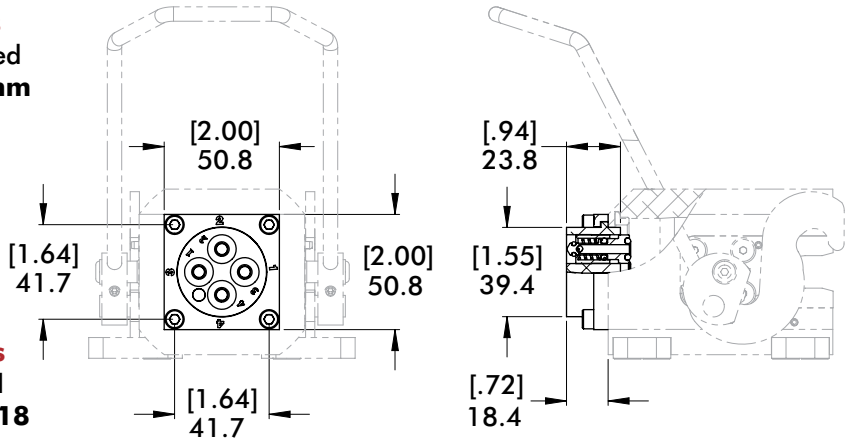

Kx Locating Key for Base Style Mounting

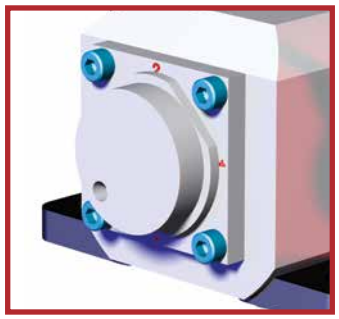

REPLACEMENT PART
RDN-40-10-IKB

Dowels
(1) Needed
M6 x 25mm

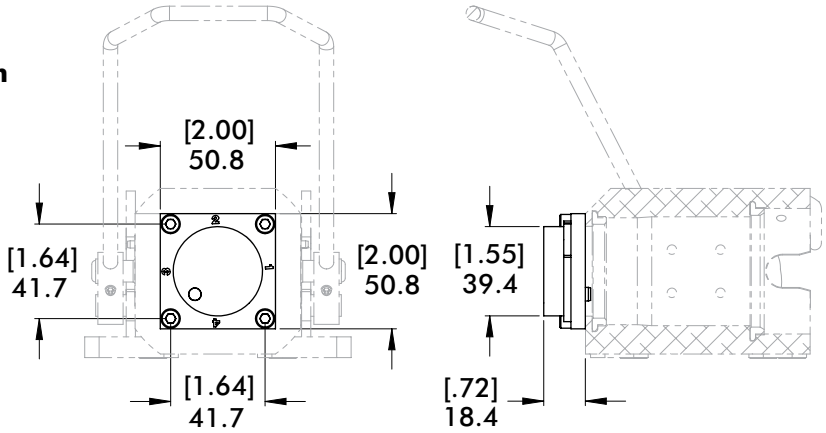

S4 and Kx Internal Key Position for Base Style Mounting

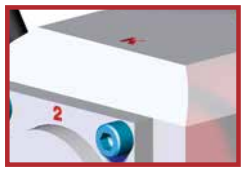

BASE MOUNT RING
(1) Needed
RDN-40-3-MR

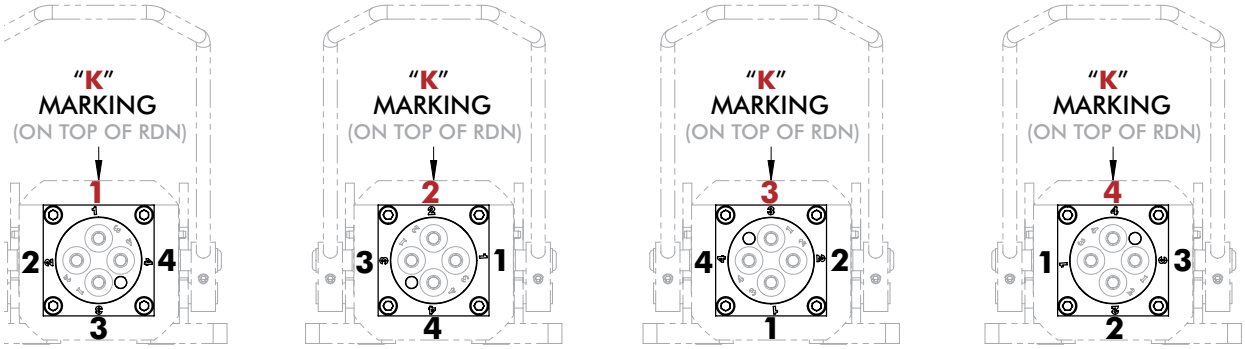

"K1" POSITION | "K2" POSITION | "K3" POSITION | "K4" POSITION

Dimensions and technical information are subject to change without notice

TOOLING ERROR PROOF KEY AND AIR PORTS

S4 4-Port Internal Air Connection for Flange Style Mounting

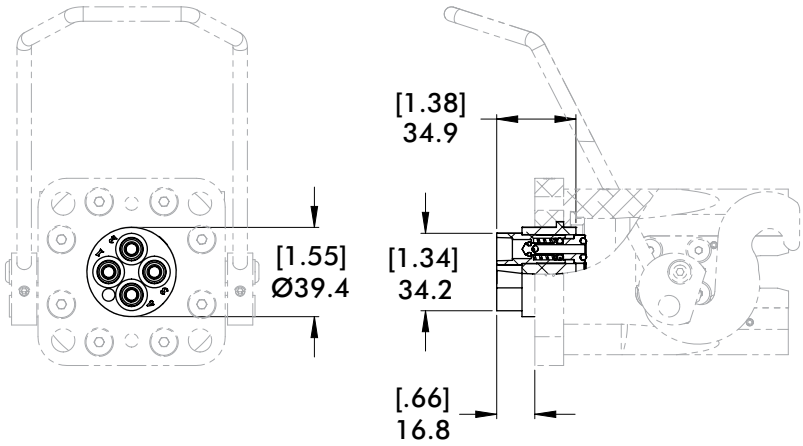

Dowels
(1) Needed
M6 x 25mm

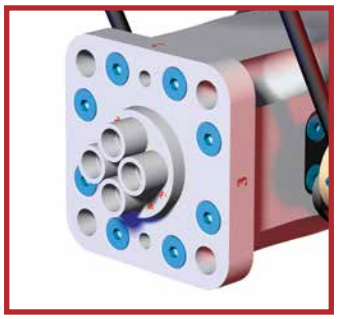

Air fittings
(4) Needed
RDN-AS-U18

REPLACEMENT PART
RDN-40-10-IAB

Kx Locating Key for Flange Style Mounting

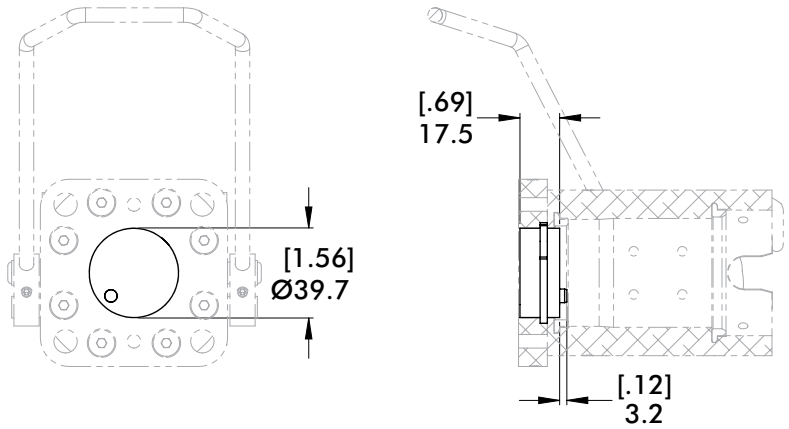

Dowels
(1) Needed
M6 x 25mm



REPLACEMENT PART
RDN-40-10-IKB

S4 and Kx Internal Key Position for Flange Style Mounting

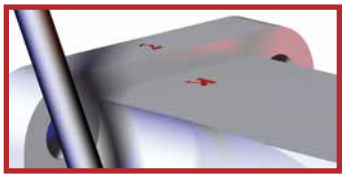

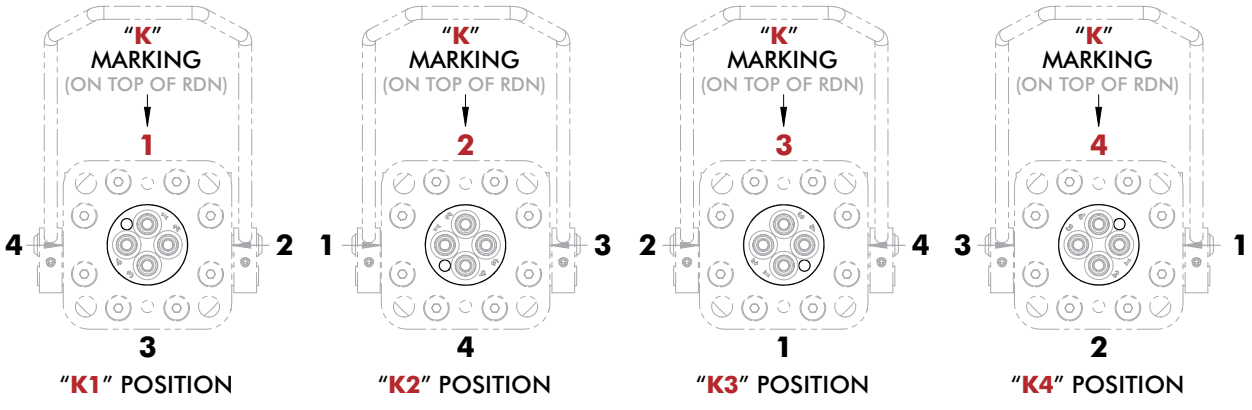

TOOLING ERROR PROOF KEY POSITIONS

Manual Tool Changers | Key Position Callout Chart

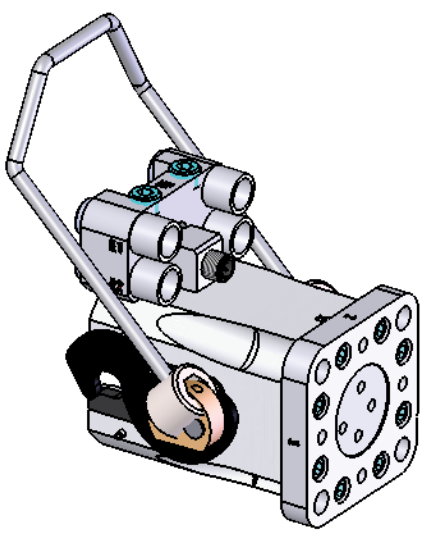

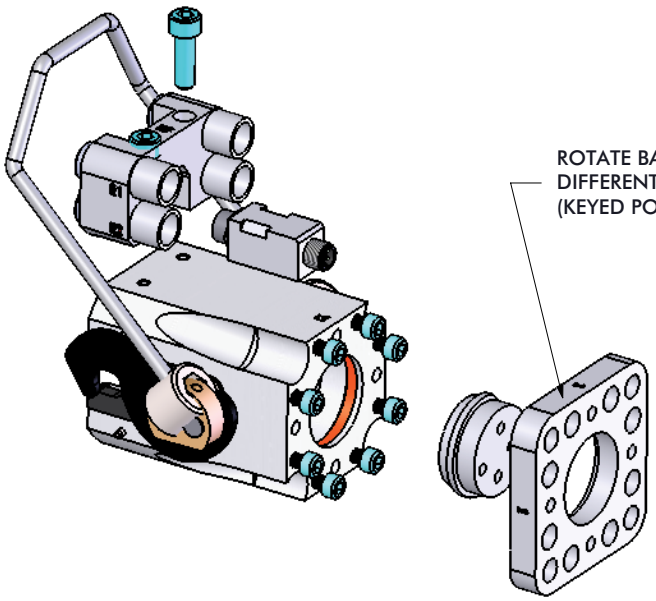

VIEWED FROM FRONT OF HOUSING

	POSITION #1	POSITION #2	POSITION #3	POSITION #4
DOWEL IN HOLE A	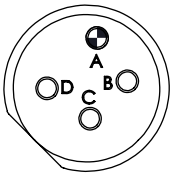 VWK1	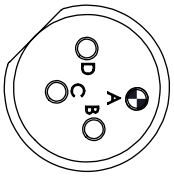 VWK5	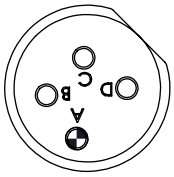 VWK9	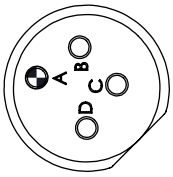 VWK13
DOWEL IN HOLE B	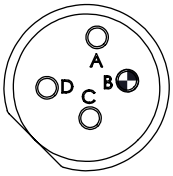 VWK2	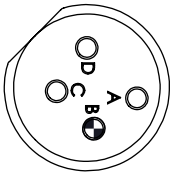 VWK6	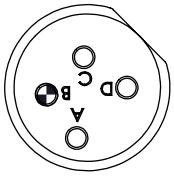 VWK10	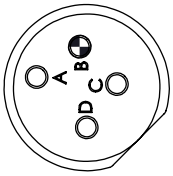 VWK14
DOWEL IN HOLE C	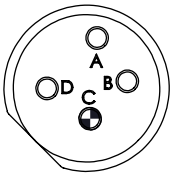 VWK3	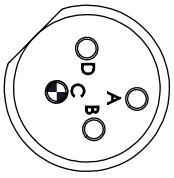 VWK7	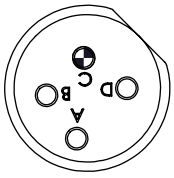 VWK11	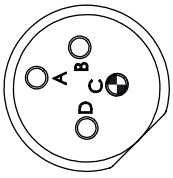 VWK15
DOWEL IN HOLE D	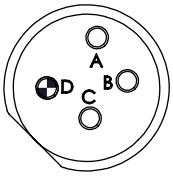 VWK4	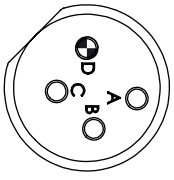 VWK8	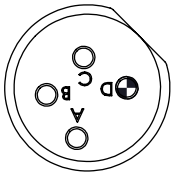 VWK12	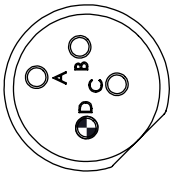 VWK16

Dimensions and technical information are subject to change without notice

E4 4-Port External Air Connection

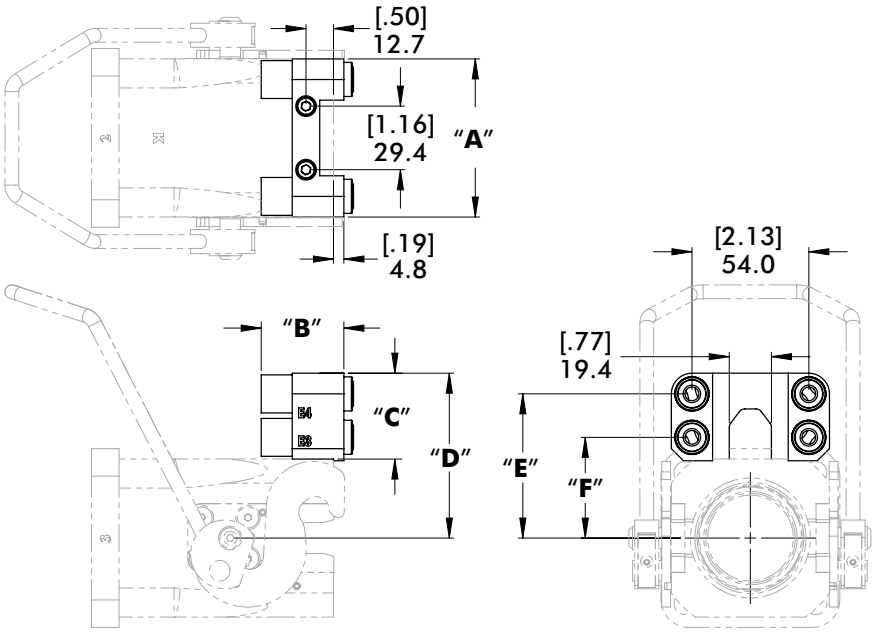

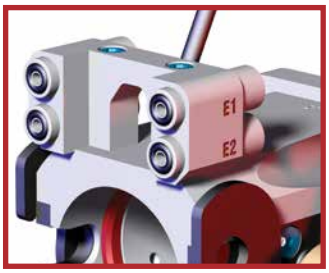

Air fittings
(4) Included
RDN-AS-U18-Standard
RDN-AS-U14-High Flow

ORDER OPTION	REPLACEMENT PART	"A"	"B"	"C"	"D"	"E"	"F"	WEIGHT
"E4" (Standard High Flow)	**CPI-RDN-40-4AS-HF**	[2.88] 73.0	[1.50] 38.1	[1.56] 39.6	[3.00] 76.1	[2.62] 66.6	[1.83] 46.5	[0.38 lb] 0.23 kg
(Replacement for "**E4**" Legacy Applications only)	**CPI-RDN-40-4AS**	[2.75] 69.9	[1.38] 34.9	[1.22] 31.0	[2.66] 67.5	[2.34] 59.5	[1.75] 44.4	[0.23 lb] 0.10 kg

E6 6-Port External Air Connection

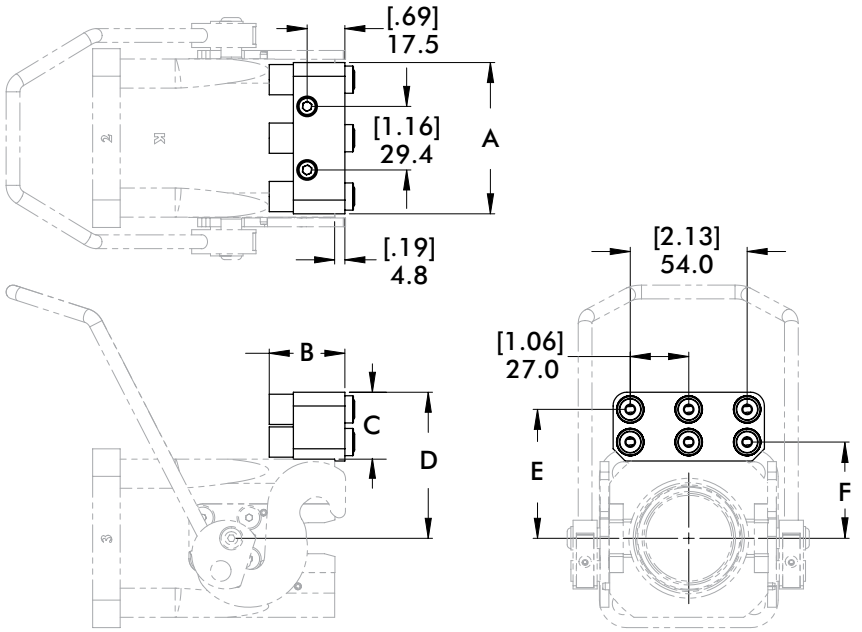

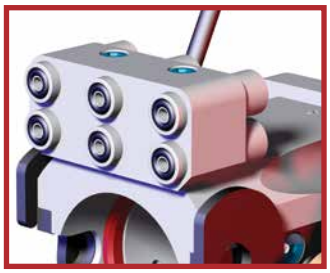

Air fittings
(6) Included
RDN-AS-U18-Standard
RDN-AS-U14-High Flow

ORDER OPTION	REPLACEMENT PART	"A"	"B"	"C"	"D"	"E"	"F"	WEIGHT
"E6" (Standard High Flow)	**CPI-RDN-40-10-6P-HF**	[3.00] 76.2	[1.5] 38.1	[1.59] 40.5	[3.03] 76.9	[2.69] 68.3	[1.87] 47.5	[0.54 lb] 0.25 kg
(Replacement for "**E6**" Legacy Applications only)	**RDN-40-10-6AS**	[2.75] 69.9	[1.38] 34.9	[1.22] 31	[2.66] 67.5	[2.43] 59.5	[1.75] 44.4	[0.37 lb] 0.17 kg

ELECTRICAL CONNECTIONS

Manual Tool Changers | RDN-40 Series Disconnect Housings | Dimensions

MC 5-Pin Micro Electric Connection

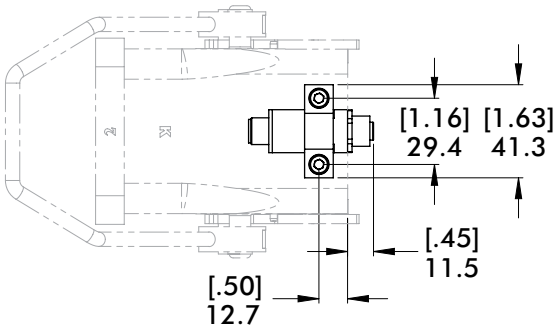

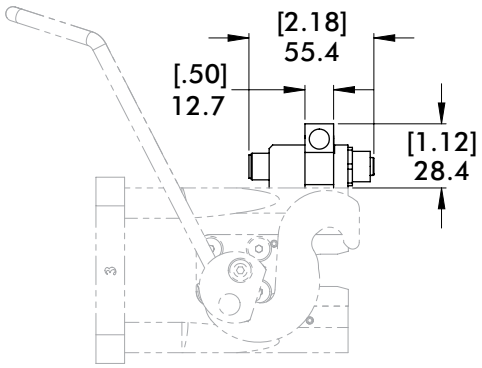

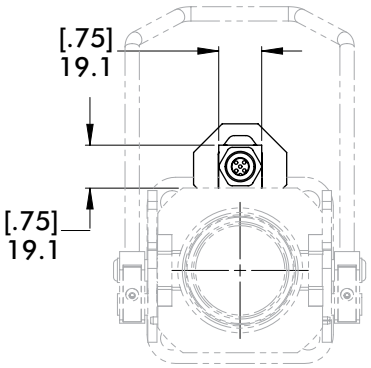

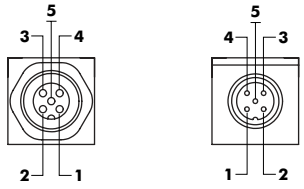

SOCKET #1	PIN #1
SOCKET #2	PIN #2
SOCKET #3	PIN #3
SOCKET #4	PIN #4
SOCKET #5	PIN #5

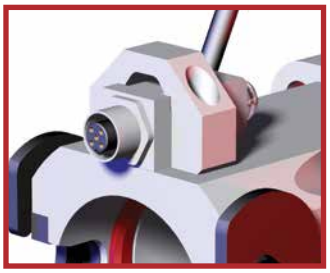

Part Number	
Plug & Strap	CPI-RDH-F5S-5MCM
Plug	RDH-F5S-5MCM
Strap	540-22005

MN 3-Pin Mini Electric Connection

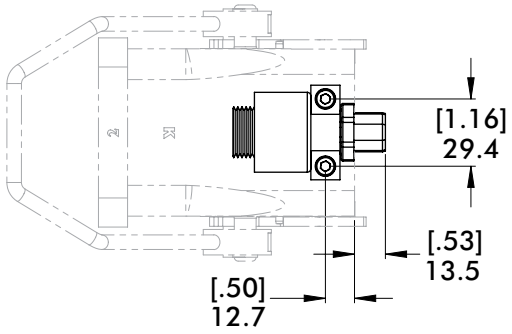

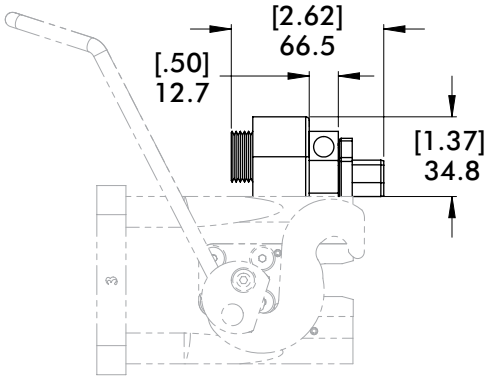

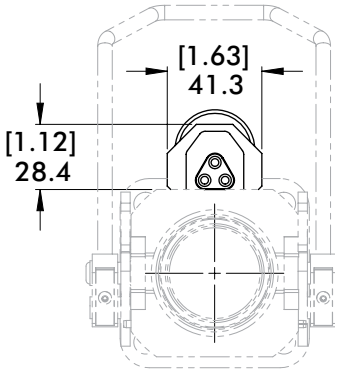

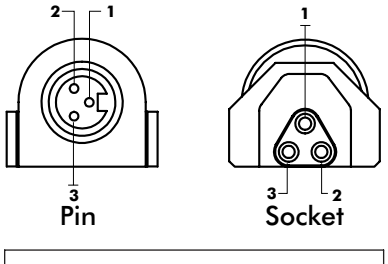

SOCKET #1	PIN #1
SOCKET #2	PIN #2
SOCKET #3	PIN #3

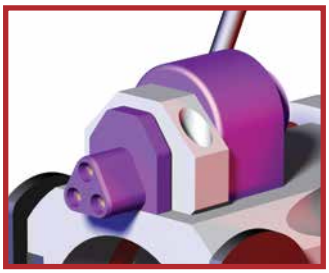

REPLACEMENT PART
CPI-TTH-F3S-3B3

Dimensions and technical information are subject to change without notice

ELECTRICAL CONNECTIONS

Manual Tool Changers | RDN-40 Series Disconnect Housings | Dimensions

5-Pin Mini Electric Connection

CPI-RDN-40-F5S-3MNM

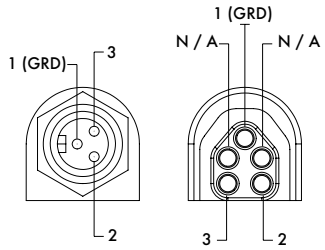

Pin Socket

SOCKET #1	GREEN	PIN #1
SOCKET #2	BLACK	PIN #2
SOCKET #3	WHITE	PIN #3
N / A		
N / A		

PLUG COLOR: BLACK

CPI-RDN-40-F5S-4MNM

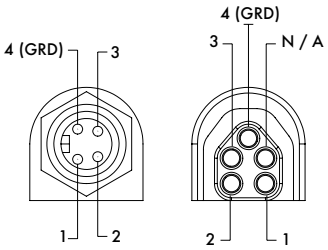

Pin Socket

SOCKET #1	BLACK	PIN #1
SOCKET #2	WHITE	PIN #2
SOCKET #3	RED	PIN #3
SOCKET #4	GREEN	PIN #4
N / A		

PLUG COLOR: GREEN

CPI-RDN-40-F5S-5MNM

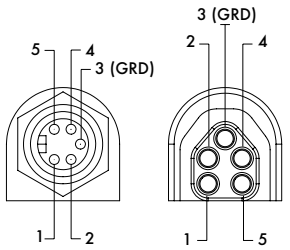

Pin Socket

SOCKET #1	WHITE	PIN #1
SOCKET #2	RED	PIN #2
SOCKET #3	GREEN	PIN #3
SOCKET #4	ORANGE	PIN #4
SOCKET #5	BLACK	PIN #5

PLUG COLOR: YELLOW

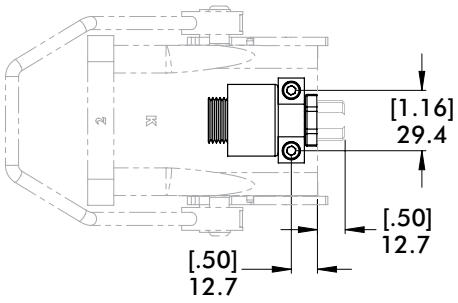

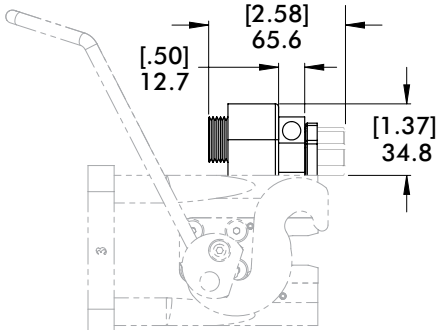

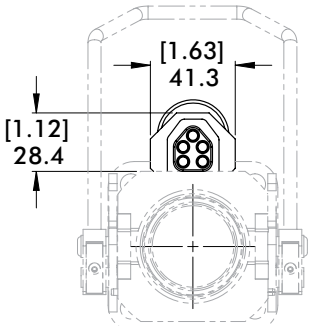

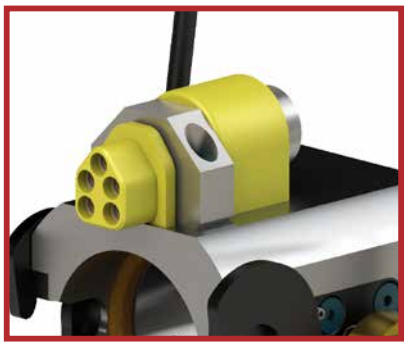

Strap not included

10-Pin Amphenol

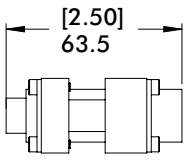

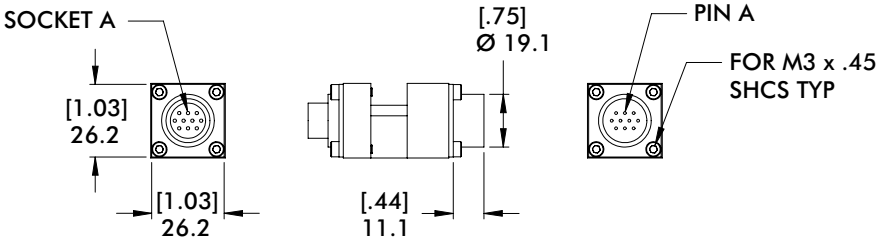



REPLACEMENT PART

CPI-RDN-40-5-10

RDC SERIES BAYONET

Manual Tool Changers | 40mm / 1.50" Diameter Booms | Product Overview

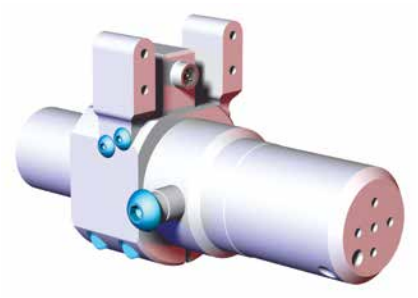

Features:

- Used in conjunction with the Quick Disconnect Housing to provide efficient mode of changing tools manually.
- (2) Hardened alignment pins allows quick and accurate installation into the housing.
- Optional internal key positioning prevents bayonet from being inserted in the wrong orientation.

Specifications:

Max. Static Product Load:
305 N*m [225 ft-lb]
Material:
Body: Aluminum
Pins: Steel
Weight:
0.69 kg [3.5 lb]

Dimensions

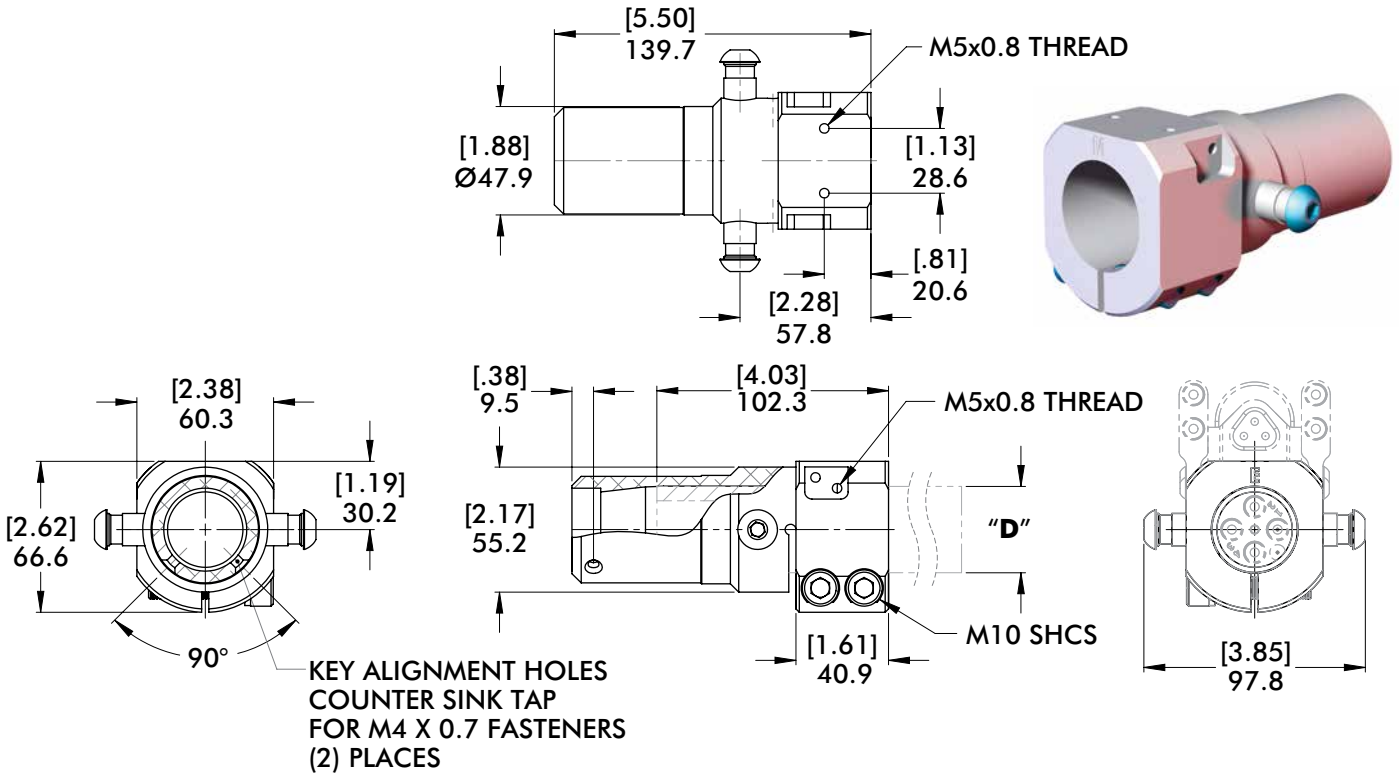

How To Order

Add for "**E4**" or "**E6**" Air Port Connection **Only**

	Model	**Boom/Tube (Ø) "D"**	**Air Port Connection**	**Key Position**	**Electrical Connection**	
CPI –	**RDC** –	**40** –	**S4** –	**K1** –	**MC** –	**HF**
	"**RDC**" Quick Disconnect Bayonet	"**1510**" 1.00" (in) "**15**" 1.50" (in) "**40**" 40mm Add "-**1**" after Boom/Tube (Ø) for **No Options**	"**S4**" (4-Port Internal) "**E4**" (4-Port External) "**E6**" (6-Port External) "**SE4**" (4-Port Int & Ext) (Leave blank for **No Options**)	"**K (1-4)**" "**VWK (1-16)**" (Leave blank for **No Options**)	"**MC**" (Micro 5-Pin) "**MN**" (Mini 3-Pin) (Leave blank for **No Options**)	

Dimensions and technical information are subject to change without notice

TOOLING ERROR PROOF KEYS

S4 4-Port Internal Air Connection and Kx Locating Key

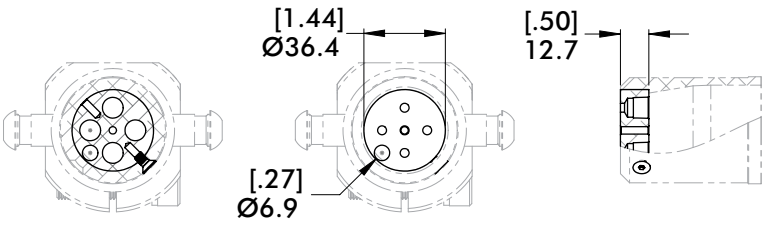

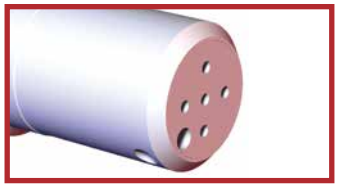

"S4" 4-Port Internal Air Connection

REPLACEMENT PART
RDC-40-4-IAB

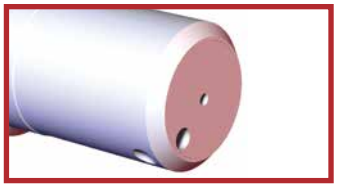

"Kx" Locating Key
(x) Refers to Position

REPLACEMENT PART
RDC-40-4-IKB

S4 and Kx Internal Key Position

(ON TOP OF RDC)

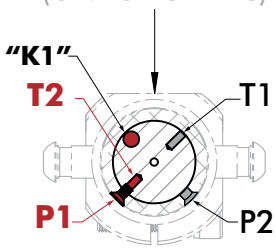

"K1" POSITION FASTENER IN (P1/T2)

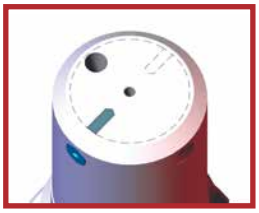

(ON TOP OF RDC)

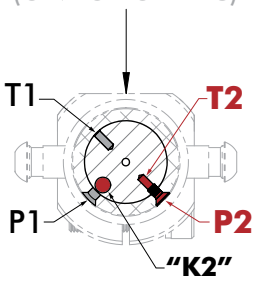

"K2" POSITION FASTENER IN (P2/T2)

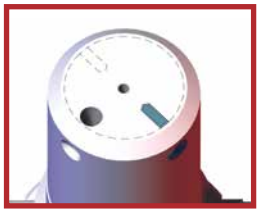

(ON TOP OF RDC)

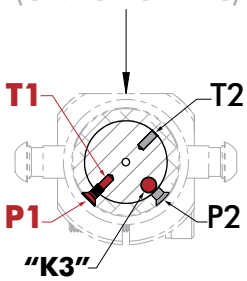

"K3" POSITION FASTENER IN (P1/T1)



(ON TOP OF RDC)

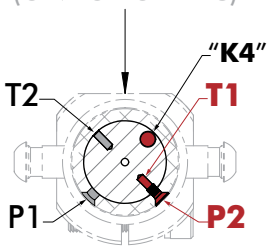

"K4" POSITION FASTENER IN (P2/T1)



TOOLING ERROR PROOF KEY POSITIONS

Manual Tool Changers | RDC-40/150 Series Bayonets

ASSEMBLY #	KEY POSITION #	KEY BLOCK #	INSERT	POSITION
CPI-RDC-40-E4-VWK1-MC-HF	VWK1	RDC-40-4-IKB-16-KA1-4	A	1
CPI-RDC-40-E4-VWK2-MC-HF	VWK2	RDC-40-4-IKB-16-KB1-4	B	1
CPI-RDC-40-E4-VWK3-MC-HF	VWK3	RDC-40-4-IKB-16-KC1-4	C	1
CPI-RDC-40-E4-VWK4-MC-HF	VWK4	RDC-40-4-IKB-16-KD1-4	D	1
CPI-RDC-40-E4-VWK5-MC-HF	VWK5	RDC-40-4-IKB-16-KA1-4	A	2
CPI-RDC-40-E4-VWK6-MC-HF	VWK6	RDC-40-4-IKB-16-KB1-4	B	2
CPI-RDC-40-E4-VWK7-MC-HF	VWK7	RDC-40-4-IKB-16-KC1-4	C	2
CPI-RDC-40-E4-VWK8-MC-HF	VWK8	RDC-40-4-IKB-16-KD1-4	D	2
CPI-RDC-40-E4-VWK9-MC-HF	VWK9	RDC-40-4-IKB-16-KA1-4	A	3
CPI-RDC-40-E4-VWK10-MC-HF	VWK10	RDC-40-4-IKB-16-KB1-4	B	3
CPI-RDC-40-E4-VWK11-MC-HF	VWK11	RDC-40-4-IKB-16-KC1-4	C	3
CPI-RDC-40-E4-VWK12-MC-HF	VWK12	RDC-40-4-IKB-16-KD1-4	D	3
CPI-RDC-40-E4-VWK13-MC-HF	VWK13	RDC-40-4-IKB-16-KA1-4	A	4
CPI-RDC-40-E4-VWK14-MC-HF	VWK14	RDC-40-4-IKB-16-KB1-4	B	4
CPI-RDC-40-E4-VWK15-MC-HF	VWK15	RDC-40-4-IKB-16-KC1-4	C	4
CPI-RDC-40-E4-VWK16-MC-HF	VWK16	RDC-40-4-IKB-16-KD1-4	D	4

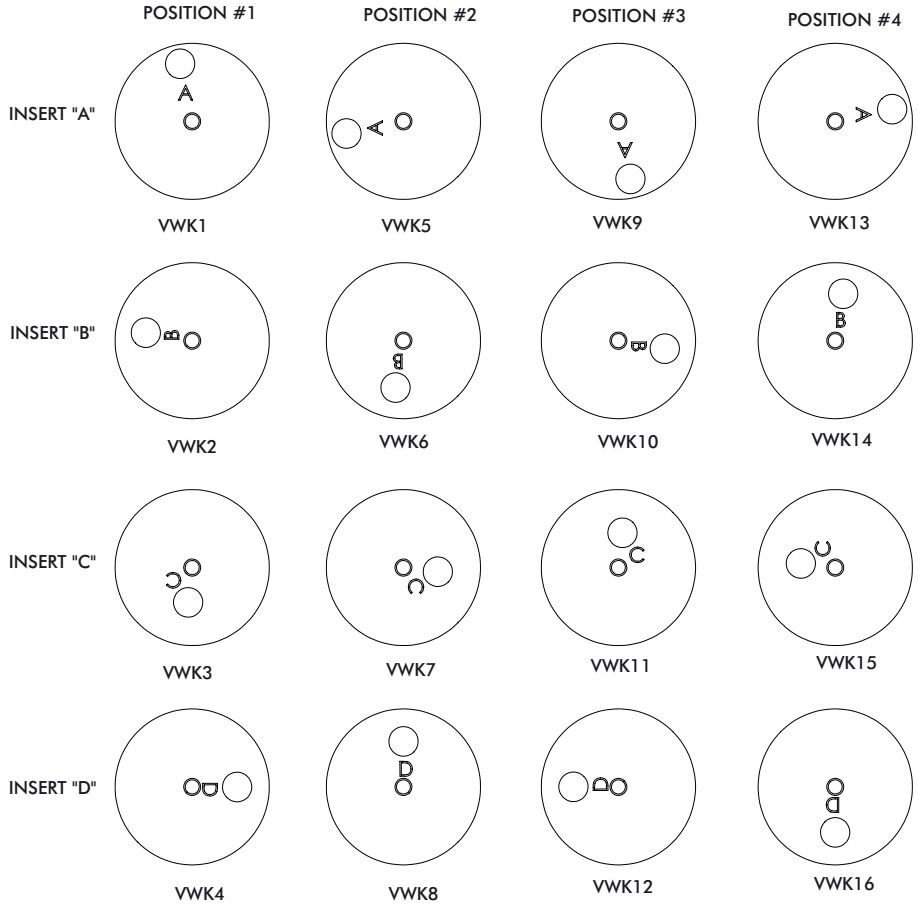

Dimensions and technical information are subject to change without notice

EXTERNAL AIR MANIFOLDS

4-Port Extenal Air Connection

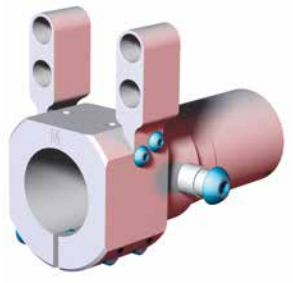

(2) Required

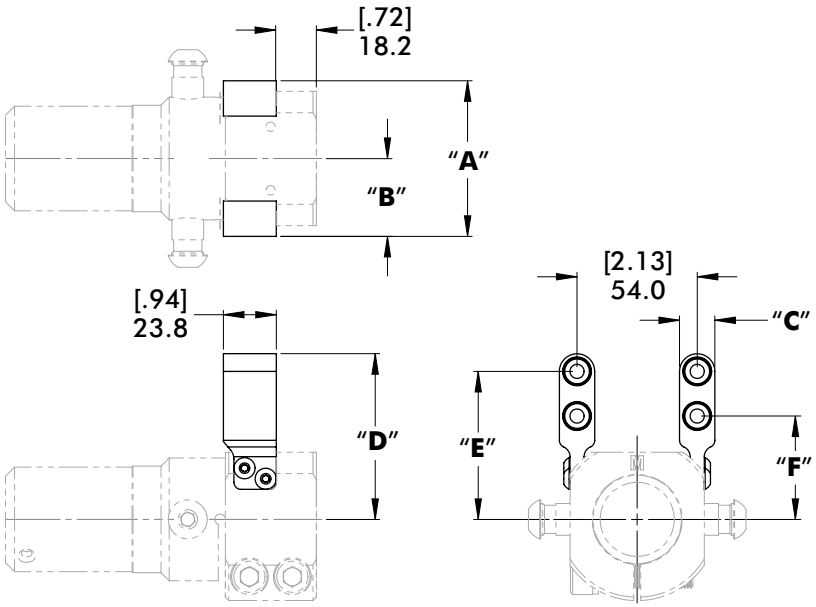

ORDER OPTION	REPLACEMENT PART	"A"	"B"	"C"	"D"	"E"	"F"	WEIGHT
"E4" (Standard High Flow)	**CPI-RDC-40-4-HF**	[2.75] 69.9	[1.38] 34.9	[1.56] 39.6	[3.00] 76.1	[2.62] 66.6	[1.83] 46.5	[2.90 lb] 1.32 kg
(Replacement for "**E4**" Legacy Applications only)	**CPI-RDC-40-4**	[2.63] 66.7	[1.30] 32..9	[1.22] 31.0	[2.66] 67.5	[2.34] 59.5	[1.75] 44.4	[2.89 lb] 1.31 kg

6-Port External Air Connection



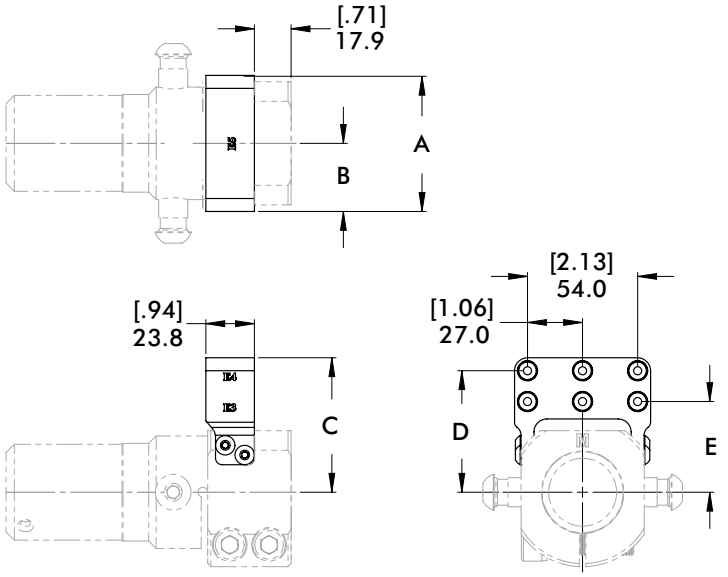

ORDER OPTION	REPLACEMENT PART	"A"	"B"	"C"	"D"	"E"
(Replacement for "**E6**" Legacy Applications only)	RDC-40-4-6PA	[2.61] 66.3	[1.31] 33.4	[2.59] 65.9	[2.34] 59.6	[1.75] 44.5
"E6" (Standard High Flow)	RDC-40-E6-HF	[2.75] 69.9	[1.38] 34.9	[3.12] 79.2	[2.62] 66.5	[1.83] 46.5

ELECTRICAL CONNECTORS

Manual Tool Changers | RDC-40/150 Series Bayonets | Dimensions

MC 5-Pin Micro Electric Connection

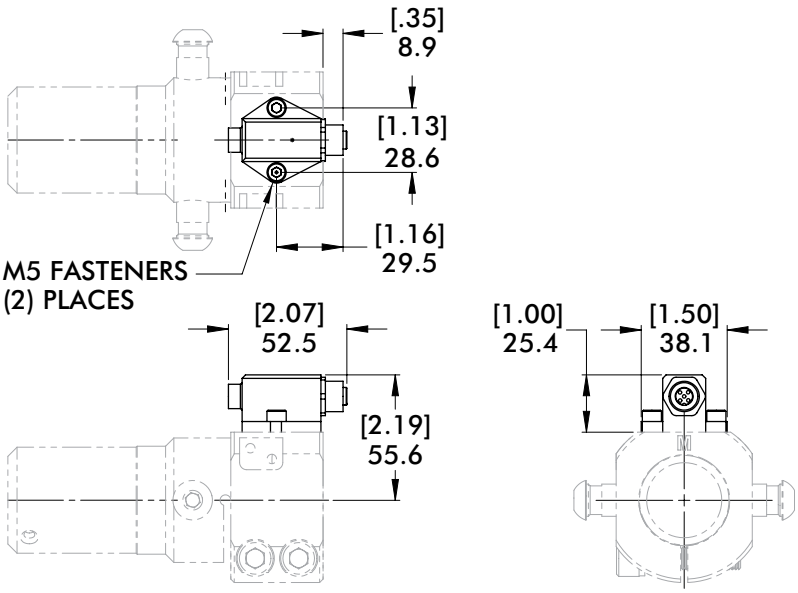

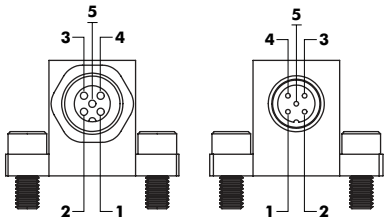

SOCKET #1	PIN #1
SOCKET #2	PIN #2
SOCKET #3	PIN #3
SOCKET #4	PIN #4
SOCKET #5	PIN #5

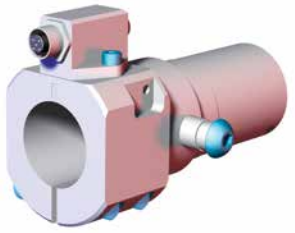

REPLACEMENT PART

CPI-RDB-M5P-5MCF

MN 3-Pin Mini Electric Connection

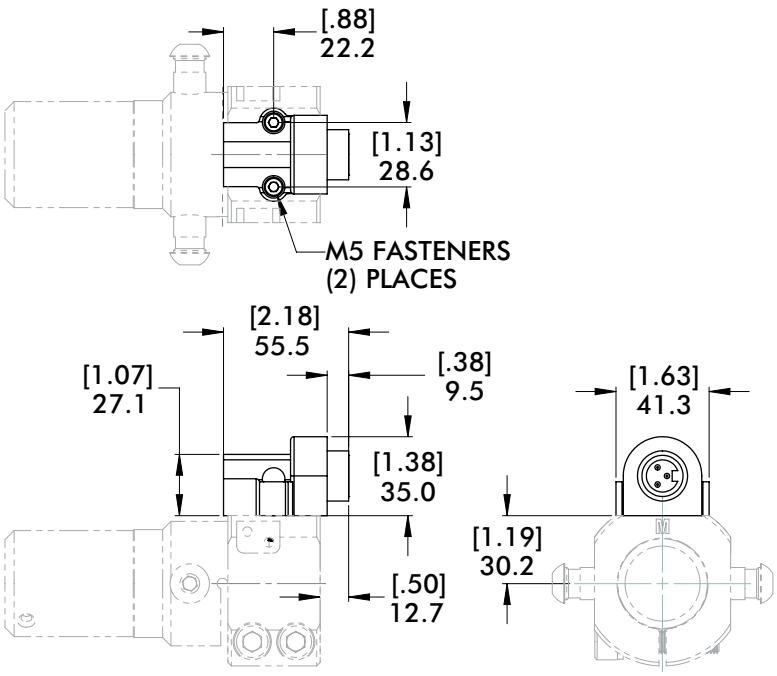

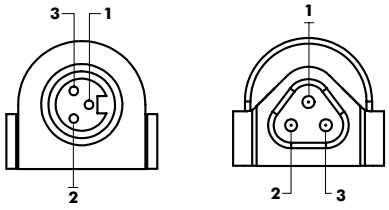

SOCKET #1	PIN #1
SOCKET #2	PIN #2
SOCKET #3	PIN #3

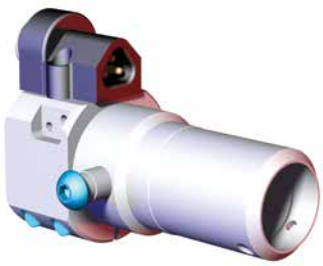

REPLACEMENT PART

CPI-TTB-M3P-3B3

Dimensions and technical information are subject to change without notice

MNF 5-Pin Mini Electric Connection



CPI-RDC-40-M5P-3MNF

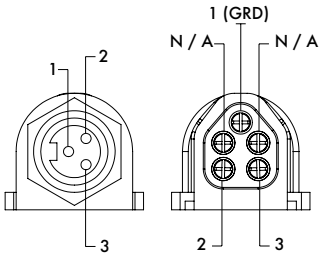

SOCKET #1	GREEN	PIN #1
SOCKET #2	BLACK	PIN #2
SOCKET #3	WHITE	PIN #3
		N / A
		N / A

PLUG COLOR: BLACK

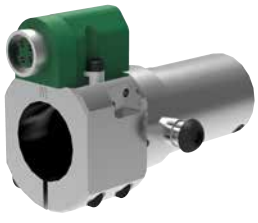

CPI-RDC-40-M5P-4MNF

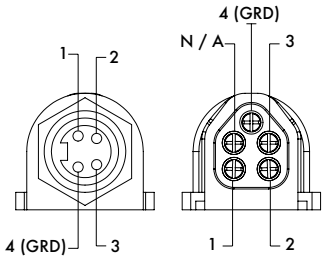

SOCKET #1	BLACK	PIN #1
SOCKET #2	WHITE	PIN #2
SOCKET #3	RED	PIN #3
SOCKET #4	GREEN	PIN #4
		N / A

PLUG COLOR: GREEN

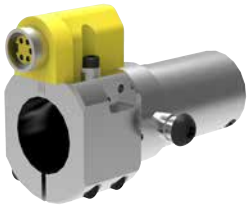

CPI-RDC-40-M5P-5MNF

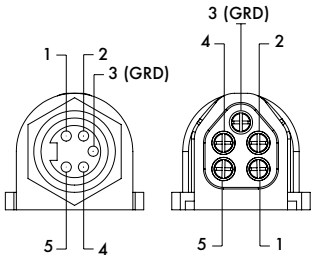

SOCKET #1	WHITE	PIN #1
SOCKET #2	RED	PIN #2
SOCKET #3	GREEN	PIN #3
SOCKET #4	ORANGE	PIN #4
SOCKET #5	BLACK	PIN #5

PLUG COLOR: YELLOW

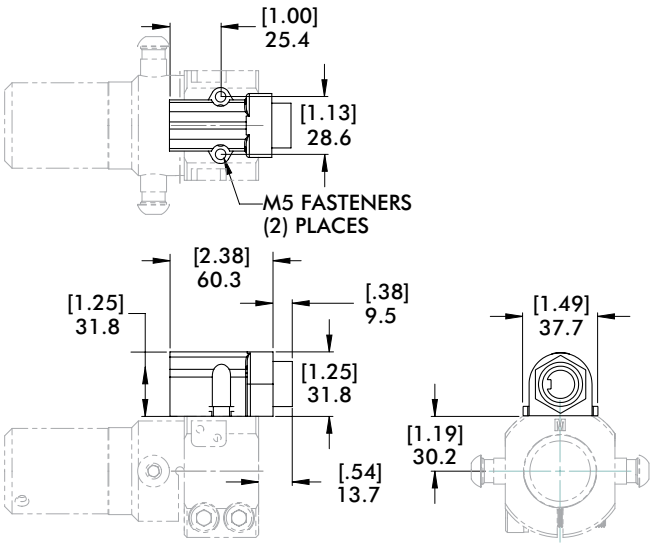

10-Pin Electric Connection

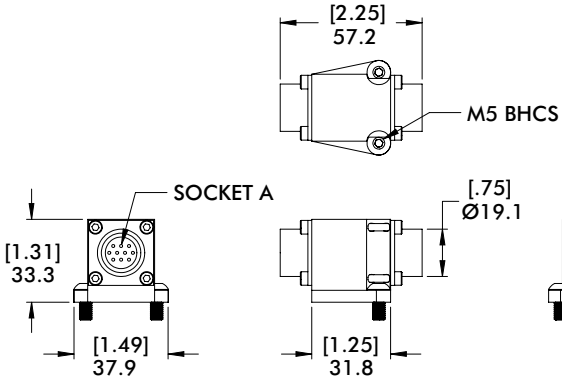



REPLACEMENT PART

CPI-RDC-40-5-10

RDN-25 SERIES DISCONNECT HOUSING

Manual Tool Changers | Instructions for Inverting the Disconnect Locking Handle

Housing with handle in **Standard Position**

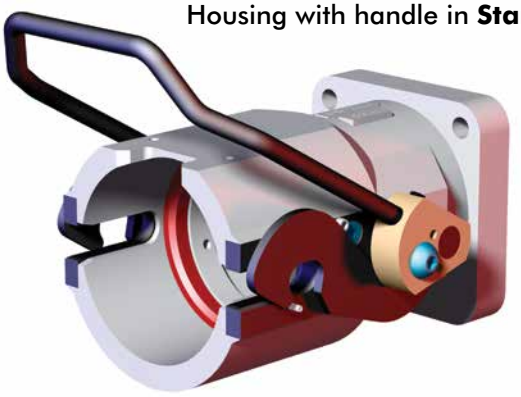

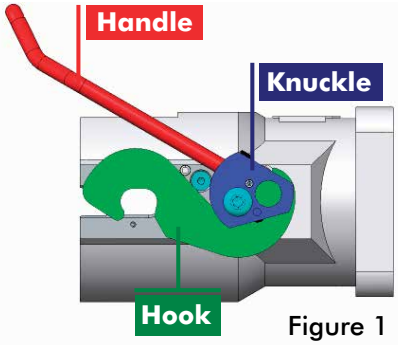

Figure 1

If the handle of the Quick Disconnect Housing interferes with other equipment, it can be inverted and accessed from below the housing. In the inverted position, the hooks and housing remain in the upright position.

1. Loosen the set screw at the base of the handle in each knuckle.
2. Unscrew the button head screw from each knuckle, then remove the handle. (See Figure 1)
3. Slide knuckles and hooks off the main body of the housing. (See Figure 1)
4. Slide hook off each knuckle.
5. Remove the roll pin in each knuckle and insert a 3/16 x 5/16 pin into the hole for the inverted handle position, as shown. (See Figure 2)
6. Rotate each knuckle 180° from previous position and reinstall the hooks. Return the knuckle/hook sub-assembly to the housing.
7. Reinstall handle in the inverted position and tighten set screws. (See Figure 3)

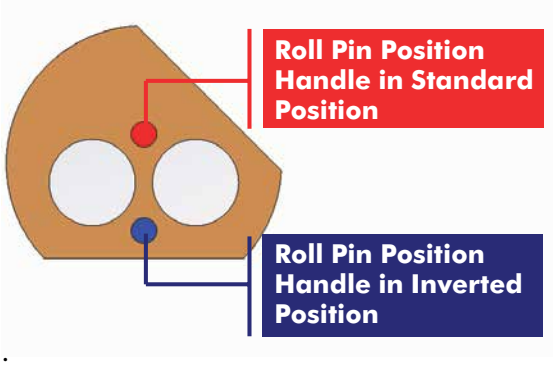

Figure 2 - Housing Knuckle

To order RDN-25 housing with handle in Inverted Position, add "-INV" to the end of order number

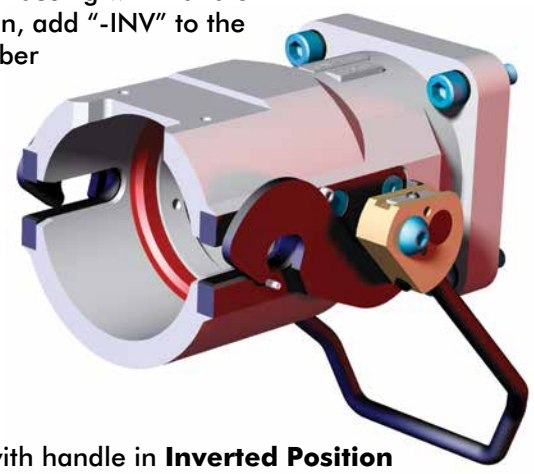

Housing with handle in **Inverted Position**

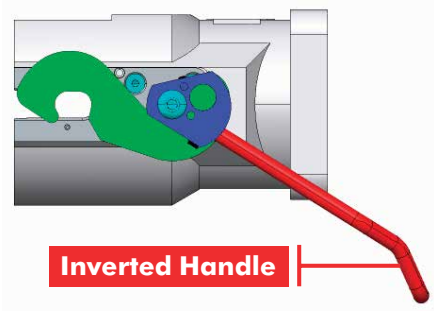

Figure 3

Dimensions and technical information are subject to change without notice

RDN-25 DISCONNECT HOUSING

Features:

- 89mm [3.50 in.] Sq. Flange Mtng.
- Steel handle actuation allows quick and accurate installation, pulling the bayonet into a fixed position within the housing. This action also engages optional air and electric connectors.
- Internal urethane rings eliminate vibration and seat the bayonet securely.

Specifications:

Max. Static Product Load:
949 N*m [700 ft-lb]
Material:
Body: Aluminum
Knuckles: Brass
Handle and Hooks: Steel
Inserts: Urethane
Weight:
4.00 kg [8.90 lb]

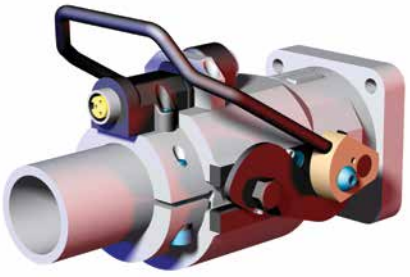

Dimensions



How To Order

Model

CPI – **RDN-25-6** – **A3-O1-S2** – **EL10**

"**RDN-25-6**" Ø60mm/2.50" Quick Disconnect Housing

Air Port Connection **A3** (3 Port) or **A6** (6-Port)
"**O(x)**"= (Qty) of Open Ports / "**S(x)**"= (Qty) of Shutoff Ports

- "**A3-O0-S3**" (0)Open-(3)Shutoff
- "**A3-O1-S2**" (1)Open-(2)Shutoff
- "**A3-O2-S1**" (2)Open-(1)Shutoff
- "**A3-O3-S0**" (3)Open-(0)Shutoff
- "**A6-O0-S6**" (0)Open-(6)Shutoff
- "**A6-O1-S5**" (1)Open-(5)Shutoff
- "**A6-O2-S4**" (2)Open-(4)Shutoff
- "**A6-O3-S3**" (3)Open-(3)Shutoff
- "**A6-O4-S2**" (4)Open-(2)Shutoff
- "**A6-O5-S1**" (5)Open-(1)Shutoff
- "**A6-O6-S0**" (6)Open-(0)Shutoff

Electrical Mounting

Mounting for Large Connectors (Leave blank for Standard Mounting)

AIR PORTS AND ELECTRICAL CONNECTIONS

Manual Tool Changers | RDN-25 Flange Mount Disconnect Housings | Dimensions

A3 3-Port Internal Air Connection with Shutoff Option



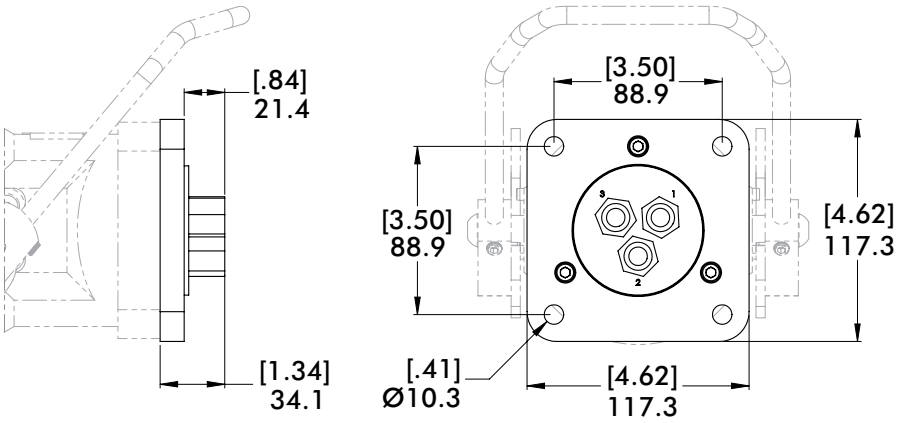

A6 6-Port Internal Air Connection with Shutoff Option



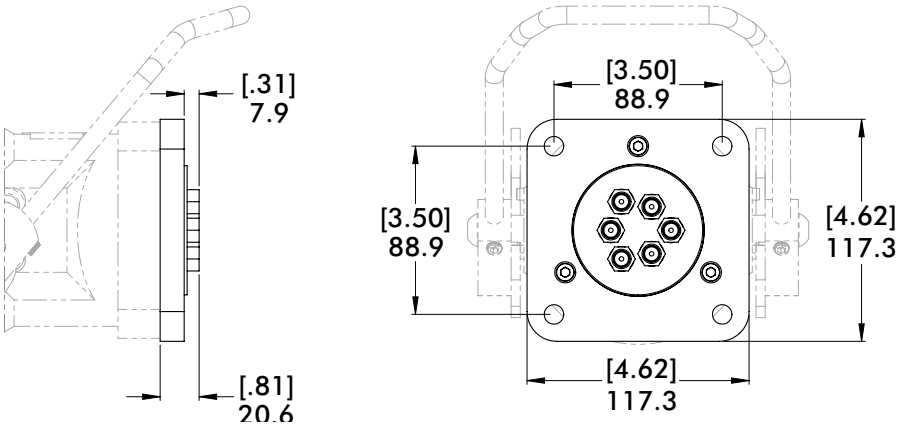

EL10 Mounting for Large Electric Connection



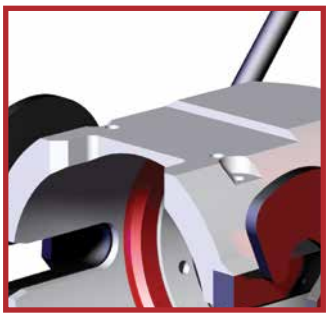

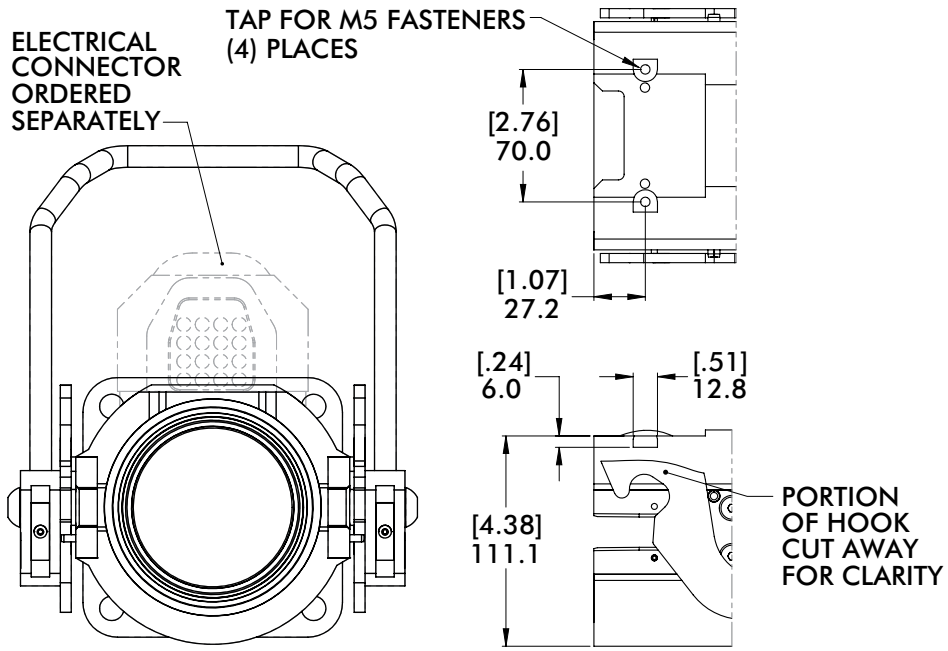

Dimensions and technical information are subject to change without notice

ELECTRICAL CONNECTIONS

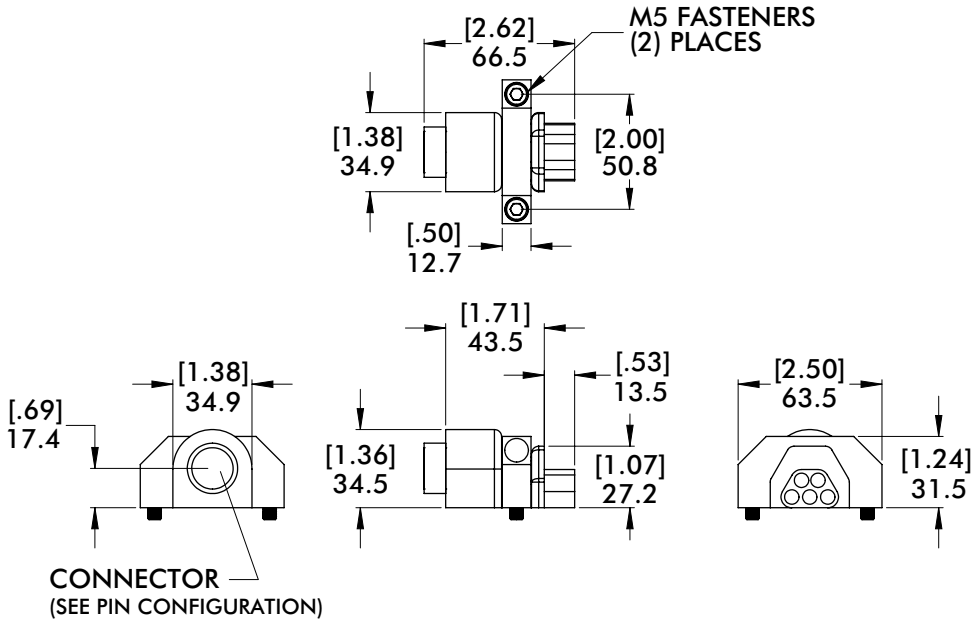

5 Pin Connectors for Housing - Standard Pin Configurations

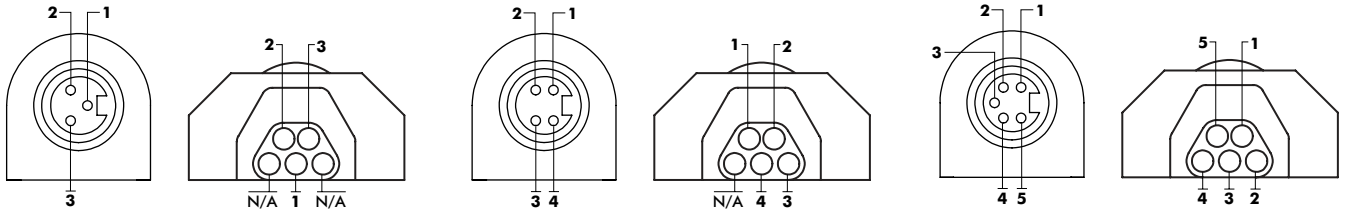

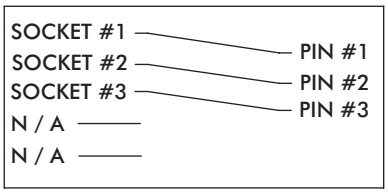

3-Pin to 5-Pin Connector	
A-Side	3-Pin, Single Key
B-Side	5-Pin, Male Plug, Female Socket

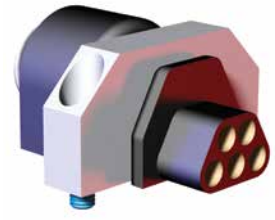

MODEL NUMBER
CPI-RDH-F5S-3B3

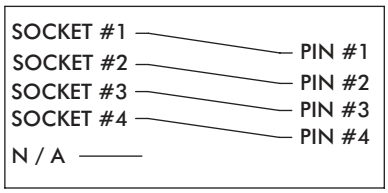

4-Pin to 5-Pin Connector	
A-Side	4-Pin, Single Key
B-Side	5-Pin, Male Plug, Female Socket

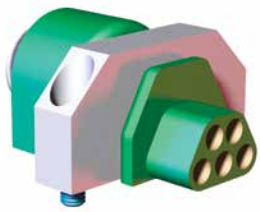

MODEL NUMBER
CPI-RDH-F5S-4B4

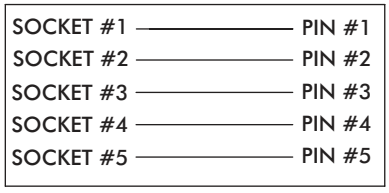

5-Pin to 5-Pin Connector	
A-Side	5-Pin, Single Key
B-Side	5-Pin, Male Plug, Female Socket



MODEL NUMBER
CPI-RDH-F5S-5B5

ELECTRICAL CONNECTIONS

Manual Tool Changers | RDN-25 Series Disconnect Housings | Dimensions

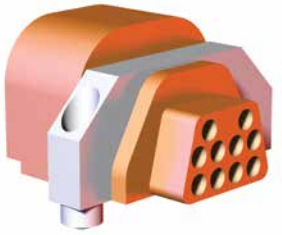

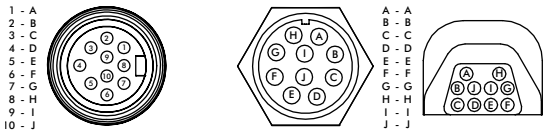

10 Pin Configuration

Model Number	A-Side	B-Side
CPI-RDH-F10S-A10	10-Pin	10-Pin, Male Plug, Female Socket
CPI-RDH-F10S-B10	10-Pin	

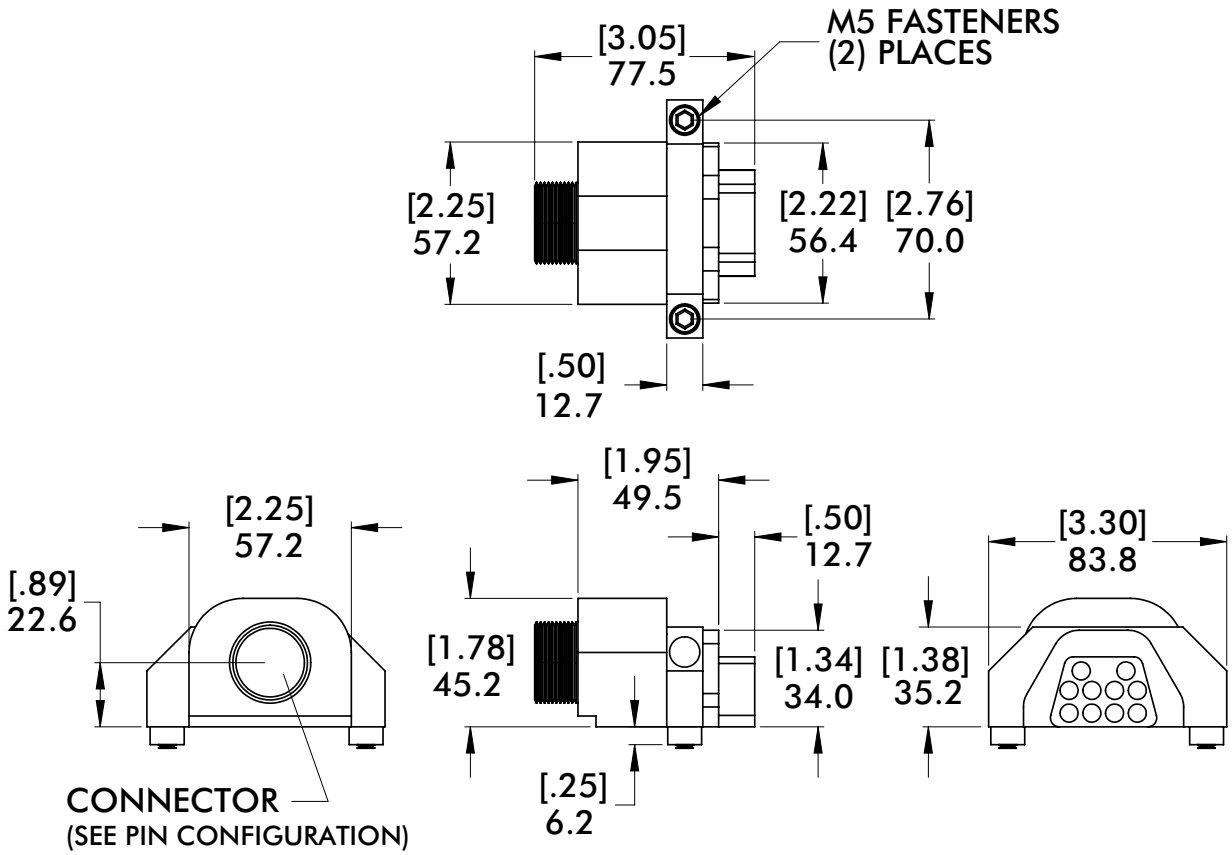

Dimensions and technical information are subject to change without notice

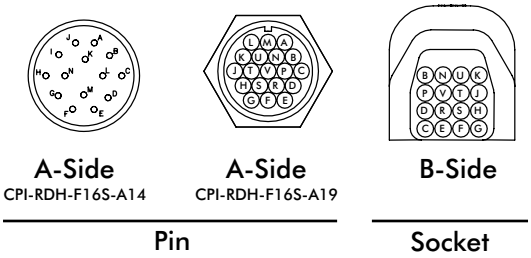

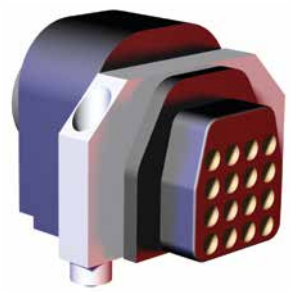

16 Pin Configuration

Model Number	A-Side	B-Side
CPI-RDH-F16S-A19	19-Pin	16-Pin, Male Plug, Female Socket
CPI-RDH-F16S-A14	14-Pin	

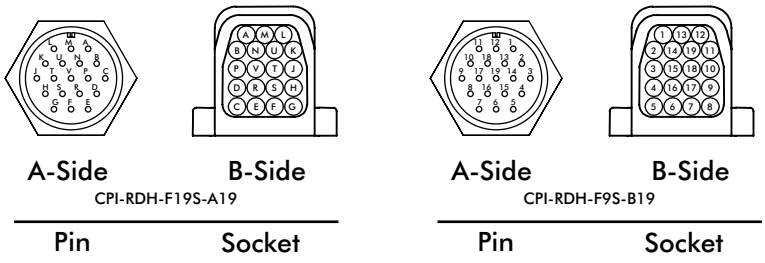

19 Pin Configuration

Model Number	A-Side	B-Side
CPI-RDH-F19S-A19	19-Pin	19-Pin, Male Plug, Female Socket
CPI-RDH-F19S-B19	19-Pin	

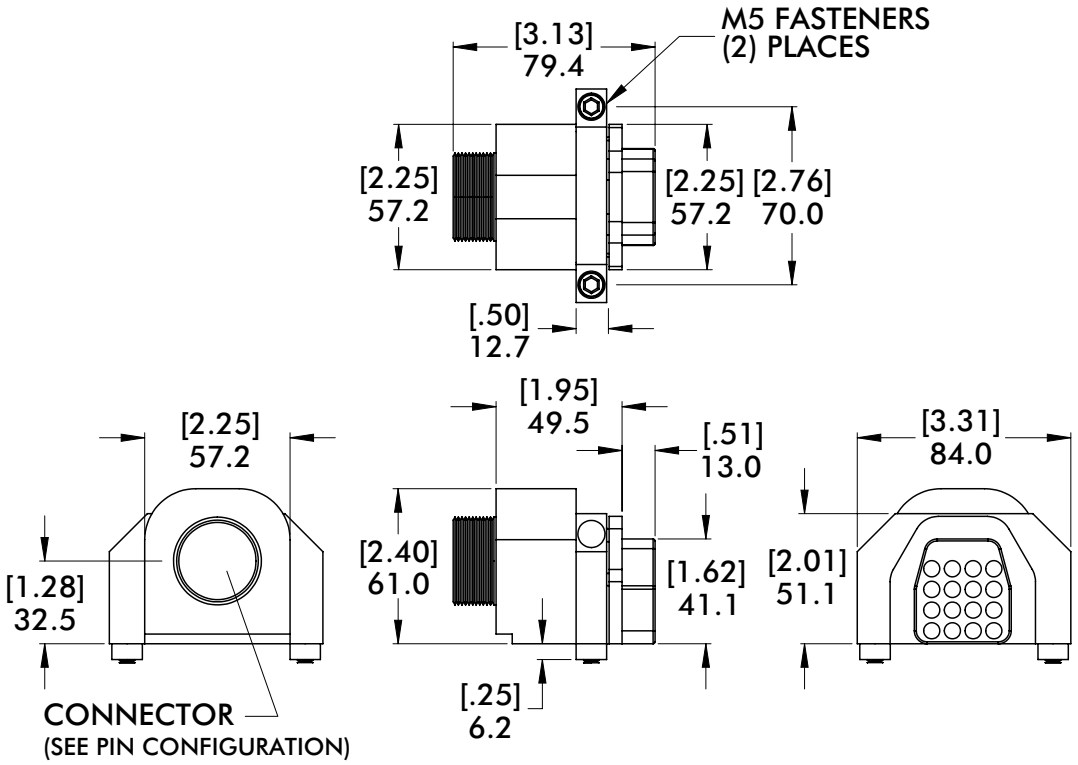

RDC SERIES BAYONETS

Manual Tool Changers | 2.50"/60mm Diameter Booms | Product Overview

Features:

- Used in conjunction with the Quick Disconnect Housing to provide an efficient mode of changing tools manually.
- (2) Hardened alignment pins allows quick and accurate installation into the housing.
- Optional "EL10" machined surface for large electrical connectors.

Specifications:

Max. Static Product Load:
678 N*m [500 ft-lb]
Material:
Body: Aluminum
Pins: Steel
Weight:
1.6 kg [3.5 lb]

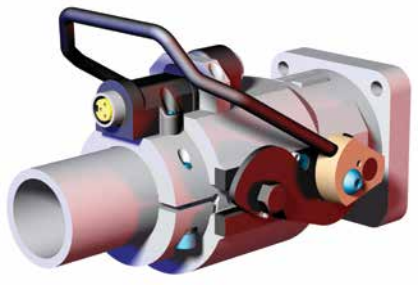

Dimensions



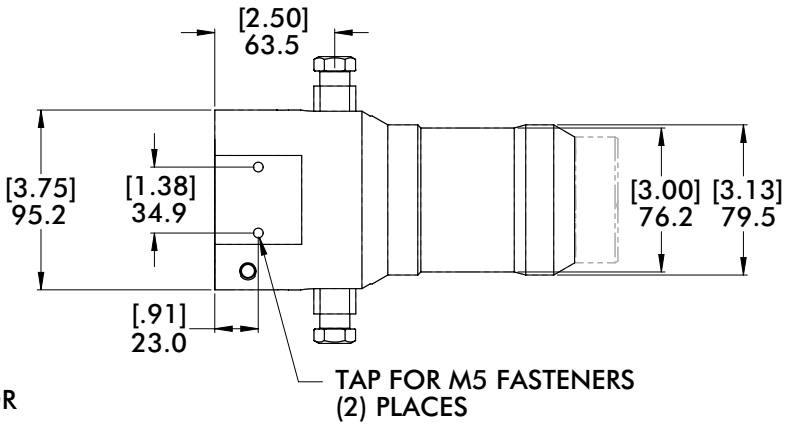

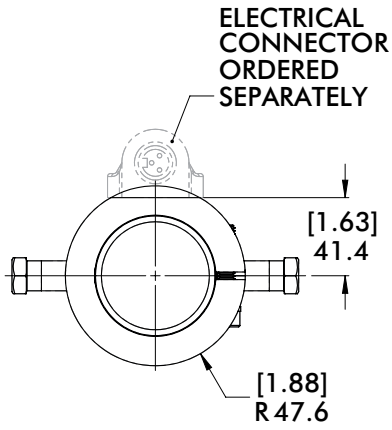

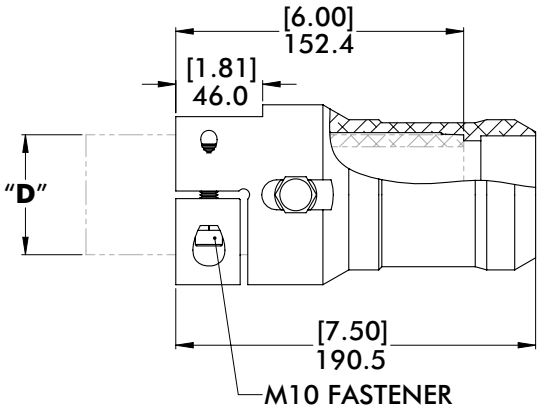

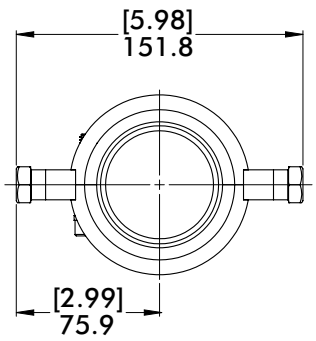

How To Order

	Model	Boom/Tube (Ø) "D"	Version	Air Port Connection	Electrical Mounting
CPI –	RDC	25	2	A3	EL10
	"RDC" Quick Disconnect Bayonet	"25" 2.50" (in) "60" 60mm	"2" Version 2	"A3" 3-Port "A6" 6-Port	**Mounting for Large Connectors** (Leave blank for Standard Mounting)

Dimensions and technical information are subject to change without notice

RDC SERIES BAYONETS

Manual Tool Changers | 2.50"/60mm Diameter High Torque Booms | Product Overview

Features:

- Extended clamp area increases the holding surface and torque capacity for high speed applications.
- (2) Hardened alignment pins allows quick and accurate installation into the bayonet.
- Optional "EL10" machined surface for large electrical connectors.

Specifications:

Max. Static Product Load:
949 N*m [700 ft-lb]
Material:
Body: Aluminum
Pins: Steel
Weight:
2.1 kg [4.7 lb]

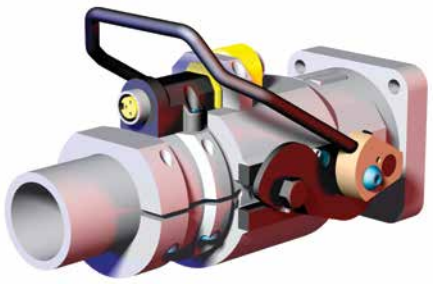

Dimensions

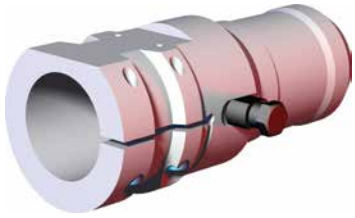

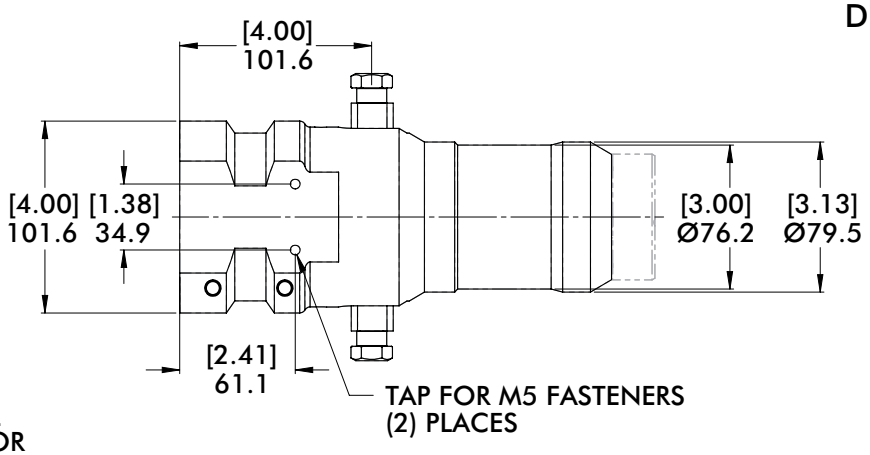

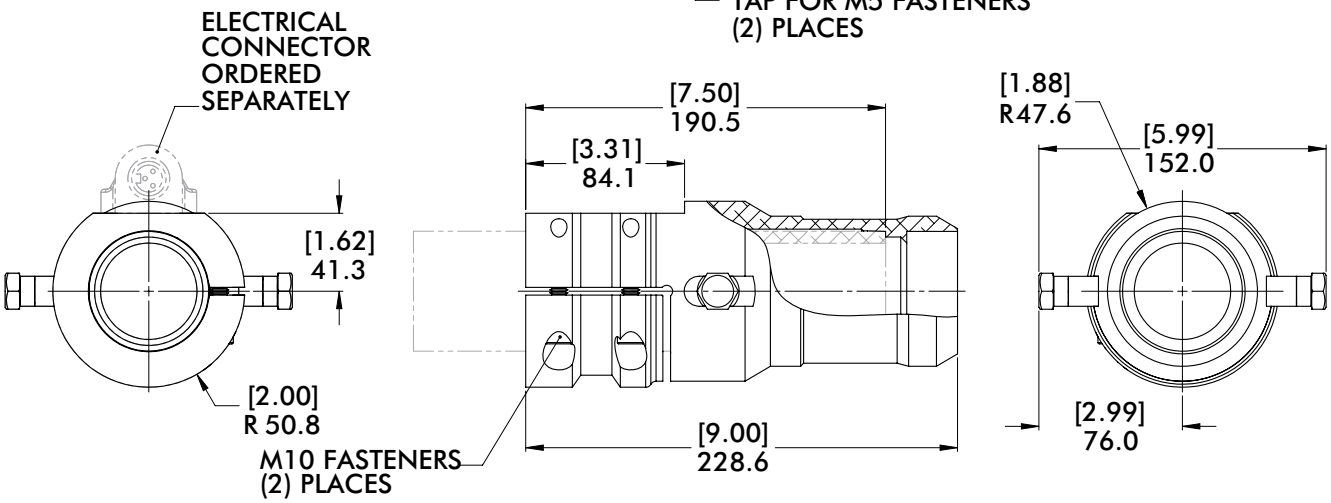

How To Order

CPI – **Model** **RDC** – **Boom/Tube (Ø) "D"** **25** – **Version** **2HT** – **Air Port Connection** **A3** – **Electrical Mounting** **EL10**

Model
"**RDC**" Quick Disconnect Bayonet

Boom/Tube (Ø) "D"
"**25**" 2.50"(in)
"**60**" 60mm

Version
"**2HT**" Version 2 Hi-Torque

Air Port Connection
"**A3**" 3-Port
"**A6**" 6-Port

Electrical Mounting
Mounting for Large Connectors (Leave blank for Standard Mounting)

AIR PORTS AND ELECTRICAL CONNECTIONS

Manual Tool Changers | RDC-25/60 Series Bayonets | Dimensions

A3 3-Port/**A6** 6-Port Internal Air Connection

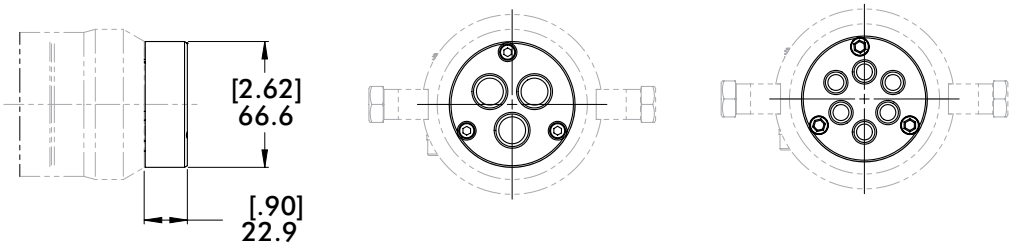

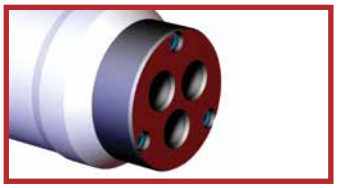

"**A3**" 3-Port Internal Air Connection

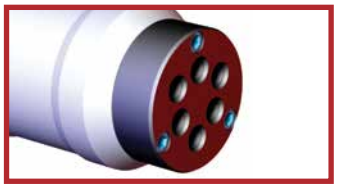

"**A6**" 6-Port Internal Air Connection

REPLACEMENT PART
CPI-BC-250-3-U38 (3/8 NPT ports)
CPI-BC-60-3-G38 (G3/8 ports)

REPLACEMENT PART
CPI-BC-250-6-U18 (1/8 NPT ports)
CPI-BC-60-6-G18 (G1/8 ports)

EL10 Mounting for Large Electric Connection



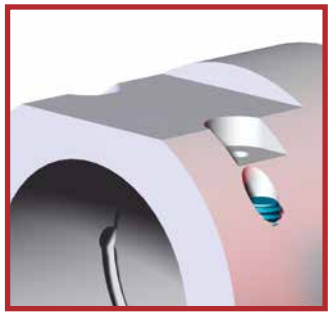

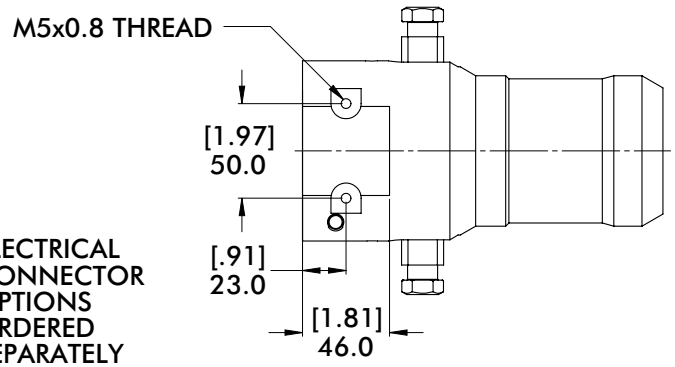

ELECTRICAL CONNECTOR OPTIONS ORDERED SEPARATELY

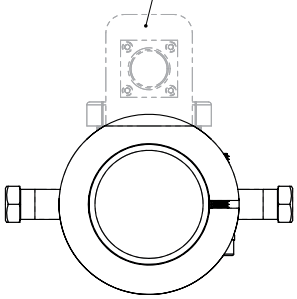

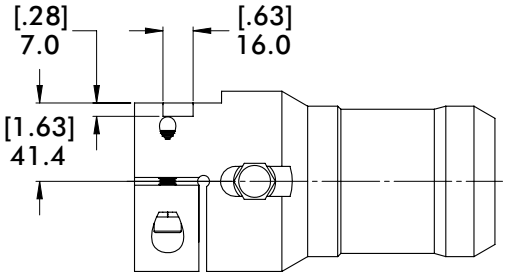

Dimensions and technical information are subject to change without notice

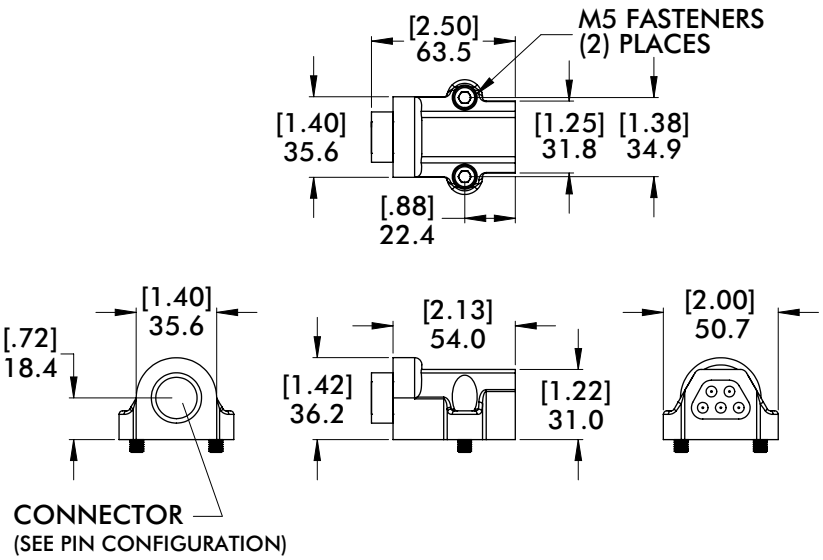

5 Pin Connectors for Bayonet (Tool Side)- Standard Pin Configurations

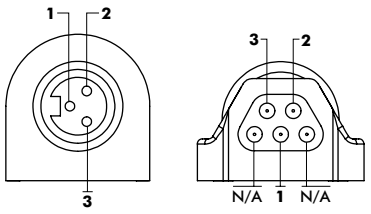

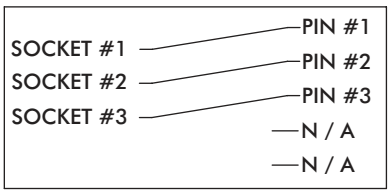

3-Pin to 5-Pin Connector	
A-Side	3-Pin, Single Key
B-Side	5-Pin, Male Pin, Female Plug

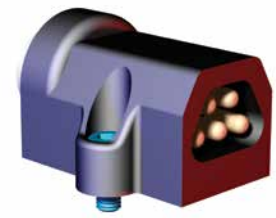

MODEL NUMBER
CPI-RDB-M5P-3B3

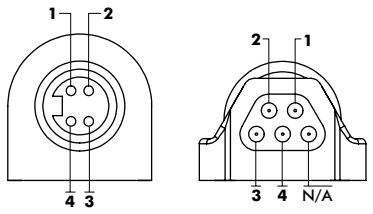

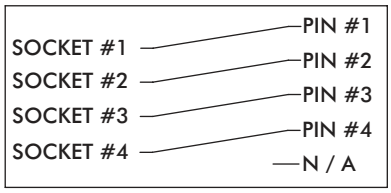

4-Pin to 5-Pin Connector	
A-Side	4-Pin, Single Key
B-Side	5-Pin, Male Pin, Female Plug



MODEL NUMBER
CPI-RDB-M5P-4B4

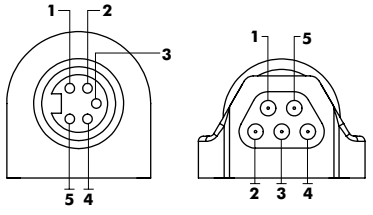

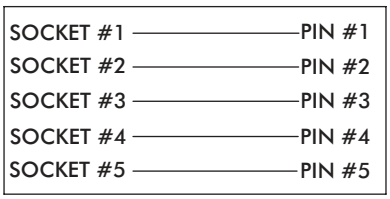

5-Pin to 5-Pin Connector	
A-Side	5-Pin, Single Key
B-Side	5-Pin, Male Pin, Female Plug



MODEL NUMBER
CPI-RDB-M5P-5B5

ELECTRICAL CONNECTIONS

Manual Tool Changers | RDC-25/60 Series Bayonets | Dimensions

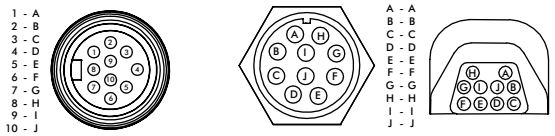

A-Side
CPI-RDB-M10P-B10

A-Side
CPI-RDB-M10P-A10

B-Side

Socket

Pin



10 Pin Configuration

Model Number	A-Side	B-Side
CPI-RDB-M10P-A10	10-Pin	10-Pin, Male Pin, Female Plug
CPI-RDB-M10P-B10	10-Pin	

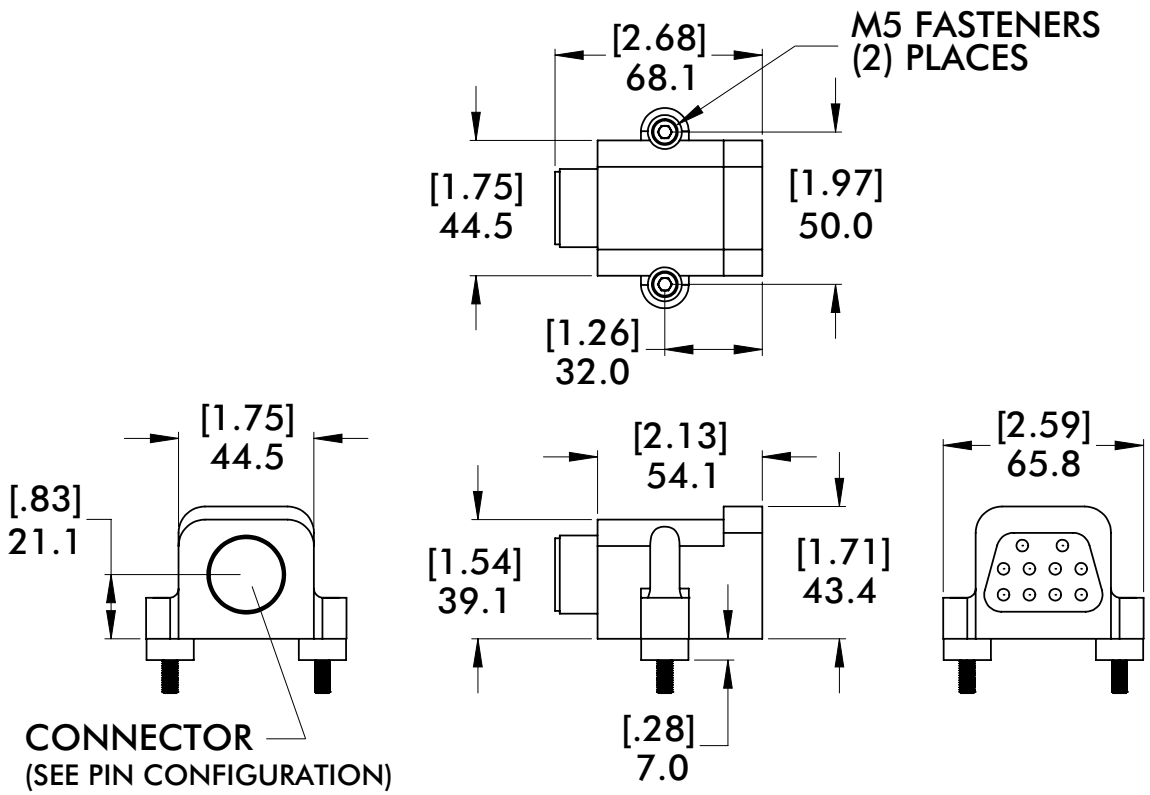

Dimensions and technical information are subject to change without notice



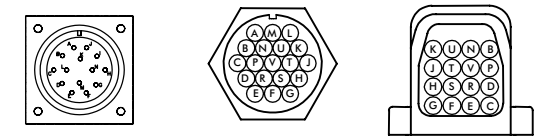

A-Side CPI-RDB-M16P-A14 | A-Side CPI-RDB-M16P-A19 | B-Side

Socket | Pin

16 Pin Configuration

Model Number	A-Side	B-Side
CPI-RDB-M16P-A19	19-Pin	16-Pin, Male Pin, Female Plug
CPI-RDB-M16P-A14	14-Pin	

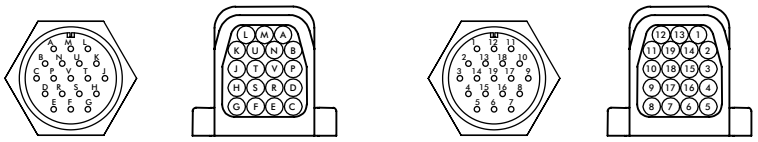

A-Side | B-Side (CPI-RDB-M19P-A19) — Socket | Pin

A-Side | B-Side (CPI-RDB-M19P-B19) — Socket | Pin

19 Pin Configuration

Model Number	A-Side	B-Side
CPI-RDB-M19P-A19	19-Pin	19-Pin, Male Pin, Female Plug
CPI-RDB-M19P-B19	19-Pin	

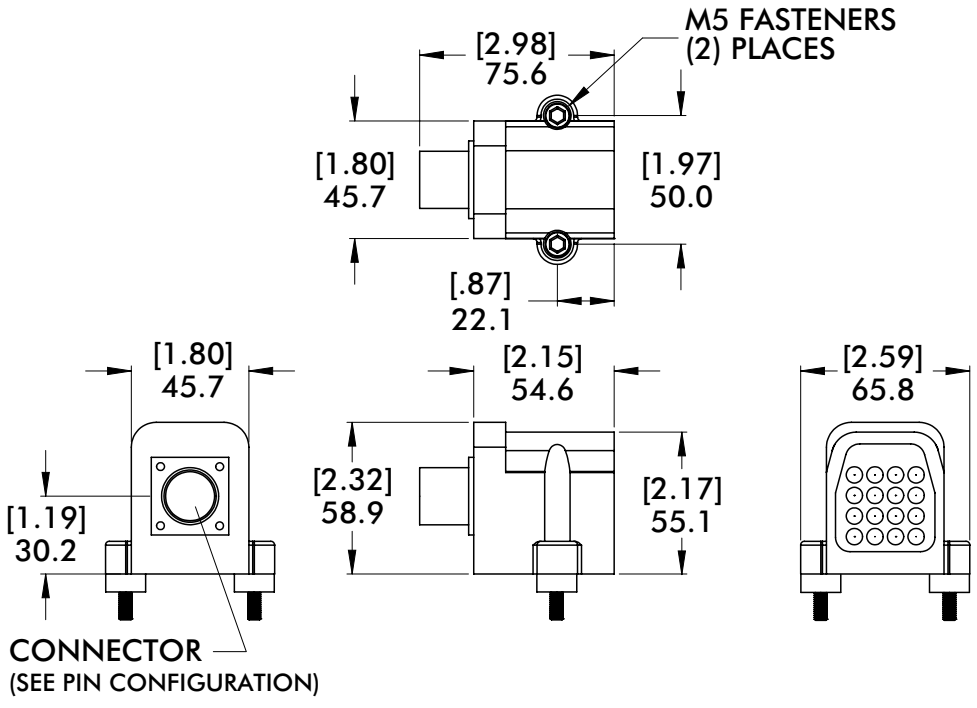

IDLE STATION

Automation Adaptors | (1) RDN-25-6 Disconnect Housings with Ability to be Fixed to Bolster | Dimensions

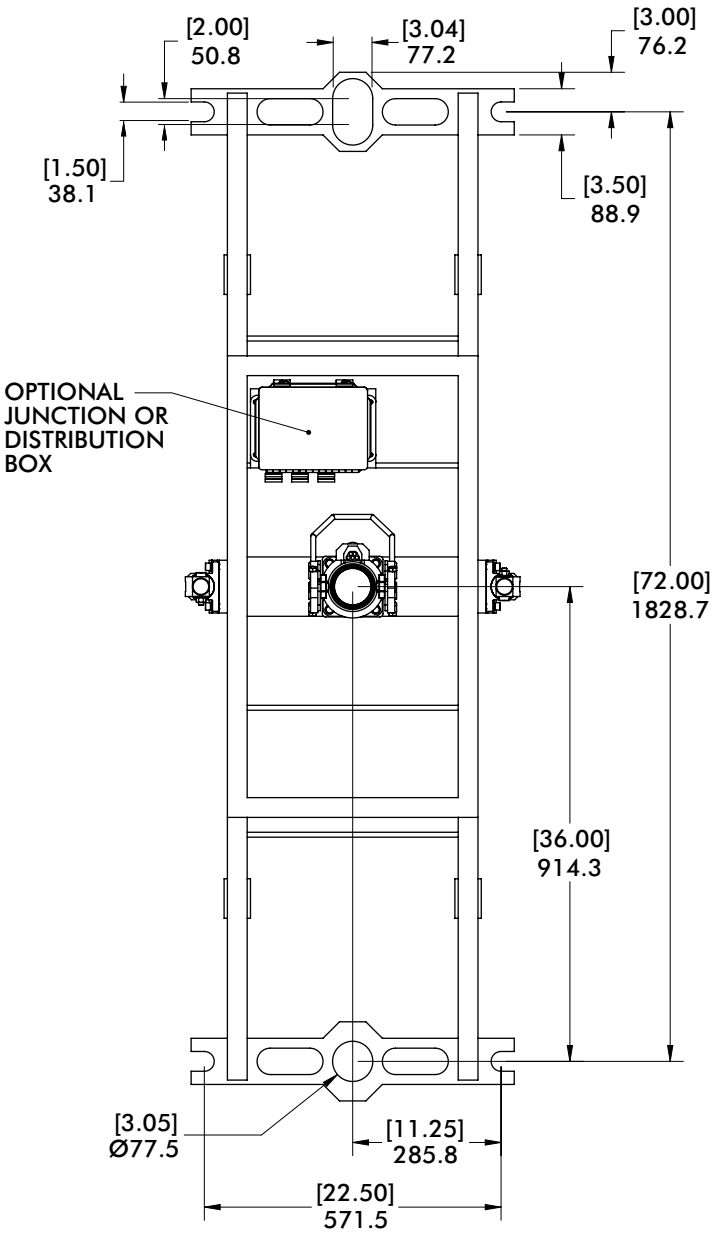

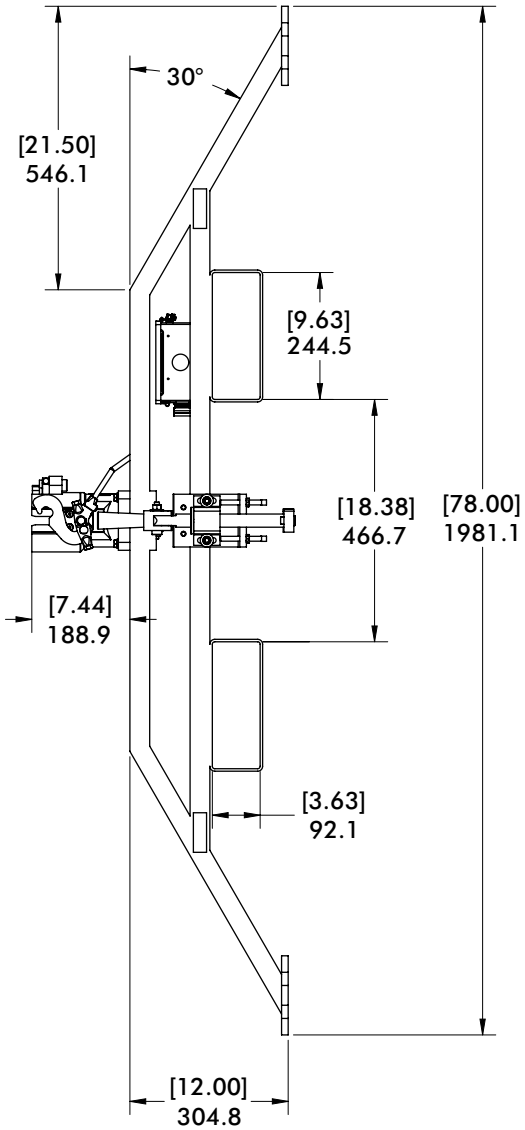

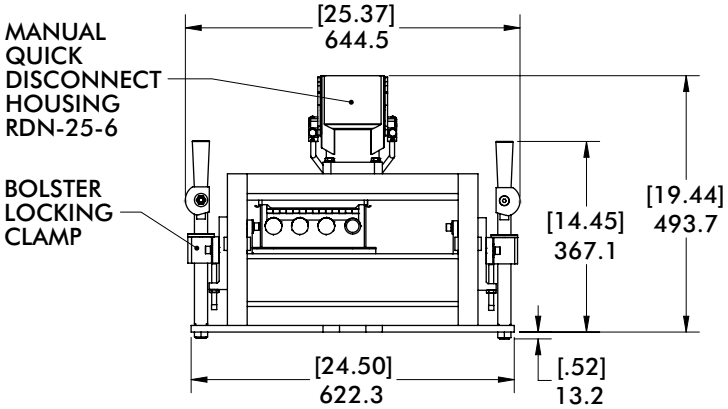

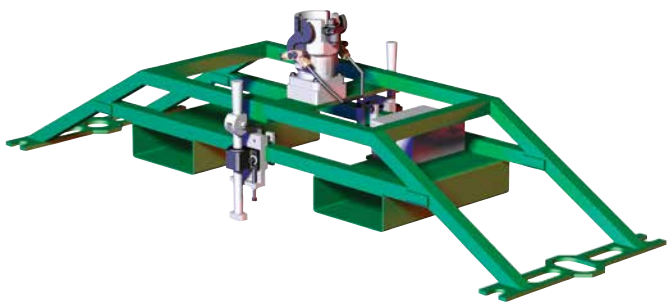

MODEL NUMBER	WEIGHT
CPI-PNS-ASSY	85.41 kg [188.30 lb]

Dimensions and technical information are subject to change without notice

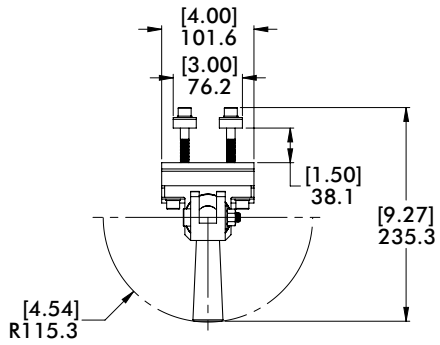

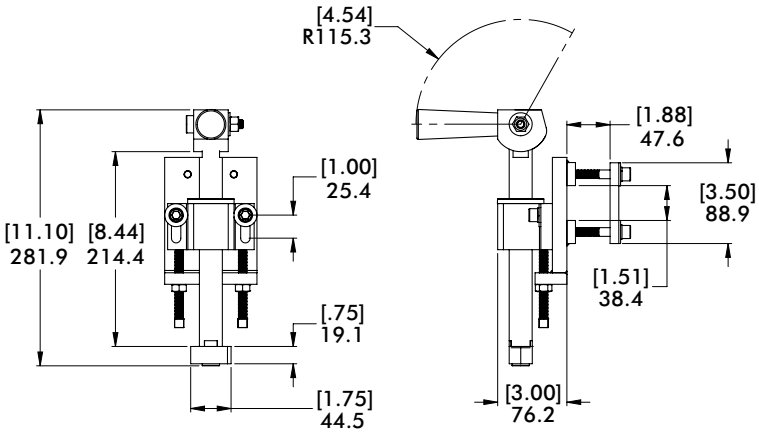

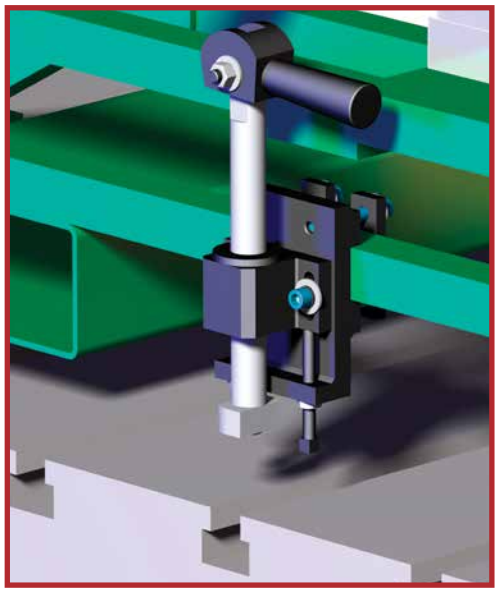

Stored Position

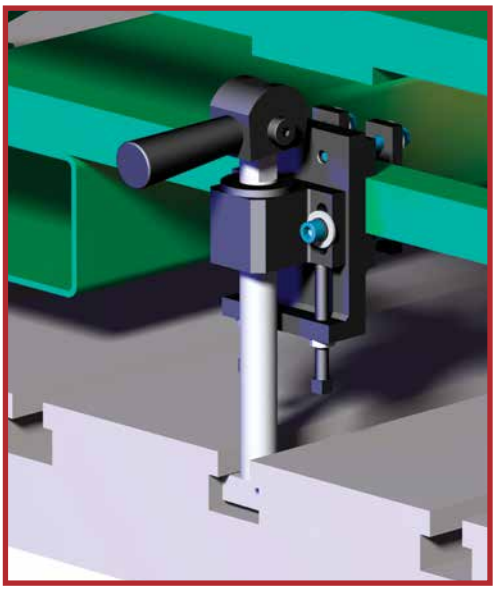

In Use, Locked into Bolster

MODEL NUMBER	WEIGHT
CPI-BLC-100-15-6	5.50 kg [12.12 lb]

IDLE STATION

Automation Adaptors | (3) RDN-25-6 Disconnect Housings and Mobile Flexibility | Dimensions

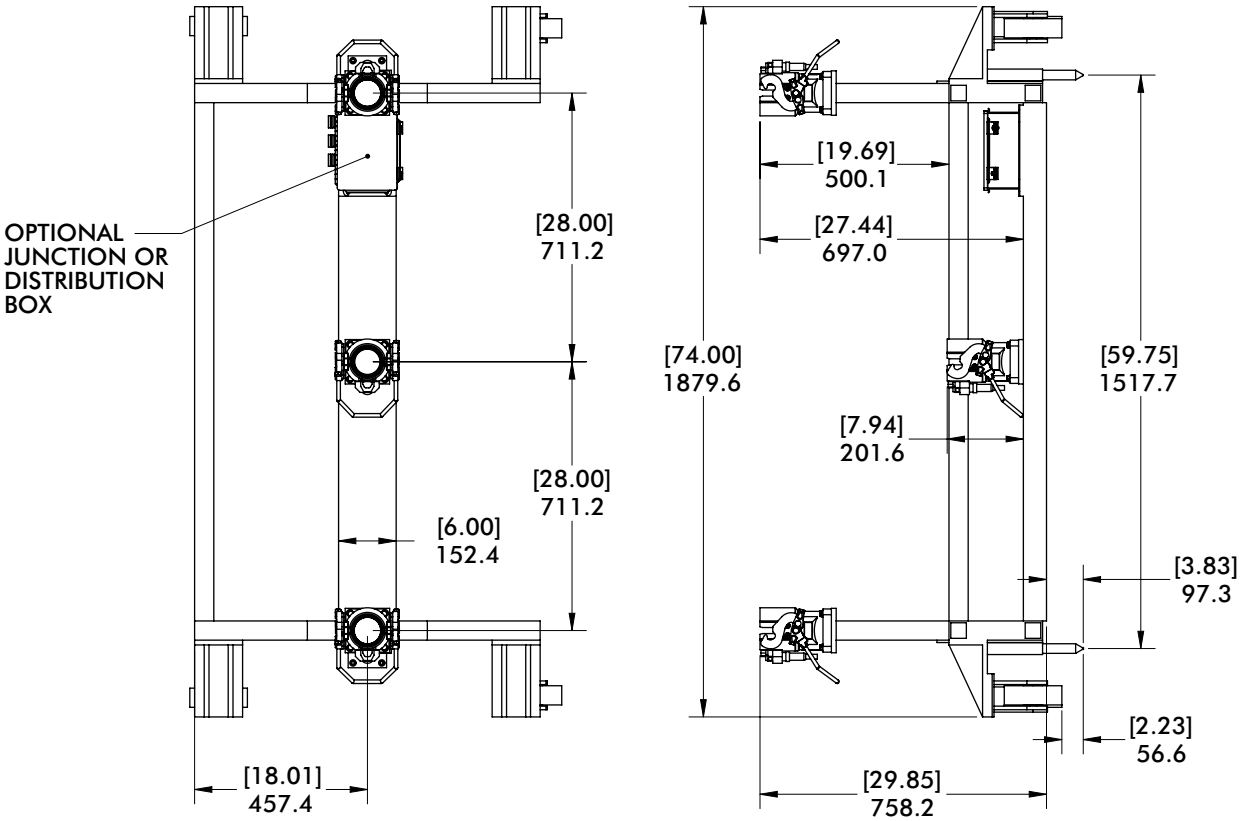

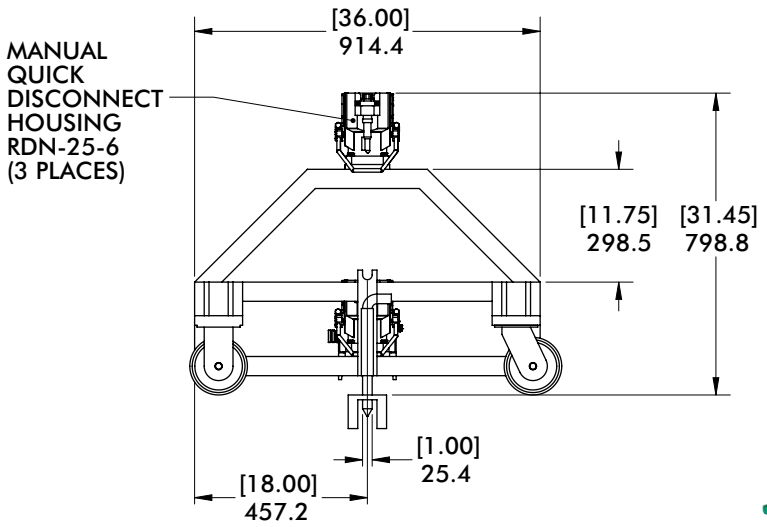

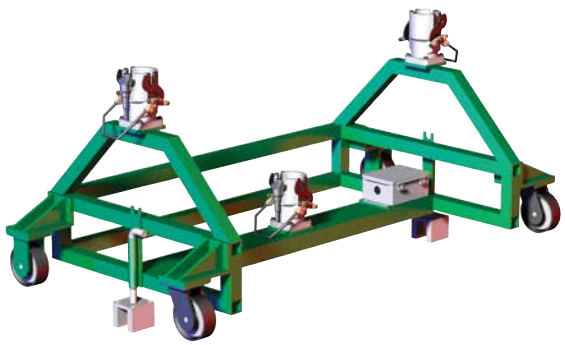

MODEL NUMBER	WEIGHT
CPI-INS-ASSY	182.67 kg [402.73 lb]

Dimensions and technical information are subject to change without notice

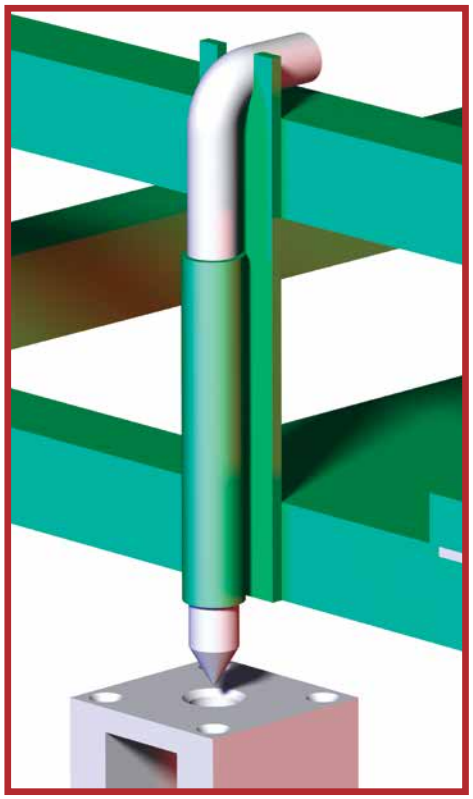

Stored Position



Engaged Position

ROBOT ADAPTER MOUNTS

Table of Contents



Adaptor Mount Assemblies and Components 3-28

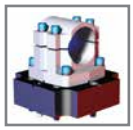

Mid-Mount Flanges 29



Tooling Mounting Blocks 38

ROBOT ADAPTER MOUNTS

Robot Automation Adaptors | Selection Guide - Manual Tool Changers RDN-25 Series

STYLE 1 (ACMX58)

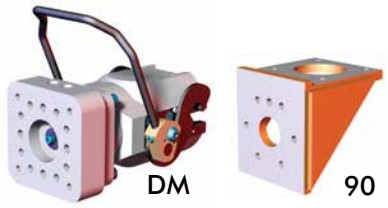

STYLE 2 (FA500)

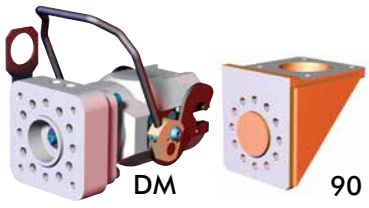

STYLE 3 (KW150)

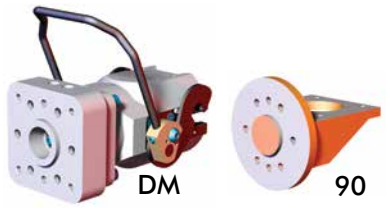

STYLE 4 (FA900)

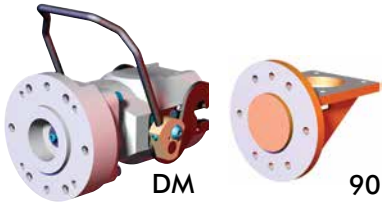

STYLE 5 (KA760)

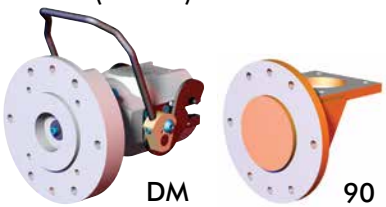

STYLE 6 (MMNY300)

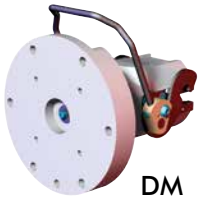

STYLE 7 (FA430I)

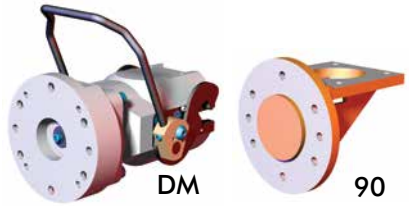

STYLE 8 (FA420)

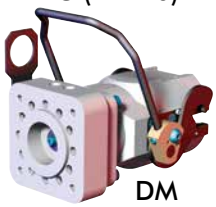

STYLE 9 (ABB44)

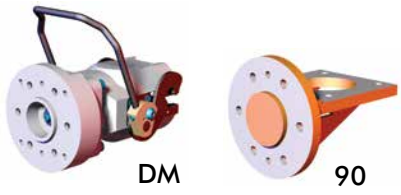

STYLE 10 (KWZ165)

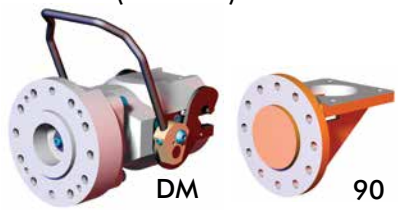

STYLE 11 (KWUT120)

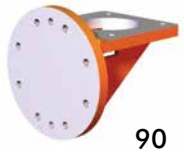

STYLE 12 (FA710)

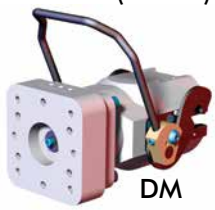

STYLE 14 (MMK100)

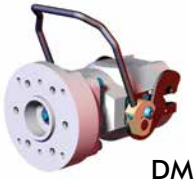

STYLE 15 (KA660)

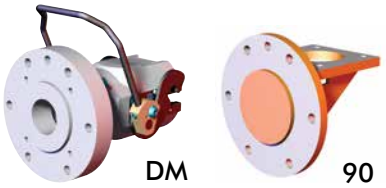

STYLE 16 (FA2000)



STYLE 18 (MMHP165-125)

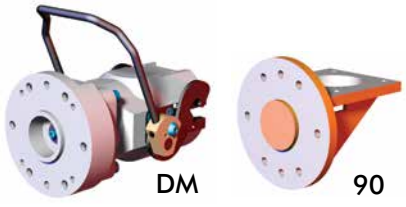

STYLE 19 (MMHP165-92)

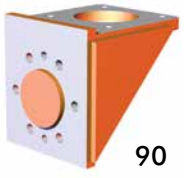

STYLE 21 (EOAMC30)

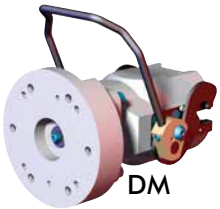

STYLE 22 (FA900-SSM)

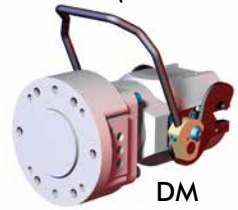

STYLE 23 (MD350)

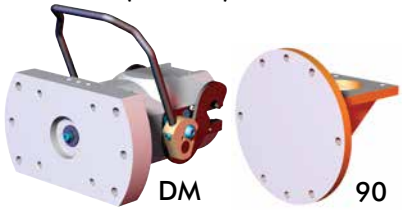

STYLE 24 (SA000)



ROBOT ADAPTER MOUNTS

Robot Automation Adaptors | Selection Guide - Manual Tool Changers RDN-25 Series

250 SERIES ROBOT ADAPTOR SELECTION GUIDE										
ADAPTOR MOUNTS		MOUNTING PATTERN			DOWELS			PILOT		DWG PAGE
STYLE (MODEL)	TYPE AVAIL.	BOLT CIRCLE	BOLT SIZE	BOLTS QTY	BOLT CIRCLE	DWL SIZE	DWL QTY	DIAMETER (Ø)	DEPTH	
STYLE 1 (ACMX58)	**DM/90**	Ø90mm [Ø3.54″]	M8	8	Ø80mm [Ø3.15″]	10mm	4	N/A	N/A	**4**
STYLE 2 (FA500)	**DM/90**	Ø90mm [Ø3.54″]	M10	8	Ø90mm [Ø3.54″]	10mm	4	Ø59.5mm [Ø2.34″]	4.8 [.19]	**5**
STYLE 3 (KW150)	**DM/90**	Ø92mm [Ø3.62″]	M10	6	Ø92mm [Ø3.62″]	9mm	2	Ø54mm [Ø2.13″]	6.4 [.25]	**6**
STYLE 4 (FA900)	**DM/90**	Ø125mm [Ø4.92″]	M10	6	Ø125mm [Ø4.92″]	10mm	2	Ø79.5mm [Ø3.13″]	6.4 [.25]	**7**
STYLE 5 (KA760)	**DM/90**	Ø160mm [Ø6.30″]	M10	6	Ø160mm [Ø6.30″]	10mm	2	Ø99.9mm [Ø3.94″]	6.4 [.25]	**8**
STYLE 6 (MMNY300)	**DM**	Ø200mm [Ø7.87″]	M12	6	Ø200mm [Ø7.87″]	12mm	1	N/A	N/A	**9**
STYLE 7 (FA430I)	**DM/90**	Ø125mm [Ø4.92″]	M10	6	Ø125mm [Ø4.92″]	10mm	2	Ø79.5mm [Ø3.13″]	6.4 [.25]	**10**
STYLE 8 (FA420)	**DM**	Ø92mm [Ø3.62″]	M10	8	Ø92mm [Ø3.62″]	10mm	4	Ø79.5mm [Ø3.13″]	4.8 [.19]	**11**
STYLE 9 (ABB44)	**DM/90**	Ø100mm [Ø3.94″]	M10	6	Ø100mm [Ø3.94″]	8mm	2	Ø61.9mm [Ø2.44″]	6.4 [.25]	**12**
STYLE 10 (KWZ165)	**DM/90**	Ø125mm [Ø4.92″]	M10	10	Ø125mm [Ø4.92″]	10mm	2	Ø79.5mm [Ø3.13″]	6.4 [.25]	**13**
STYLE 11 (KWUT120)	**90**	Ø120mm [Ø4.72″]	M8	8	Ø120mm [Ø4.92″]	8mm	2	N/A	N/A	**14**
STYLE 12 (FA710)	**DM**	Ø100mm [Ø3.94″]	M8	6	Ø100mm [Ø3.94″]	8mm	2	N/A	N/A	**15**
STYLE 14 (MMK100)	**90**	Ø125mm [Ø4.92″]	M10	6	Ø125mm [Ø4.92″]	10mm	2	Ø61mm [Ø2.40″]	6.4 [.25]	**16**
STYLE 15 (KA660)	**DM/90**	Ø160mm [Ø6.30″]	M12	6	Ø160mm [Ø6.30″]	12mm	1	Ø99mm [Ø3.90″]	6.4 [.25]	**17**
STYLE 16 (FA2000)	**DM**	Ø125mm [Ø4.92″]	M10	10	Ø125mm [Ø4.92″]	10mm	2	Ø79.5mm [Ø3.13″]	6.4 [.25]	**18**
STYLE 18 (MMHP165)	**DM/90**	Ø125mm [Ø4.92″]	M10	6	Ø125mm [Ø4.92″]	10mm	2	Ø62.5mm [Ø2.46″]	6.4 [.25]	**19**
STYLE 19 (MMHP165)	**90**	Ø92mm [Ø3.62″]	M10	6	Ø125mm [Ø4.92″]	9mm	2	Ø62.5mm [Ø2.46″]	6.4 [.25]	**20**
STYLE 21 (EOAMC30)	**DM**	Ø127mm [Ø5.00″]	3/8-16	6	Ø108mm [Ø4.25″]	.25″(in)	2	N/A	N/A	**21**
STYLE 22 (FA900-SSM)	**DM**	Ø125mm [Ø4.92″]	M10	6	Ø125mm [Ø4.92″]	10mm	2	Ø79.5mm [Ø3.13″]	4.8 [.19]	**21**
STYLE 23 (MD350)	**DM/90**	Ø187.3mm [Ø7.38″]	3/8-16	4	Ø187.3mm [Ø7.38″]	3/8	2	N/A	N/A	**22**
STYLE 24 (SA000)	**DM**	Ø69.5mm [Ø2.74″]	M10	4	N/A	N/A	N/A	N/A	N/A	**23**

Dimensions and technical information are subject to change without notice

Style 01 - ACMX58 90° Robot Adaptor (Ø90mm Bolt Circle/Ø80mm Dowel Circle)

Models Supported:
ACMA X58

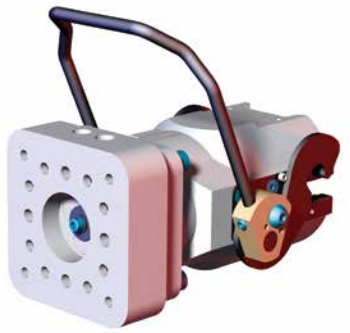

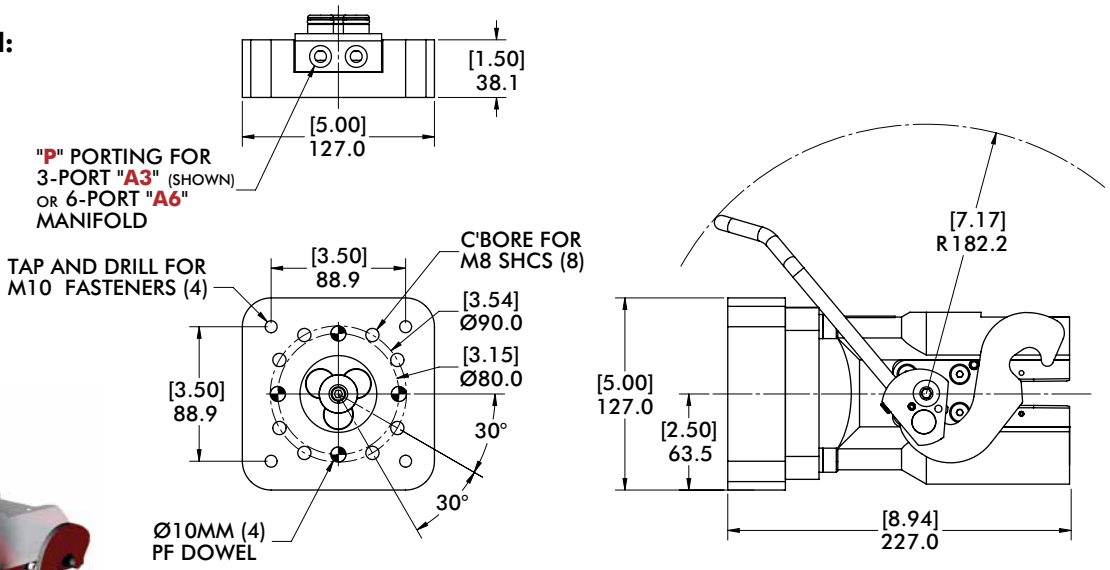

MODEL NUMBER	PORTING	# OF PORTS	WEIGHT
CPI-ACMX58-DM-RD25-A3	3/8 NPT	3 (2/1)	.75 kg [1.66 lb]
CPI-ACMX58-DM-RD25-A6	1/8 NPT	6 (3/3)	.79 kg [1.74 lb]

Style 01 - ACMX58 90° Robot Adaptor (Ø90mm Bolt Circle/Ø80mm Dowel Circle)

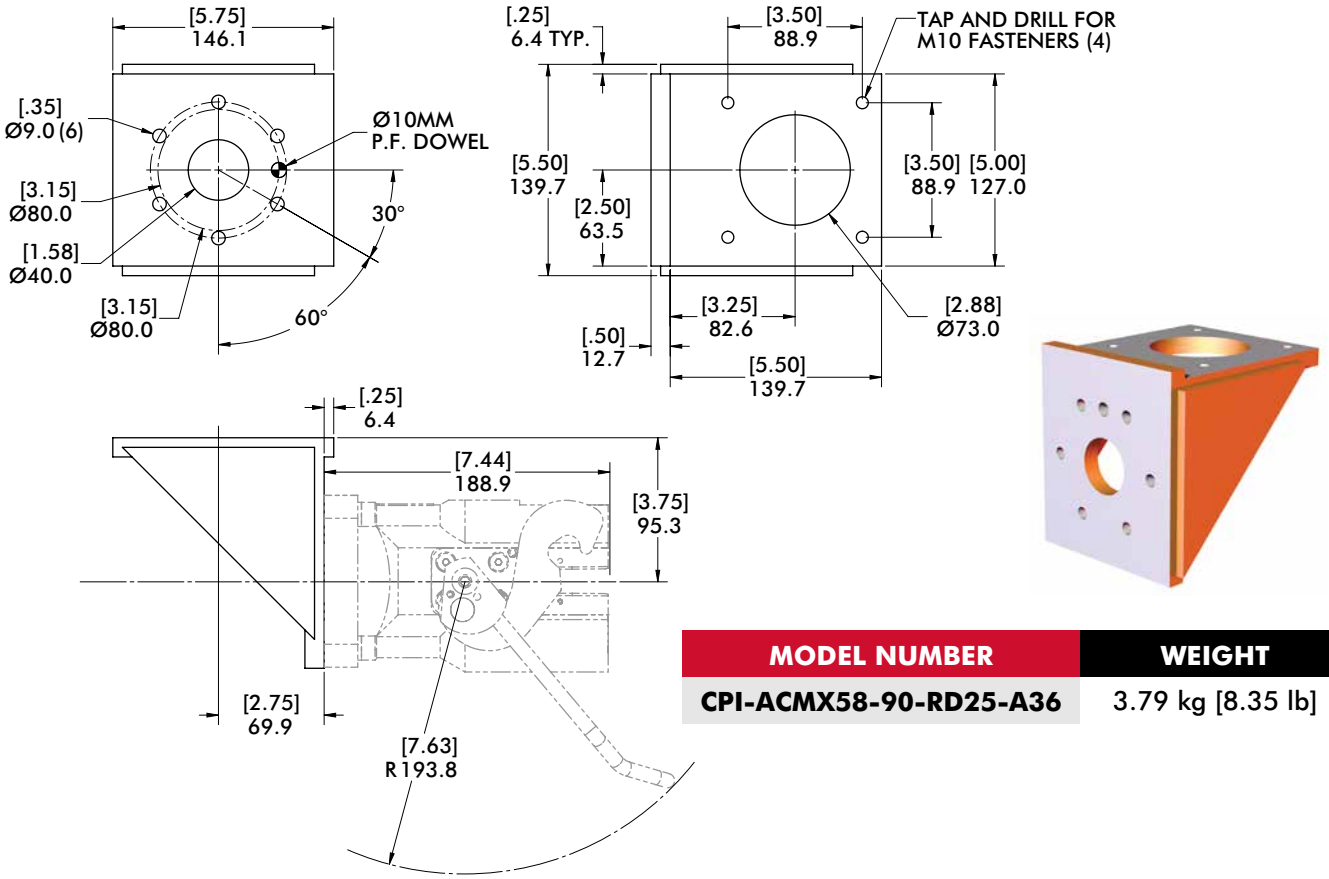

MODEL NUMBER	WEIGHT
CPI-ACMX58-90-RD25-A36	3.79 kg [8.35 lb]

FA500

Robot Automation Adaptors | Dimensions

Style 02 - **FA500** Direct Mount Adaptor (Ø90mm Bolt Circle)

Models Supported:
FANUC M-400
FANUC M-500
FANUC S-420 (WITH FANUC FLANGE)

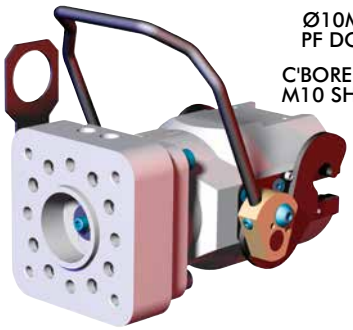

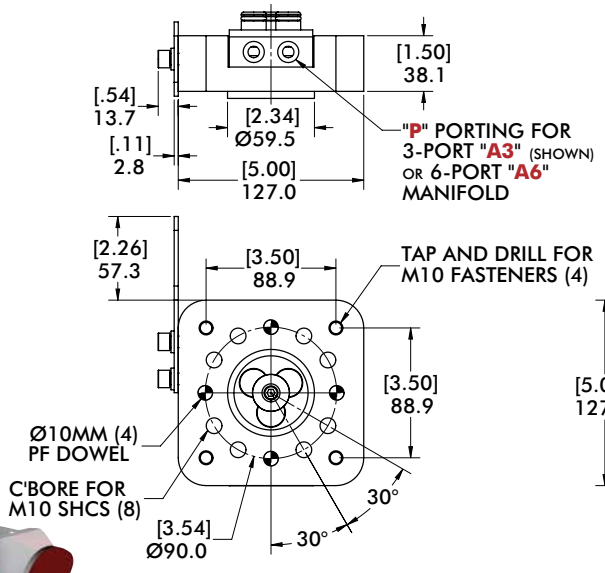

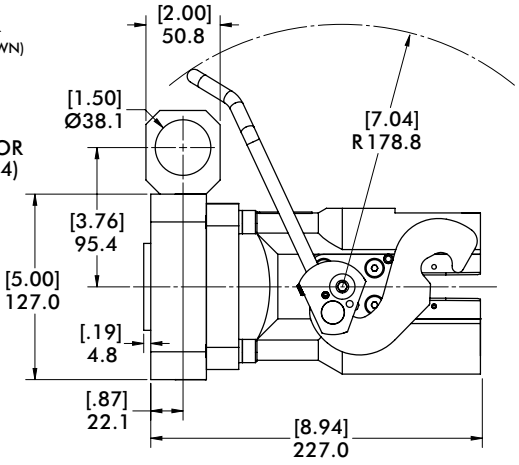

MODEL NUMBER	PORTING	# OF PORTS	WEIGHT
CPI-FA500-DM-RD25-A3	3/8 NPT	3 (2/1)	1.46 kg [3.21 lb]
CPI-FA500-DM-RD25-A6	1/8 NPT	6 (3/3)	1.50 kg [3.30 lb]

Style 02 - **FA500** 90° Robot Adaptor (Ø90mm Bolt Circle)

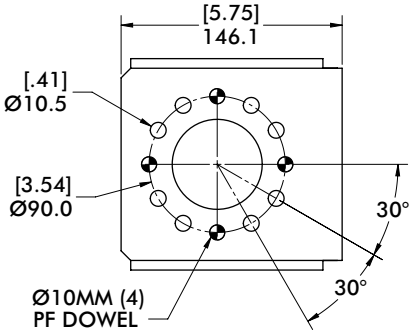

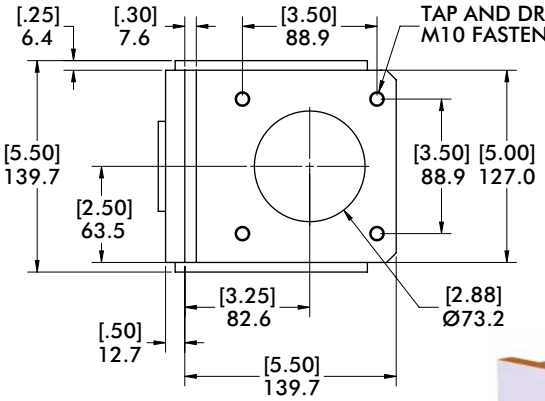

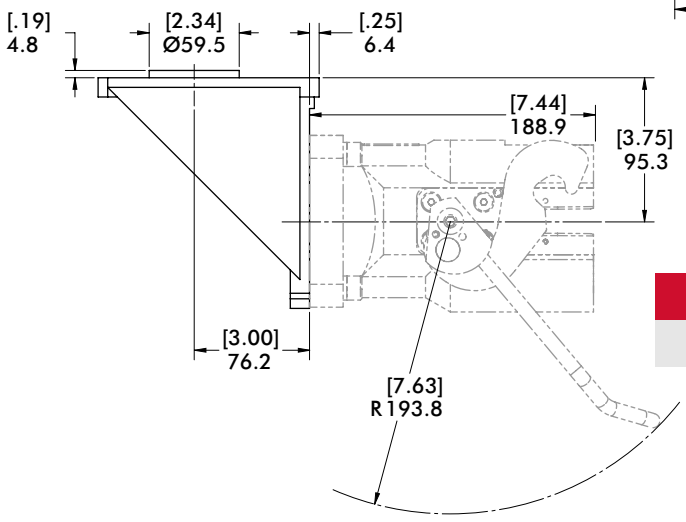

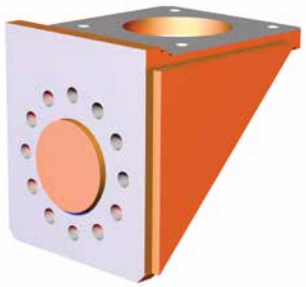

MODEL NUMBER	WEIGHT
CPI-FA500-90-RD25-A36	3.98 kg [8.77 lb]

Style 03 - KW150 90° Robot Adaptor (Ø92mm Bolt Circle)

Models Supported:
KAWASAKI UX100
KAWASAKI UX120
KAWASAKI UX150

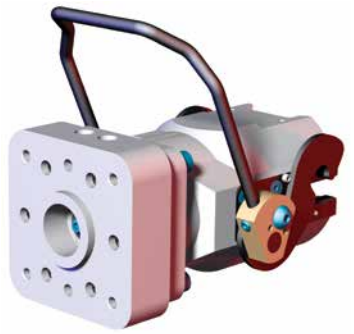

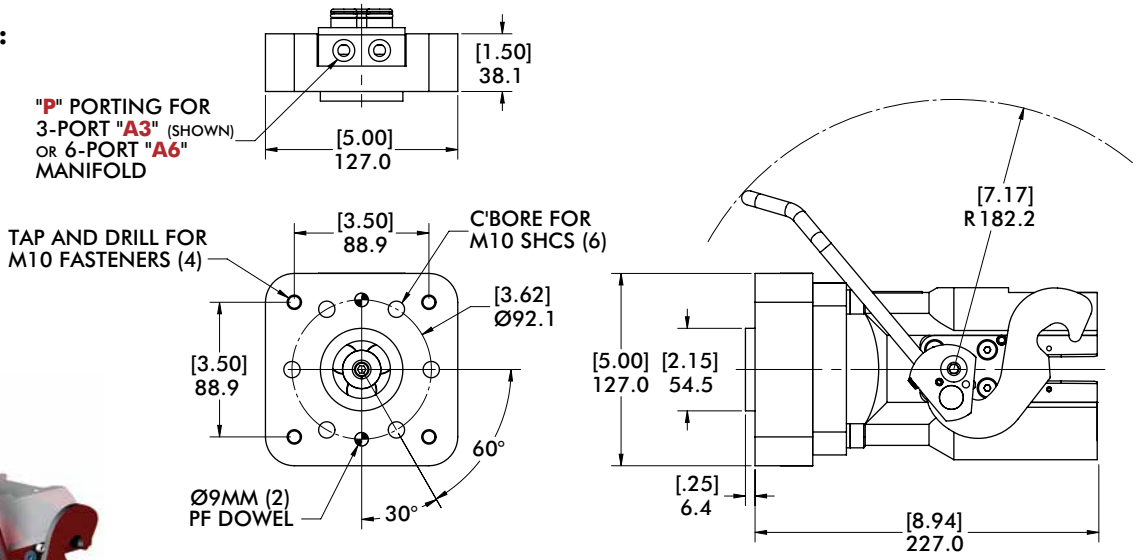

MODEL NUMBER	PORTING	# OF PORTS	WEIGHT
CPI-KW150-DM-RD25-A3	3/8 NPT	3 (2/1)	1.45 kg [3.19 lb]
CPI-KW150-DM-RD25-A6	1/8 NPT	6 (3/3)	1.49 kg [3.28 lb]

Style 03 - KW150 90° Robot Adaptor (Ø92mm Bolt Circle)

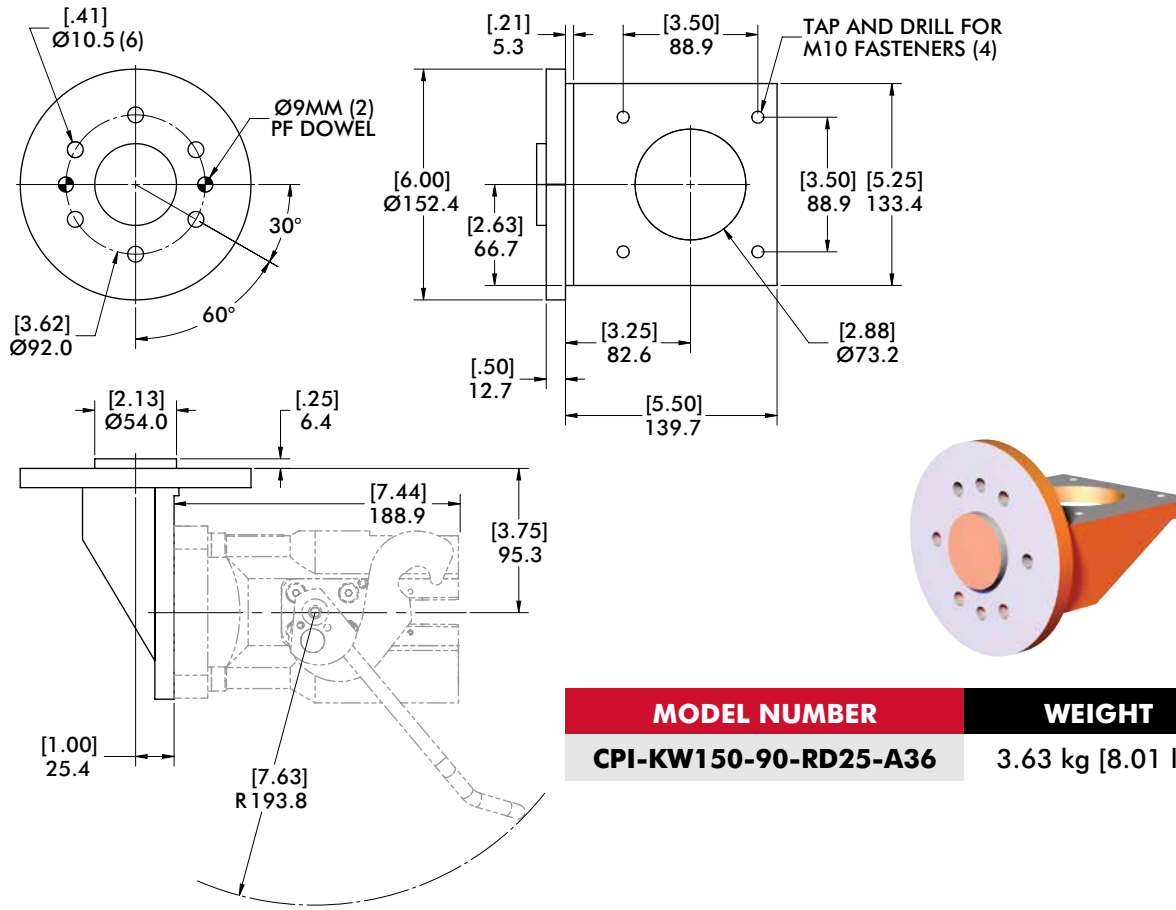

MODEL NUMBER	WEIGHT
CPI-KW150-90-RD25-A36	3.63 kg [8.01 lb]

FA900

Robot Automation Adaptors | Dimensions

Style 04 - **FA900** Direct Mount Adaptor (Ø125mm Bolt Circle)

Models Supported:
ABB IRB 60(00)
ABB IRB 64(00)
FANUC R-2000I(6-BOLT)
FANUC M-410
FANUC S-900
MOTOMAN SP100X

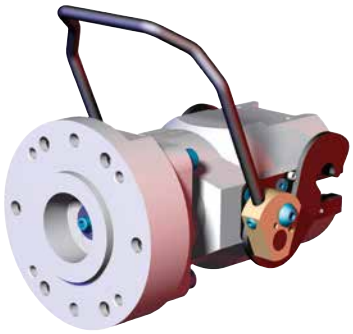

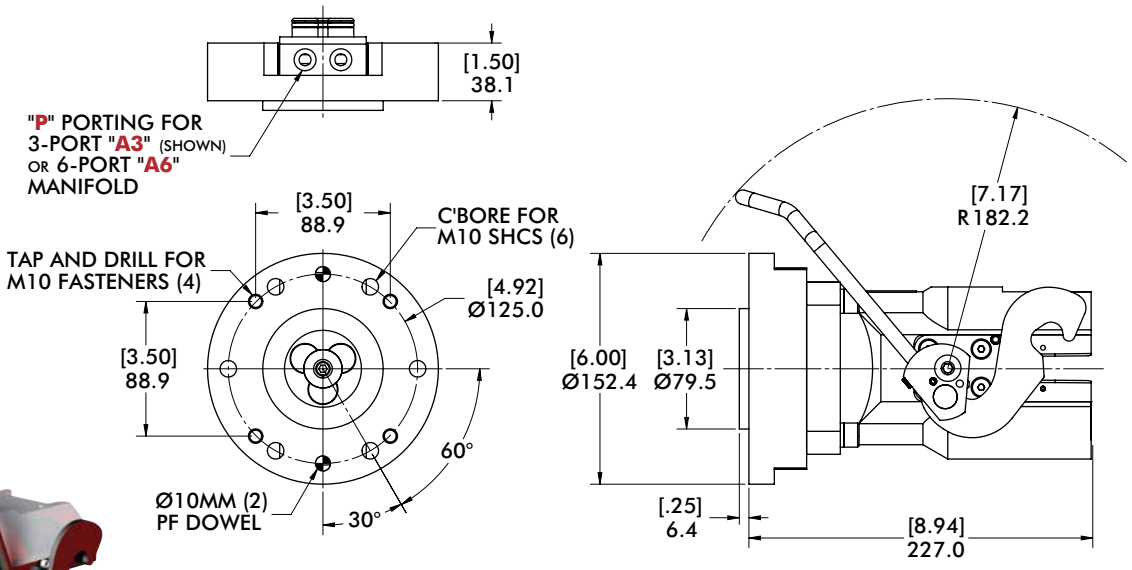

MODEL NUMBER	PORTING	# OF PORTS	WEIGHT
CPI-FA900-DM-RD25-A3	3/8 NPT	3 (2/1)	1.58 kg [3.48 lb]
CPI-FA900-DM-RD25-A6	1/8 NPT	6 (3/3)	1.62 kg [3.57 lb]

Style 04 - **FA900** 90° Robot Adaptor (Ø125mm Bolt Circle)

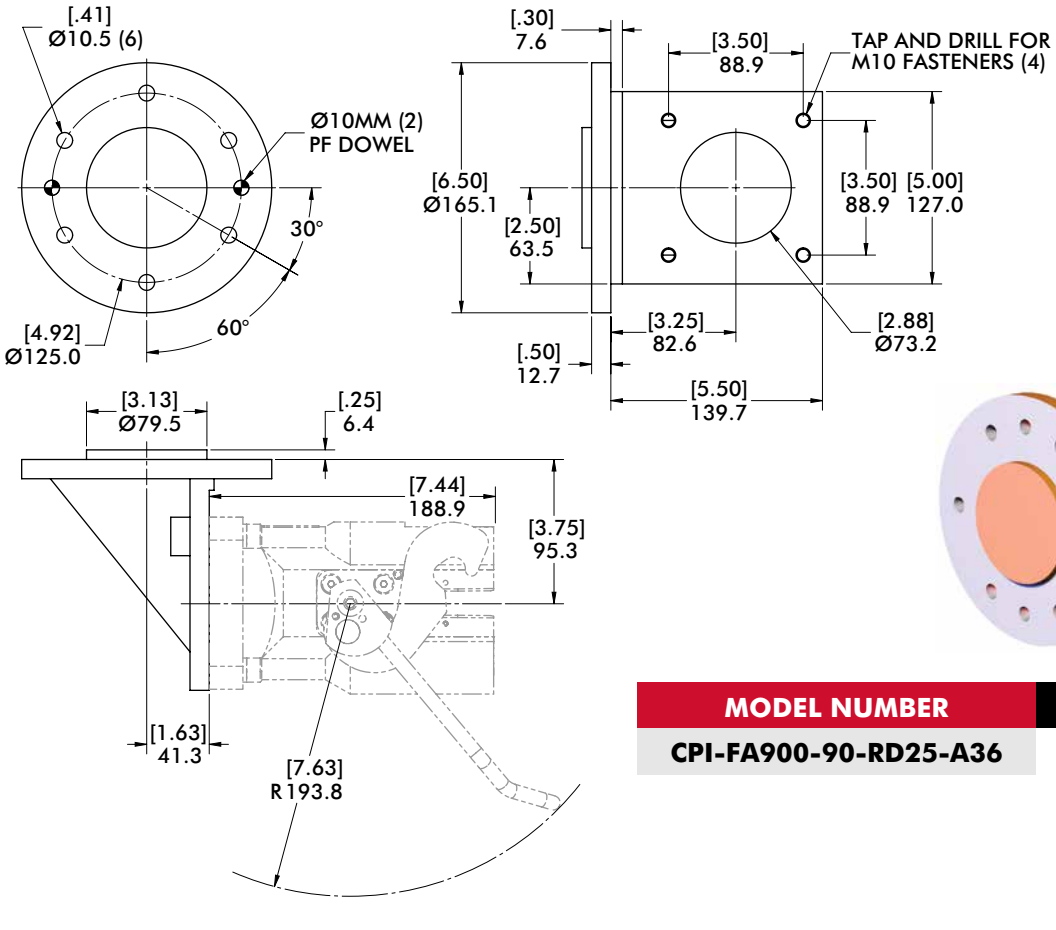

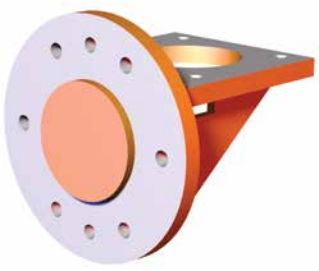

MODEL NUMBER	WEIGHT
CPI-FA900-90-RD25-A36	4.13 kg [9.12 lb]

Dimensions and technical information are subject to change without notice

Style 05 - **KA760** Direct Mount Adaptor (Ø160mm Bolt Circle)

Models Supported:
KUKA IW 125
KUKA PL 150
KUKA IW 150
KUKA PL 125
KUKA KR 125
KUKA ZH 125
KUKA IR 760
KUKA ZH 150

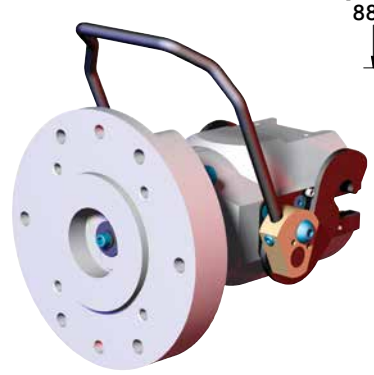

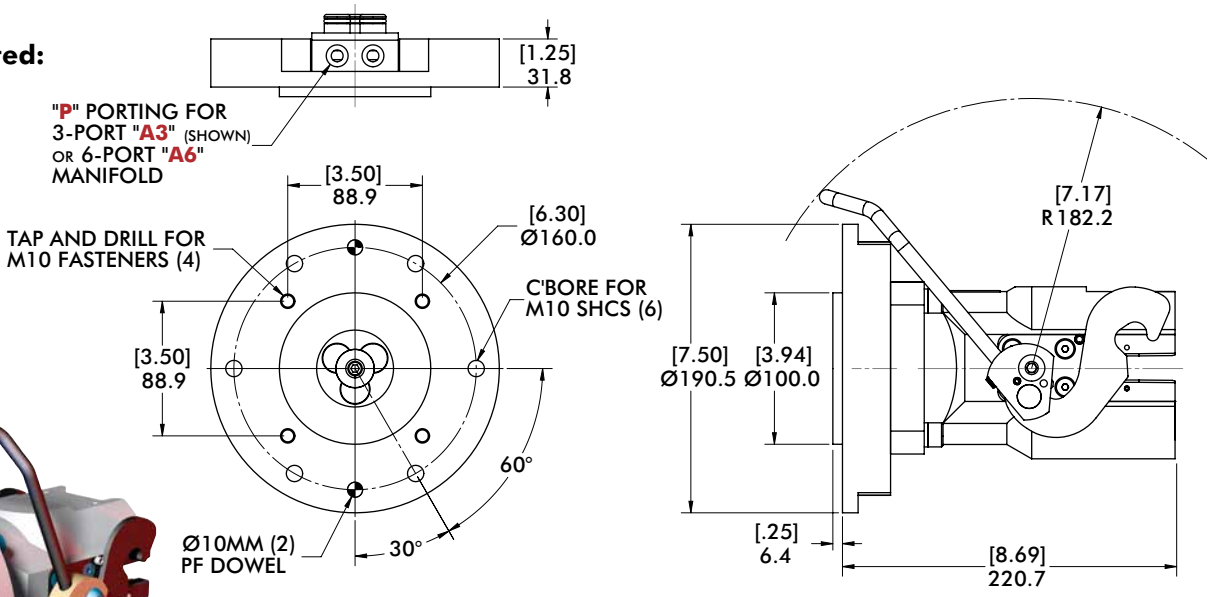

MODEL NUMBER	PORTING	# OF PORTS	WEIGHT
CPI-KA760-DM-RD25-A3	3/8 NPT	3 (2/1)	2.12 kg [4.66 lb]
CPI-KA760-DM-RD25-A6	1/8 NPT	6 (3/3)	2.15 kg [4.75 lb]

Style 05 - **KA760** 90° Robot Adaptor (Ø160mm Bolt Circle)

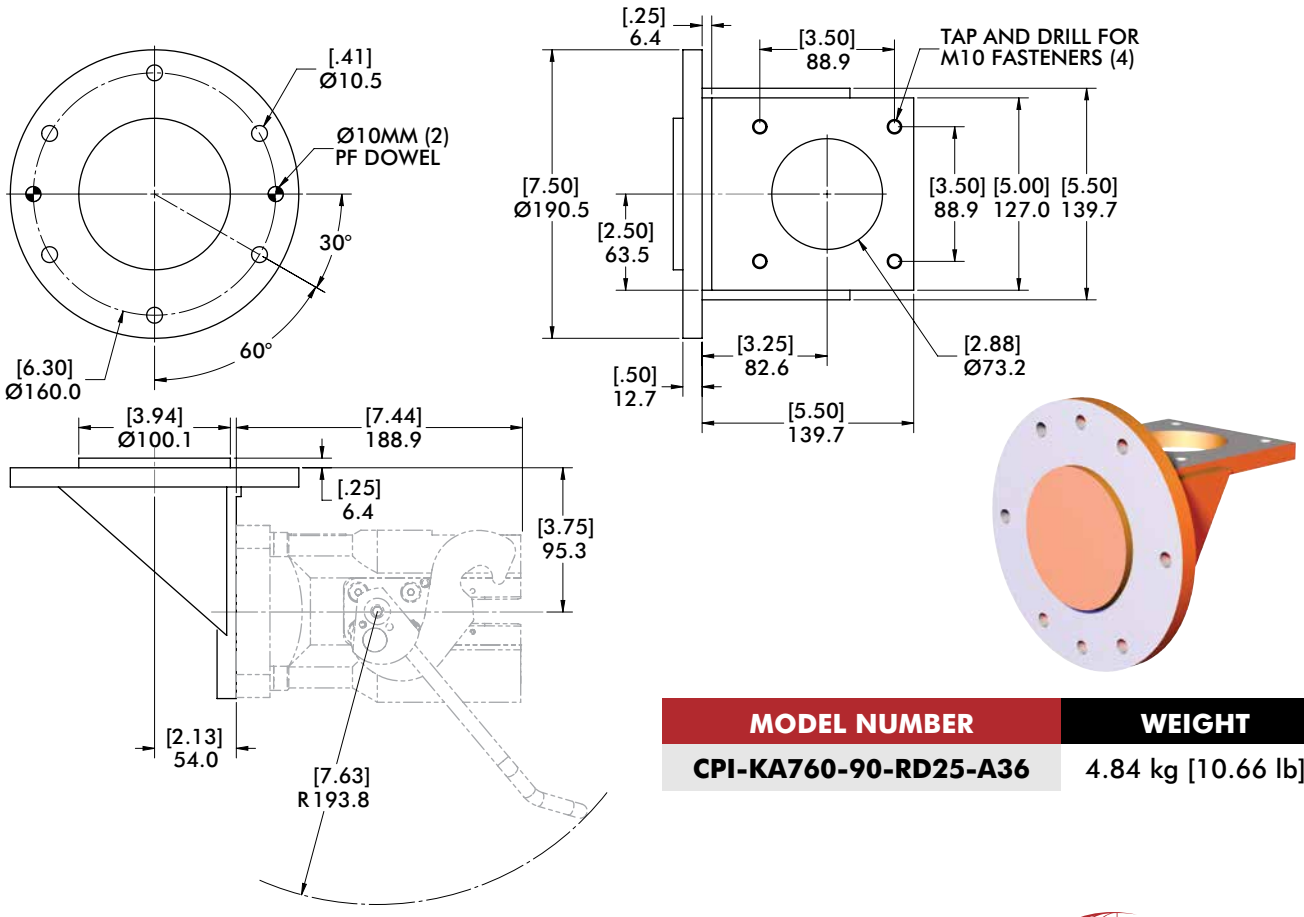

MODEL NUMBER	WEIGHT
CPI-KA760-90-RD25-A36	4.84 kg [10.66 lb]

MMNY300

Robot Automation Adaptors | Dimensions

Style 06 - **MMNY300** Direct Mount Adaptor (Ø200mm Bolt Circle)

Models Supported:
MOTOMAN SP100X
KUKA KR 350

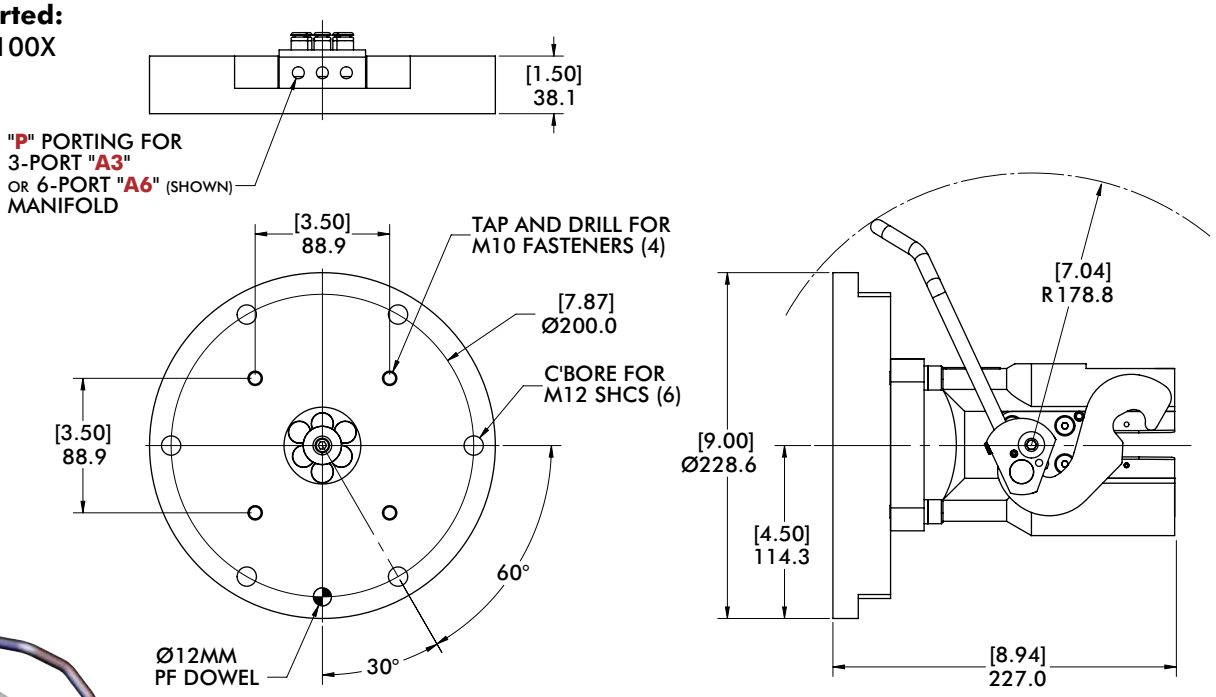

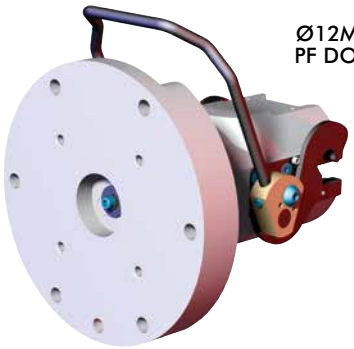

MODEL NUMBER	PORTING	# OF PORTS	WEIGHT
CPI-MMNY300-DM-RD25-A3	3/8 NPT	3 (2/1)	3.56 kg [7.84 lb]
CPI-MMNY300-DM-RD25-A6	1/8 NPT	6 (3/3)	3.61 kg [7.95 lb]

Style 07 - **FA430i** Direct Mount Adaptor (Ø125mm Bolt Circle)

Models Supported:
FANUC S430I

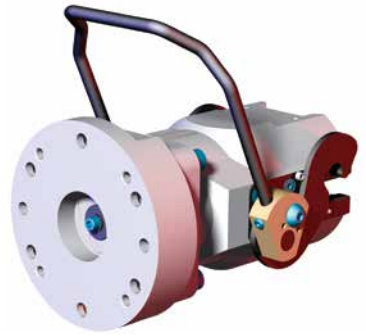

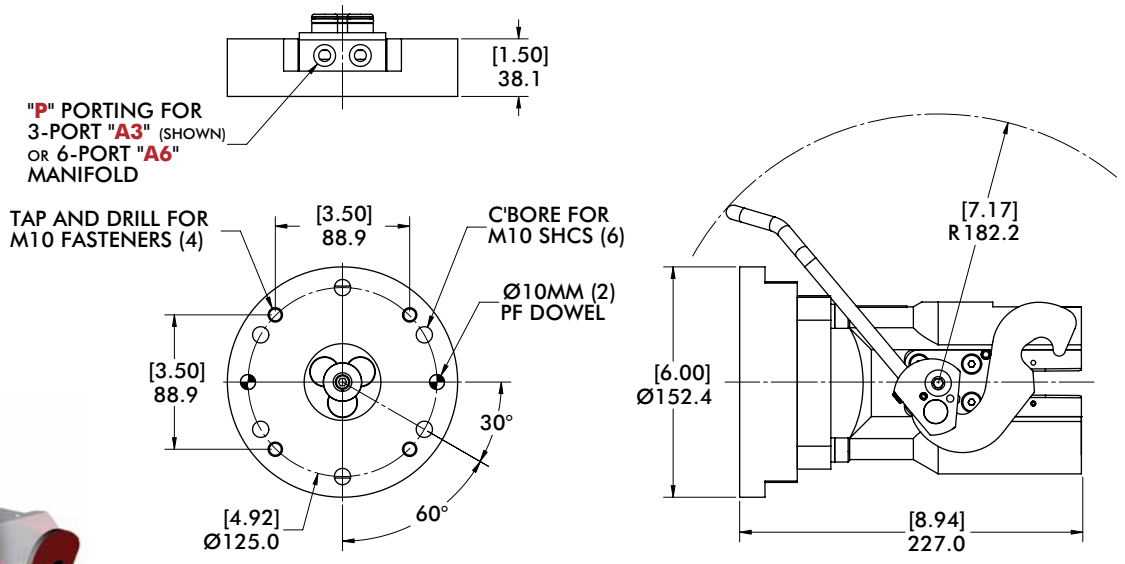

MODEL NUMBER	PORTING	# OF PORTS	WEIGHT
CPI-FA430i-DM-RD25-A3	3/8 NPT	3 (2/1)	1.52 kg [3.36 lb]
CPI-FA430i-DM-RD25-A6	1/8 NPT	6 (3/3)	1.56 kg [3.44 lb]

Style 07 - **FA430i** 90° Robot Adaptor (Ø125mm Bolt Circle)

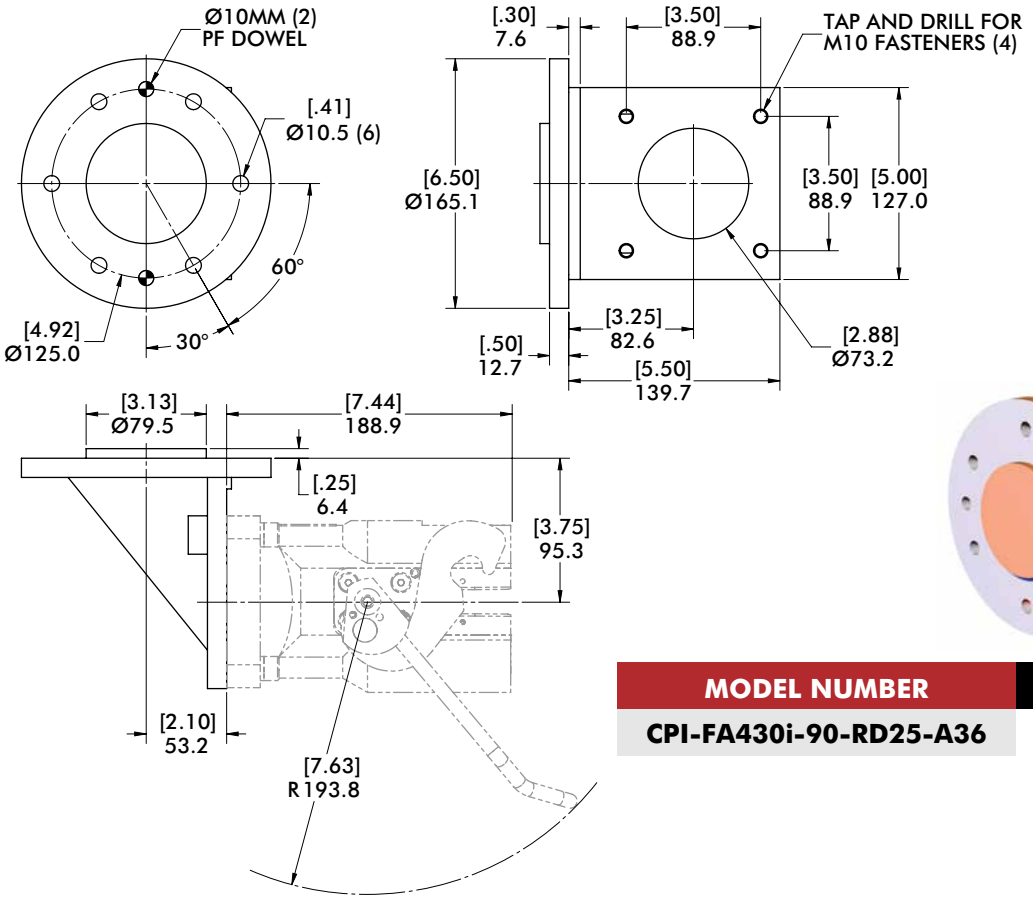

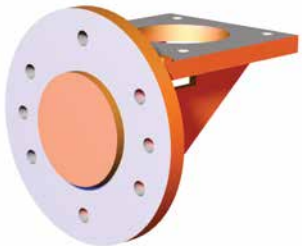

MODEL NUMBER	WEIGHT
CPI-FA430i-90-RD25-A36	4.13 kg [9.12 lb]

FA420

Robot Automation Adaptors | Dimensions

Style 08 - **FA420** Direct Mount Adaptor (Ø92mm Bolt Circle)

Models Supported:
FANUC S420 (WITH SPECIAL FLANGE)

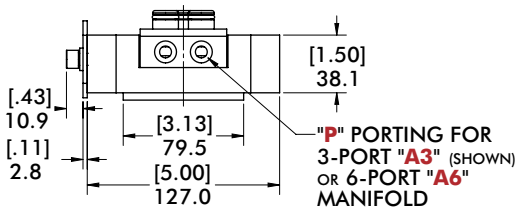

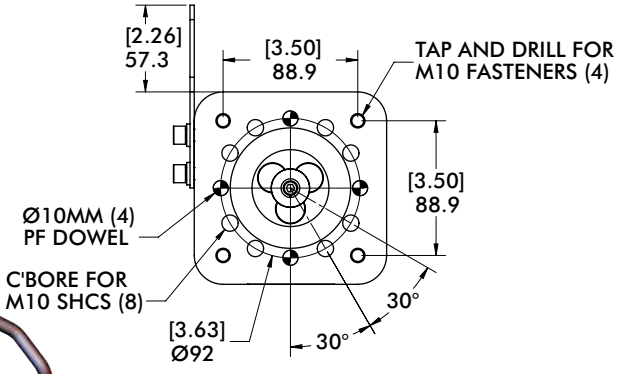

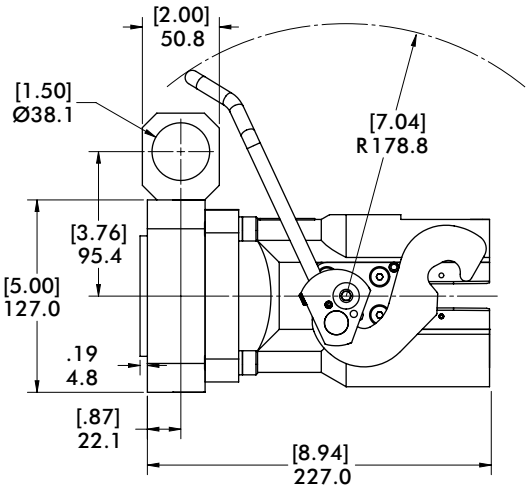

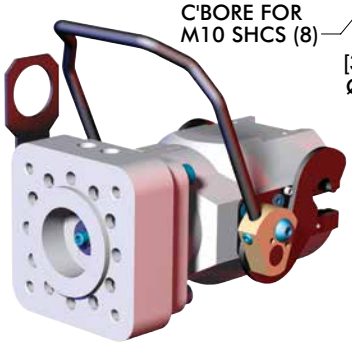

MODEL NUMBER	PORTING	# OF PORTS	WEIGHT
CPI-FA420-DM-RD25-A3-SPC	3/8 NPT	3 (2/1)	1.48 kg [3.27 lb]
CPI-FA420-DM-RD25-A6-SPC	1/8 NPT	6 (3/3)	1.52 kg [3.35 lb]

Style 09 - ABB44 Direct Mount Adaptor (Ø100mm Bolt Circle)

Models Supported:
ABB IRB 4400/S
ABB IRB 4400/60
ABB IRB 4400/45
ABB IRB 4400/L30



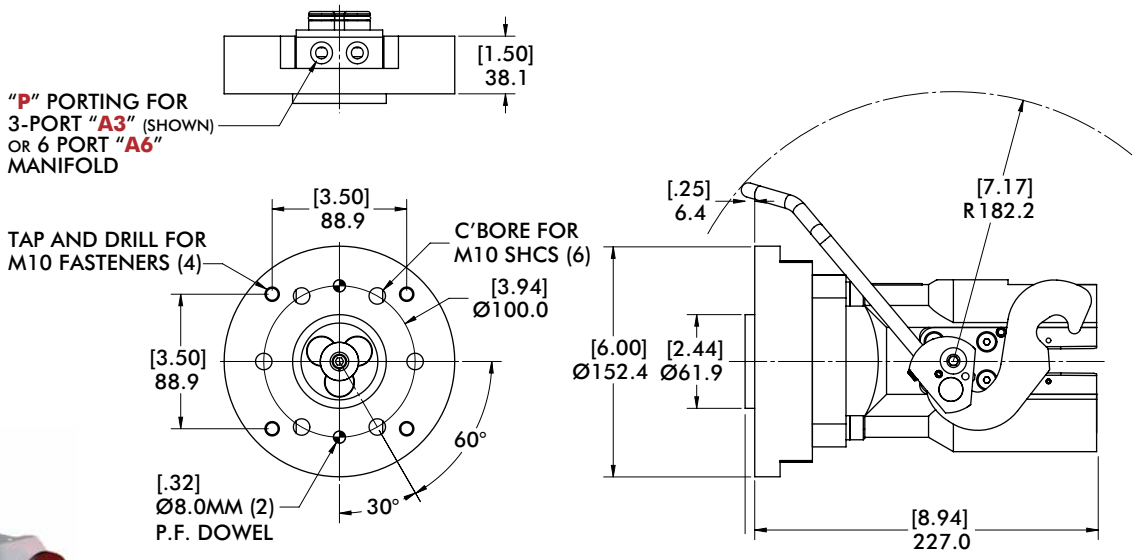

MODEL NUMBER	PORTING	# OF PORTS	WEIGHT
CPI-ABB44-DM-RD25-A3	3/8 NPT	3 (2/1)	1.57 kg [3.47 lb]
CPI-ABB44-DM-RD25-A6	1/8 NPT	6 (3/3)	1.61 kg [3.55 lb]

Style 09 - ABB44 90° Robot Adaptor (Ø100mm Bolt Circle)

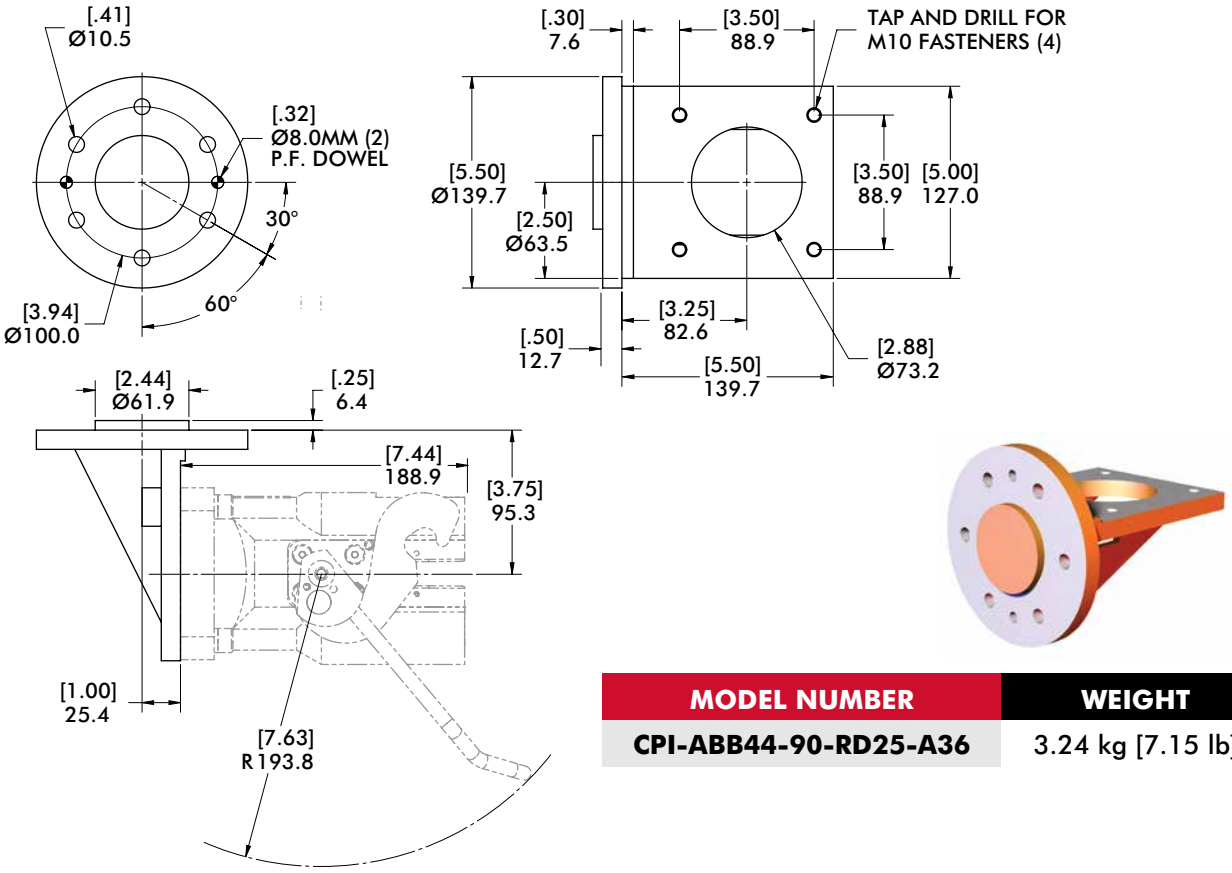

MODEL NUMBER	WEIGHT
CPI-ABB44-90-RD25-A36	3.24 kg [7.15 lb]

KWZ165

Robot Automation Adaptors | Dimensions

Style 10 - **KWZ165** Direct Mount Adaptor (Ø125mm Bolt Circle)

Models Supported:
KAWASAKI Z165

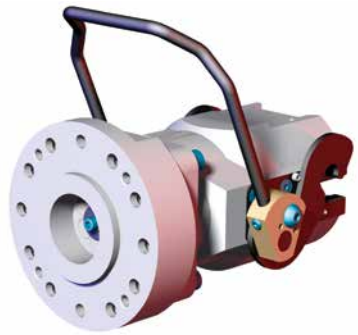

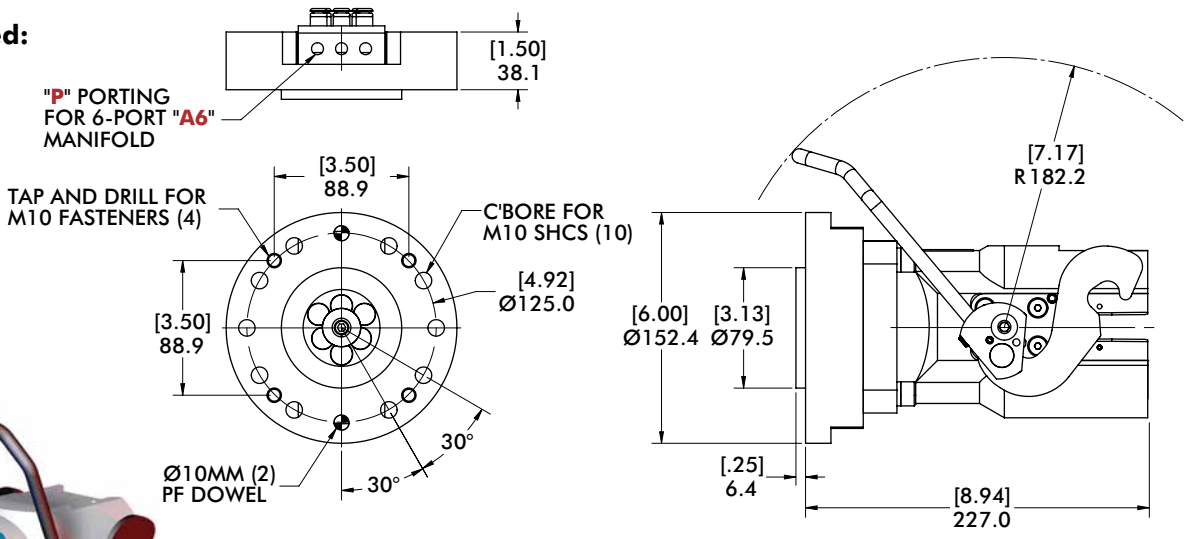

MODEL NUMBER	PORTING	# OF PORTS	WEIGHT
CPI-KWZ165-DM-RD25-A3	3/8 NPT	3 (2/1)	1.49 kg [3.28 lb]
CPI-KWZ165-DM-RD25-A6	1/8 NPT	6 (3/3)	1.53 kg [3.38 lb]

Style 10 - **KWZ165** 90° Robot Adaptor (Ø125mm Bolt Circle)

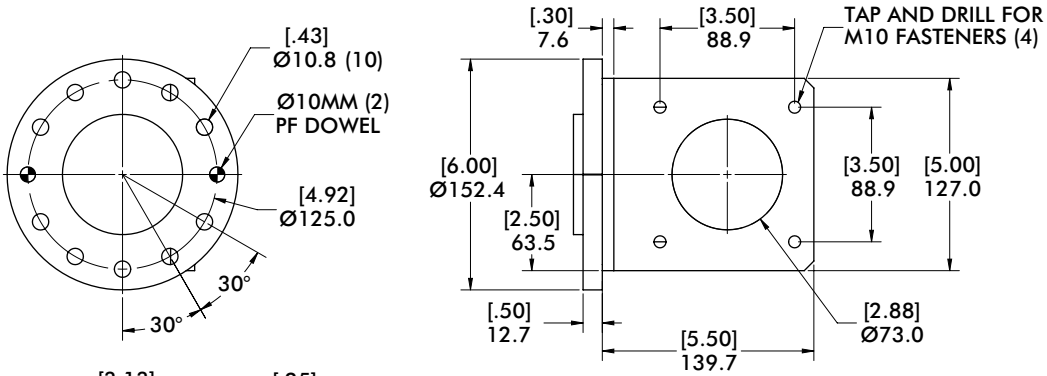

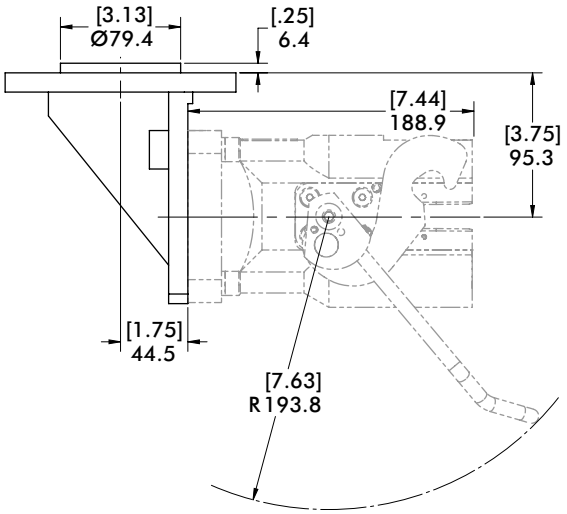

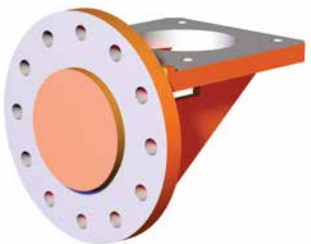

MODEL NUMBER	WEIGHT
CPI-KWZ165-90-RD25-A36	3.71 kg [8.18 lb]

Dimensions and technical information are subject to change without notice

Style 11 - **KWUT120** 90° Adaptor (Ø120mm Bolt Circle)

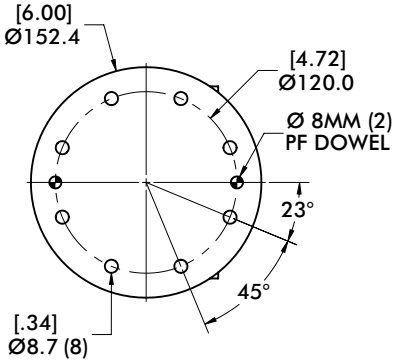

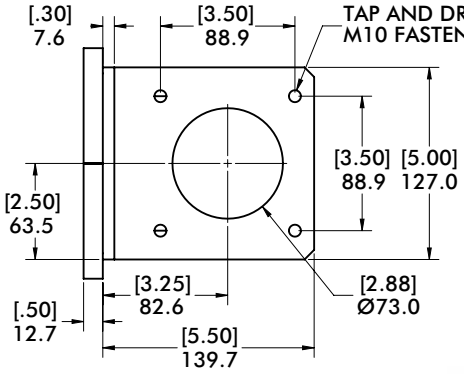

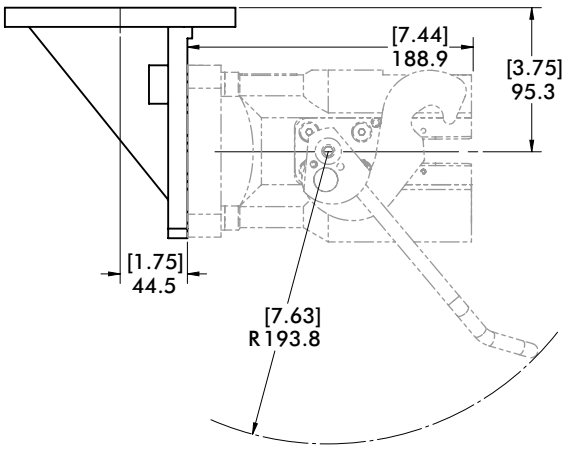



Models Supported:
KAWASAKI UT120

MODEL NUMBER	WEIGHT
CPI-KWUT120-90-RD25-A36	3.58 kg [7.90 lb]

FA710

Robot Automation Adaptors | Dimensions

Style 12 - **FA710** Direct Mount Adaptor (Ø100mm Bolt Circle)

Models Supported:
FANUC M710

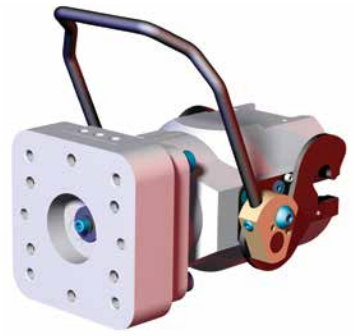

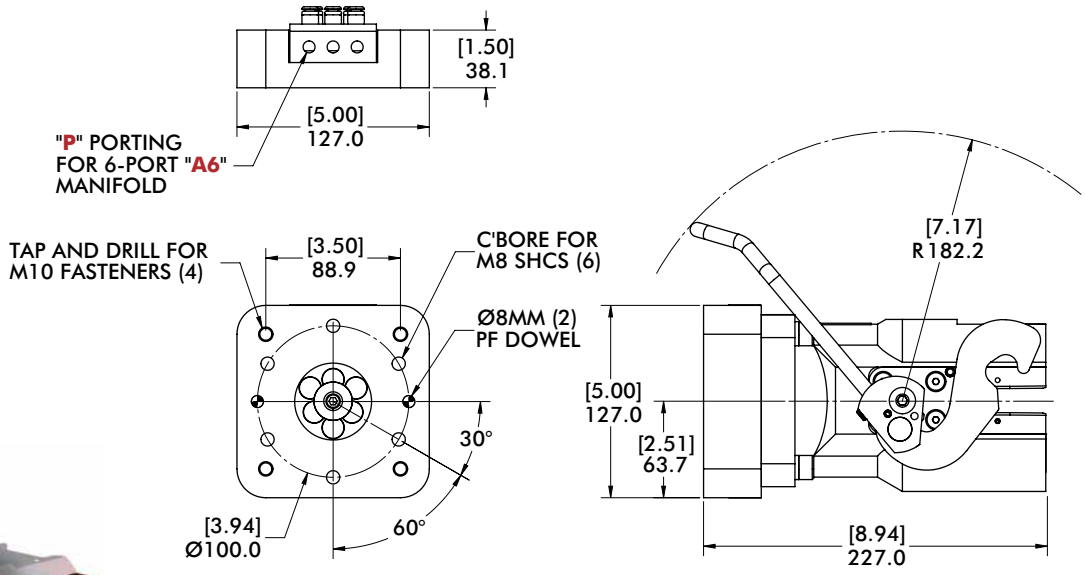

MODEL NUMBER	PORTING	# OF PORTS	WEIGHT
CPI-FA710-DM-RD25-A6	1/8 NPT	6 (3/3)	1.43 kg [3.15 lb]

Style 14 - **MMK100** 90° Adaptor (Ø125mm Bolt Circle)

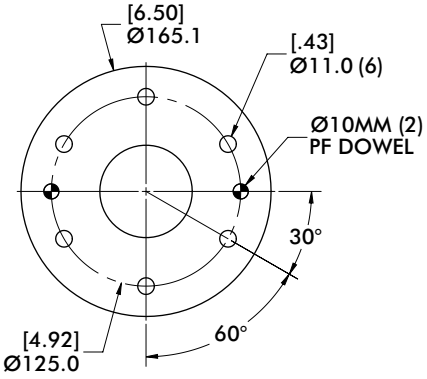

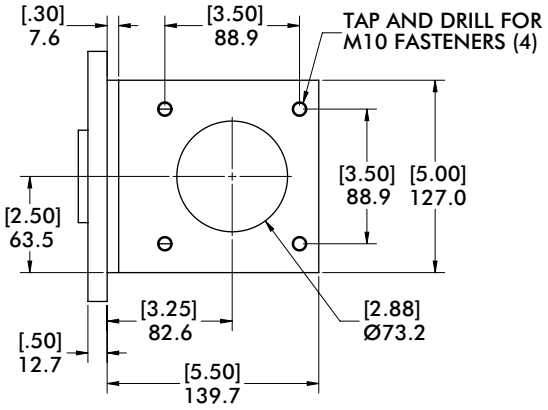

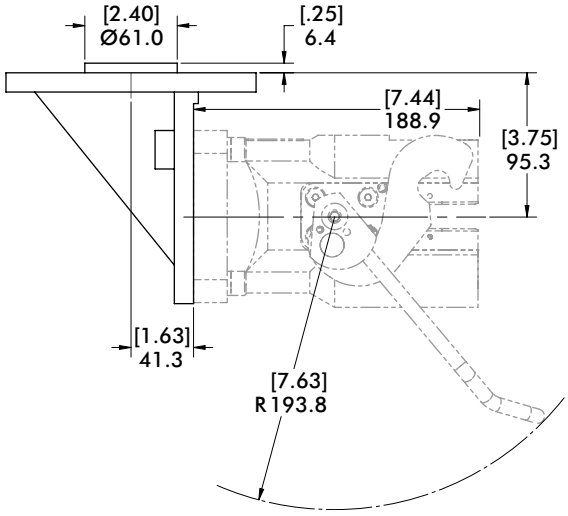

Models Supported:
COMAU CMH3.2
MOTOMAN K100
MOTOMAN UP130

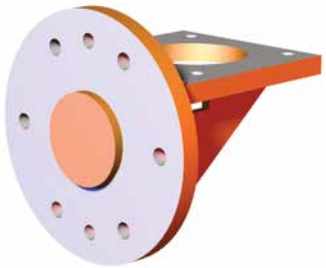

MODEL NUMBER	WEIGHT
CPI-MMK100-90-RD25-A36	4.03 kg [8.88 lb]

KA660

Robot Automation Adaptors | Dimensions

Style 15 - **KA660** Direct Mount Adaptor (Ø160mm Bolt Circle)

Models Supported:
KUKA 660

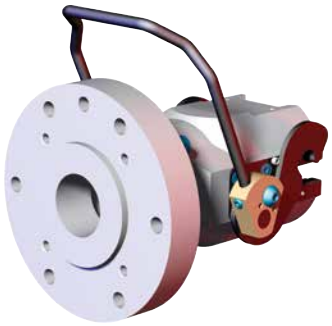

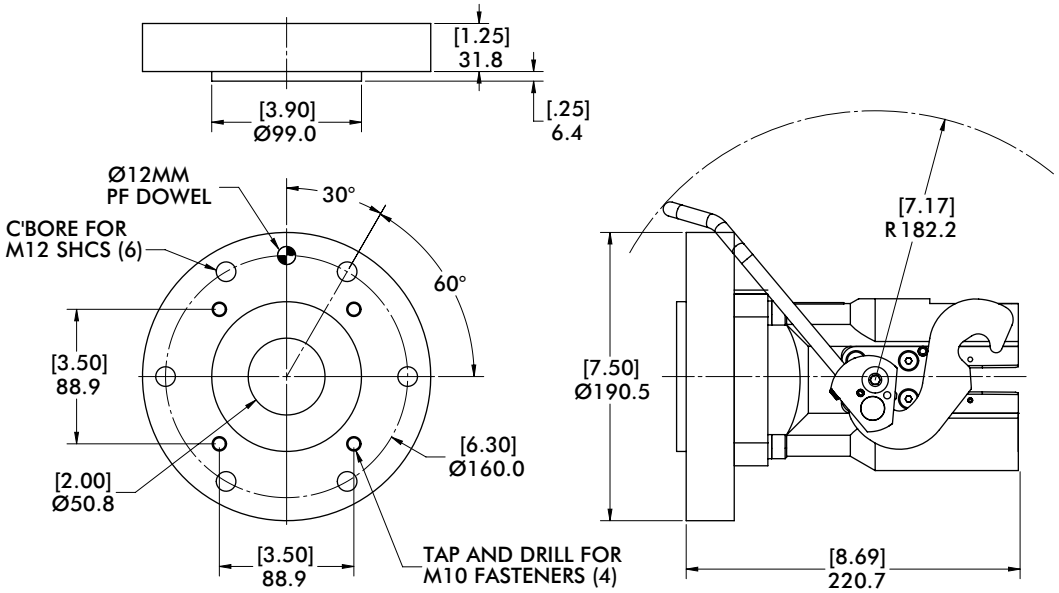

MODEL NUMBER	PORTING	# OF PORTS	WEIGHT
CPI-KA660-DM-RD25-00	N/A	N/A	2.23 kg [4.92 lb]

Style 15 - **KA660** 90° Robot Adaptor (Ø160mm Bolt Circle)

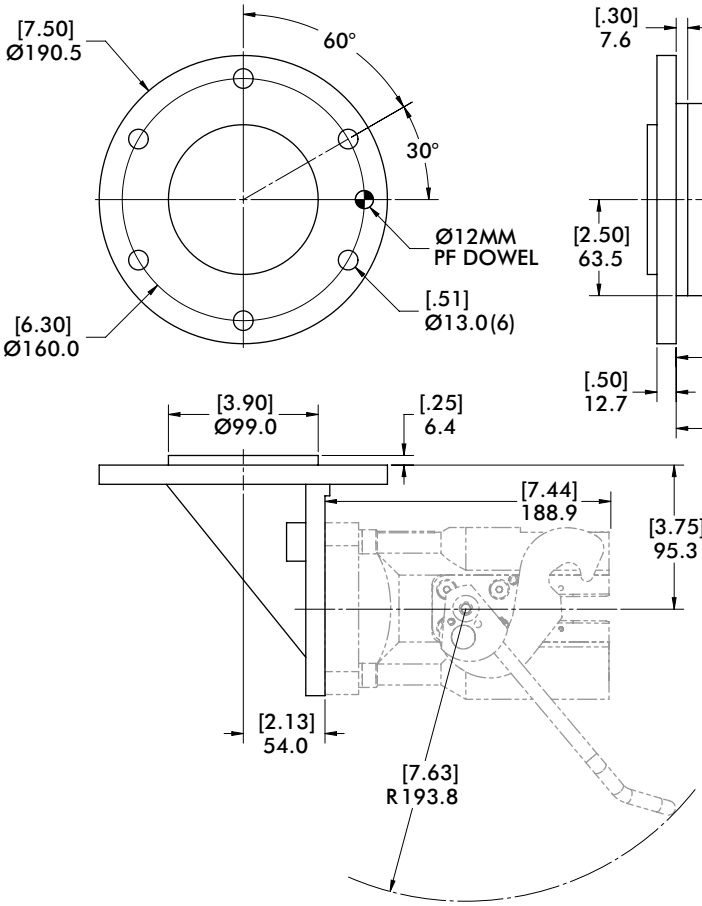

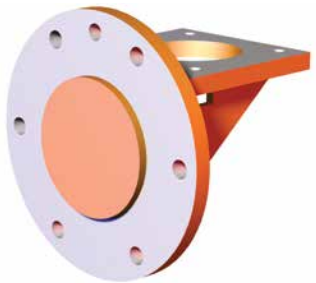

MODEL NUMBER	WEIGHT
CPI-KA660-90-RD25-A36	4.95 kg [10.91 lb]

Dimensions and technical information are subject to change without notice

Style 16 - FA2000 Direct Mount Adaptor (Ø125mm Bolt Circle)

Models Supported:
FANUC R2000I

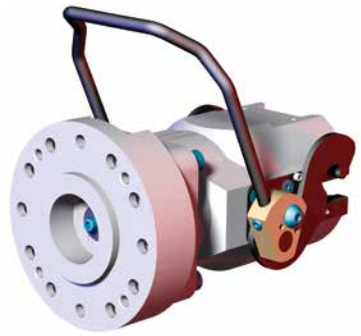

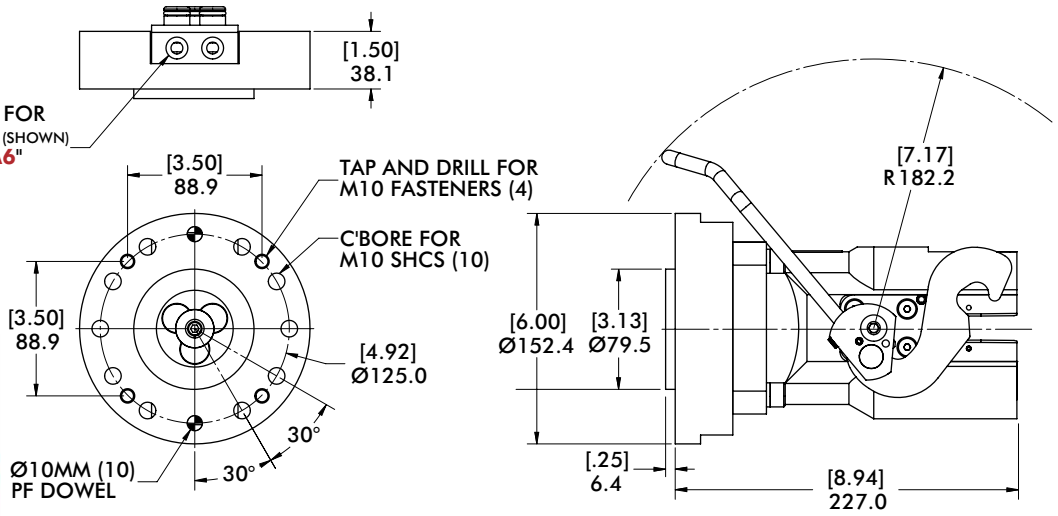

MODEL NUMBER	PORTING	# OF PORTS	WEIGHT
CPI-FA2000-DM-RD25-A3	3/8 NPT	3 (2/1)	1.50 kg [3.31 lb]
CPI-FA2000-DM-RD25-A6	1/8 NPT	6 (3/3)	1.54 kg [3.40 lb]

Style 16 - FA2000 90° Robot Adaptor (Ø125mm Bolt Circle)

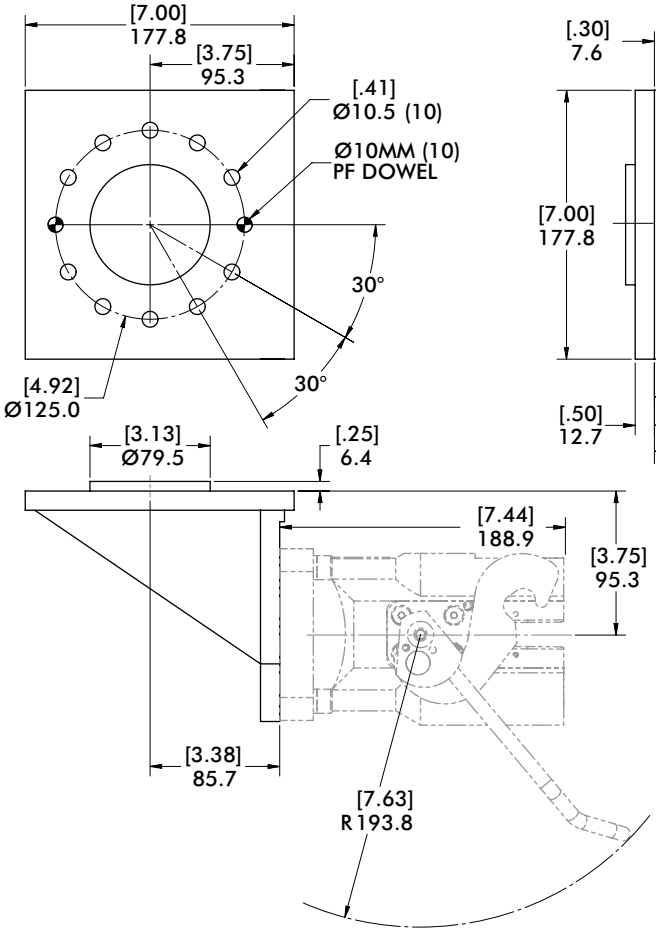



MODEL NUMBER	WEIGHT
CPI-FA2000-90-RD25-A36	5.94 kg [13.10 lb]

MMHP165

Robot Automation Adaptors | Dimensions

Style 15 - KA660 Direct Mount Adaptor (Ø160mm Bolt Circle)

Models Supported:
MOTOMAN ES165N
MOTOMAN HP165



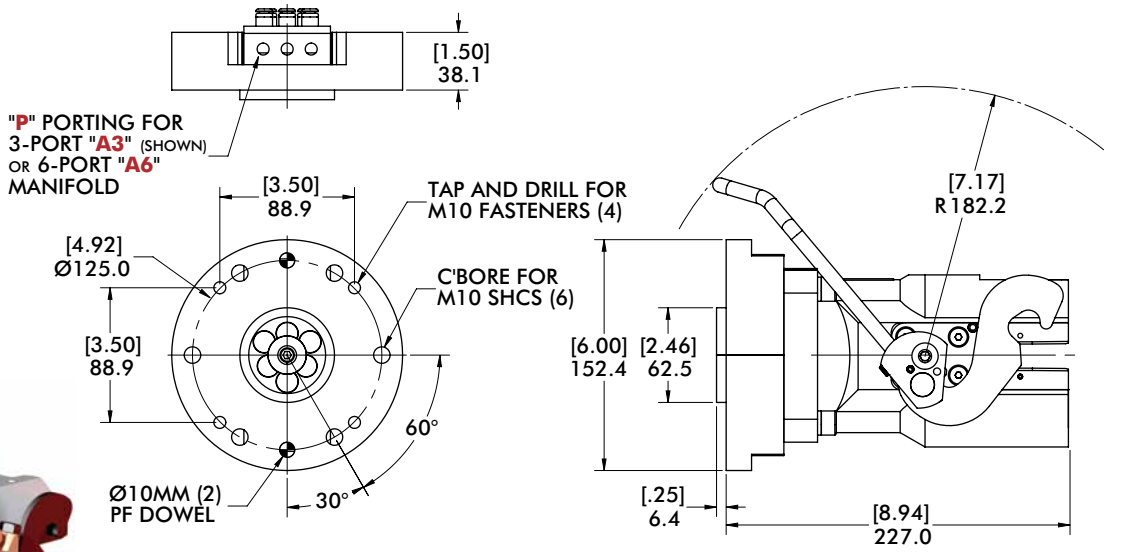

MODEL NUMBER	PORTING	# OF PORTS	WEIGHT
CPI-MMHP165-125-DM-RD25-A3	3/8 NPT	3 (2/1)	1.55 kg [3.41 lb]
CPI-MMHP165-125-DM-RD25-A6	1/8 NPT	6 (3/3)	1.58 kg [3.49 lb]

Style 15 - KA660 90° Robot Adaptor (Ø125mm Bolt Circle)

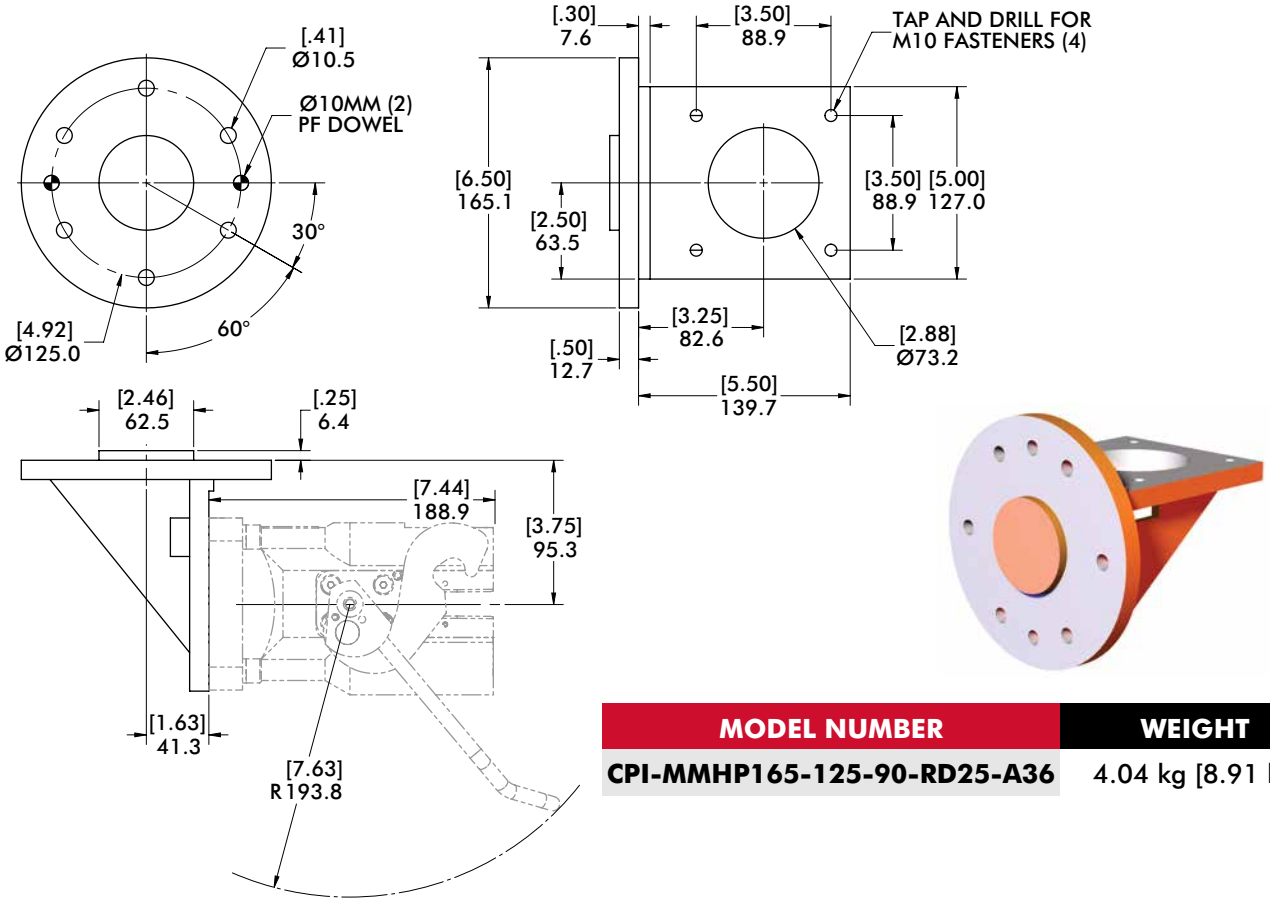

MODEL NUMBER	WEIGHT
CPI-MMHP165-125-90-RD25-A36	4.04 kg [8.91 lb]

Dimensions and technical information are subject to change without notice

Style 19 - **MMHP165** 90° Adaptor (Ø92mm Bolt Circle)

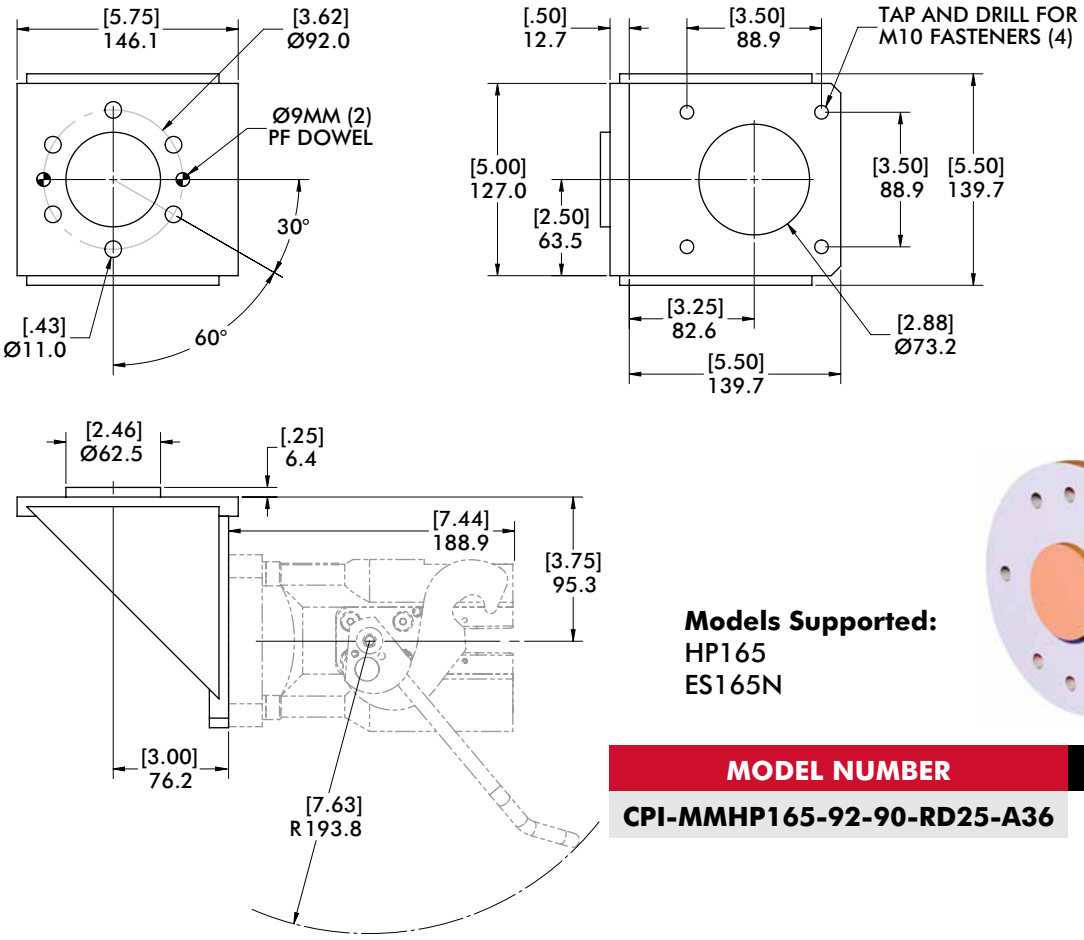

Models Supported:
HP165
ES165N



MODEL NUMBER	WEIGHT
CPI-MMHP165-92-90-RD25-A36	4.03 kg [8.89 lb]

EOAMC30, FA900-SSM

Robot Automation Adaptors | Dimensions

Style 21 - **EOAMC30** Direct Mount Adaptor (Ø127mm Bolt Circle/Ø108mm Dowel Circle)

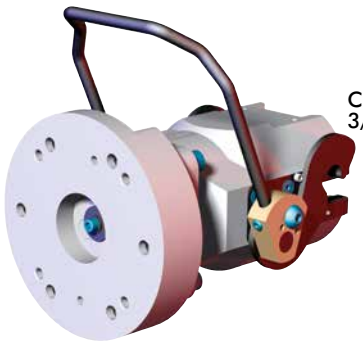

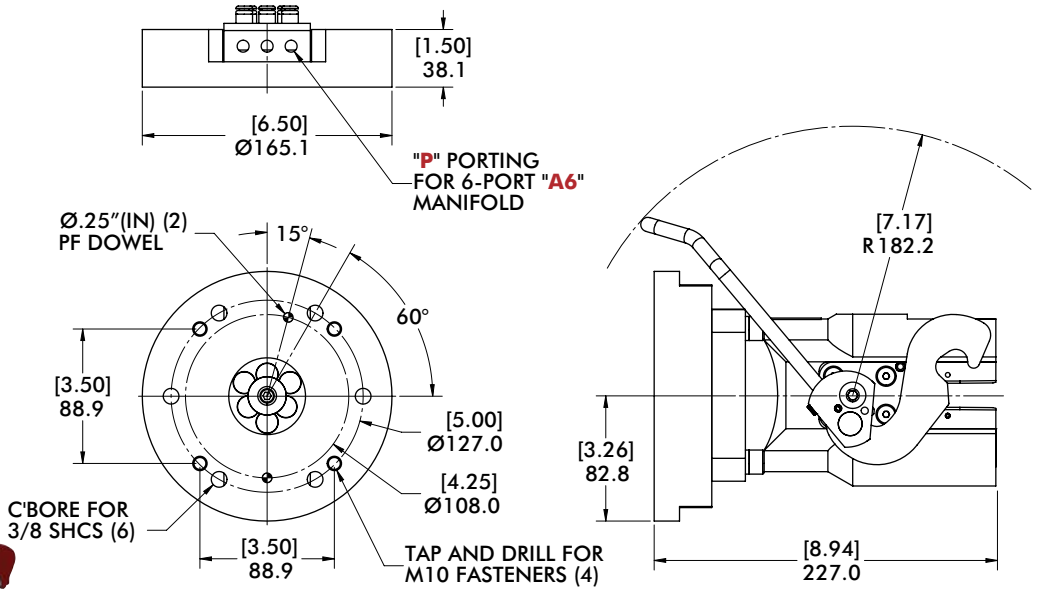

MODEL NUMBER	PORTING	# OF PORTS	WEIGHT
CPI-EOAMC30-DM-RD25-A6	1/8 NPT	6 (3/3)	1.86 kg [4.11 lb]

Style 22 - **FA900-SSM** Direct Mount Adaptor (Ø125mm Bolt Circle)

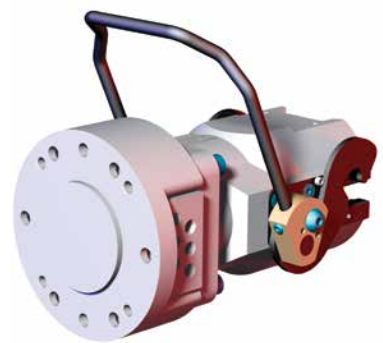

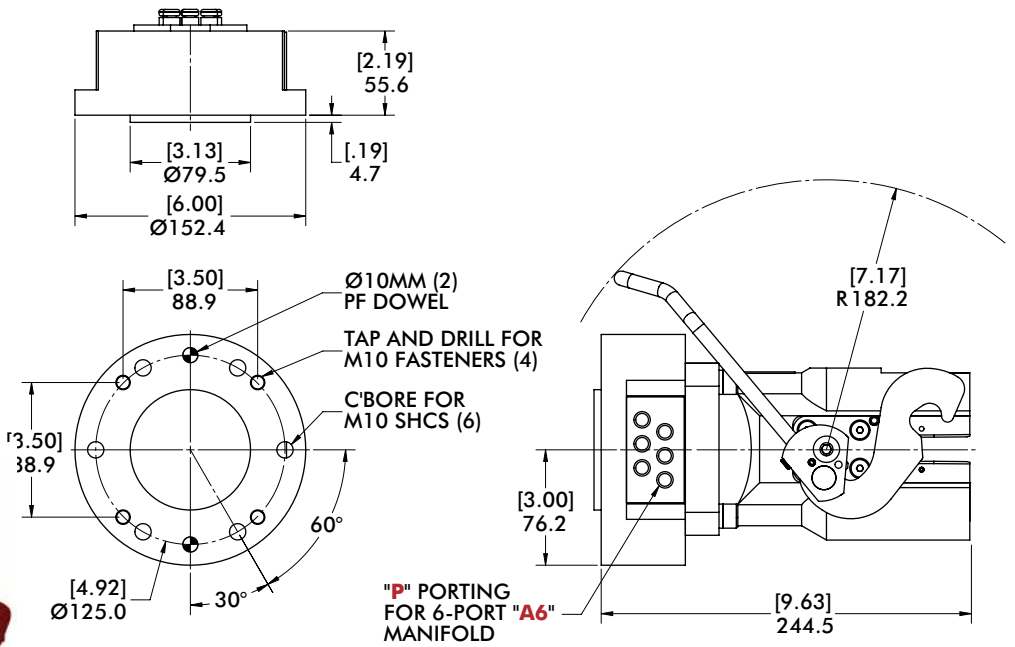

MODEL NUMBER	PORTING	# OF PORTS	WEIGHT
CPI-FA900-SSM-RD25-A6	3/8 NPT	6 (6/0)	2.27 kg [5.01 lb]

Style 23 - MD350 Direct Mount Adaptor - Ø187.3mm Bolt Circle

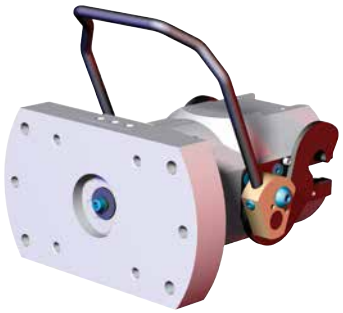

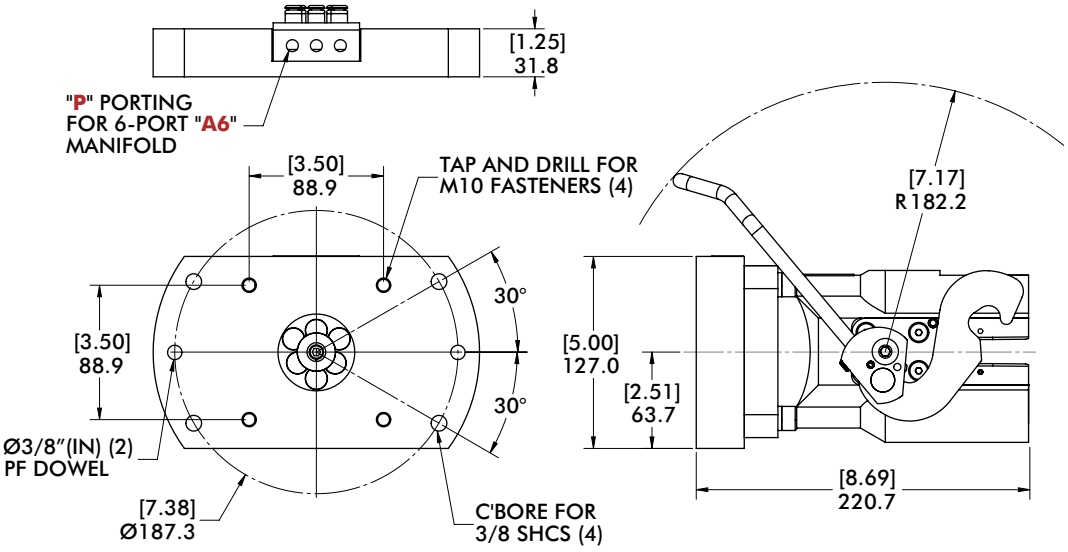

MODEL NUMBER	PORTING	# OF PORTS	WEIGHT
CPI-MD350-DM-RD25-A6	1/8 NPT	6 (3/3)	2.07 kg [4.56 lb]

Style 23 - MD350 90° Robot Adaptor

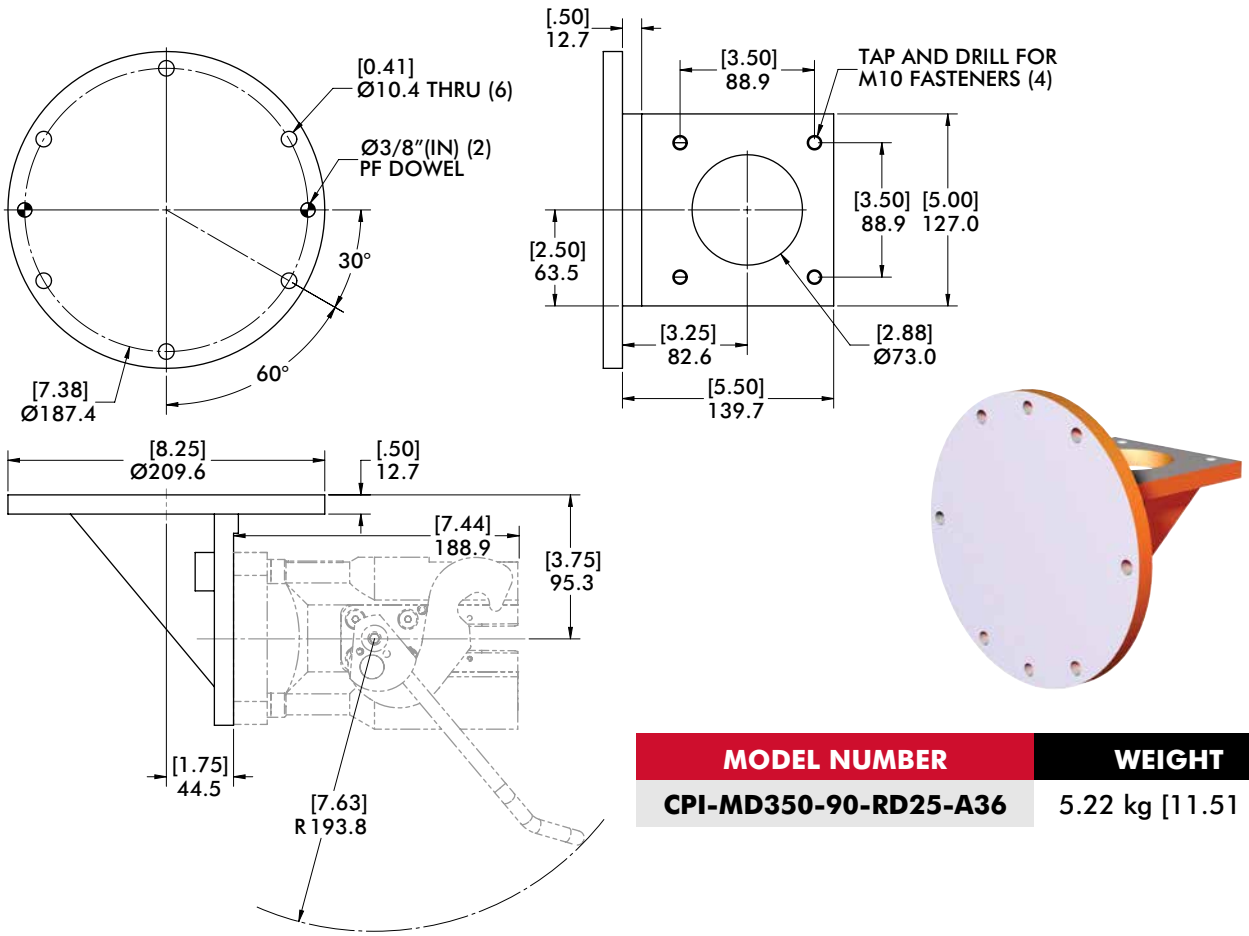

MODEL NUMBER	WEIGHT
CPI-MD350-90-RD25-A36	5.22 kg [11.51 lb]

SA000

Robot Automation Adaptors | Dimensions

Style 24 - **SA000** Direct Mount Adaptor - Ø69.5mm Bolt Circle

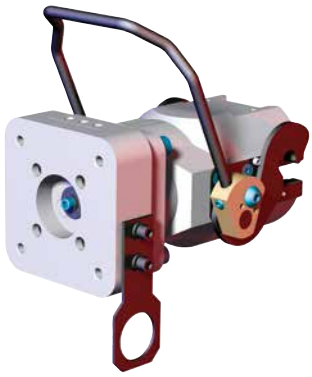

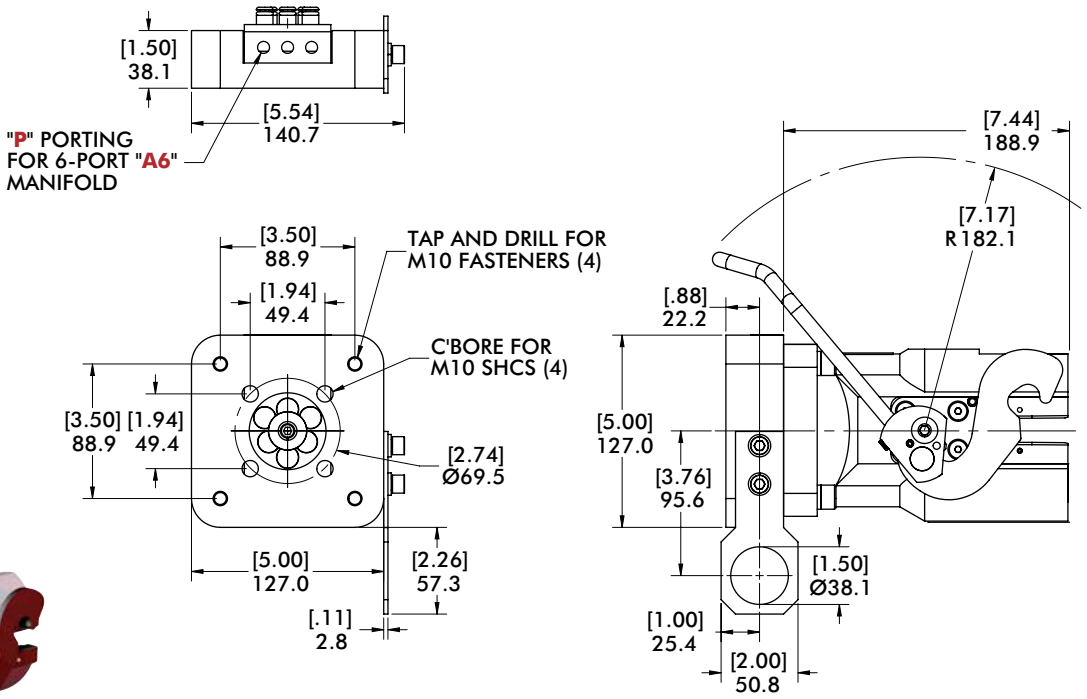

MODEL NUMBER	PORTING	# OF PORTS	WEIGHT
CPI-SA000-DM-RD25-A6	1/8 NPT	6 (3/3)	1.57 kg [3.47 lb]

CM975XL Direct Mount Adaptor - Ø76mm Bolt Circle



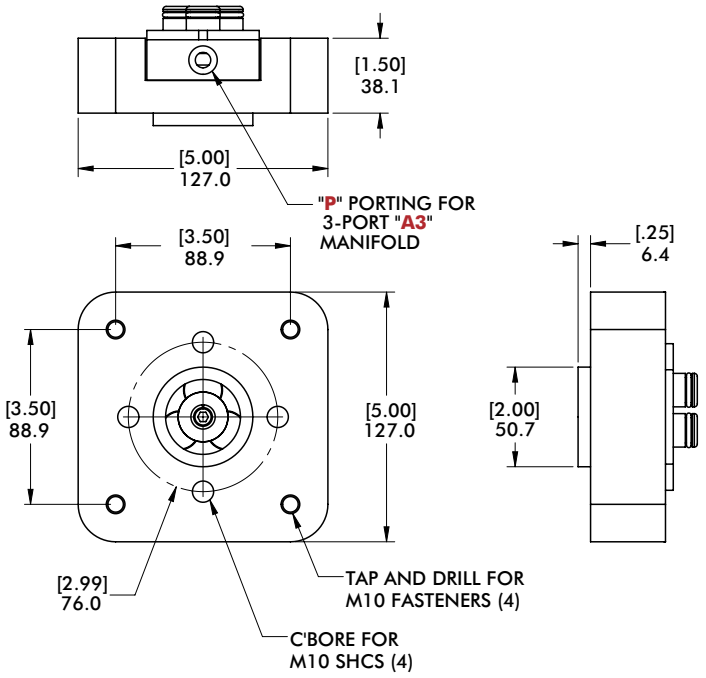

MODEL NUMBER	PORTING	# OF PORTS	WEIGHT
CPI-CM675XL-DM-RD25-A3	3/8 NPT	3 (2/1)	1.47 kg [3.24 lb]

CHM32 Direct Mount Adaptor - Ø125mm Bolt Circle

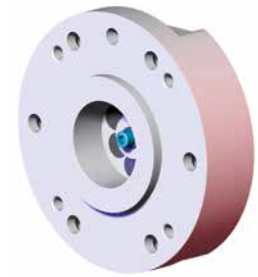

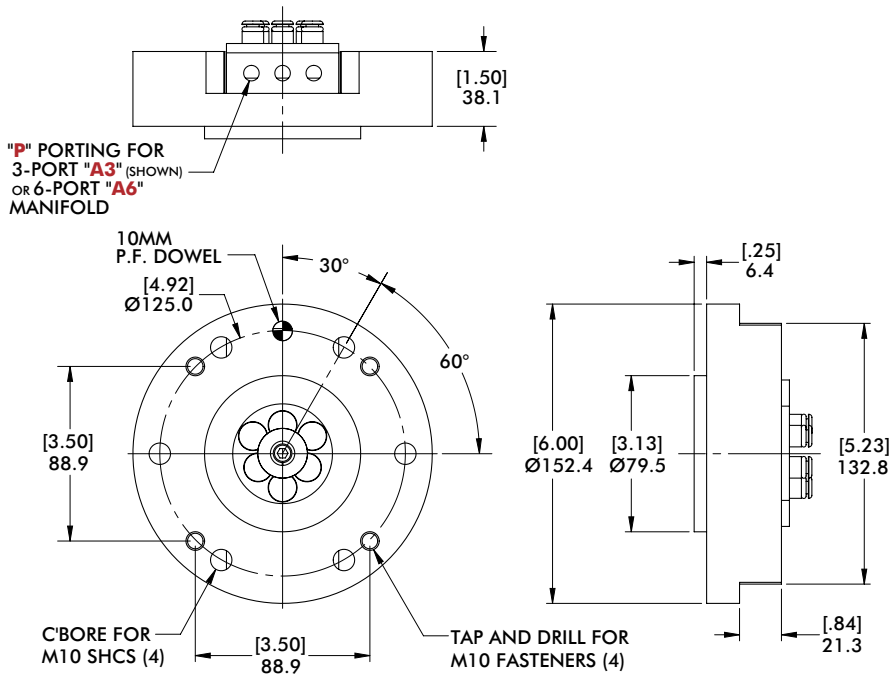

MODEL NUMBER	PORTING	# OF PORTS	WEIGHT
CPI-CHM32-DM-RD25-A3	3/8 NPT	3 (2/1)	2.38 kg [5.25 lb]
CPI-CHM32-DM-RD25-A6	1/8 NPT	6 (3/3)	2.42 kg [5.34 lb]

FA710, FA710IC

Robot Automation Adaptors | Dimensions

FA710IC 90° Robot Adaptor - Ø100mm Bolt Circle

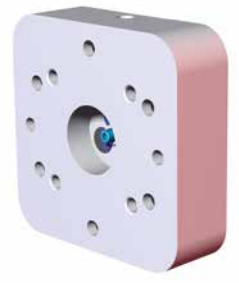

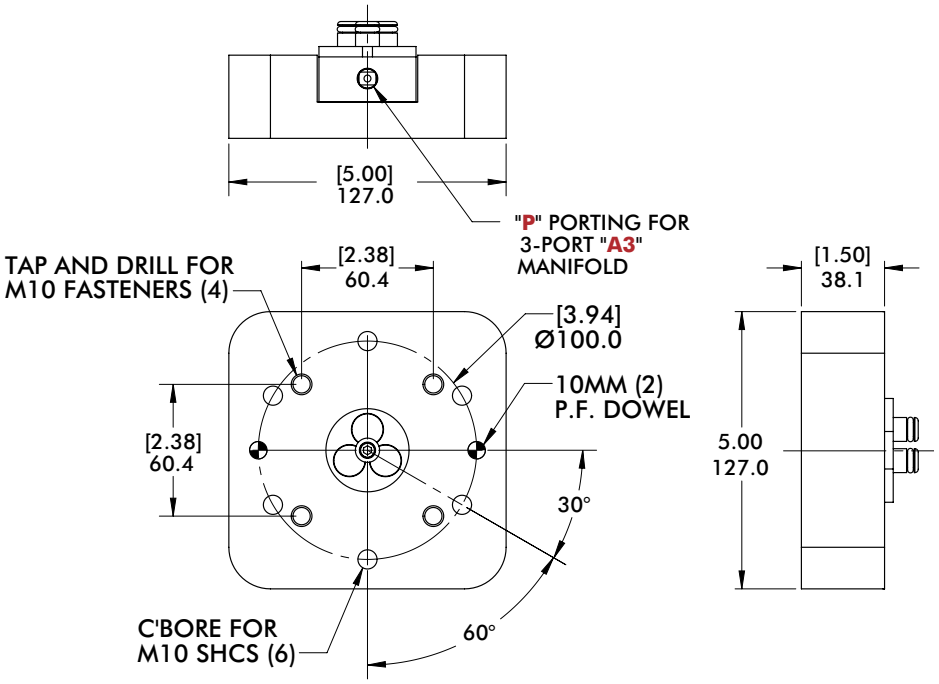

MODEL NUMBER	PORTING	# OF PORTS	WEIGHT
CPI-FA710-DM-TT15-A3	3/8 NPT	3 (2/1)	1.45 kg [3.19 lb]

FA710IC 90° Robot Adaptor - Ø100mm Bolt Circle

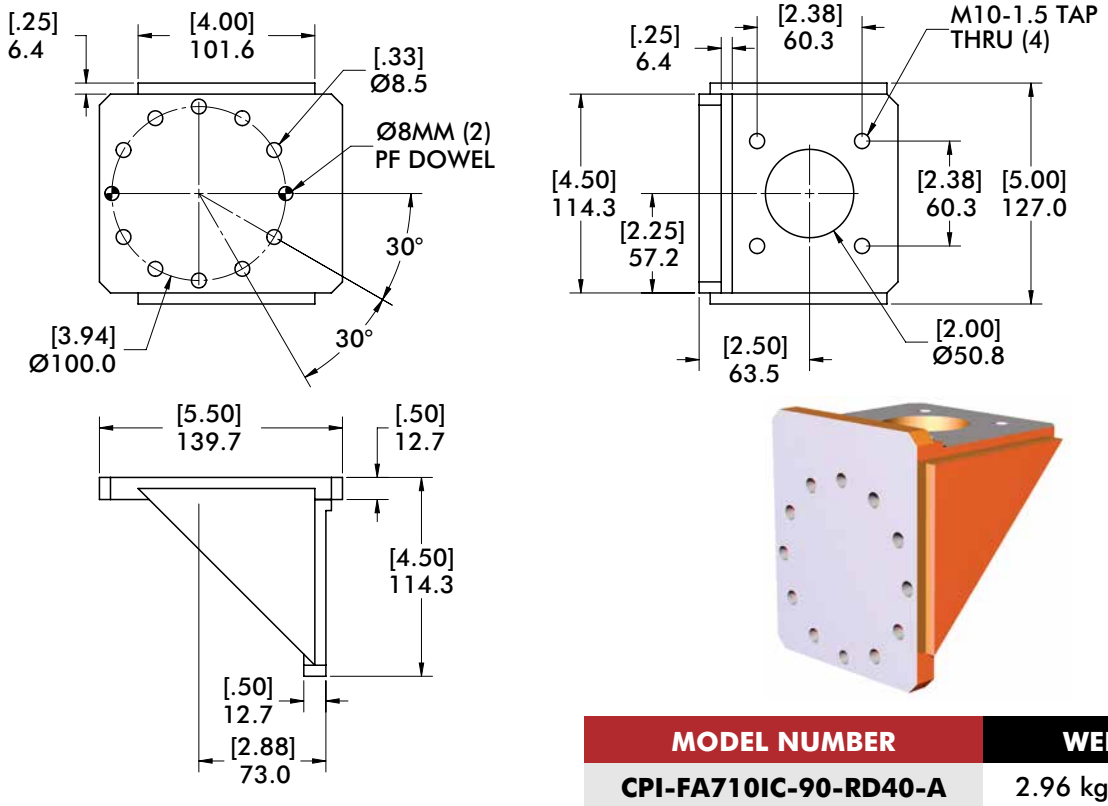

MODEL NUMBER	WEIGHT
CPI-FA710IC-90-RD40-A	2.96 kg [6.52 lb]

Dimensions and technical information are subject to change without notice

TDA-150F Direct Mount Adaptor Plate - Ø85mm Bolt Circle

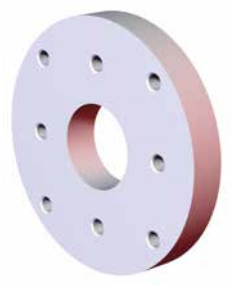

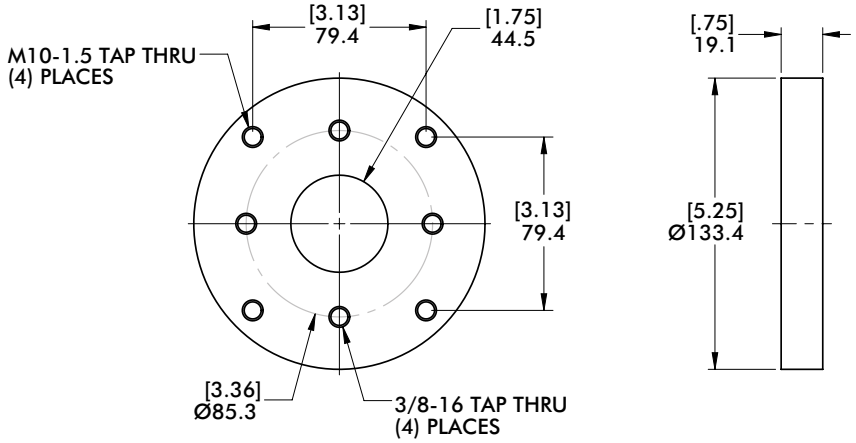

MODEL NUMBER	WEIGHT
CPI-TDA-150F-312F	.62 kg [1.36 lb]

TDA-250F Direct Mount Adaptor Plate - Ø125mm Bolt Circle

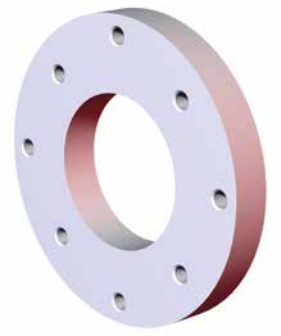

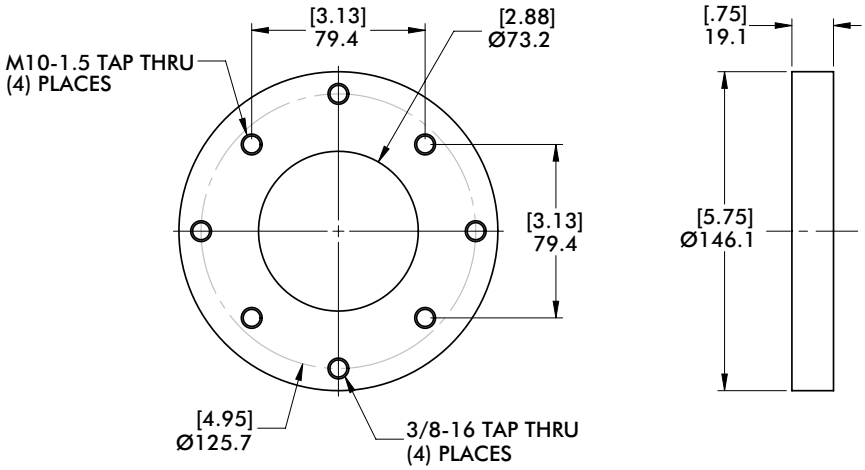

MODEL NUMBER	WEIGHT
CPI-TDA-250F-312F	.63 kg [1.38 lb]

FA900, KW150

Robot Automation Adaptors | Dimensions

FA900 Direct Mount Adaptor Plate - Ø125mm Bolt Circle

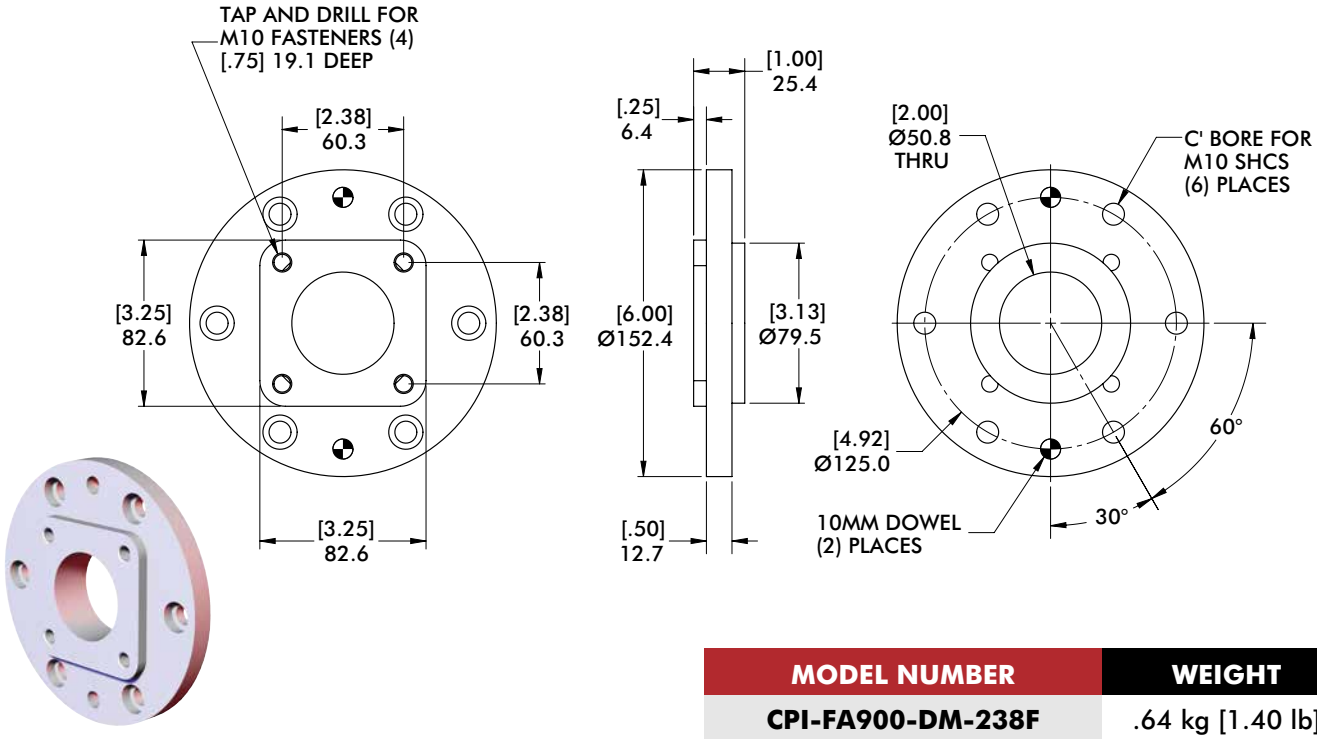

MODEL NUMBER	WEIGHT
CPI-FA900-DM-238F	.64 kg [1.40 lb]

KW150 Direct Mount Adaptor Plate - Ø92mm Bolt Circle

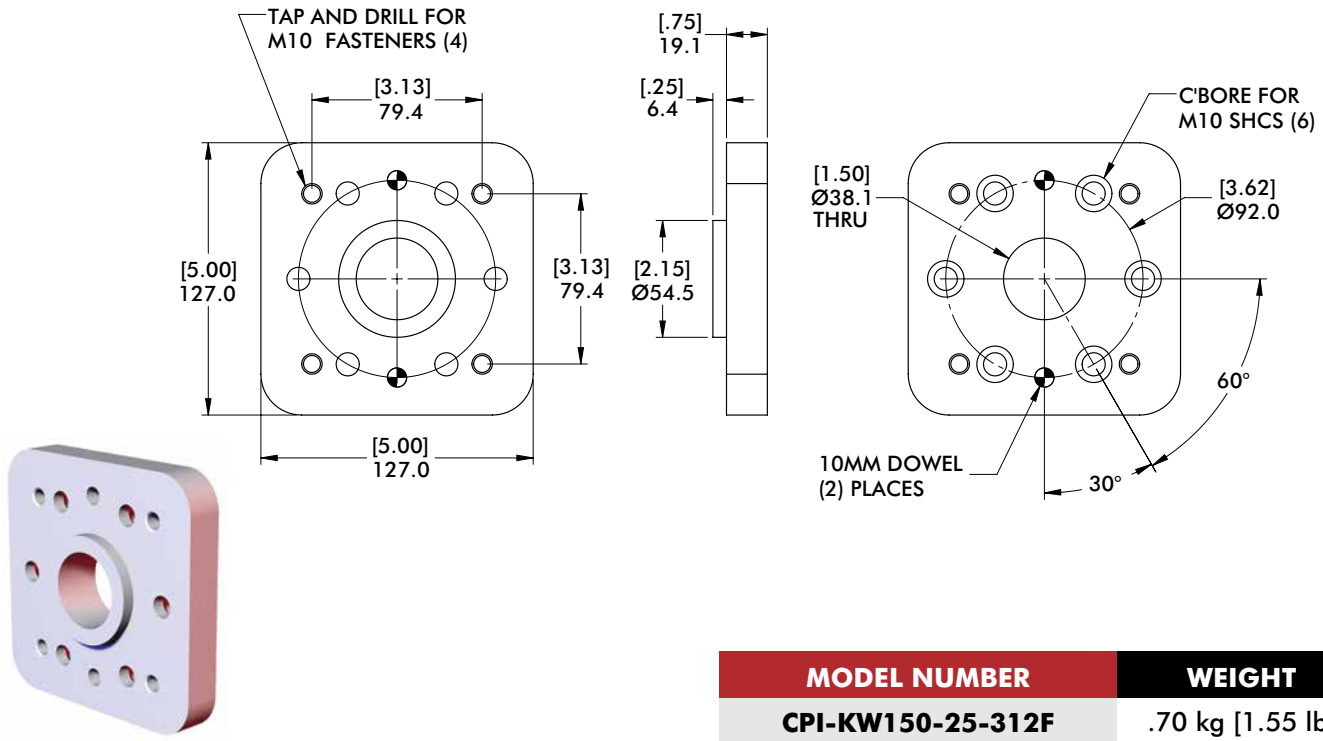

MODEL NUMBER	WEIGHT
CPI-KW150-25-312F	.70 kg [1.55 lb]

Dimensions and technical information are subject to change without notice

90° Degree Robot Adaptor to 40mm Disk

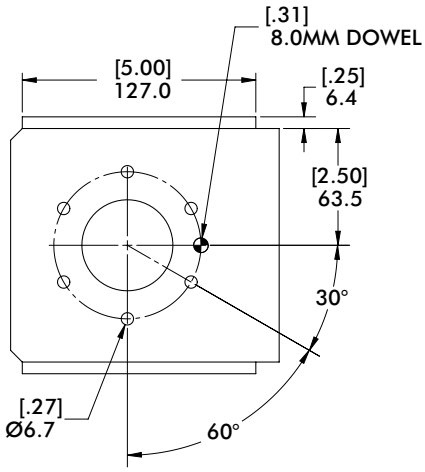

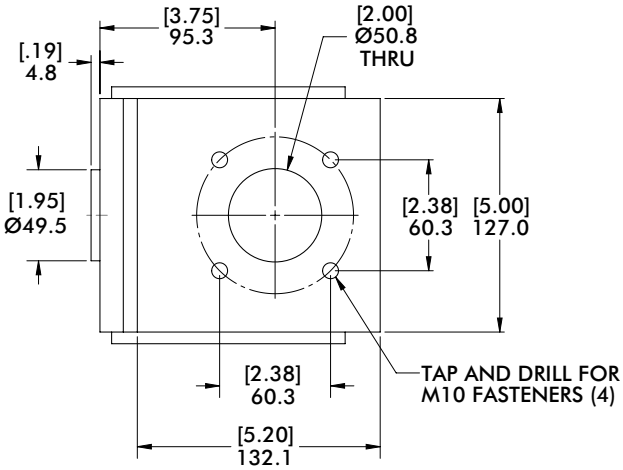

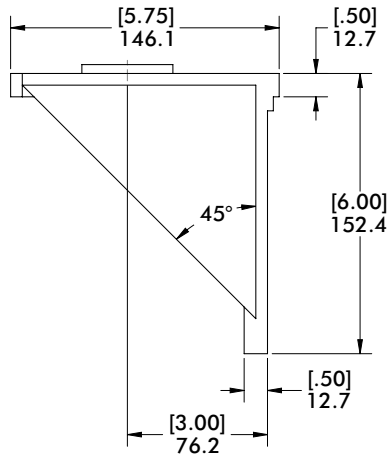

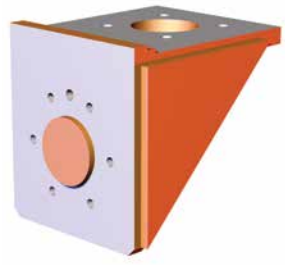

MODEL NUMBER	WEIGHT
CPI-KWFS45N-90-TTN40-A3	4.24 kg [9.34 lb]

CL-LAN

Robot Automation Adaptors | Dimensions

Ø125mm Bolt Circle

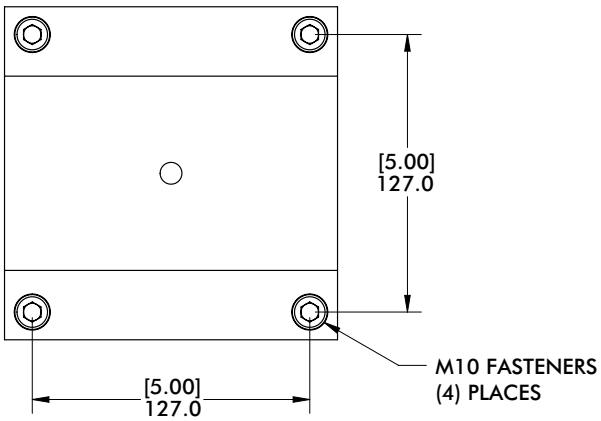



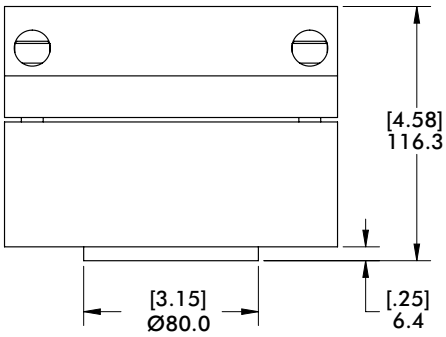

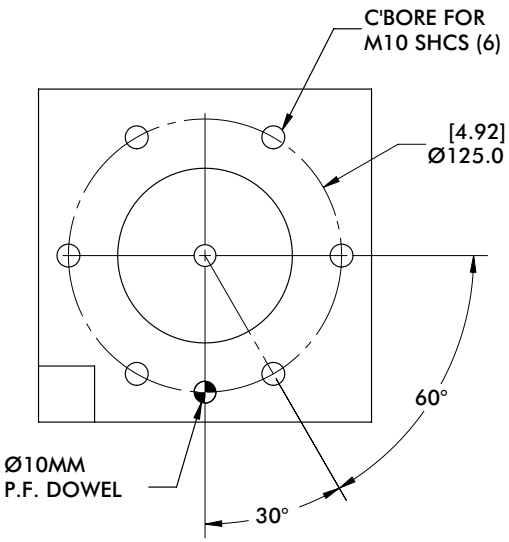

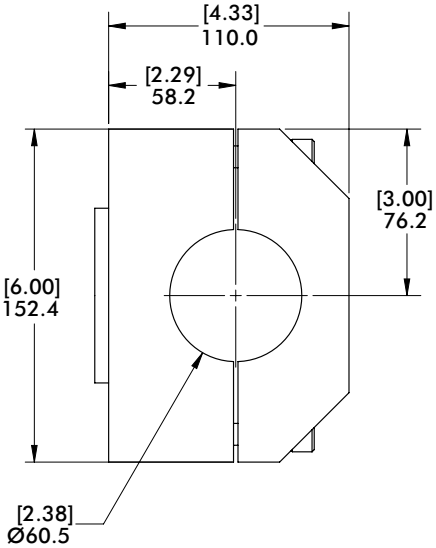

MODEL NUMBER	WEIGHT
CPI-CL-LAN-EOL	5.25 kg [11.58 lb]

Dimensions and technical information are subject to change without notice

90° Medium Duty - Ø125mm Bolt Circle

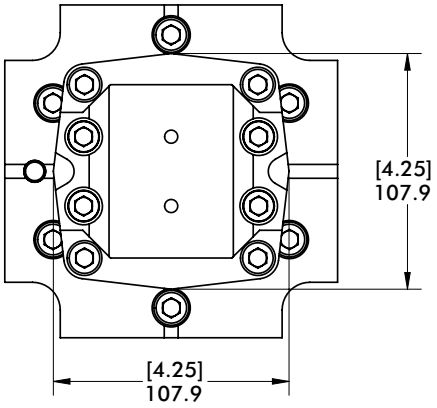

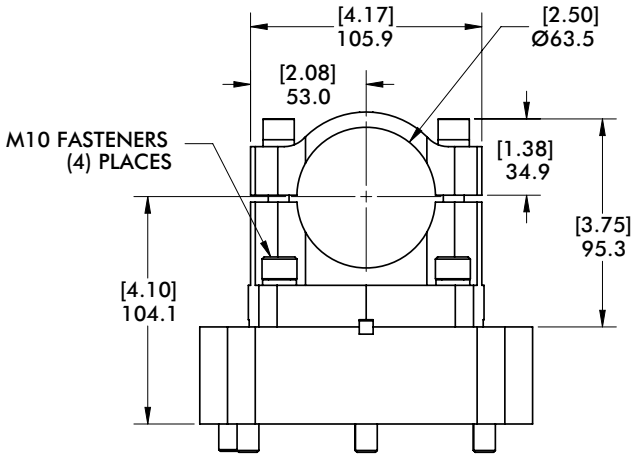

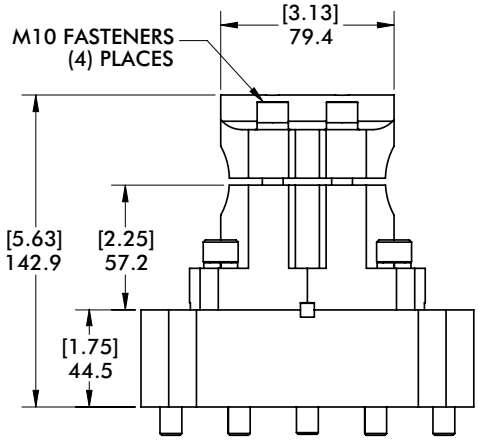

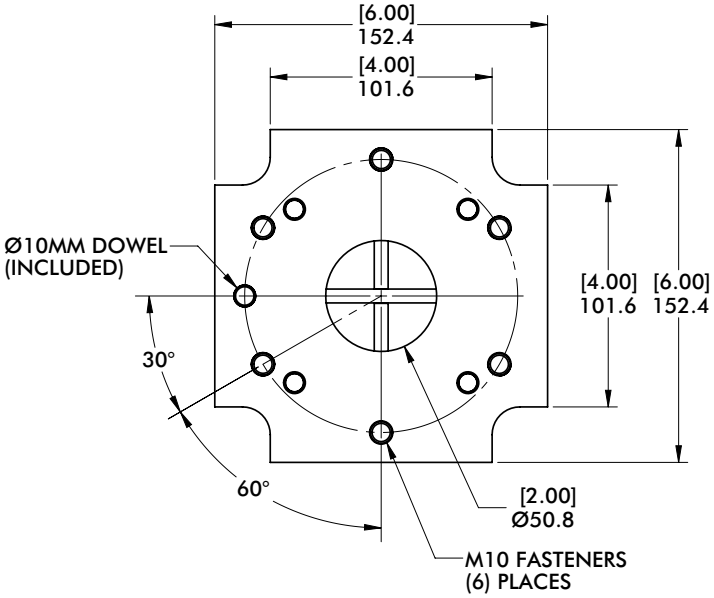

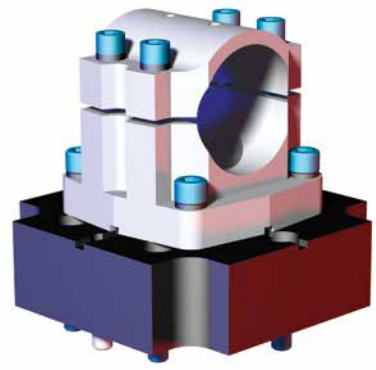

MODEL NUMBER	WEIGHT
CPI-ATI-151-90-WT	3.64 kg [8.03 lb]

ATI-90

Robot Automation Adaptors | Dimensions

Light Duty - Ø125mm Bolt Circle

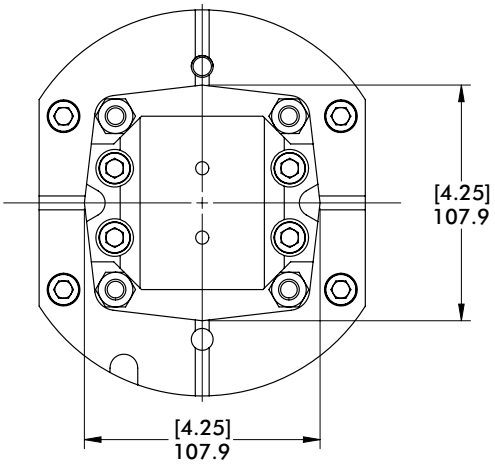

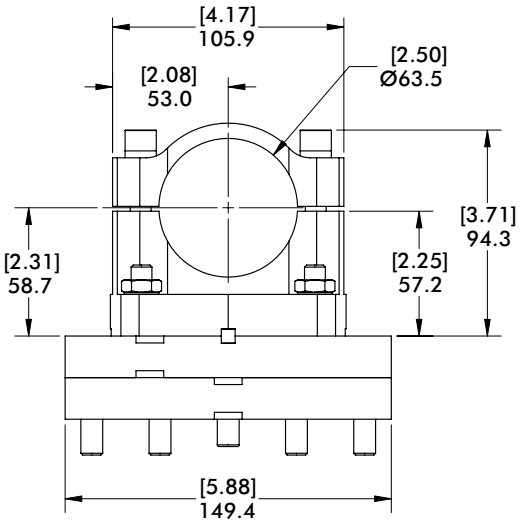

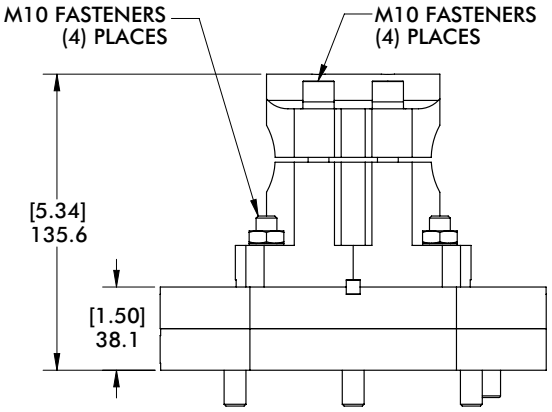

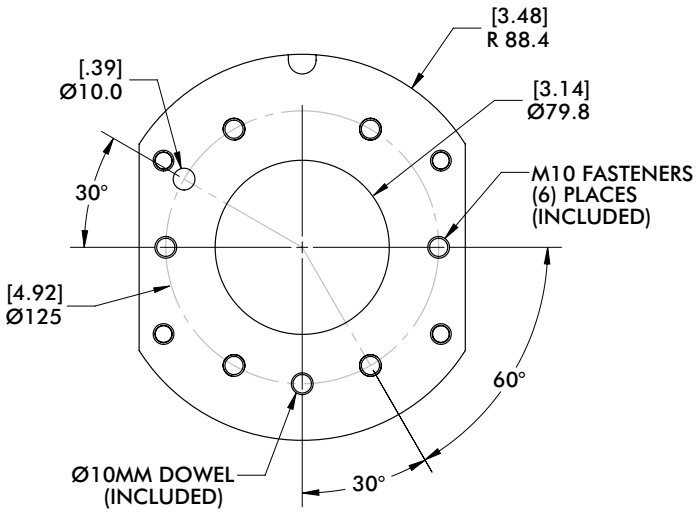

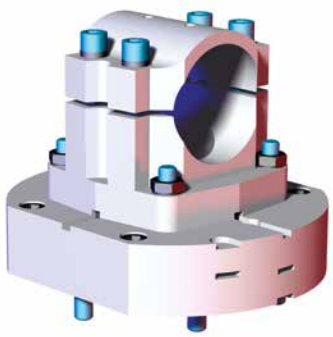

MODEL NUMBER	WEIGHT
CPI-ATI-90	3.55 kg [7.82 lb]

Dimensions and technical information are subject to change without notice

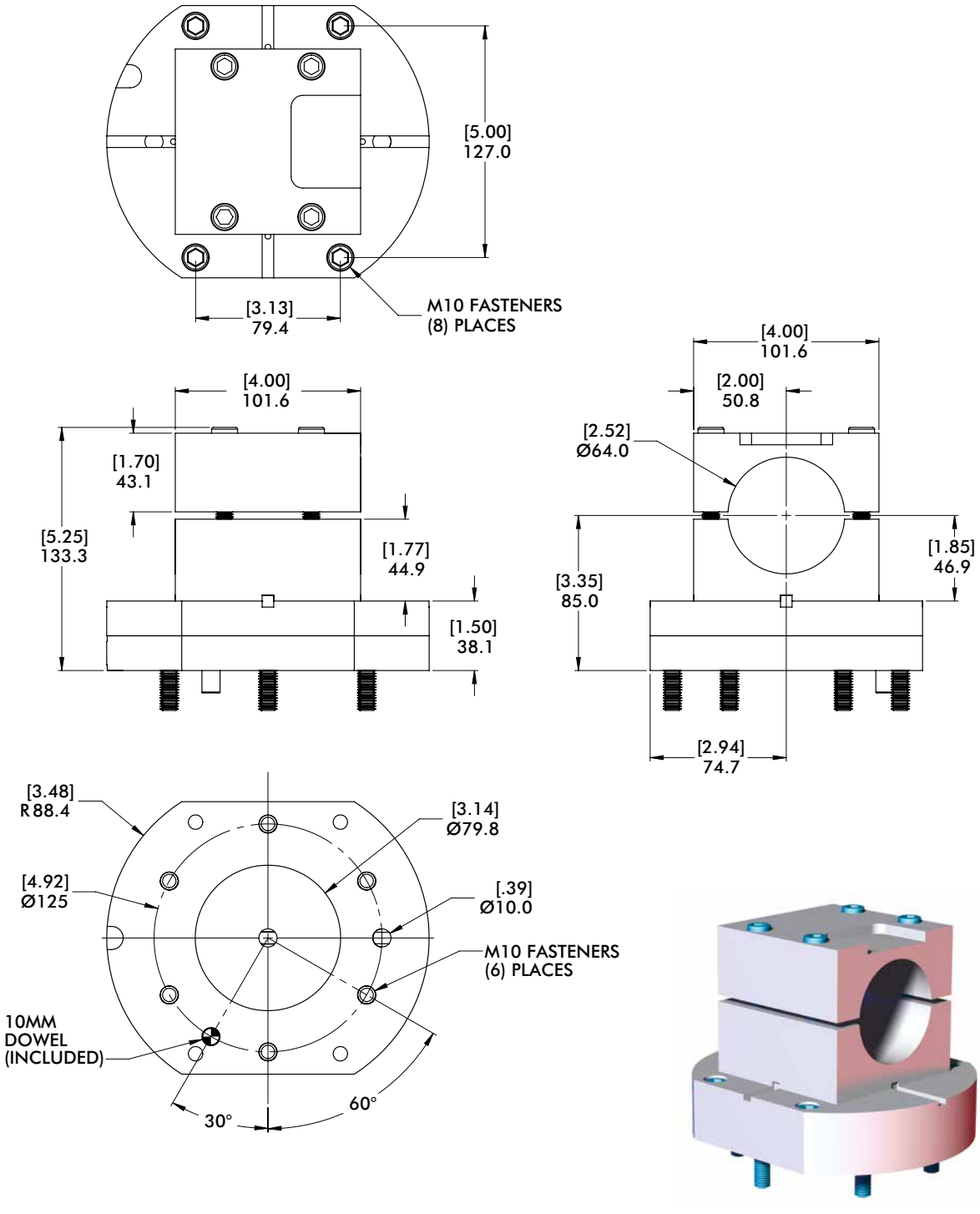

MODEL NUMBER	WEIGHT
CPI-ATI-90-SP	3.64 kg [8.03 lb]

ATI-201-60

Robot Automation Adaptors | Dimensions

Ø125mm Bolt Circle

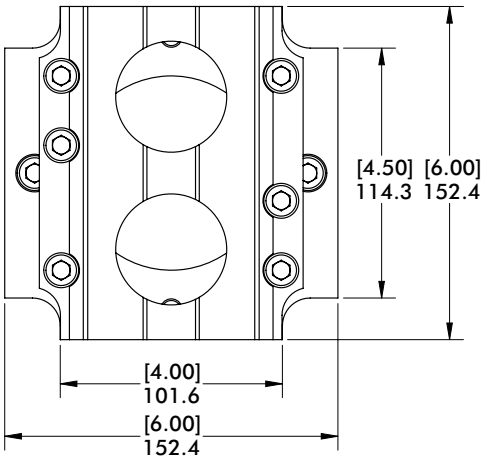

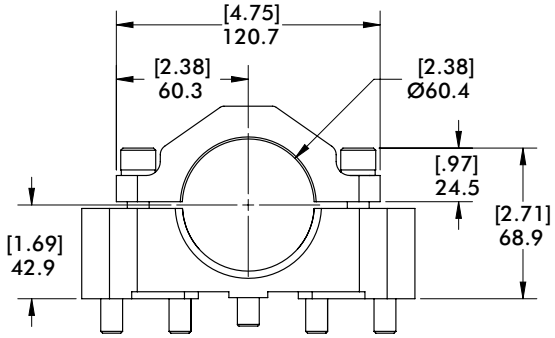

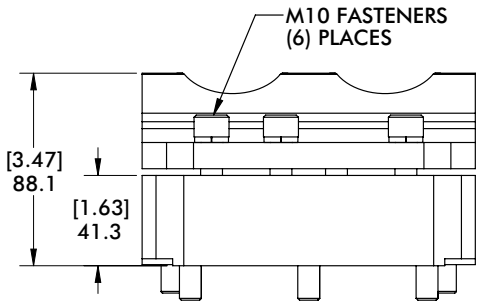

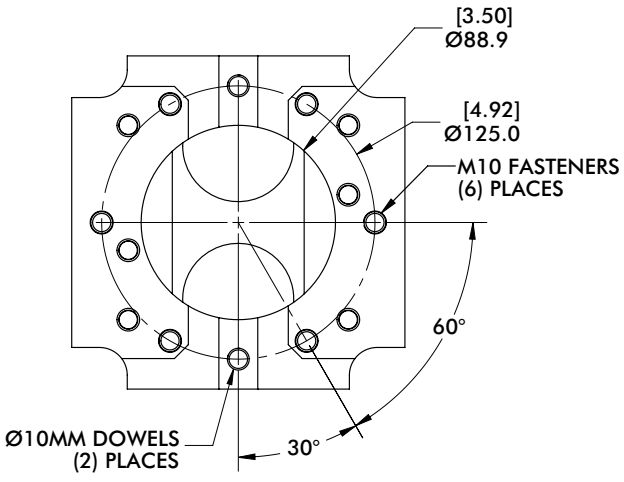

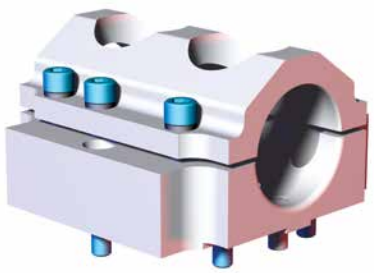

MODEL NUMBER	WEIGHT
CPI-ATI-201-60	2.29 kg [5.06 lb]

Dimensions and technical information are subject to change without notice

ATI-201-XXX-90

Robot Automation Adaptors | Dimensions

Ø125mm Bolt Circle Dowels

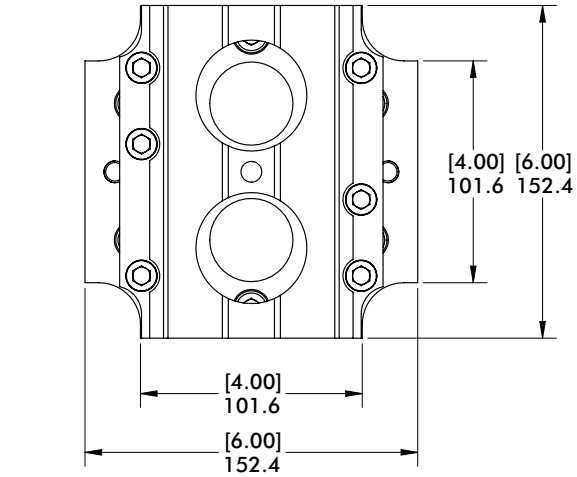

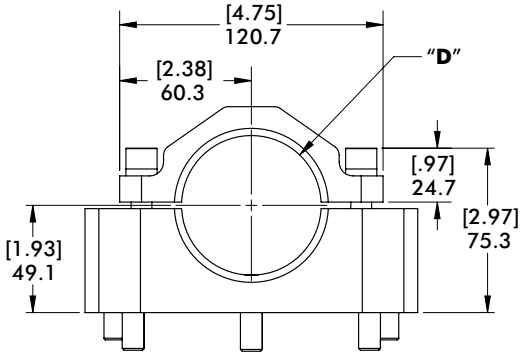

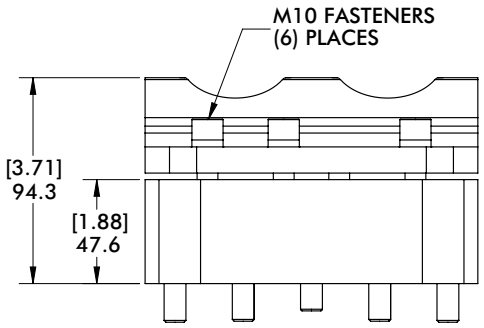

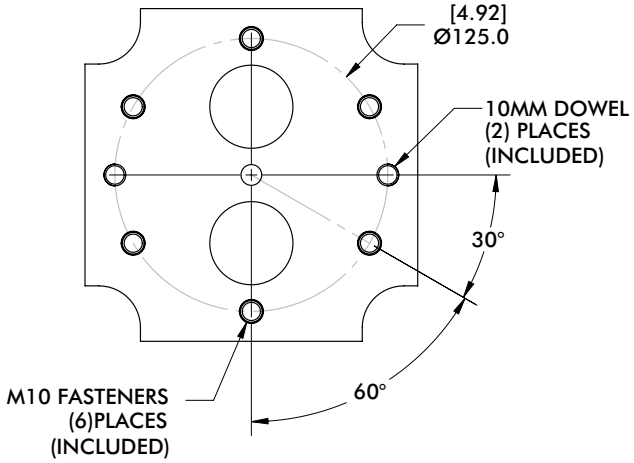

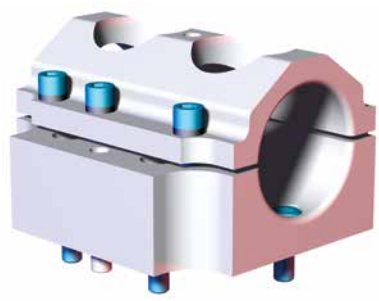

MODEL NUMBER	(Ø) "D"	(Ø) ACTUAL	WEIGHT
CPI-ATI-201-60-90	**60mm**	$60.45^{\pm.08}$ [$2.380^{\pm.003}$]	1.27 kg [2.80 lb]
CPI-ATI-201-250-90	**2.50"**(in)	$63.96^{\pm.08}$ [$2.518^{\pm.003}$]	1.27 kg [2.80 lb]

ATI-201-90-HD

Robot Automation Adaptors | Dimensions

Ø125mm Bolt Circle

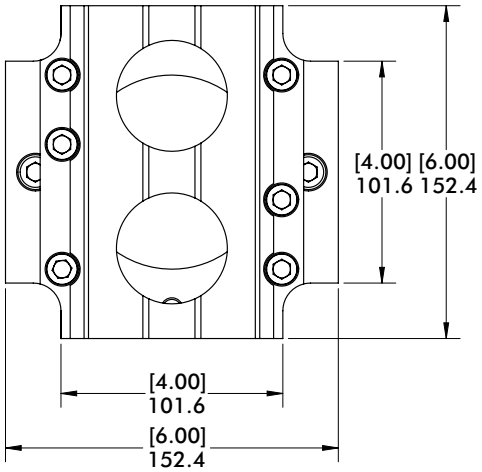

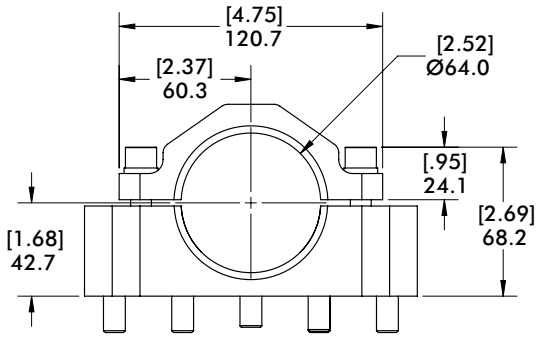

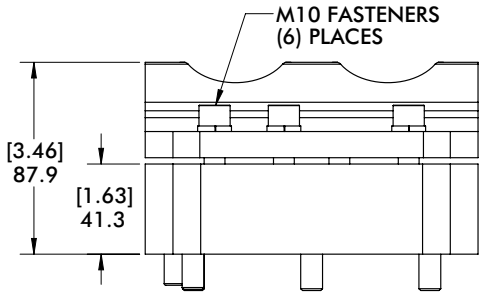

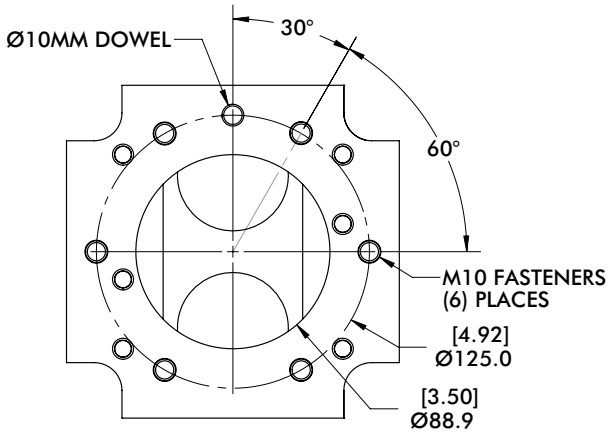

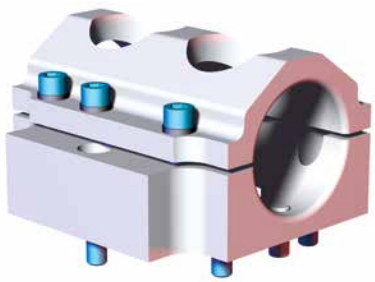

MODEL NUMBER	WEIGHT
CPI-ATI-201-90-HD	2.17 kg [4.77 lb]

Dimensions and technical information are subject to change without notice

ATI-150-90-3HD

Robot Automation Adaptors | Dimensions

Ø125mm Bolt Circle

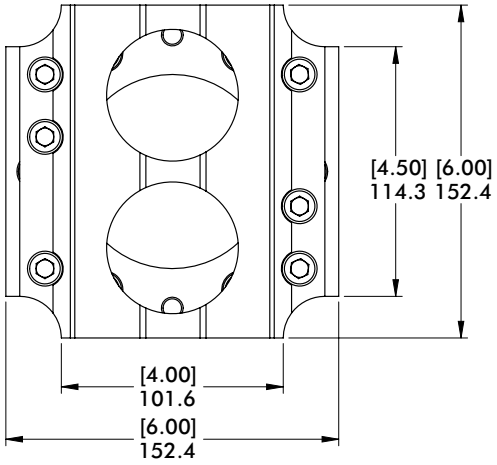

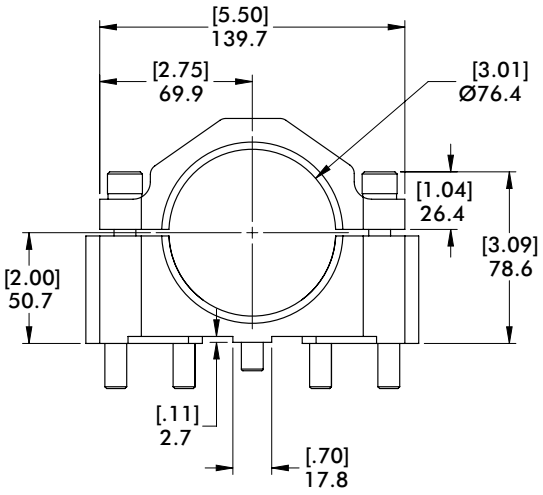

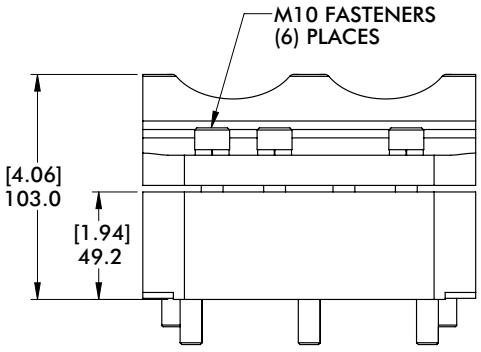

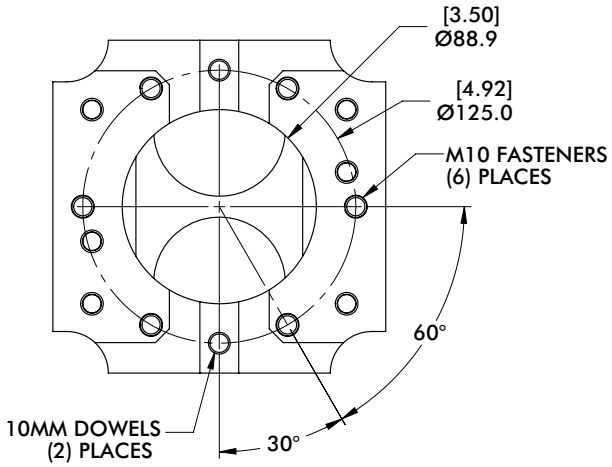

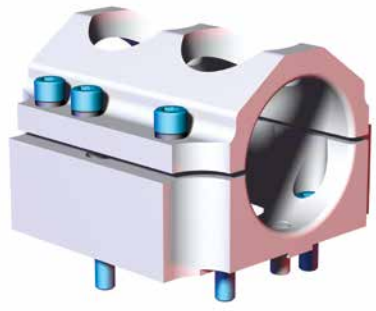

MODEL NUMBER	WEIGHT
CPI-ATI-201-90-3HD	2.50 kg [5.52 lb]

ATI

Robot Automation Adaptors | Dimensions

90° World Tool Assembly - Ø125mm Bolt Circle

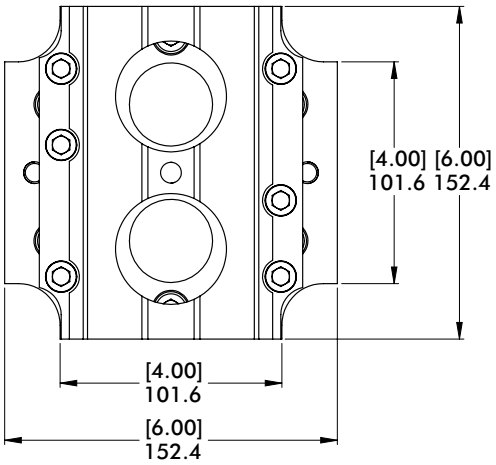

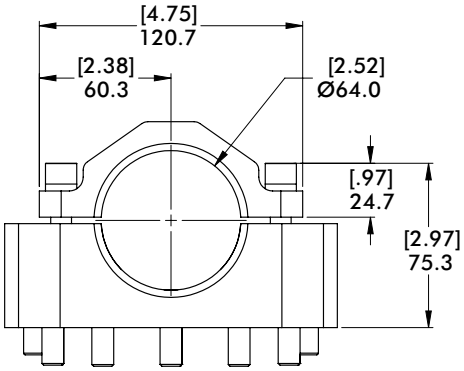

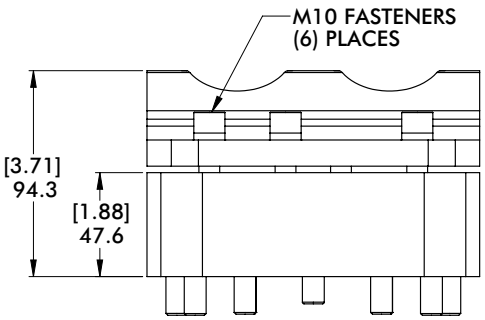

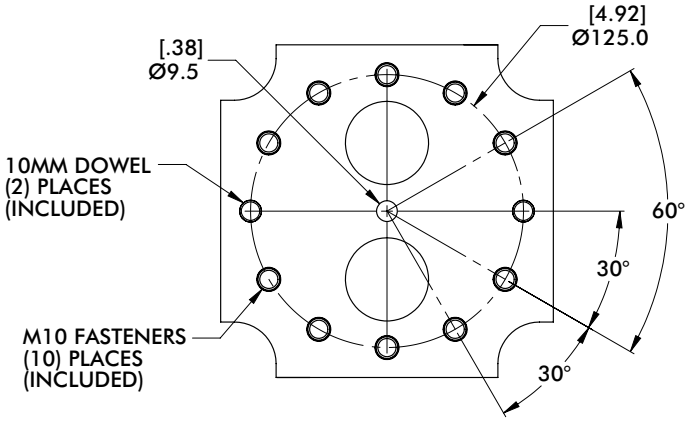

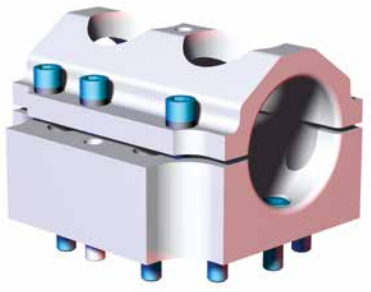

MODEL NUMBER	WEIGHT
CPI-ATI-201-250-90-10S	2.17 kg [4.77 lb]

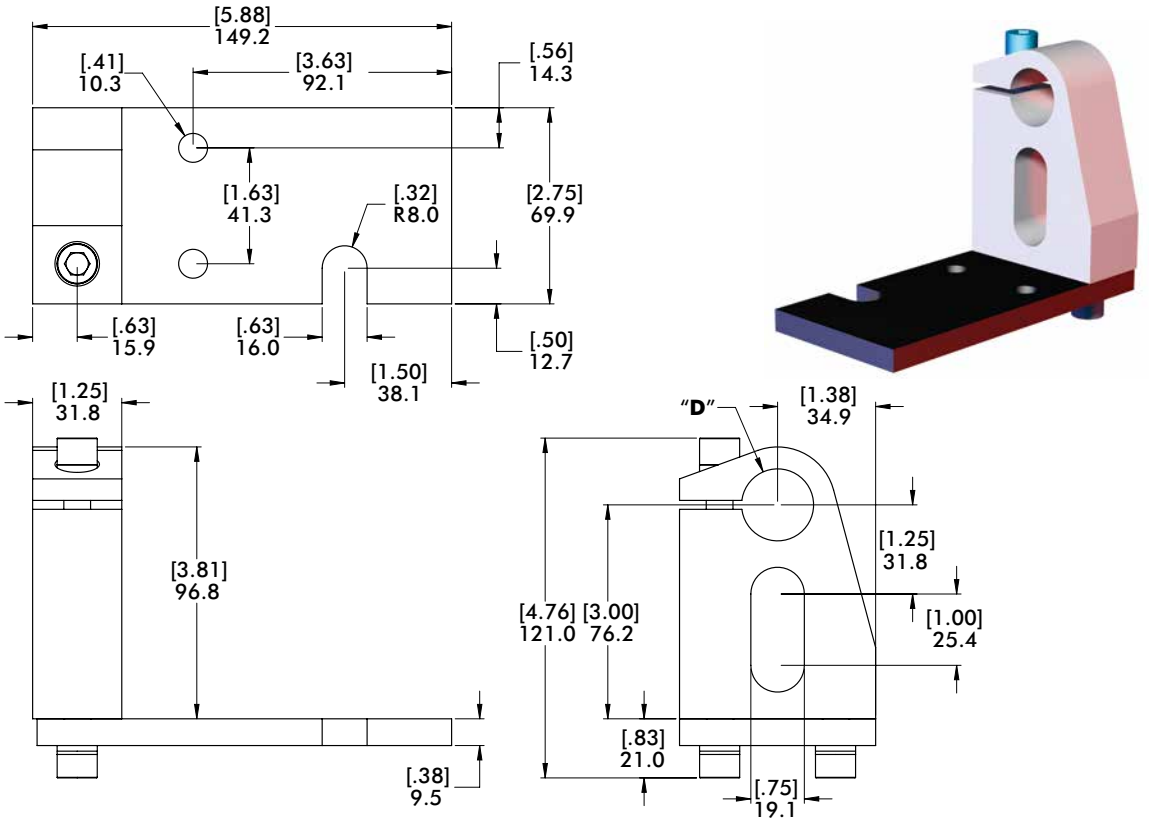

MODEL NUMBER	(Ø) "D"	(Ø) ACTUAL	WEIGHT
CPI-NAV-25-CM	25mm	25.25$^{\pm.08}$ [0.994$^{\pm.003}$]	[2.60 lb] 1.18 kg
CPI-NAV-100-CM	1.00"(in)	25.65$^{\pm.08}$ [1.010$^{\pm.003}$]	



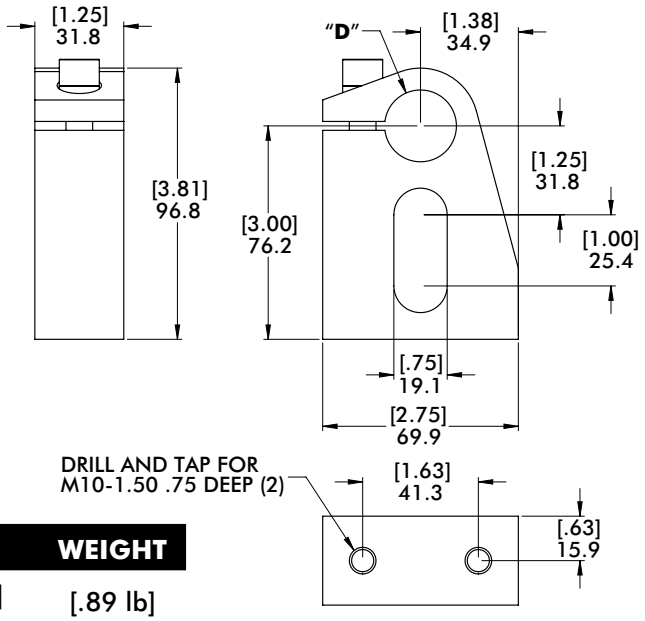

MODEL NUMBER	(Ø) "D"	(Ø) ACTUAL	WEIGHT
CPI-NAV-25-BL	25mm	25.25$^{\pm.08}$ [0.994$^{\pm.003}$]	[.89 lb] .40 kg
CPI-NAV-100-BL	1.00"(in)	25.65$^{\pm.08}$ [1.010$^{\pm.003}$]	

ACCELERATE® TOOLING COLLECTION

Table of Contents


World Tool Composite Boom 3


Split Saddle Tooling 9


Blankload Crossbar Tooling 10


Tool Booms 12


Crossbar Saddles 13


Flange Mount 15


T-Clamps 15


Ball Clamps 17


Wrist Clamp 18


Cross Clamps 19


Parallel Clamps 21


Apple Core Mounts 22

Dimensions and technical information are subject to change without notice

ACCELERATE® TOOLING COLLECTION

Table of Contents


Ball Extensions 22


Tri-Axis Adaptor Mounts..... 24


Transfer Press Adaptors 25


Transfer Press Bayonets 28


One-Touch Finger Tools 28


Double T-Clamp..... 29


Lower Tooling..... 30


Lower Nest Tooling..... 31


Gripper Mounts..... 33


Gripper Sensor Mounts..... 35


Shovels 36


Proximity Switch Mounts 37

WORLD TOOL COMPOSITE BOOM - WTCB SERIES

Accelerate® Tooling Collection | Ordering Information

WTCB - **TC01** - **90T** - **1700** - **4R2T**

Robot, Tool Changer or Adapter Plate Mounting

TC01	125mm BCD for RTP-800, RTP-1200, ATI-QC-160, ATI-QC-210 or Kawasaki ZT130
TC02	Adapter Plate for 11-59D 323327 VKR 125-210 & 11-59D 323330 F.EE Manual Tool Changer
TC03	125mm BCD Rotated 90° for RTP-800, RTP-1200, ATI-QC-160, ATI-QC-210 or Kawasaki ZT130
TC04	125mm BCD with Pilot for ISO 9409-1-A125 ABB IRB 6400 or Kawasaki ZT130 L
TC05	160mm BCD with Pilot for ABB IRB 6650 & IRB 6650S

See page 7 for more information.

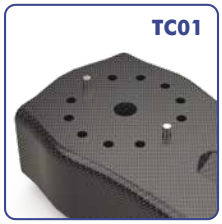

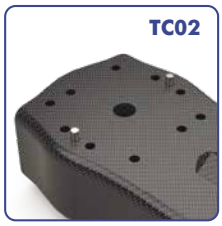

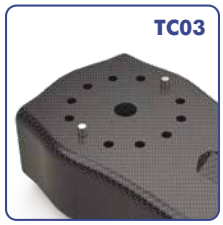

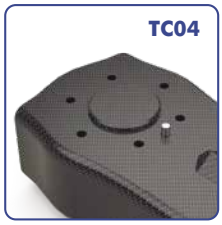

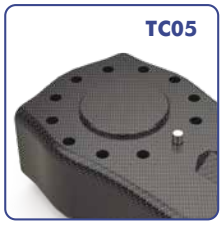

Dowels pins shown for location. Not included.

Mounting Orientation

90C	Center Mount
90T	End Mount



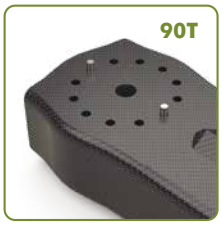

Boom Length

End Mount Configurations

1094	1000mm Length*
1500	1700mm Length
1703	2400mm Length

*2R2T Tool Branch only.

Center Mount Configurations

1000	1000mm Length
1700	1700mm Length
2400	2400mm Length

Tool Branches

2R2T	2 Tool Branch Mounting Locations (End Mount Configurations only)
4R2T	4 Tool Branch Mounting Locations*

*excludes **1094** Boom Length.



End Mount
shown with RTP-1200
Tool Plate and 2X RDN-40
Manual Tool Changers
(order separately)

Center Mount
shown with RTP-1200
Tool Plate and 4X RDN-40
Manual Tool Changers
(order separately)

Dimensions and technical information are subject to change without notice

WORLD TOOL COMPOSITE BOOM - WTCB SERIES

Accelerate® Tooling Collection | Dimensions and Specifications

Center Mount with 4 Branches



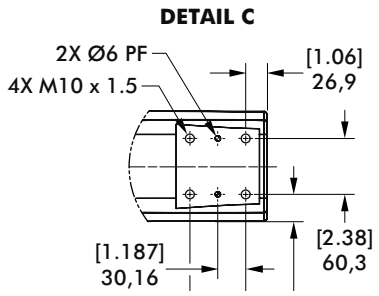

Model No.	Length mm [in]	Weight* kg [lbs]
WTCB-TCXX-90C-1000-4R2T	1000 [39.37]	9,18 [20.24]
WTCB-TCXX-90C-1700-4R2T	1700 [66.93]	10,79 [23.79]
WTCB-TCXX-90C-2400-4R2T	2400 [94.49]	13,45 [29.65]

*Boom only.

Description	Designation	Units	1000mm	1700mm	2400mm
Mass (Composite Boom Only)	W	[lb] kg	[20.24] 9.18	[23.79] 10.79	[29.65] 13.45
Center of Mass Location X-Axis	d_x	[in] mm	0	0	0
Center of Mass Location Y-Axis	d_y		0	0	0
Center of Mass Location Z-Axis	d_z		[-1.96] -49.8	[1.96] -49.7	[1.94] -49.2
Moment of Inertia at Center of Gravity	L_{xx}	[lb-ft²] kg-m²	[0.95] 0.04	[1.04] 0.044	[12.58] 0.53
	L_{yy}		[14.43] 0.608	[42.93] 1.809	[93.59] 3.944
	L_{zz}		[14.78] 0.623	[43.28] 1.824	[94.00] 3.961

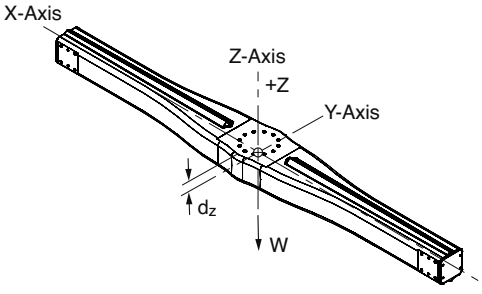

WORLD TOOL COMPOSITE BOOM - WTCB SERIES

Accelerate® Tooling Collection | Dimensions and Specifications

End Mount with 2 Branches



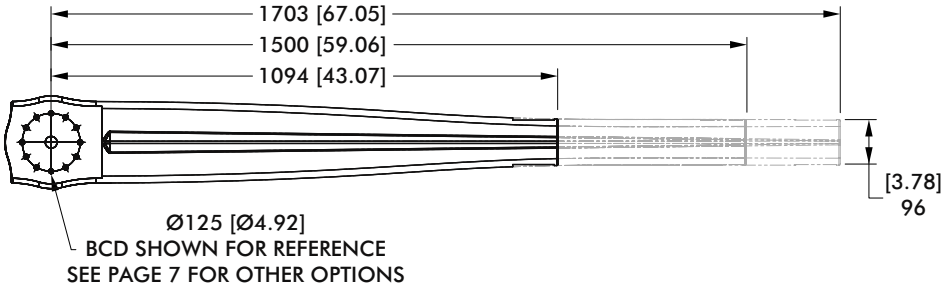

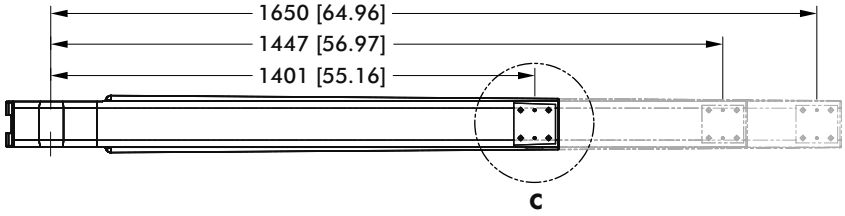

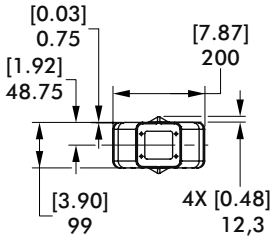

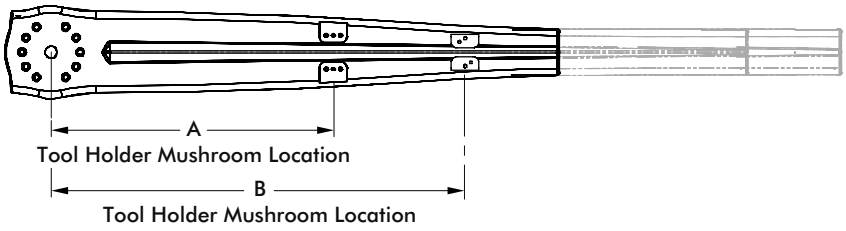

DETAIL C

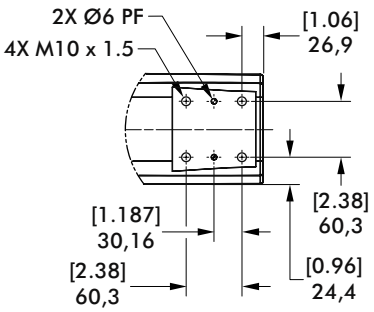

Model No.	A	B	Length mm [in]	Weight* kg [lbs]
WTCB-TCXX-90T-1094-2R2T	608 [23.94]	1041 [40.98]	1094 [43.07]	9,98 [22.0]
WTCB-TCXX-90T-1500-2R2T		1244 [48.98]	1500 [59.06]	11,22 [24.7]
WTCB-TCXX-90T-1703-2R2T	713 [28.07]	1447 [56.97]	1703 [67.05]	11,97 [26.4]

*Boom only.

Description		Designation	Units	1094mm	1500mm	1703mm
# of RDN Mount Locations				2	2	2
Mass (Boom Only)		W	[lb] kg	[22.00] 9.98	[24.74] 11.22	[26.39] 11.97
Center of Mass Location	X-Axis	d_x	[in] mm	[14.31] 363.6	[19.41] 486.2	[21.78] 553.3
	Y-Axis	d_y		0	0	0
	Z-Axis	d_z		[-0.0437] -1.111	[-0.0435] -1.104	[-0.0407] -1.033
Moment of Inertia at Center of Gravity		L_{xx}	[lb-ft²] kg-m²	[1.0204] 0.043	[1.1153] 0.047	[1.1628] 0.049
		L_{yy}		[29.9477] 1.262	[60.9158] 2.567	[82.9613] 3.496
		L_{zz}		[29.5918] 1.247	[60.5599] 2.552	[82.6054] 3.481

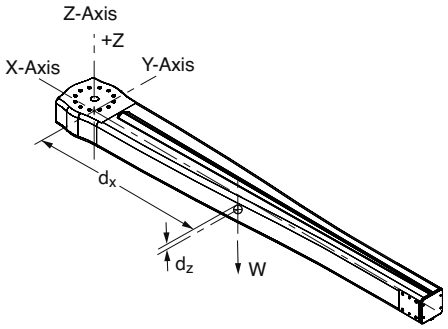

Dimensions and technical information are subject to change without notice

WORLD TOOL COMPOSITE BOOM - WTCB SERIES

Accelerate® Tooling Collection | Dimensions and Specifications

End Mount with 4 Branches



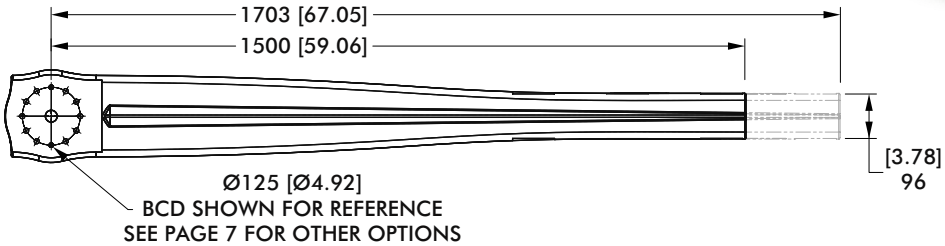

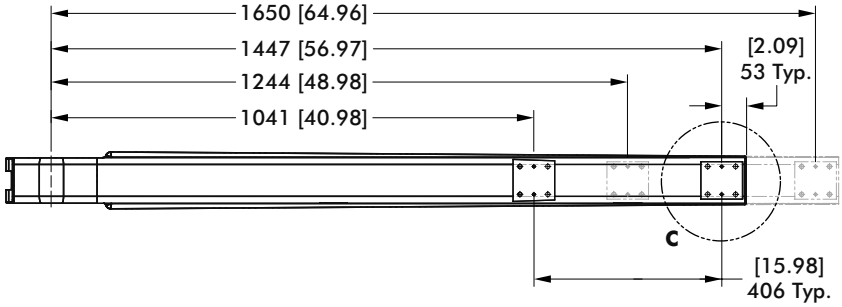

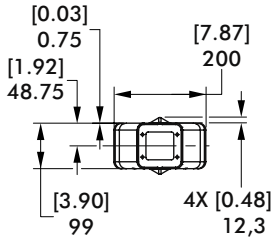

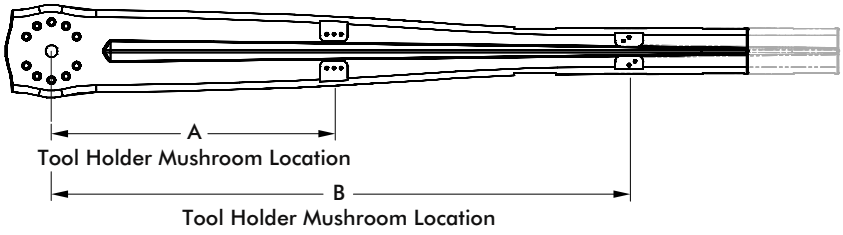

DETAIL C

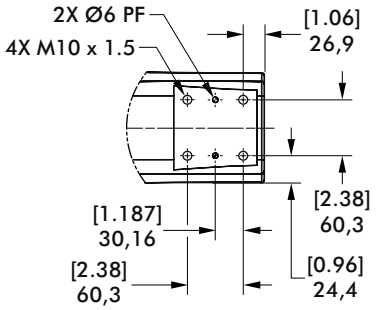

Model No.	A	B	Length mm [in]	Weight* kg [lbs]
WTCB-TCXX-90T-1500-4R2T	608 [23.94]	1244 [48.98]	1500 [59.06]	11,80 [26.0]
WTCB-TCXX-90T-1703-4R2T	713 [28.07]	1447 [56.97]	1703 [67.05]	12,32 [27.2]

*Boom only.

Description		Designation	Units	1500mm	1703mm
# of RDN Mount Locations				4	4
Mass (Boom Only)		W	[lb] kg	[26.01] 11.8	[27.16] 12.32
Center of Mass Location	X-Axis	d_x	[in] mm	[19.94] 506.4	[22.63] 574.9
	Y-Axis	d_y		0	0
	Z-Axis	d_z		[-0.0428] -1.087	[-0.0306 -0.777
Moment of Inertia at Center of Gravity		L_{xx}	[lb-ft²] kg-m²	[1.1391] 0.048	[1.1865] 0.05
		L_{yy}		[63.8821] 2.692	[87.1853] 3.674
		L_{zz}		[63.5262] 2.677	[86.8294] 3.659

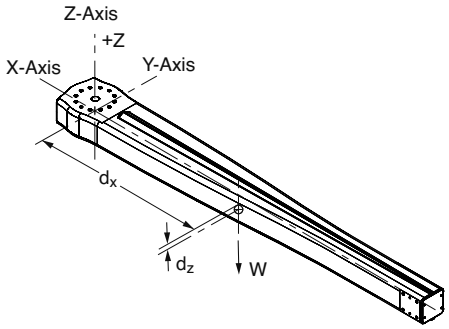

DESTACO a DOVER company

WORLD TOOL COMPOSITE BOOM - WTCB SERIES

Accelerate® Tooling Collection | Dimensions

Robot or Tool Changer Mounting Patterns

WTCB-TC01

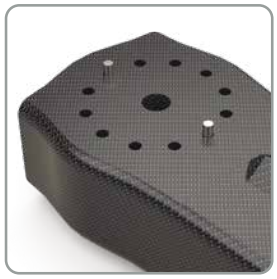

Dowels pins shown for location. Not included.

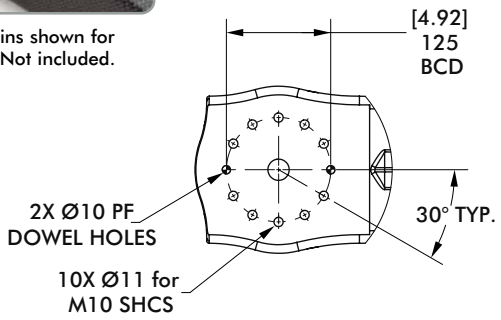

WTCB-TC02

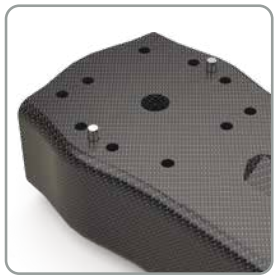

Dowels pins shown for location. Not included.

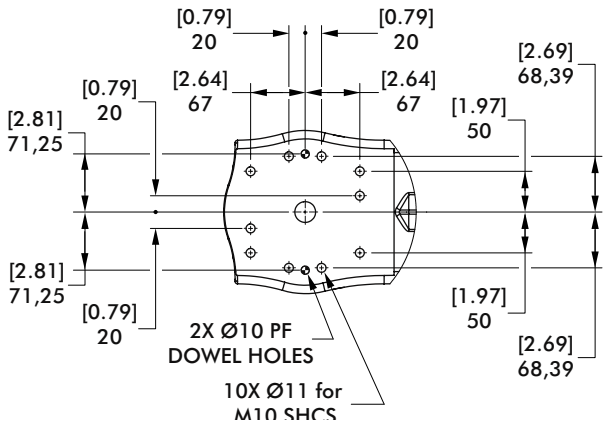

WTCB-TC03

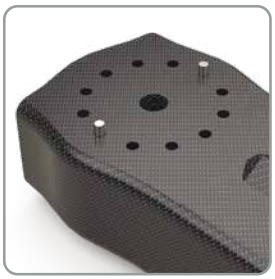

Dowels pins shown for location. Not included.

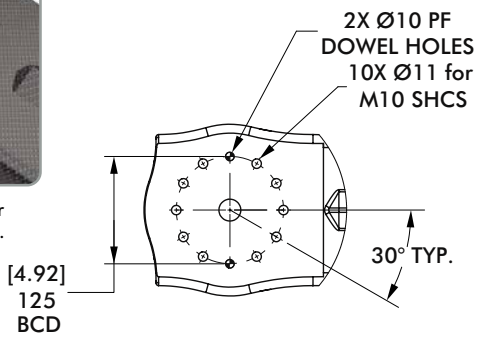

WTCB-TC04

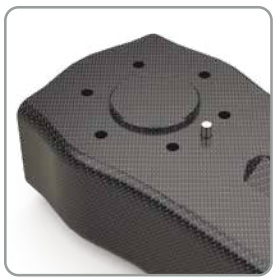

Dowels pins shown for location. Not included.

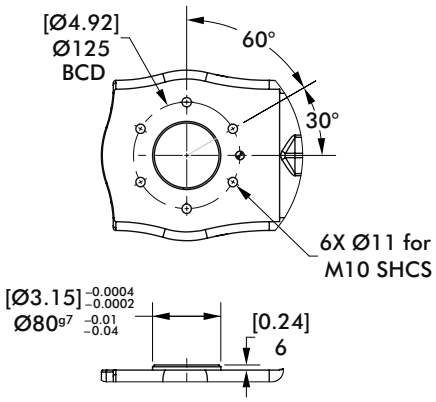

WTCB-TC05

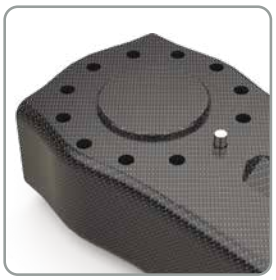

Dowels pins shown for location. Not included.

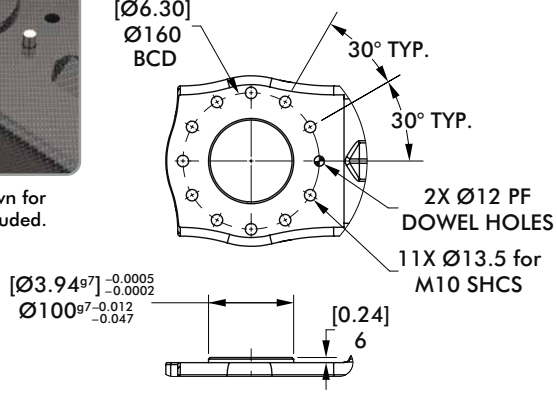

Dimensions and technical information are subject to change without notice

WORLD TOOL COMPOSITE BOOM - WTCB SERIES

Accelerate® Tooling Collection | Specifications



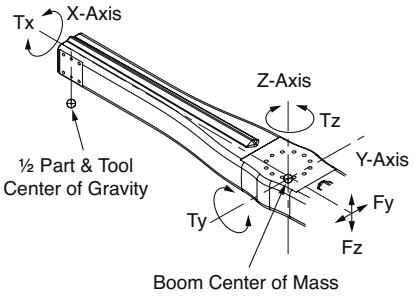

CLICK OR SCAN
QR code to open engineering guide for detailed deflection information

Center Mount Load Specifications (Max. Loads\Deflections)

Description	Designation	Units	1000mm	1700mm	2400mm
Boom Maximum Shear Load	F_y	[lbs] N	[541] 2405	[494] 2196	[446] 1983
	F_z		[440] 1957	[402] 1788	[363] 1613
Static & Dynamic Moment Capacity about X-Axis	T_x	[in-lb] Nm	[5310] 600	[4647] 525	[3983] 450
End of Boom Twist @ Moment Capacity about X-Axis			0.8°	2°	2.6°
Static & Dynamic Moment Capacity about Y-Axis	T_y	[in-lb] Nm	[7744] 875	[12612] 1425	[16374] 1850
End of Boom Deflection @ Moment Capacity about Y-Axis		[in] mm	[0.02] 0.44	[0.09] 2.3	[0.24] 6.18
Static & Dynamic Moment Capacity about Z-Axis	T_z	[in-lb] Nm	[9515] 1075	[15489] 1750	[20135] 2275
End of Boom Deflection @ Moment Capacity about Z-Axis		[in] mm	[0.01] 0.27	[0.06] 1.41	[0.15] 3.79
Static & Dynamic Moment Capacity Combined about X-Axis plus Z-Axis	T_x	[in-lb] Nm	[5310] 600	[4647] 525	[3983] 450
	T_z		[9515] 1075	[15489] 1750	[20135] 2275
End of Boom Deflection @ Combined Moment Capacity about X-Axis plus Z-Axis		[in] mm	[0.02] 0.51	[0.09] 2.3	[0.19] 4.92
Lifetime			9,000,000 cycles		

Notes:
1. Load specifications and deflection for ½ of the boom
2. Load specifications include tool changers, hanger bracket part, tooling and miscellaneous components



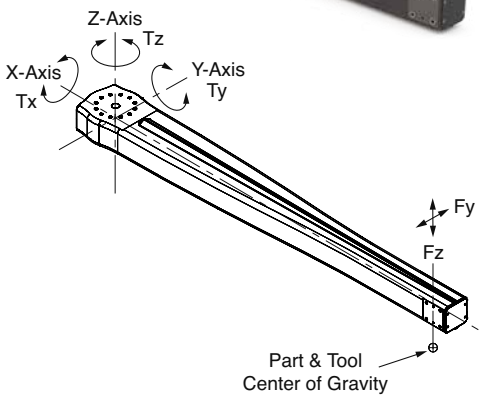

CLICK OR SCAN
QR code to open engineering guide for detailed deflection information

End Mount Load Specifications (Max. Loads\Deflections)

Description	Designation	Units	1094mm	1500mm	1703mm
Boom Maximum Shear Load	F_y	[lbs] N	[696] 3098	[637] 2833	[634] 2818
	F_z		[578] 2570	[544] 2419	[538] 2394
Static & Dynamic Moment Capacity about X-Axis	T_x	[in-lb] Nm	[7966] 900	[7966] 900	[7966] 900
End of Boom Twist @ Moment Capacity about X-Axis			1.5°	3°	4°
Static & Dynamic Moment Capacity about Y-Axis	T_y	[in-lb] Nm	[23676] 2675	[30978] 3500	[34960] 3950
Deflection @ Moment Capacity about Y-Axis		[in] mm	[0.21] 5.34	[0.53] 13.5	[0.78] 19.8
Static & Dynamic Moment Capacity about Z-Axis	T_z	[in-lb] Nm	[28544] 3225	[36288] 4100	[41156] 4650
Deflection @ Moment Capacity about Z-Axis		[in] mm	[0.11] 2.7	[0.26] 6.63	[0.38] 9.77
Static & Dynamic Moment Capacity Combined about X-Axis plus Z-Axis	T_x	[in-lb] Nm	[7966] 900	[7966] 900	[7966] 900
	T_z		[28544] 3225	[36288] 4100	[41156] 4650
Deflection @ Combined Moment Capacity about X-Axis plus Z-Axis		[in] mm	[0.12] 3.04	[0.34] 8.73	[0.47] 11.9
Lifetime			9,000,000 cycles		

Notes:
1. Load specifications include mass of complimentary components and part & tooling weight

CROSS BAR TOOLING - SGM SERIES

Accelerate® Tooling Collection | Configuration Types

SGM - Split Saddle Tooling 25mm/1 inch Crossbar Tooling

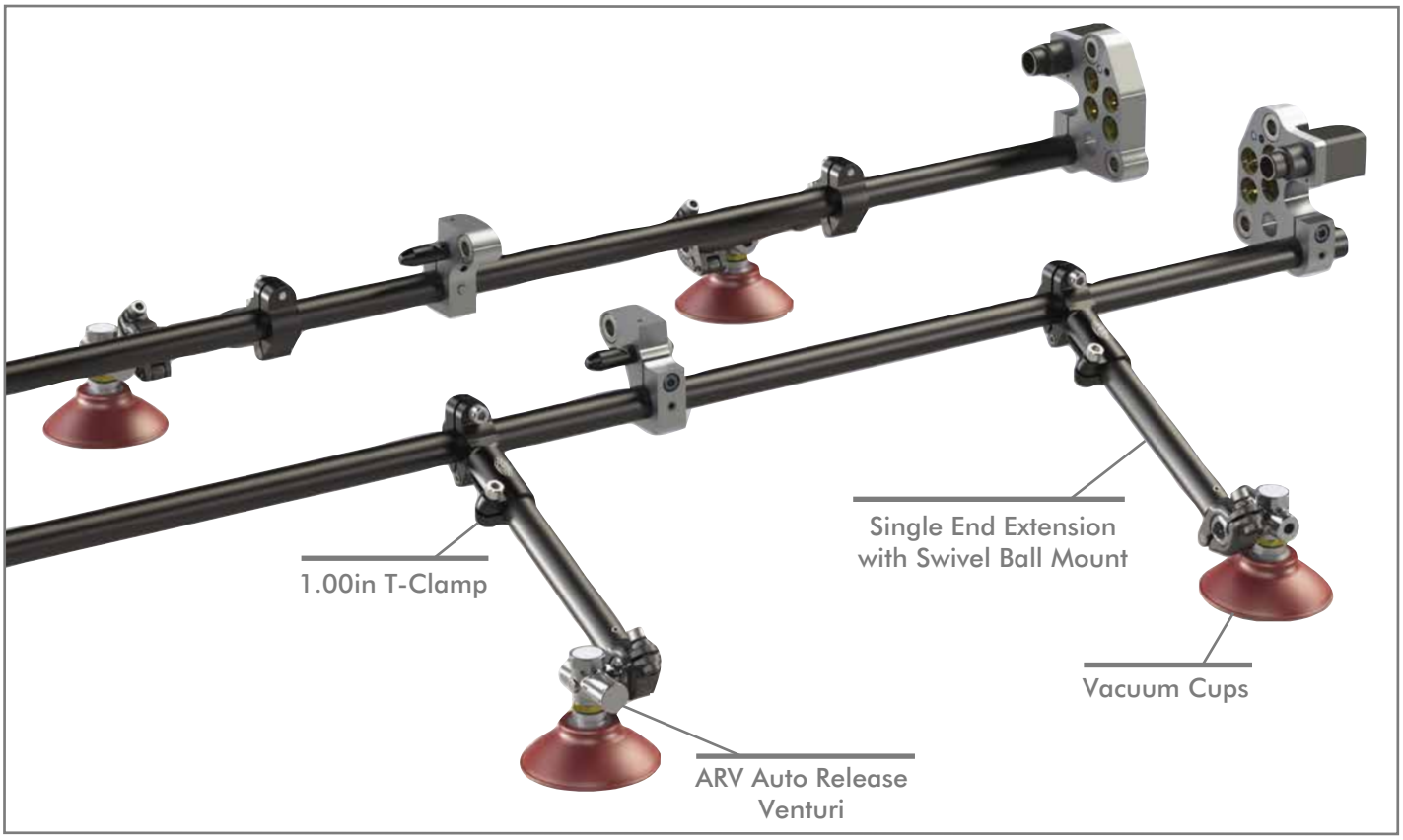

Model Number	Description	Tube Diameter	Tube Length
CPI-SGM-10-1260M-L	Left Assembly No Key	1.00 in	1260mm
CPI-SGM-10-1260M-LF	Left Front Assembly with Key		
CPI-SGM-10-1260M-LR	Left Rear Assembly with Key		
CPI-SGM-10-1260M-R	Right Assembly No Key		
CPI-SGM-10-1260M-RF	Right Front Assembly with Key		
CPI-SGM-10-1260M-RR	Right Rear Assembly with Key		
CPI-SGM-25M-1450M-L	Left Assembly No Key	25mm	1450mm
CPI-SGM-25M-1450M-LF	Left Front Assembly with Key		
CPI-SGM-25M-1450M-LR	Left Rear Assembly with Key		
CPI-SGM-25M-1450M-R	Right Assembly No Key		
CPI-SGM-25M-1450M-RF	Right Front Assembly with Key		
CPI-SGM-25M-1450M-RR	Right Rear Assembly with Key		
CPI-SGM-25M-1800M-L	Left Assembly No Key	25mm	1800mm
CPI-SGM-25M-1800M-LF	Left Front Assembly with Key		
CPI-SGM-25M-1800M-LR	Left Rear Assembly with Key		
CPI-SGM-25M-1800M-R	Right Assembly No Key		
CPI-SGM-25M-1800M-RF	Right Front Assembly with Key		
CPI-SGM-25M-1800M-RR	Right Rear Assembly with Key		

CROSS BAR TOOLING - SGM SERIES

Accelerate® Tooling Collection | Configuration Types

SGM - Split Saddle Tooling 30mm Interpress Crossbar Tooling

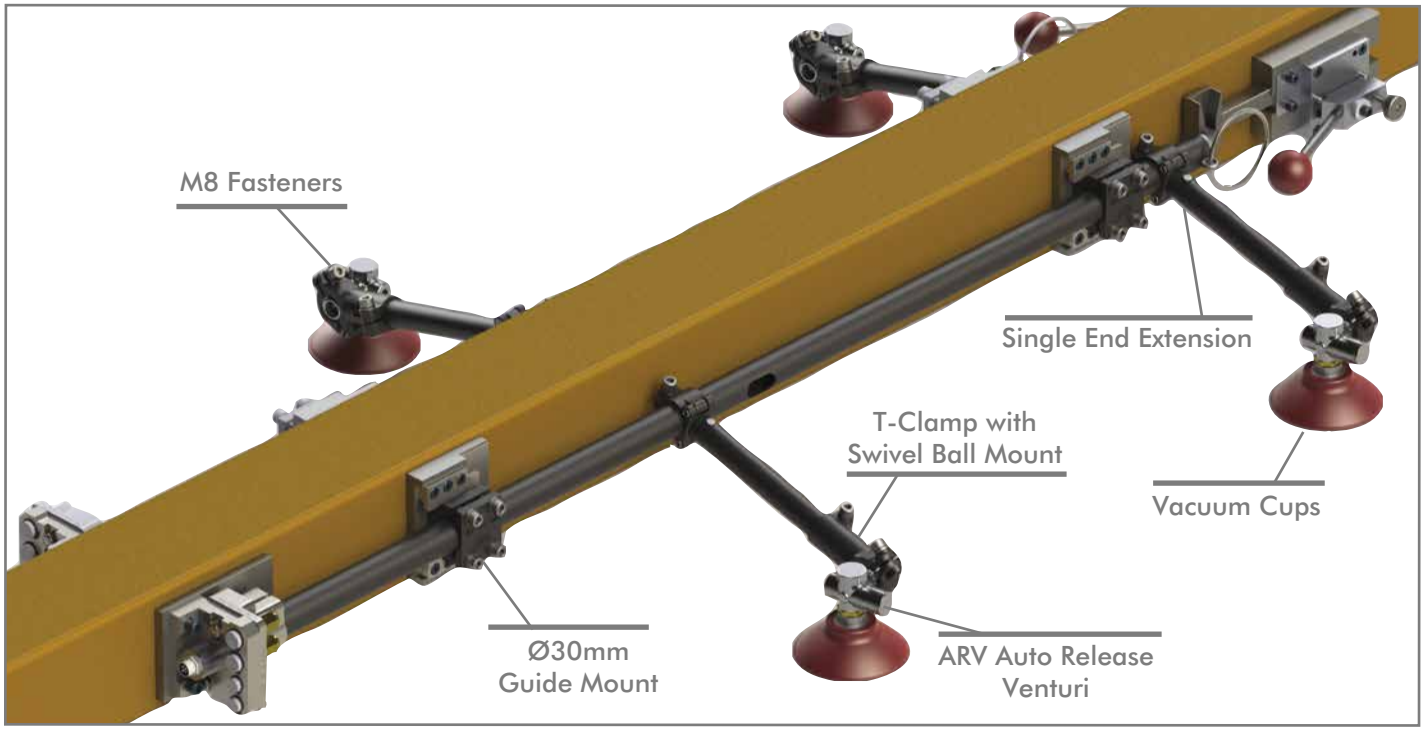

Model Number	Description
CPI-SGM-ASSY-FLC	Interpress Tool, Front Left Side, No Electric
CPI-SGM-ASSY-FRC	Interpress Tool, Front Right Side, No Electric
CPI-SGM-ASSY-RLC	Interpress Tool, Rear Left Side, No Electric
CPI-SGM-ASSY-RRC	Interpress Tool, Rear Right Side, No Electric
CPI-SGM-ASSY-FLC-EL	Interpress Tool, Front Left Side, w/Electric Connector Installed
CPI-SGM-ASSY-FRC-EL	Interpress Tool, Front Right Side, w/Electric Connector Installed
CPI-SGM-ASSY-RLC-EL	Interpress Tool, Rear Left Side, w/Electric Connector Installed
CPI-SGM-ASSY-RRC-EL	Interpress Tool, Rear Right Side, w/Electric Connector Installed

SGM Blankload Crossbar Tooling



Model Number	Description
CPI-SGM-ASSY-BT-FL	Blankload Tool, Front Left Side, No Electric
CPI-SGM-ASSY-BT-FR	Blankload Tool, Front Right Side, No Electric
CPI-SGM-ASSY-BT-RL	Blankload Tool, Rear Left Side, No Electric
CPI-SGM-ASSY-BT-RR	Blankload Tool, Rear Right Side, No Electric
CPI-SGM-ASSY-BT-FL-EL	Blankload Tool, Front Left Side, w/Electric Connector Installed
CPI-SGM-ASSY-BT-FR-EL	Blankload Tool, Front Right Side, w/Electric Connector Installed
CPI-SGM-ASSY-BT-RL-EL	Blankload Tool, Rear Left Side, w/Electric Connector Installed
CPI-SGM-ASSY-BT-RR-EL	Blankload Tool, Rear Right Side, w/Electric Connector Installed

CROSS BAR SADDLE TOOLING

Accelerate® Tooling Collection | Configuration Types

SGM Cross Bar Saddle Tooling 40mm (PXL/PL and PGB/PGA Press Tooling)

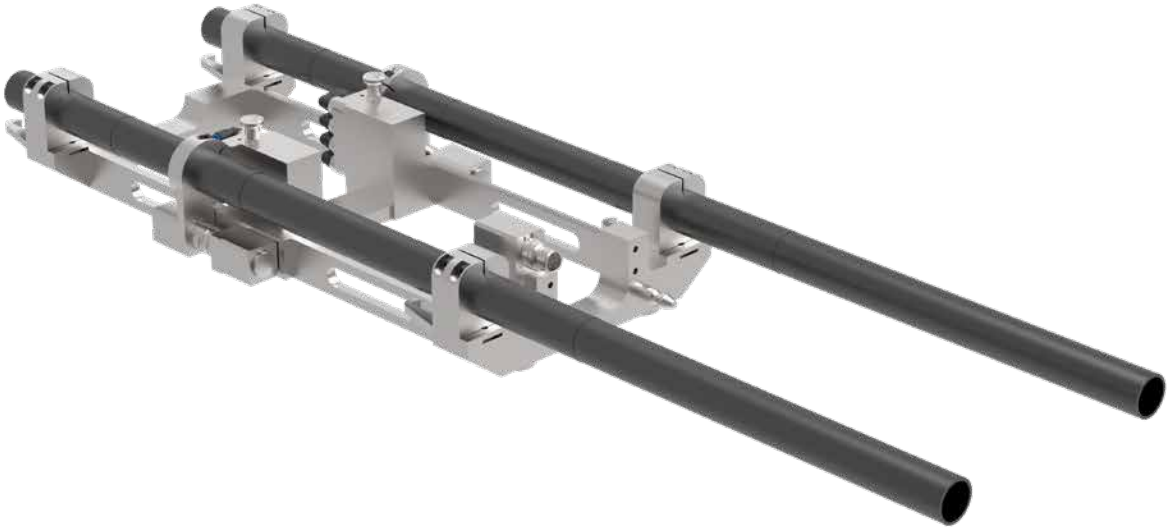

Model Number	Description
CPI-SGM-40-1200-RF-EL	Crossbar ASSY, SGM, 40mm Tube x 1200mm Length, Right Front, with Electric
CPI-SGM-40-1200-RR-EL	Crossbar ASSY, SGM, 40mm Tube x 1200mm Length, Right Rear, with Electric
CPI-SGM-40-1200-LF-EL	Crossbar ASSY, SGM, 40mm Tube x 1200mm Length, Left Front, with Electric
CPI-SGM-40-1200-LR-EL	Crossbar ASSY, SGM, 40mm Tube x 1200mm Length, Left Rear, with Electric

LWT Saddle Crossbar Tool Example

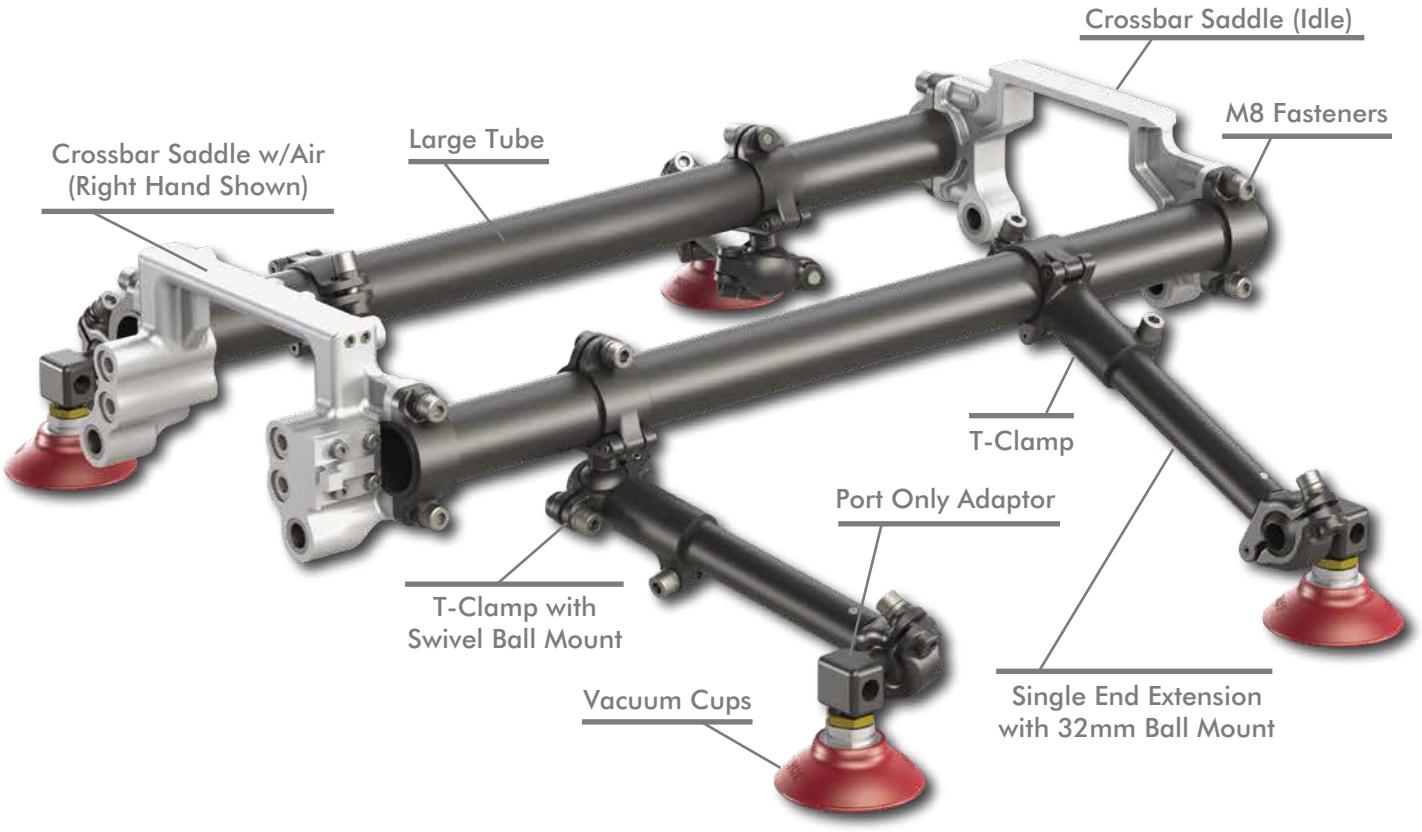

Dimensions and technical information are subject to change without notice

LIGHTWEIGHT TUBING

Accelerate® Tooling Collection | Boom/Tubing Sizes

Model Number	(Ø)	Tolerance (mm)	Weight
LWT-40-1000	40mm	±0.14	1080g/m [0.73 lb/ft]
LWT-15E-1000	1.50 in	±0.14	920g/m [0.61 lb/ft]
LWT-30-1000	30mm	+0.08/-0.14	790g/m [0.53 lb/ft]
LWT-10E-1000	1.00 in	+0.05/-0.10	601g/m [0.41 lb/ft]
LWT-25-1000	25mm	+0.08/-0.14	640g/m [0.43 lb/ft]
LWT-20-1000	20mm	±0.08	490g/m [0.33 lb/ft]

LWT Lightweight Boom/Tube
(3.5 mm or 0.125 in. Wall)



Material: High Strength Aluminum

LWT Lightweight Boom Deflection Charts

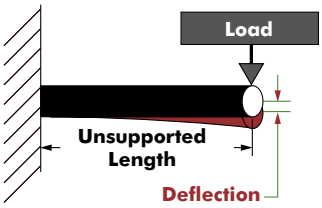

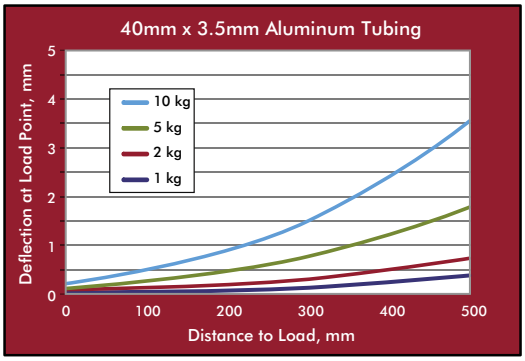

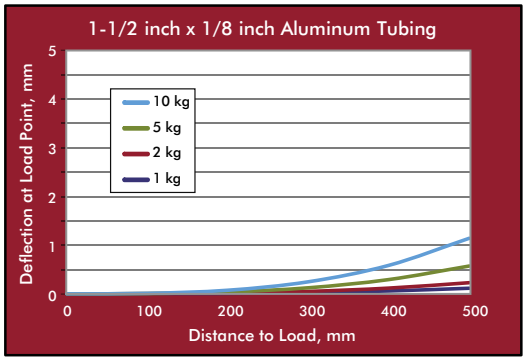

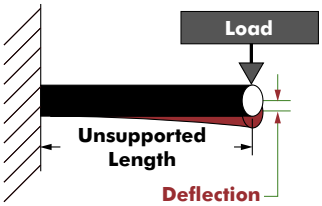

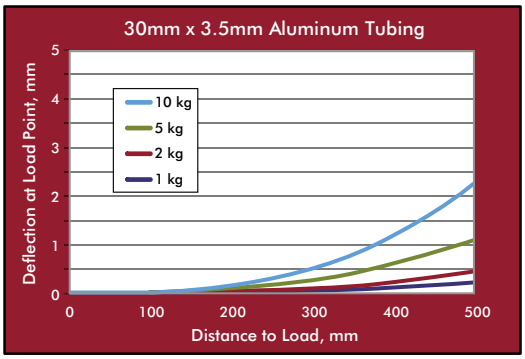

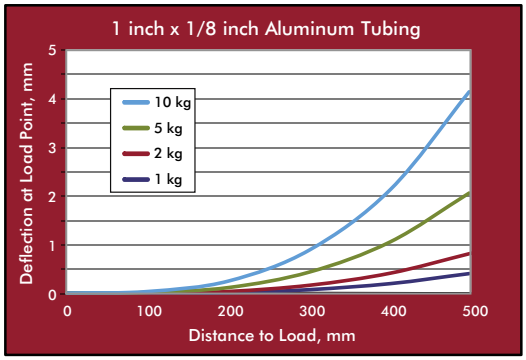

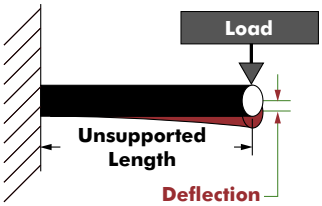

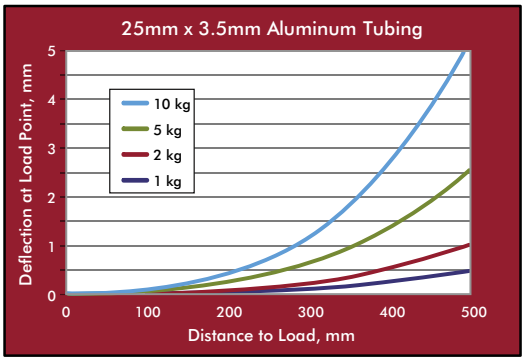

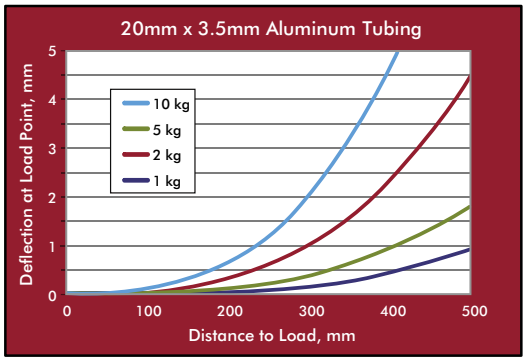

Note: Performance may vary if used with non-DESTACO components

ACCELERATE® TOOLING COLLECTION

Accelerate® Tooling Collection | Dimensions

GRS-SD-40 Crossbar Saddle w/Air (Left Hand)

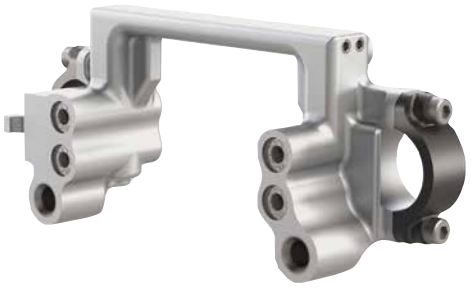

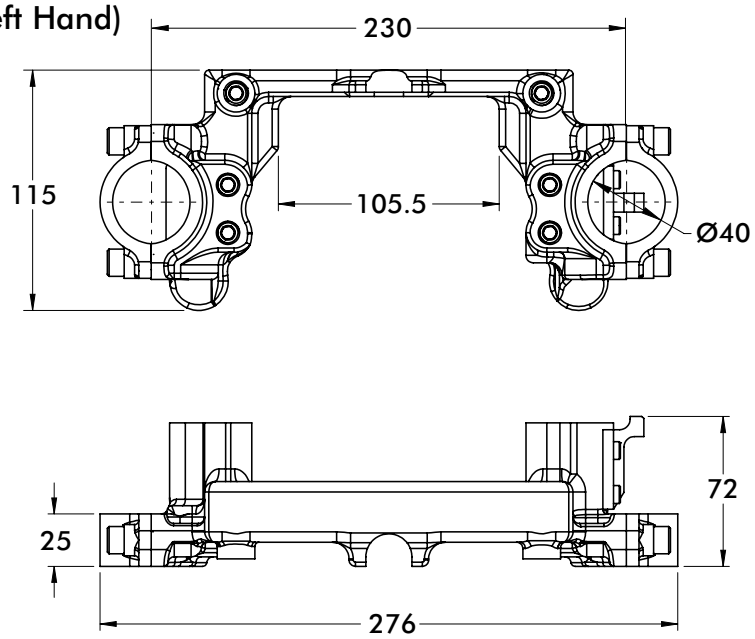

Material: High Strength Aluminum

Model Number	Weight
GRS-SD-40-LHS-A	938g [2.06 lb]

GRS-SD-40 Crossbar Saddle w/Air (Right Hand)



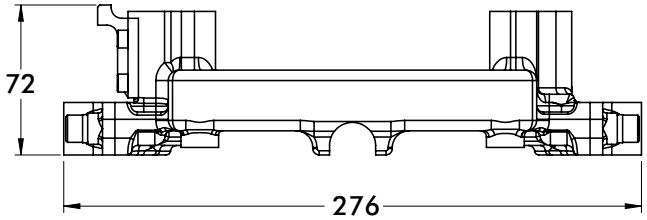

Material: High Strength Aluminum

Model Number	Weight
GRS-SD-40-RHS-A	938g [2.06 lb]

GRS-SD-40 Crossbar Saddle (Idle)



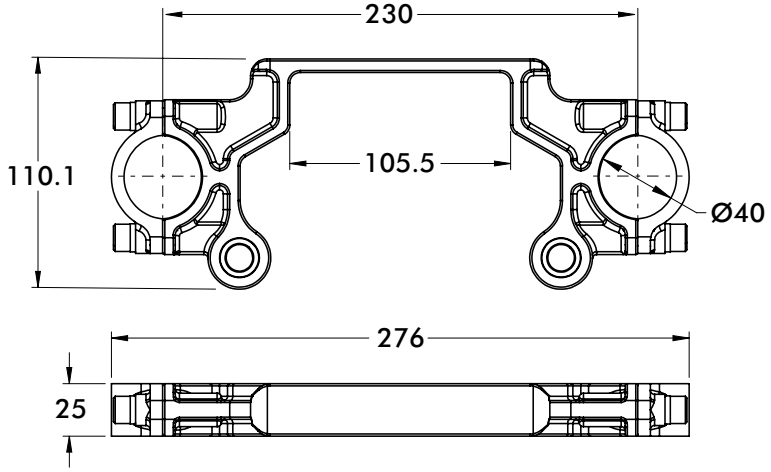

Material: High Strength Aluminum

Model Number	Weight
GRS-SD-40-NA-A	535g [1.18 lb]

Dimensions and technical information are subject to change without notice

Tri-Axis Rail Tooling Example with Accelerate® Tooling

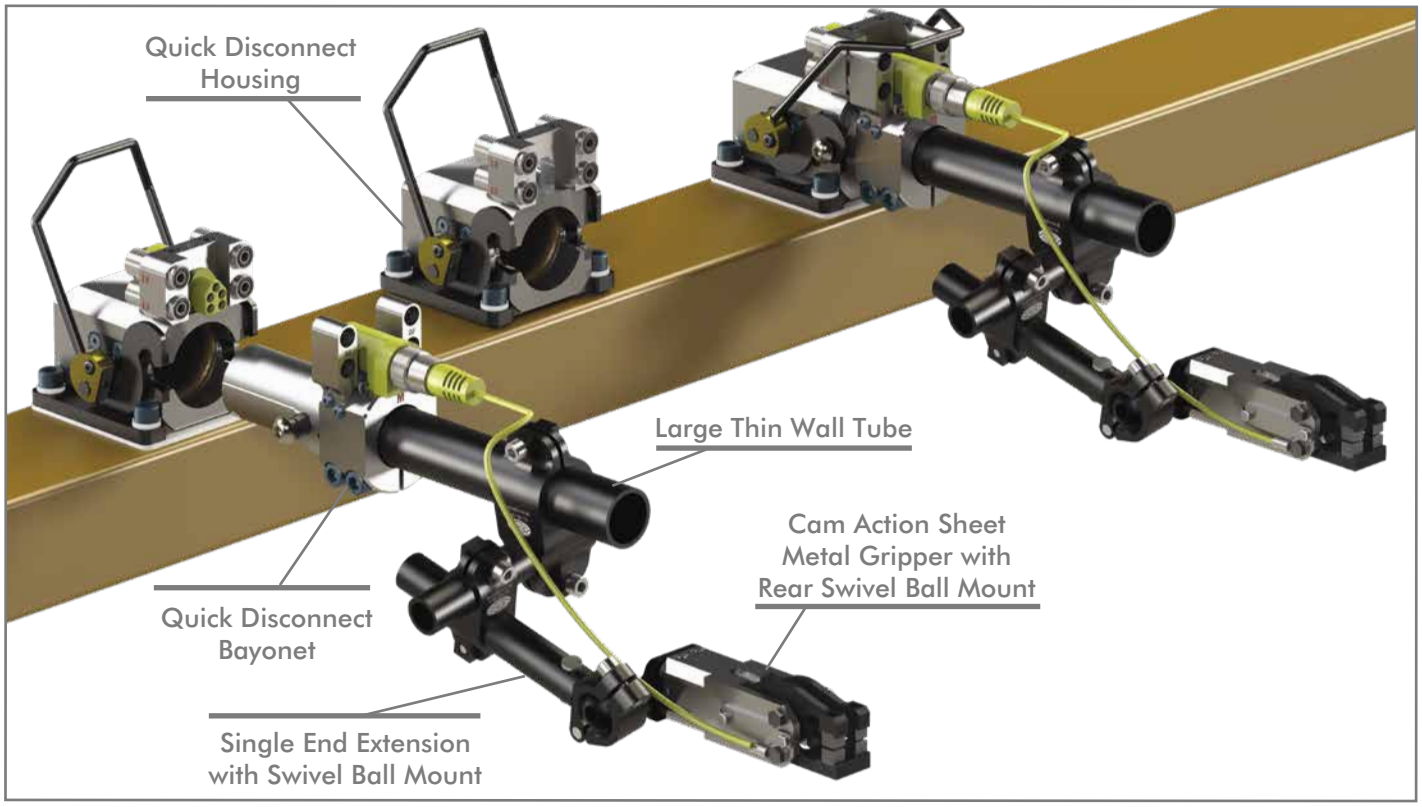

LWT Tri-Axis Tooling Example

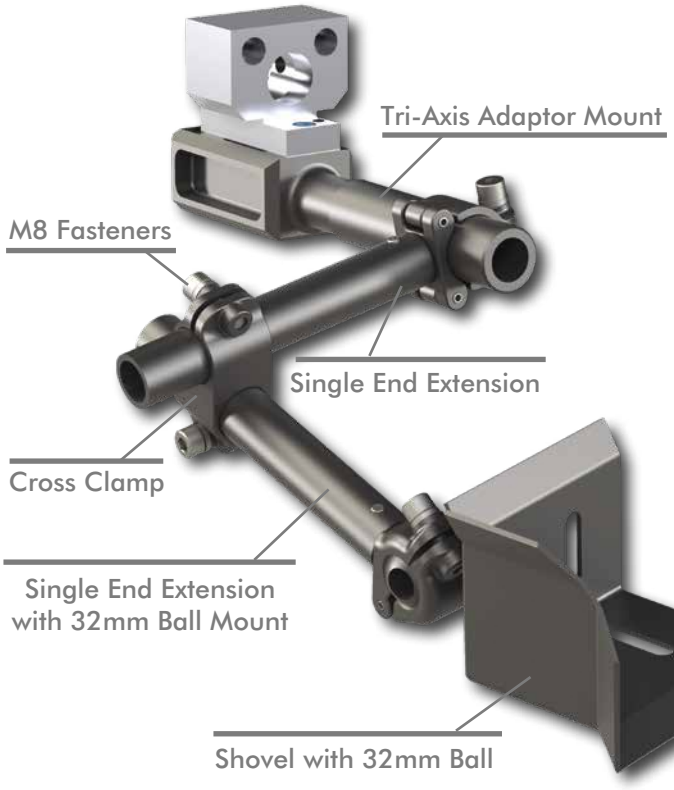

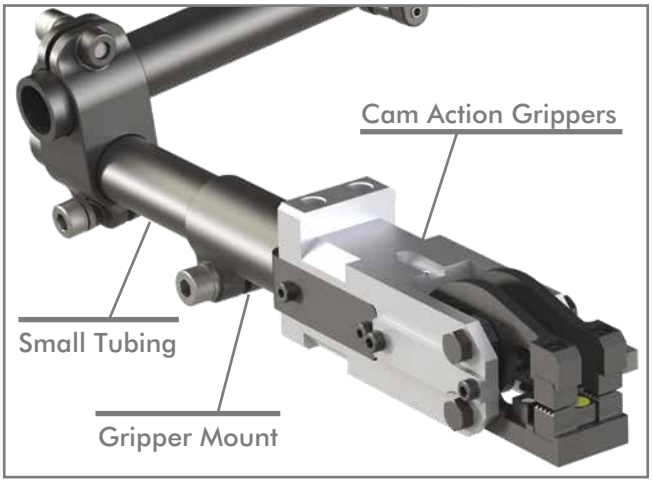

TCF, TCA SERIES

Accelerate® Tooling Collection | Dimensions

TCF Flange Mount Ø20 & Ø25mm



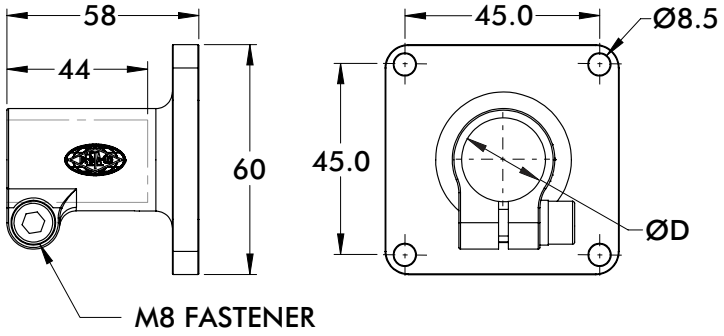

Material: High Strength Aluminum

Model Number	ØD	Weight
TCF-20M-A	20mm	121g [0.27 lb]
TCF-25M-A	25mm	98g [0.22 lb]

TCA T-Clamp Transition Brackets



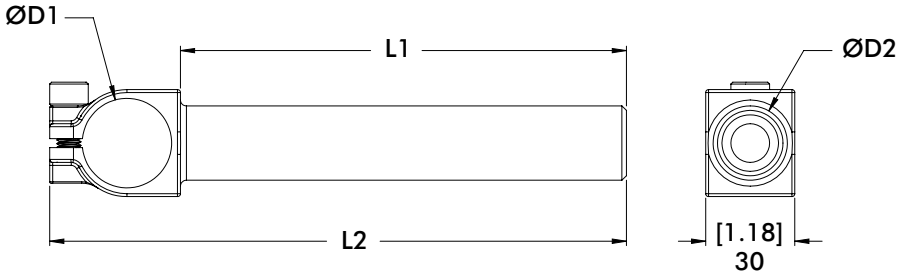

Model Number	ØD1	ØD2	L1	L2	Material	Weight
TCA-25M-25M-150-A	.98 [25]	.98 [25]	150 [5.91]	194 [7.64]	Aluminum	160g [0.35 lb]
TCA-30M-25M-150-A	1.19 [30]	.98 [25]	150 [5.91]	194 [7.64]	Aluminum	162g [0.36 lb]
TCA-20M-20M-400-A	.79 [20]	.79 [20]	400 [15.74]	438 [17.24]	Aluminum	239g [0.53 lb]
TCA-30M-30M-400-A	1.18 [30]	1.18 [30]	400 [15.74]	447 [17.60]	Aluminum	394g [0.87 lb]
TCA-20M-20M-400-S	.79 [20]	.79 [20]	400 [15.74]	438 [17.24]	Steel	384g [0.85 lb]
TCA-30M-30M-400-S	1.18 [30]	1.18 [30]	400 [15.74]	447 [17.60]	Steel	622g [1.37 lb]

TCLD SERIES

Accelerate® Tooling Collection | Dimensions

TCLD T-Clamp

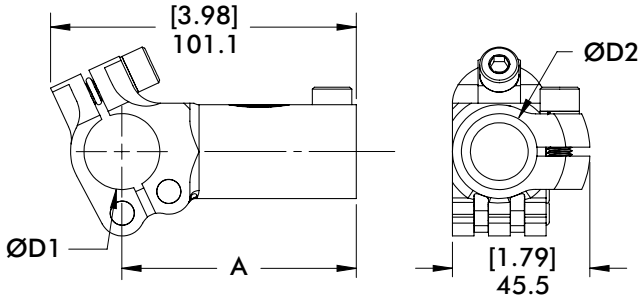



Material: High Strength Aluminum

Model Number	ØD1	ØD2	A	B	Weight
TCLD-10E-10E-A	Ø1.00 in	Ø1.00 in	77.5 [3.05]	101.1 [3.98]	194g [0.43 lb]
TCLD-10E-25M-A	Ø1.00 in	Ø25mm	77.5 [3.05]	101.1 [3.98]	194g [0.43 lb]
TCLD-25M-25M-A	Ø25mm	Ø25mm	77.5 [3.05]	101.1 [3.98]	194g [0.43 lb]
TCLD-12E-10E-A	Ø1.25 in	Ø1.00 in	74.5 [2.93]	99.1 [3.90]	186g [0.41 lb]
TCLD-30M-25M-A	Ø30mm	Ø25mm	74.5 [2.93]	99.1 [3.90]	192g [0.42 lb]

TCLD T-Clamp

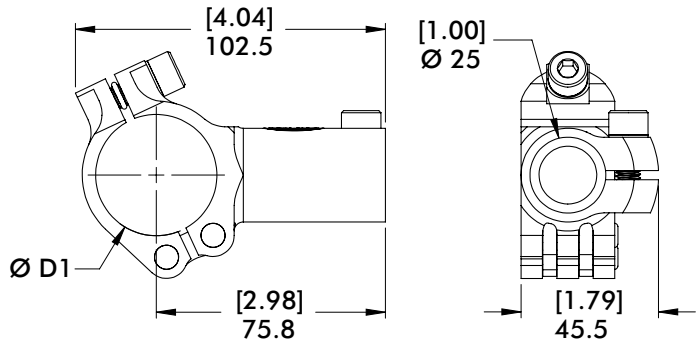



Material: High Strength Aluminum

Model Number	ØD1	ØD2	Weight
TCLD-15E-10E-A	Ø1.50 in	Ø1.00 in	193g [0.43 lb]
TCLD-40M-25M-A	Ø40mm	Ø25mm	191g [0.42 lb]

TCLD Angled T- Clamps

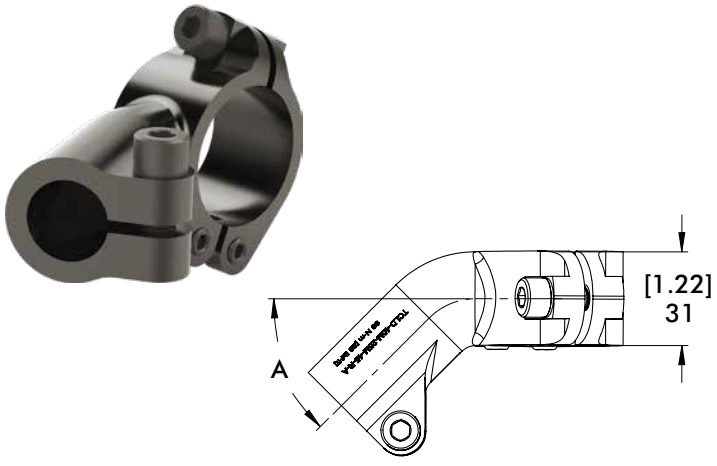

Material: High Strength Aluminum

Model Number	A	Weight
TCLD-40M-20M-30-L-A	30°	225g [0.50 lb]
TCLD-40M-20M-30-R-A	30°	225g [0.50 lb]
TCLD-40M-20M-45-L-A	45°	230g [0.51 lb]
TCLD-40M-20M-45-R-A	45°	230g [0.51 lb]
TCLD-40M-25M-30-L-A	30°	201g [0.44 lb]
TCLD-40M-25M-30-R-A	30°	201g [0.44 lb]
TCLD-40M-25M-45-L-A	45°	206g [0.45 lb]
TCLD-40M-25M-45-R-A	45°	206g [0.45 lb]

TCL SERIES

Accelerate® Tooling Collection | Dimensions

TCL Ball Clamps Ø32



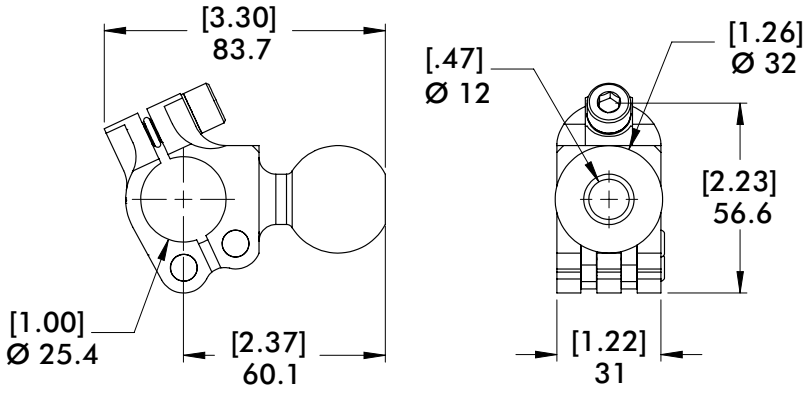

Material: High Strength Aluminum

Model Number	Weight
TCLD-10E-32B-A	166g [0.37 lb]

TCL Ø32 Ball to Ø25



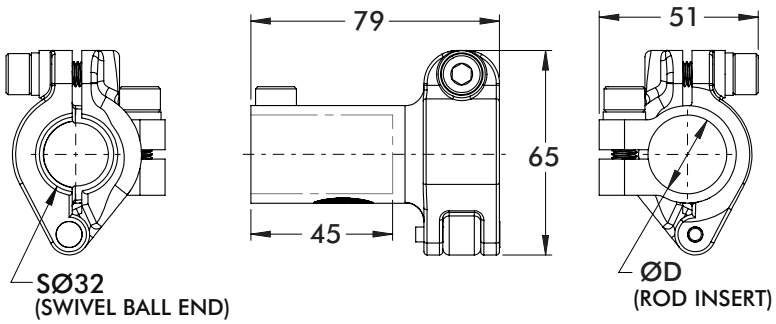

Material: High Strength Aluminum

Model Number	ØD	Weight
TCL-32B-25M-90-A	Ø25	145g [0.32 lb]
TCL-32B-20M-90-A	Ø20	157g [0.35 lb]
TCL-32B-10E-90-A	1 in	157g [0.35 lb]

TCL Ø25mm/1 in to Ø32



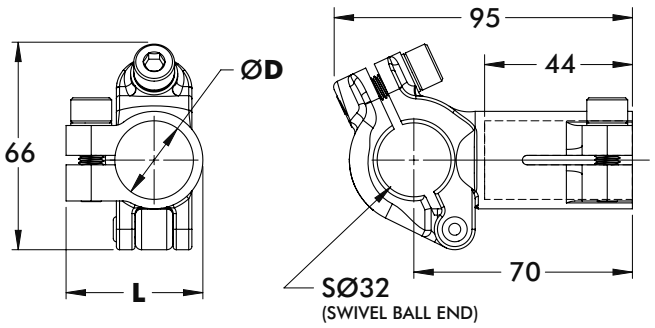

Material: High Strength Aluminum

Model Number	ØD	Weight
TCL-25M-32B-A	Ø25	147g [0.32 lb]
TCL-20M-32B-A	Ø20	128g [0.28 lb]
TCL-10E-32B-A	1 in	141g [0.31 lb]

Dimensions and technical information are subject to change without notice

SEC Wrist Clamp

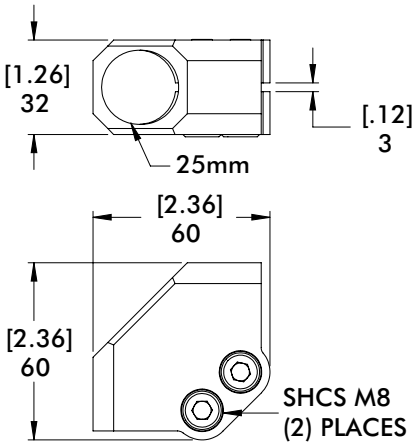



Material: Aluminum

Model Number	Weight
SEC-25M-25M-A	[0.10 lb] 47g

CL SERIES

Accelerate® Tooling Collection | Dimensions

CL Cross Clamps

Material: High Strength Aluminum

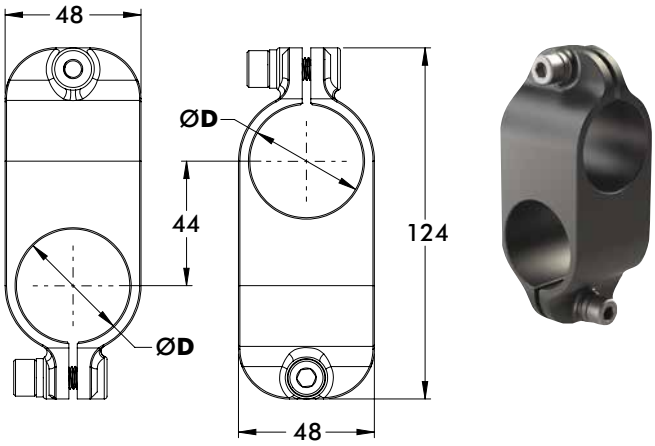

Ø40mm/1.50 in to Ø40mm/1.50 in Cross Clamp

Model Number	ØD	Weight
CL-40M-40M-A	40mm	233g [0.51 lb]
CL-15E-15E-A	1.50 in	283g [0.62 lb]

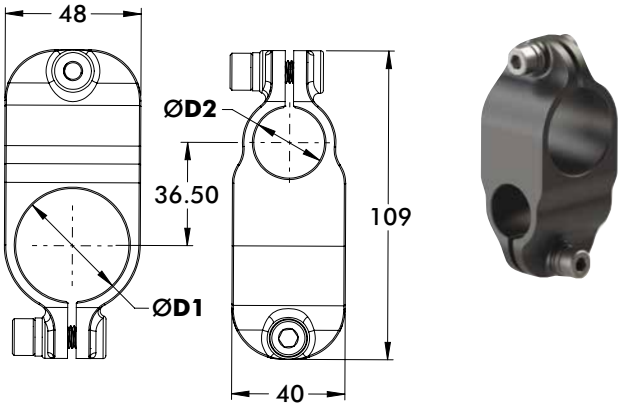

Ø40mm/1.50 in to Ø25mm/1.00 in Cross Clamp

Model Number	ØD1	ØD2	Weight
CL-40M-25M-A	40mm	25mm	214g [0.47 lb]
CL-15E-10E-A	1.50 in	1.00 in	223g [0.50 lb]

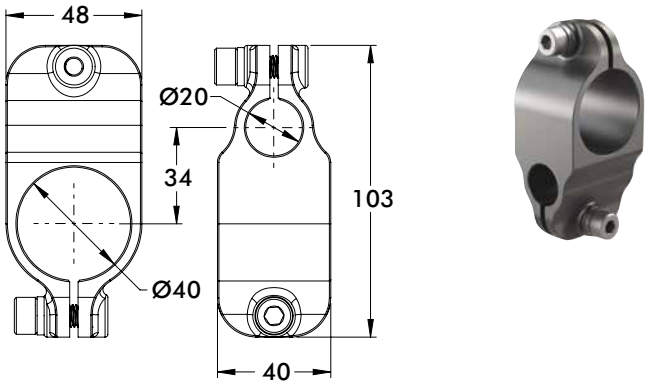

Ø40mm to Ø20mm Cross Clamp

Model Number	Weight
CL-40M-20M-A	202g [0.45 lb]

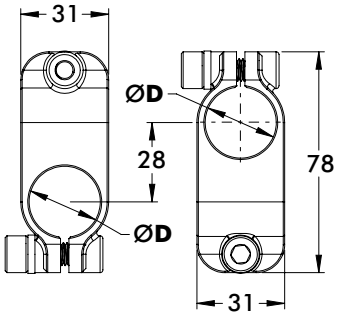

Ø25mm/1.00 in to Ø25mm/1.00 in Cross Clamp

Model Number	ØD	Weight
CL-25M-25M-A	25mm	102g [0.22 lb]
CL-10E-10E-A	1.00 in	105g [0.23 lb]

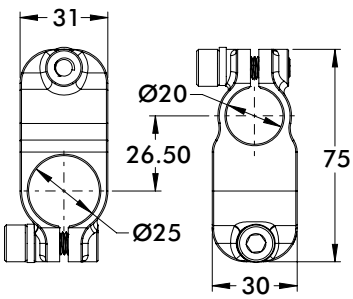

Ø25mm to Ø20mm Cross Clamp

Model Number	Weight
CL-25M-20M-A	98g [0.22 lb]

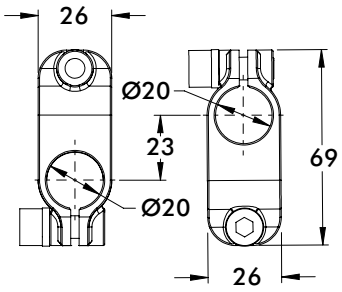

Ø20mm to Ø20mm Cross Clamp

Model Number	Material	Weight
CL-20M-20M-A	Aluminum	52g [0.11 lb]
CL-20M-20M-S	Steel	178g [0.39 lb]

Dimensions and technical information are subject to change without notice

CL Cross Clamps

Material: High Strength Aluminum

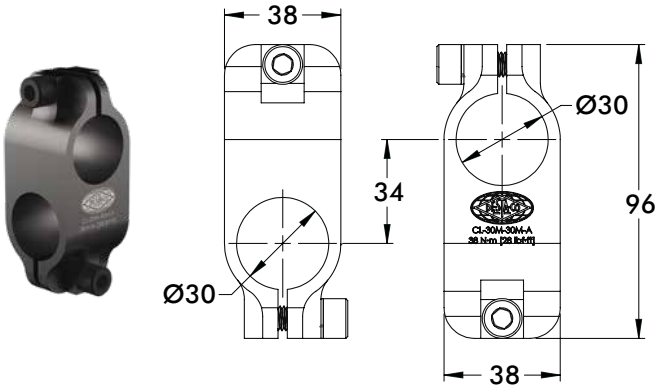

Ø30mm to Ø30mm Cross Clamp

Model Number	Material	Weight
CL-30M-30M-A	Aluminum	200g [0.44 lb]
CL-30M-30M-S	Steel	415g [0.91 lb]

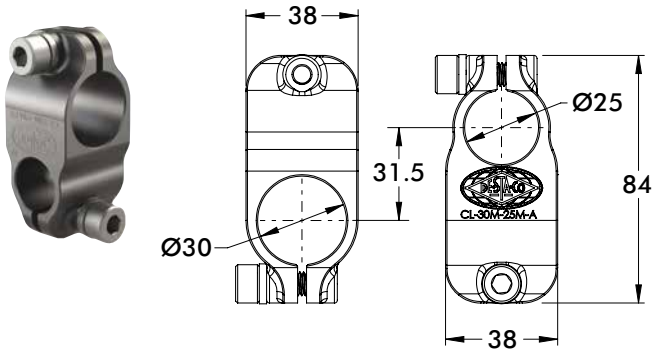

Ø30mm to Ø25mm Cross Clamp

Model Number	Weight
CL-30M-25M-A	148g [0.33 lb]

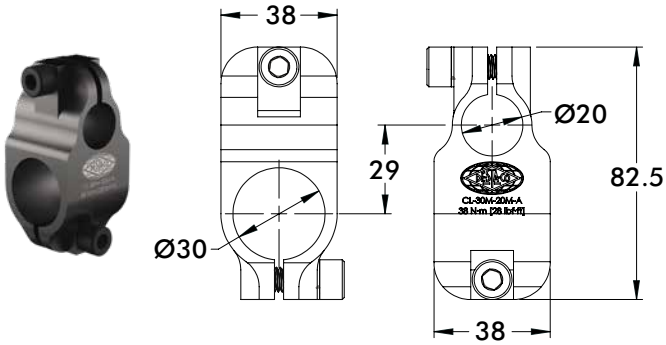

Ø30mm to Ø20mm Cross Clamp

Model Number	Weight
CL-30M-20M-A	125g [0.28 lb]

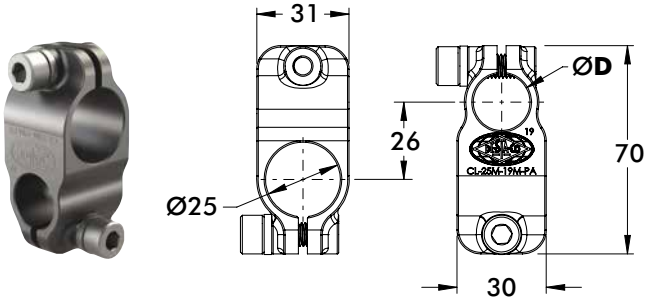

Ø25mm to Apple Core Cross Clamp

Model Number	ØD	Weight
CL-25M-19M-PA-A	19	95g [0.21 lb]
CL-25M-20M-PA-A	20	94g [0.21 lb]

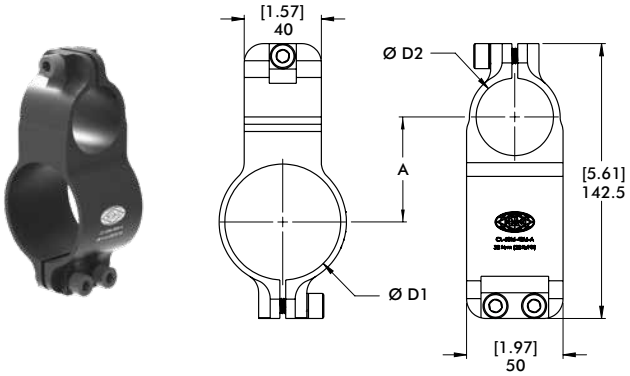

Ø60mm/2.50 in to Ø40mm/1.50 in Cross Clamp

Model Number	ØD1 mm [in]	ØD2 mm [in]	A mm [in]	Weight g [lb]
CL-60M-40M-A	60	40	54,5	276 [0.61]
CL-25E-15E-A	[2.50]	[1.50]	[2.13]	271 [0.60]

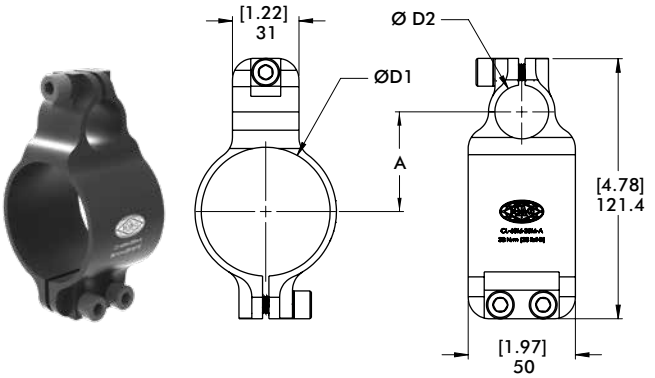

Ø60mm/2.50 in to Ø25mm/1.00 in Cross Clamp

Model Number	ØD1 mm [in]	ØD2 mm [in]	A mm [in]	Weight g [lb]
CL-60M-25M-A	60	25	46,5	220 [0.49]
CL-25E-10E-A	[2.50]	[1.00]	[1.91]	228 [0.50]

PC SERIES

Accelerate® Tooling Collection | Dimensions

PC Parallel Clamps



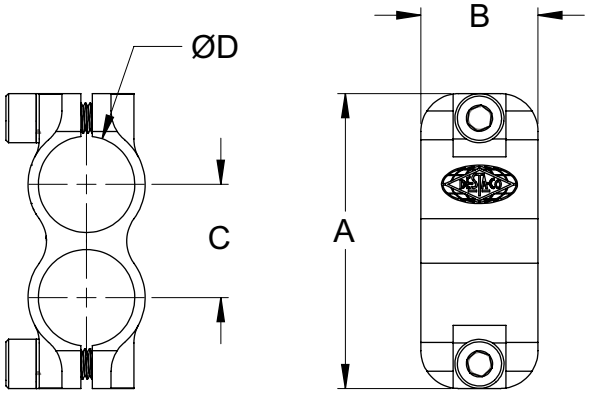

Model Number	A	B	C	ØD	Material	Weight
PC-10E-10E-A	[3.07] 78	[1.22] 31	[1.18] 30	[1.00] 25.4	Aluminum	[0.21 lb] 95g
PC-20M-20M-A	[2.72] 69	[1.02] 26	[0.91] 23	[0.79] 20	Aluminum	[0.18 lb] 83g
PC-20M-20M-S	[2.72] 69	[1.02] 26	[0.91] 23	[0.79] 20	Steel	[0.39 lb] 177g
PC-25M-25M-A	[3.07] 78	[1.22] 31	[1.18] 30	[1.00] 25.4	Aluminum	[0.21 lb] 93g
PC-30M-30M-A	[3.86] 98	[1.50] 38	[1.34] 34	[1.18] 30	Aluminum	[0.34 lb] 155g
PC-30M-30M-S	[3.86] 98	[1.50] 38	[1.34] 34	[1.18] 30	Steel	[0.83 lb] 378g



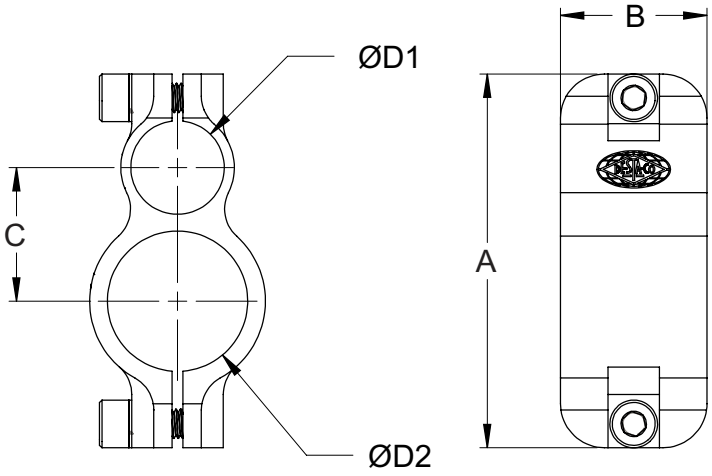

Model Number	A	B	C	ØD1	ØD2	Weight
PC-15E-10E-A	[4.02] 102	[1.57] 40	[1.44] 36.5	[1.00] 25.4	[1.50] 38.1	169g [0.37 lb]
PC-30M-20M-A	[3.29] 83.5	[1.5] 38	[1.12] 28.5	[0.79] 20	[1.18] 30	129g [0.28 lb]
PC-30M-25M-A	[3.52] 89.5	[1.5] 38	[1.24] 31.5	[0.98] 25	[1.18] 30	136g [0.30 lb]
PC-40M-25M-A	[4.02] 102	[1.57] 40	[1.44] 36.5	[0.98] 25	[1.57] 40	158g [0.35 lb]

Dimensions and technical information are subject to change without notice

ES SERIES

Accelerate® Tooling Collection | Dimensions

ES Single End Extensions

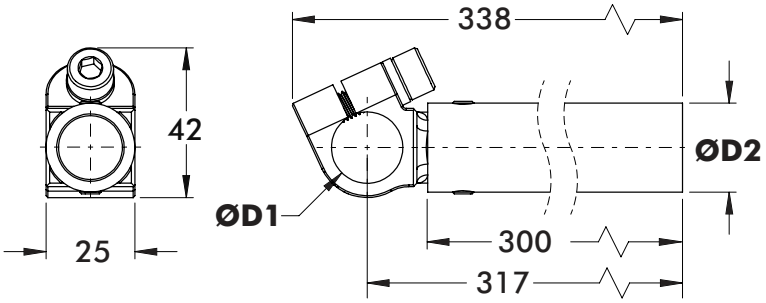



Material: High Strength Aluminum

Model Number	ØD1	ØD2	Weight
ES-20M-25M-300-A	20mm	25mm	250g [0.55 lb]
ES-19M-25M-300-A	19mm	25mm	250g [0.55 lb]
ES-19M-10E-300-A	19mm	1.00 in	269g [0.59 lb]

ES Ø20 to Ø20

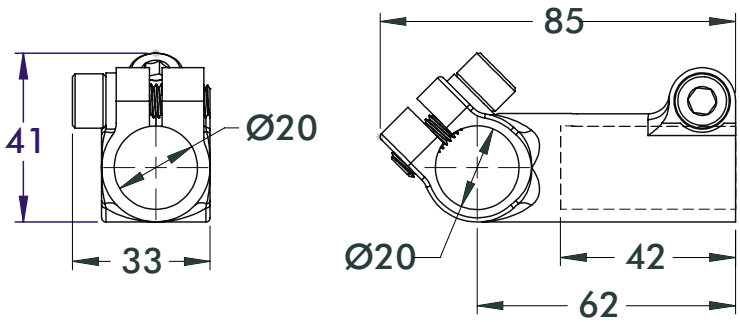



Material: High Strength Aluminum

Model Number	Weight
ES-20M-20M-A	100g [0.22 lb]

Ball Extensions

ES 32mm

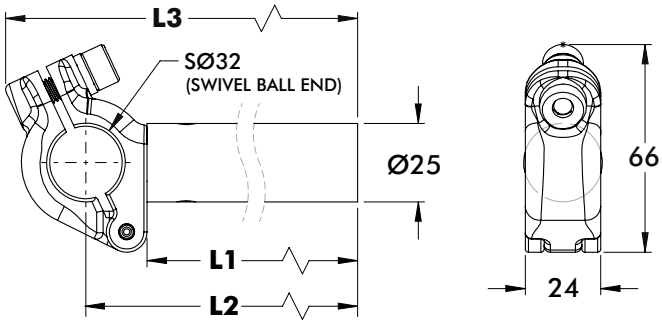



Material: High Strength Aluminum

Model Number	L1	L2	L3	Weight
ES-32B-10E-300-A	300	320	345	277g [0.61 lb]
ES-32B-20M-300-A	300	320	345	225g [0.50 lb]
ES-32B-25M-300-A	300	320	345	262g [0.56 lb]
ES-32B-25M-600-A	600	620	645	437g [0.96 lb]

ES, ESS SERIES

Accelerate® Tooling Collection | Dimensions

ES Ball Extension 28.58mm



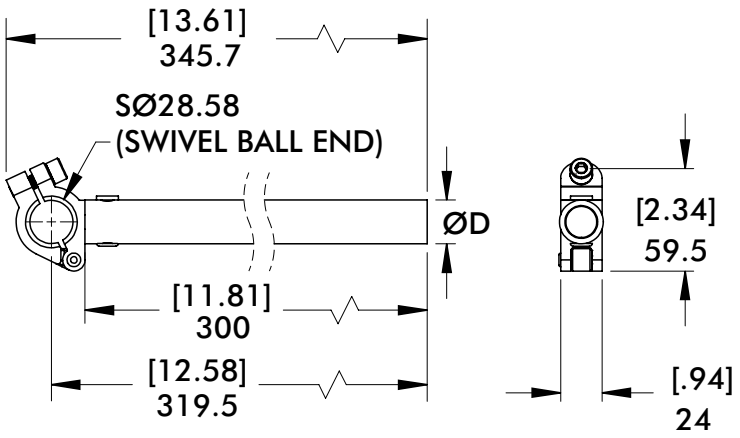

Material: High Strength Aluminum

Model Number	ØD	Weight
ES-B112-25M-300-A	[.98] 25	[0.67 lb] 302g
ES-B112-10E-300-A	[1.00] 25.4	[0.67 lb] 302g

ESS Ball Extension 32mm



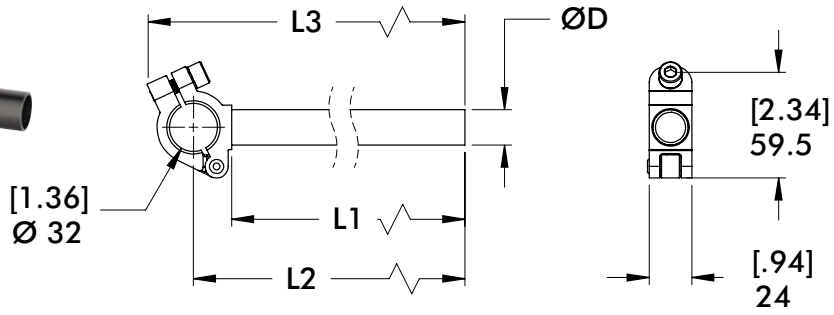

Material: Steel

Model Number	ØD	L1	L2	L3	Weight
ESS-32B-20M-300-S	20 [.79]	298 [11.73]	319.5 [12.58]	345 [13.58]	410g [0.90 lb]
ESS-32B-20M-600-S	20 [.79]	598 [23.54]	598 [23.54]	645 [25.39]	674g [1.48 lb]
ESS-32B-30M-300-S	30 [1.18]	298 [11.73]	319.5 [12.58]	345 [13.58]	516g [1.14 lb]
ESS-32B-30M-600-S	30 [1.18]	598 [23.54]	598 [23.54]	645 [25.39]	830g [1.83 lb]

ESS-90 Ball Extension 32mm



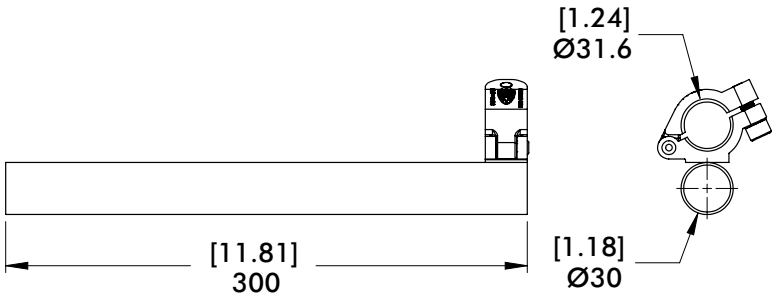

Model Number	ØD	Weight
ESS-32B-30M-90-300-S	30 [1.18]	518.4g [1.14 lb]

Dimensions and technical information are subject to change without notice

GTA - Tri Axis Adaptor Mounts

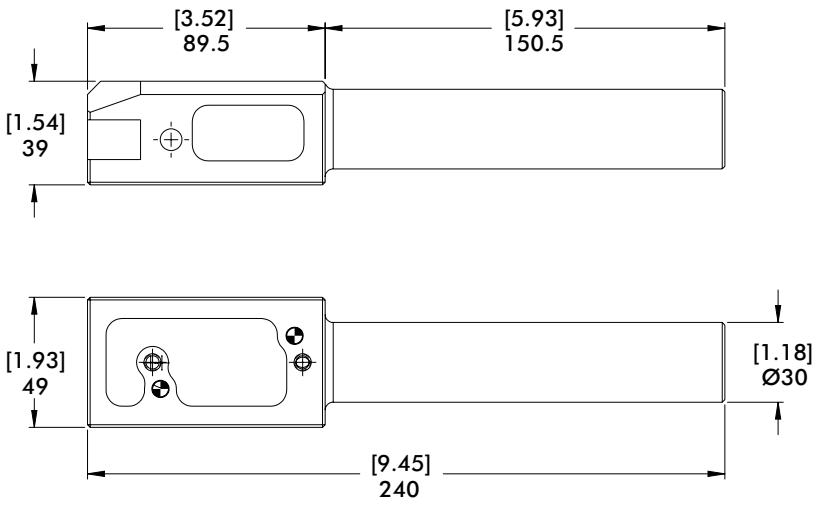



Material: High Strength Aluminum

Model Number	Weight
GTA-30-150	412g [0.91 lb]

GTA

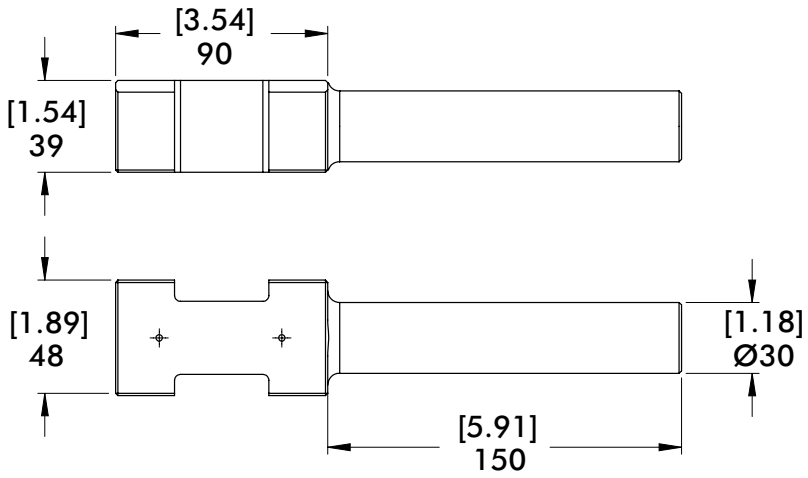

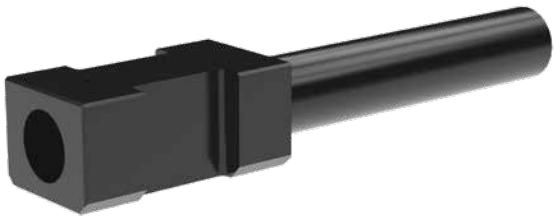

Material: High Strength Aluminum

Model Number	Weight
GTA-30-LTP	499g [1.10 lb]

LTP

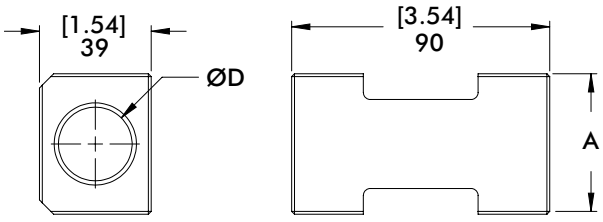



Material: Steel

Model Number	A	ØD	Weight
CPI-LTP-B-10	48 [1.89]	25.4 [1.00]	771g [1.70 lb]
CPI-LTP-B-11	49 [1.93]	27.3 [1.07]	726g [1.60 lb]

TPA SERIES

Accelerate® Tooling Collection | Dimensions

TPA Single Flange Mount

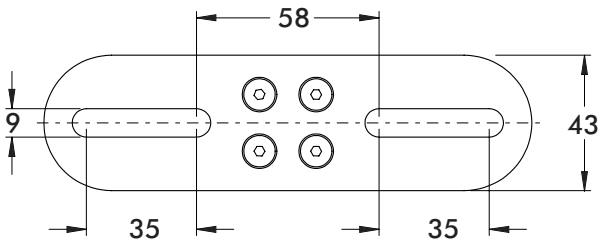

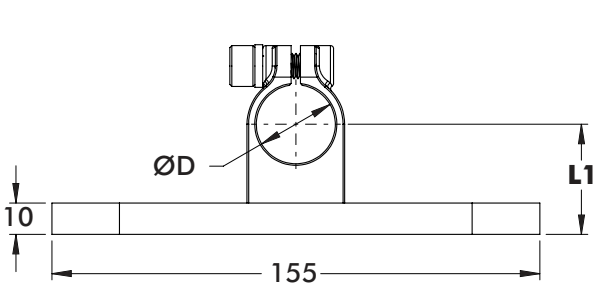

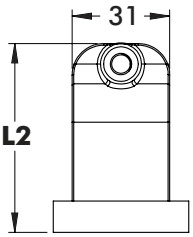



TPA-25-35

TPA-30-35



TPA-25-65
TPA-30-65

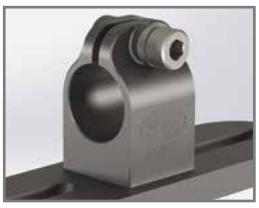

Configured 90°

Material: High Strength Aluminum

Model Number	L1	L2	ØD	Weight
TPA-20-35-LWT-A	35	60	20	234g [0.52 lb]
TPA-25-35-LWT-A	35	60	25	246g [0.54 lb]
TPA-25-65-LWT-A	63	88	25	322g [0.71 lb]
TPA-30-35-LWT-A	35	67	30	265g [0.58 lb]
TPA-30-65-LWT-A	63	95	30	361g [0.80 lb]

TPA Double Flange Mount

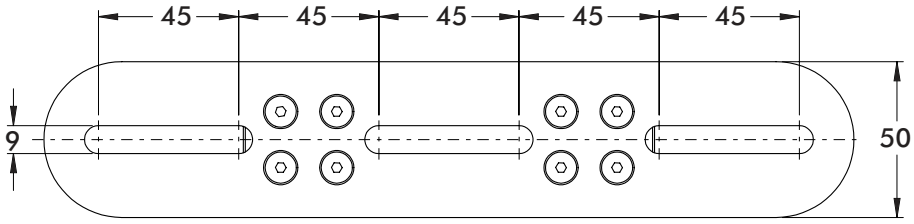



Material: High Strength Aluminum

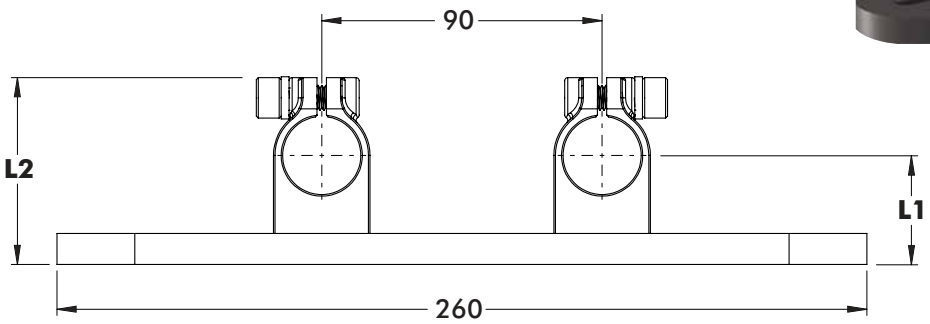



Configured 90°

Model Number	L1	L2	Weight
TPA-25-25-65-LWT-A	65	88	644g [1.42 lb]

TPA SERIES

Accelerate® Tooling Collection | Dimensions

TPA Base Mount

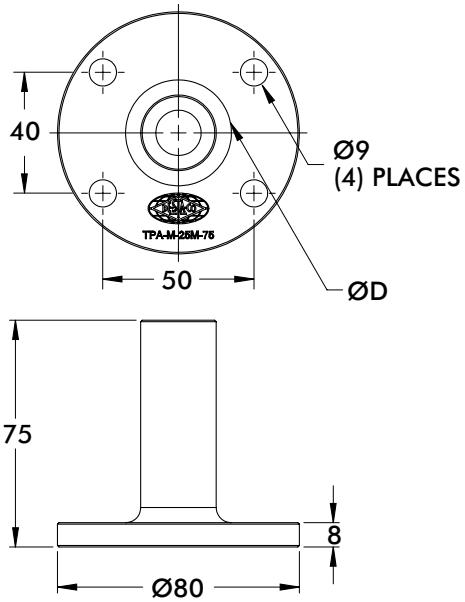



Material: High Strength Aluminum

Model Number	ØD	Weight
TPA-M-20M-75	20mm	151g [0.33 lb]
TPA-M-25M-75	25mm	164g [0.36 lb]

TPA 90° Base Clamp

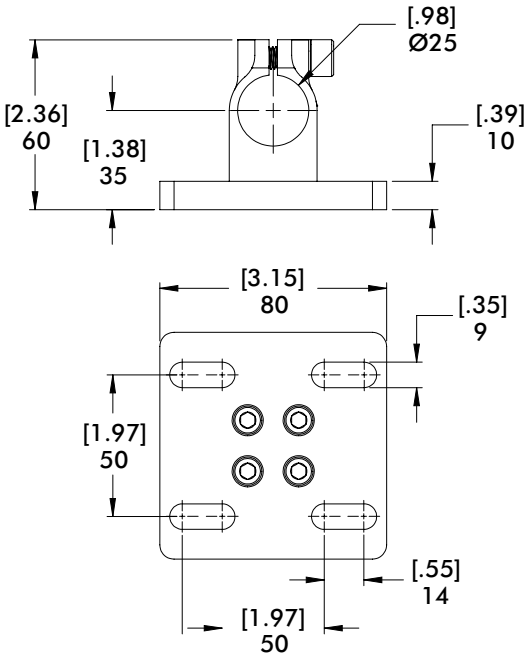



Material: High Strength Aluminum

Model Number	Weight
TPA-G-25-35-A	258g [0.57 lb]

TPA Flange Extension

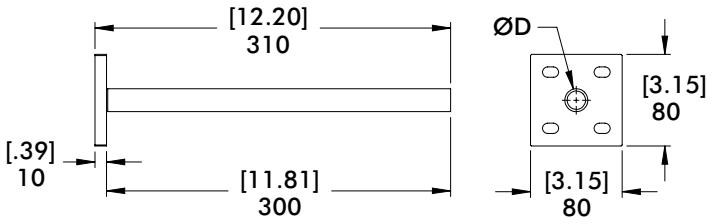



Material: Steel

Model Number	ØD	Weight
TPA-00-20-300-GD	20mm	736g [1.62 lb]
TPA-00-25-300-GD	25mm	810g [1.79 lb]
TPA-00-30-300-GD	30mm	884g [1.95 lb]

TPA, TBS SERIES

Accelerate® Tooling Collection | Dimensions

TPA 90° Slotted Flange Extension



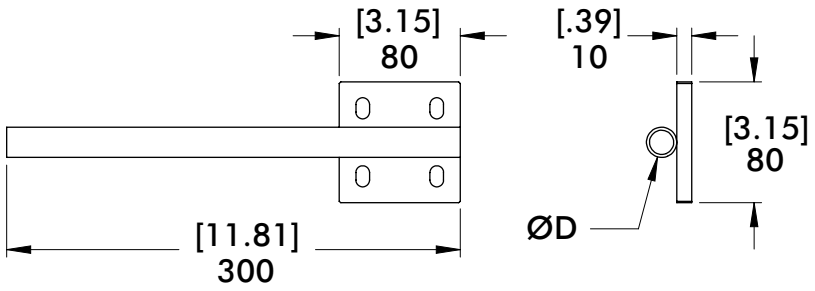

Material: Steel

Model Number	ØD	Weight
TPA-90-20-300-GD	20mm	736g [1.62 lb]
TPA-90-25-300-GD	25mm	810g [1.79 lb]
TPA-90-30-300-GD	30mm	884g [1.95 lb]

TPA 90° Slotted Flange Extension



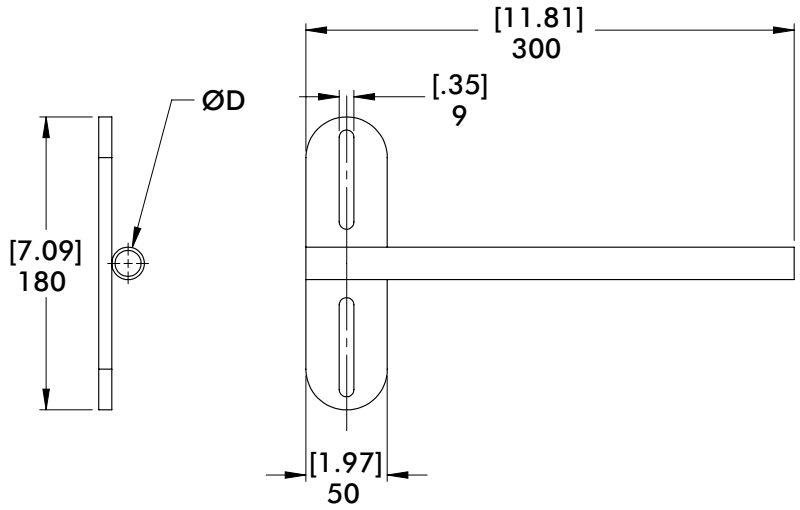

Material: Steel

Model Number	ØD	Weight
TPA-90-20-300	20mm	733g [1.62 lb]
TPA-90-25-300	25mm	807g [1.78 lb]
TPA-90-30-300	30mm	881g [1.94 lb]

TBS Ball Extension

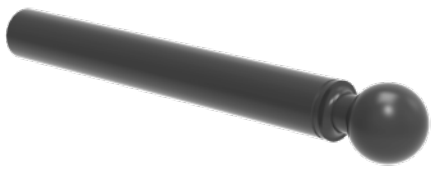

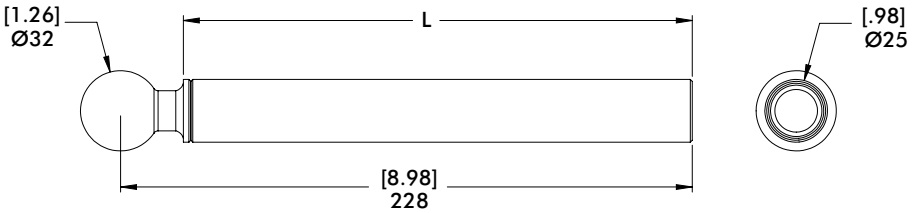

Material: Steel

Model Number	L	Weight
TBS-32B-25M-200-A	[7.87] 200	[0.75 lb] 339g
TBS-32B-25M-300-A	[11.81] 300	[1.43 lb] 648g

Dimensions and technical information are subject to change without notice

TPB, 1T SERIES

Accelerate® Tooling Collection | Dimensions

TPB - Transfer Press Bayonent

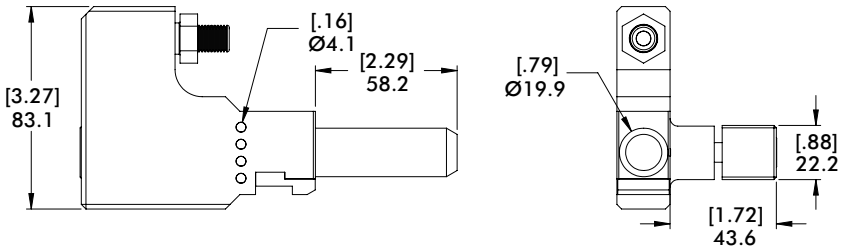

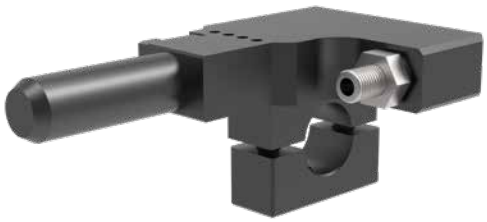

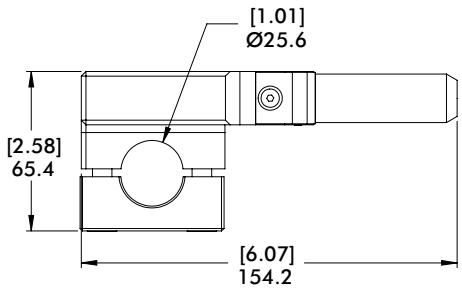

Material: Steel

Model Number	Weight
CPI-TPB-HYU-10-1A-ST	734g [1.62 lb]

1T - One Touch Finger Tool 25mm

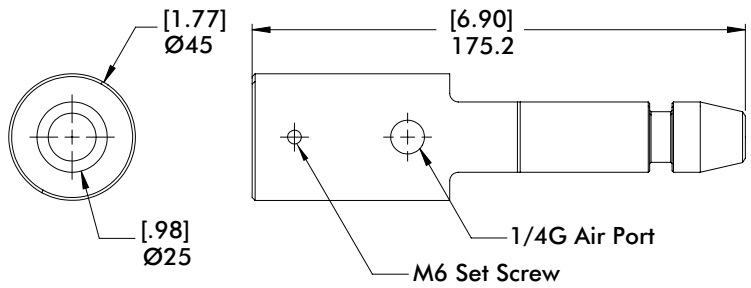



Model Number	Material	Weight
CPI-1T-25F	Steel	1.05kg [2.31 lb]
CPI-1T-25F-A	Aluminum	0.36kg [0.79 lb]

1T - One Touch Finger Tool 40mm

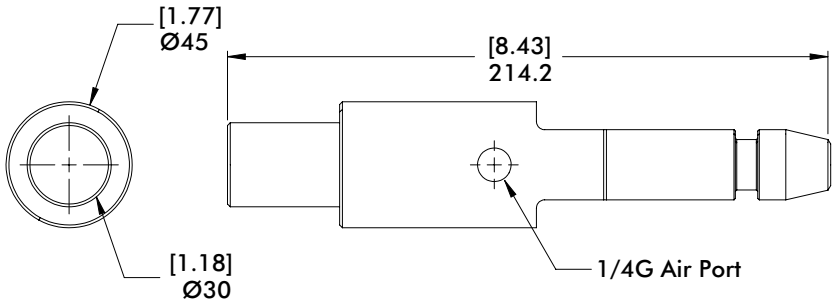



Model Number	Material	Weight
CPI-1T-33M	Steel	1.42kg [3.13 lb]
CPI-1T-33M-A	Aluminum	0.49kg [1.08 lb]

LPT SERIES

Accelerate® Tooling Collection | Dimensions

LTP Double T-Clamp



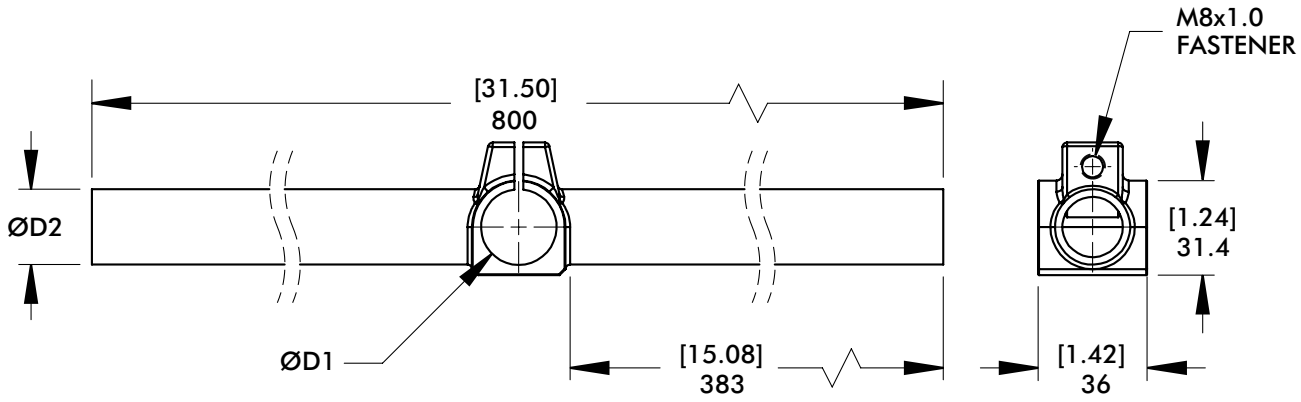

Material: Steel

Model Number	ØD1	ØD2	Weight
TCA-20M-20MD-400-A	20mm	20mm	974.7g [2.15 lb]
TCA-25M-20MD-400-A	25mm	20mm	1001.8g [2.21 lb]
TCA-25M-25MD-400-A	25mm	25mm	1245.3g [2.75 lb]
TCA-30M-30MD-400-A	30mm	30mm	1546.6g [3.41 lb]

LTP Frame



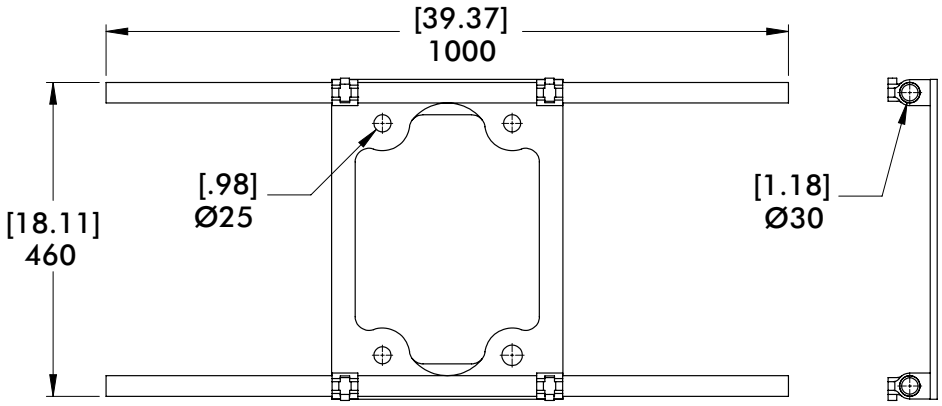

Model Number	Weight
LTP-30M-25-30-1000-A	3939g [8.68 lb]

LTP Pin

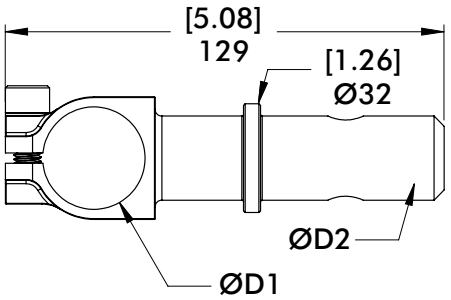

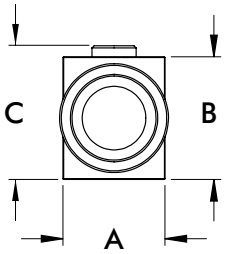

LTP-90-25-20-S
LTP-90-25-25-S
LTP-90-30-20-A
LTP-90-30-25-A



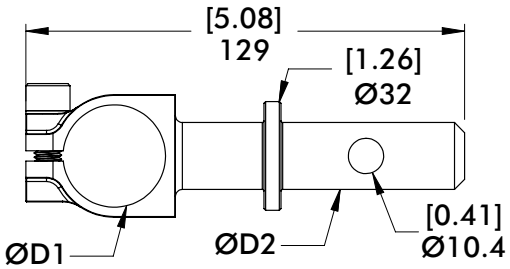

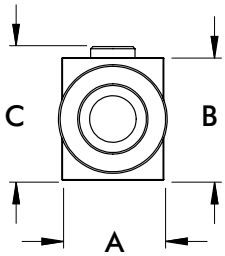

LTP-00-30-20-A
LTP-00-30-25-A

Material: Steel

Model Number	ØD1	ØD2	A	B	C	Weight
LTP-90-25-20-S	25mm	20mm	31 [1.22]	31 [1.22]	37.2 [1.46]	370g [0.82 lb]
LTP-90-25-25-S		25mm				470g [1.04 lb]
LTP-90-30-20-S	30mm	20mm	30 [1.18]	36 [1.42]	39.65 [1.56]	350g [0.77 lb]
LTP-90-30-25-S		25mm				460g [1.01 lb]
LTP-00-30-20-S		20mm				350g [0.77 lb]
LTP-00-30-25-S		25mm				460g [1.01 lb]

CP, SGM SERIES

Accelerate® Tooling Collection | Lower Nest Tooling Example

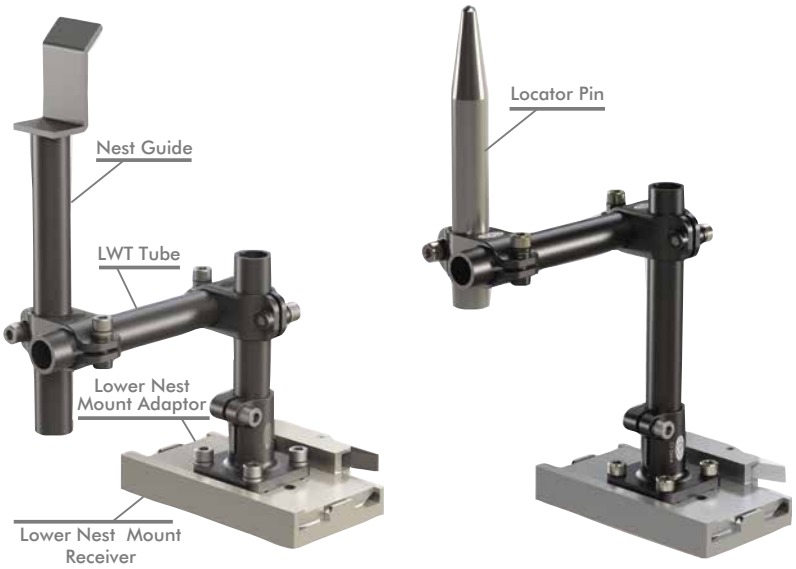

CP Center Pin

Ø20/Ø25, 200mm Length

Model Number	ØD	Weight
CP-20-200	20	427g [0.94 lb]
CP-25-200	25	640g [1.41 lb]



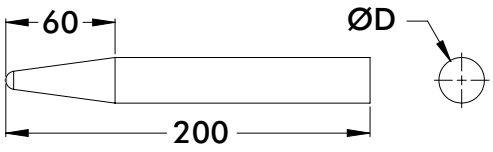

Material: Steel

SGM Mount Receiver



Model Number	Material	Weight
CPI-SGM-TH-USR-AL	Aluminum	670g [1.48 lb]
CPI-SGM-TH-USR	Steel	1730g [3.81 lb]

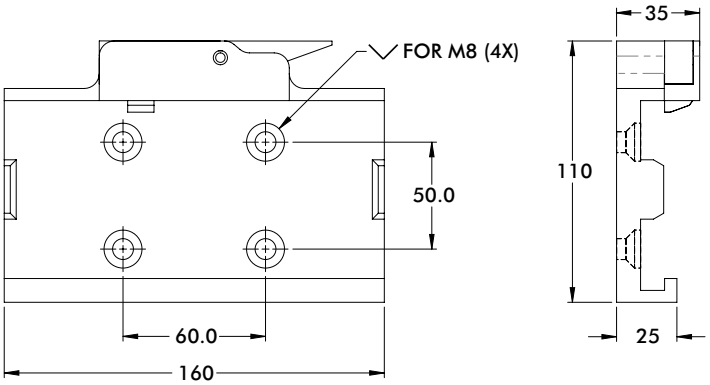

SGM Mount Adaptor



Model Number	Material	Weight
CPI-SGM-TH-USA-AL	Aluminum	287g [0.63 lb]
CPI-SGM-TH-USA	Steel	839g [1.85 lb]

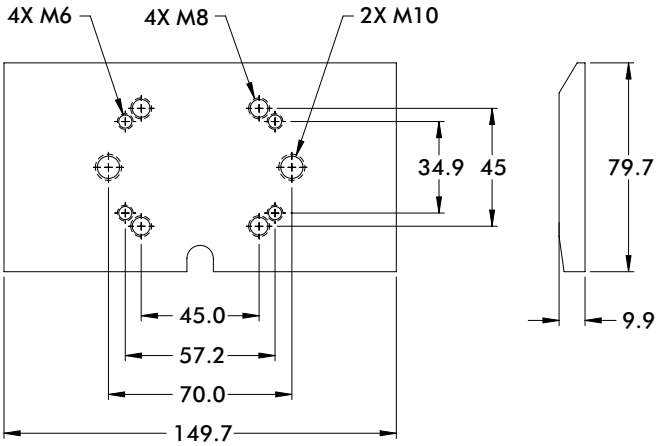

Dimensions and technical information are subject to change without notice

GTS, NPG SERIES

Accelerate® Tooling Collection | Dimensions

GTS Shovel with Welded Post



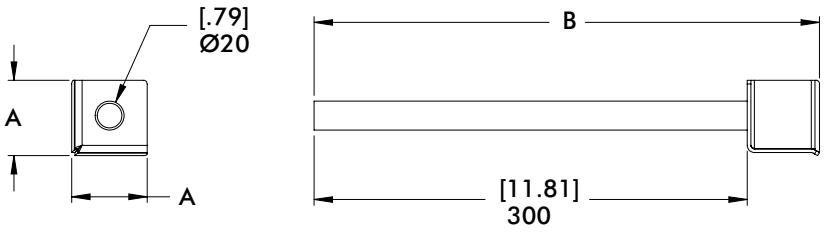

Material: Steel

Model Number	A	B	ØD	Weight
GTS-40-40-40-20M-A	42.2 [1.66]	340 [13.39]	Ø20 [0.79]	290g [0.64 lb]
GTS-40-40-40-30M-A	42.2 [1.66]	340 [13.39]	Ø30 [1.18]	400g [0.88 lb]
GTS-50-50-50-20M-A	52.2 [2.05]	350 [13.78]	Ø20 [0.79]	341g [0.75 lb]
GTS-50-50-50-30M-A	52.2 [2.05]	350 [13.78]	Ø30 [1.18]	451g [0.99 lb]

NPG Nest Guide



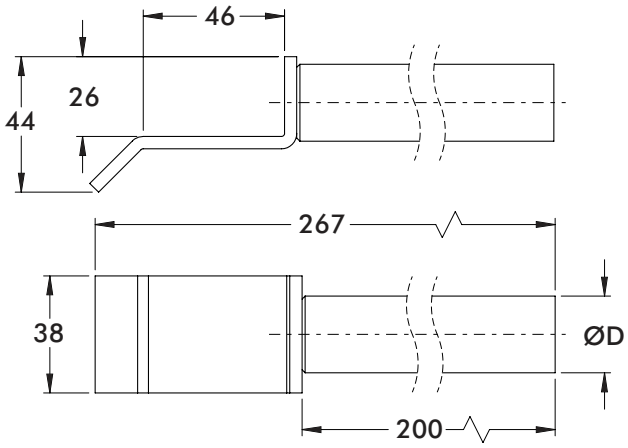

Material: Steel

Ø20/Ø25, 200mm Length

Model Number	ØD	Weight
NPG-25-200	25	432g [0.95 lb]
NPG-20-200	20	365g [0.80 lb]

GT SERIES

Accelerate® Tooling Collection | Dimensions

GT-BGA 32mm Ball Gripper Mount



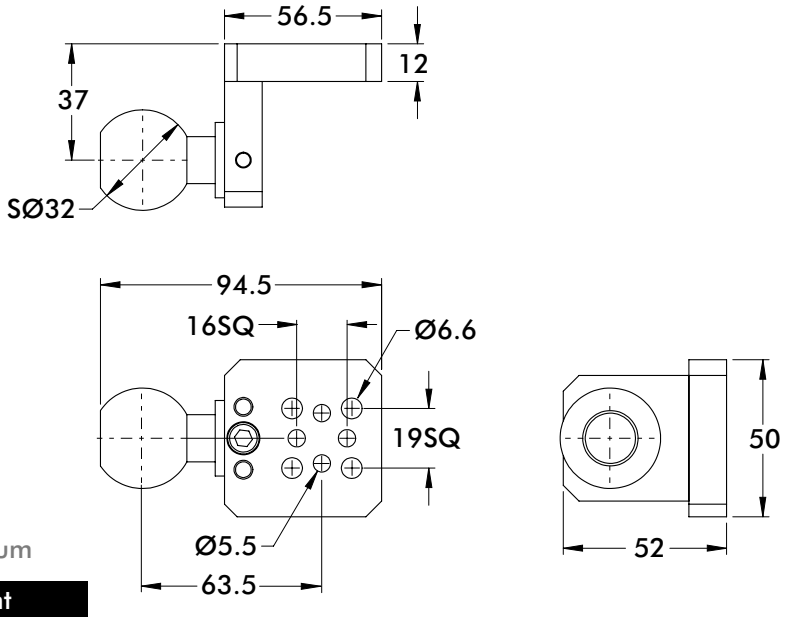

Material: High Strength Aluminum

Model Number	Weight
GT-BGA-A	174g [0.38 lb]

GT-BGA Paddle Gripper Mount

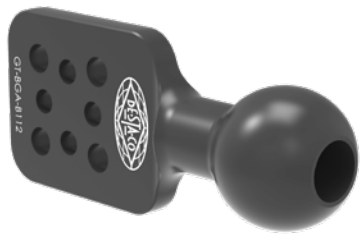

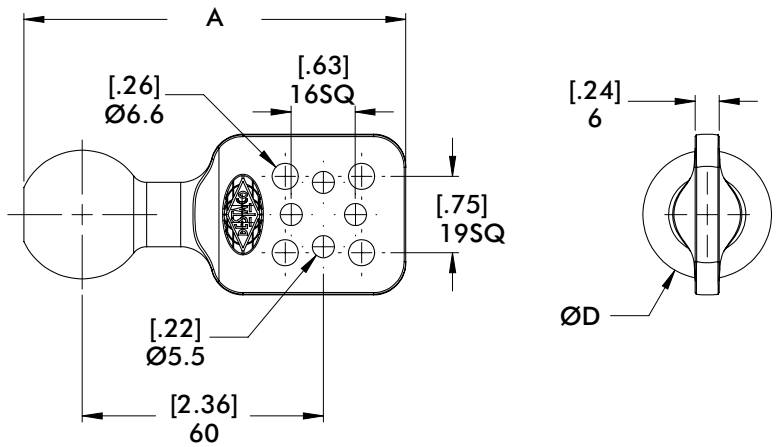

Material: High Strength Aluminum

Model Number	ØD	A	Weight
GT-BGA-B112	28.6 [1.12]	93 [3.66]	66g [0.15 lb]
GT-BGA-32B	32 [1.26]	95 [3.74]	79g [0.17 lb]

Dimensions and technical information are subject to change without notice

GT-UGA Side Mount Extension

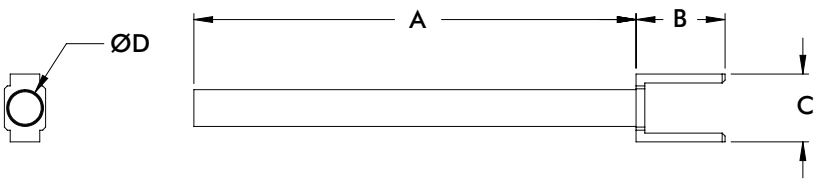



Material: Steel

Model Number	A	B	C	ØD	Weight
GT-UGA-84A2-20M-400-A	400 [15.74]	60.5 [2.38]	46 [1.81]	20 [0.79]	425g [0.94 lb]
GT-UGA-84A2-25M-300-A	300 [11.81]	60.5 [2.38]	46 [1.81]	25 [0.98]	412g [0.91 lb]
GT-UGA-84A2-30M-400-A	400 [15.74]	60.5 [2.38]	46 [1.81]	30 [1.18]	582g [1.28 lb]
GT-UGA-84A3-20M-400-A	400 [15.74]	51 [2.01]	58 [2.28]	20 [0.79]	475g [1.05 lb]
GT-UGA-84A3-25M-300-A	300 [11.81]	51 [2.01]	58 [2.28]	25 [0.98]	462g [1.02 lb]
GT-UGA-84A3-30M-400-A	400 [15.74]	51 [2.01]	58 [2.28]	30 [1.18]	631g [1.39 lb]

GT-UGA Angled Side Mount Extension

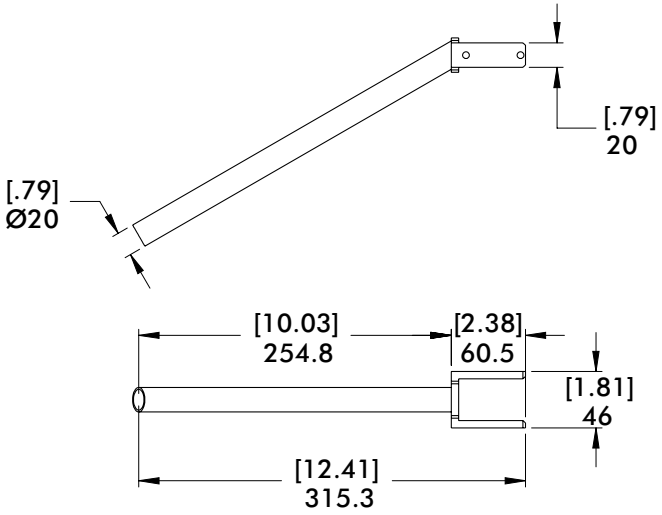



Material: Steel

Model Number	Weight
GT-UGA-84A2-20M-300-30-A	353g [0.78 lb]

GT-UGA Side Mount Clamp

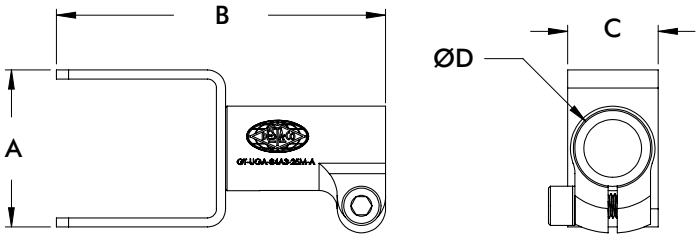



Material: Steel

Model Number	A	B	C	D	Weight
GT-UGA-84A2-20M-A	40 [1.57]	116 [4.57]	20 [0.79]	20 [0.79]	165g [0.36 lb]
GT-UGA-84A2-25M-A	40 [1.57]	116 [4.57]	20 [0.79]	25 [0.98]	184g [0.41 lb]
GT-UGA-84A2-30M-A	40 [1.57]	116 [4.57]	20 [0.79]	30 [1.18]	200g [0.44 lb]
GT-UGA-84A3-20M-A	52 [2.05]	109 [4.29]	30 [1.18]	20 [0.79]	194g [0.43 lb]
GT-UGA-84A3-25M-A	52 [2.05]	109 [4.29]	30 [1.18]	25 [0.98]	213g [0.47 lb]
GT-UGA-84A3-30M-A	52 [2.05]	109 [4.29]	30 [1.18]	30 [1.18]	228g [0.50 lb]

GT-OPS, SAP SERIES

Accelerate® Tooling Collection | Dimensions

GT-OPS Jaw Sensor Mount



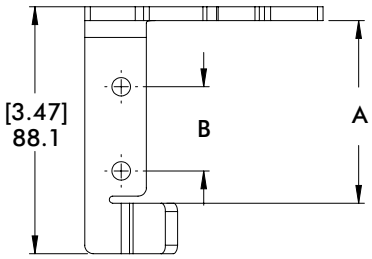

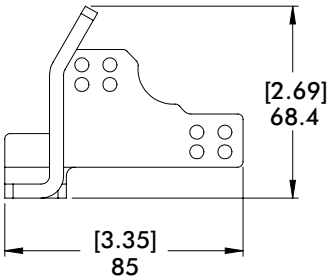

Material: Steel

Model Number	A	B	Weight
GT-OPS-84A2-LH-A	63.5 [2.50]	17.5 [0.69]	171g [0.38 lb]
GT-OPS-84A2-RH-A	63.5 [2.50]	17.5 [0.69]	171g [0.38 lb]
GT-OPS-84A3-LH-A	65.1 [2.56]	30 [1.18]	192g [0.42 lb]
GT-OPS-84A3-RH-A	65.1 [2.56	30 [1.18]	192g [0.42 lb]

SAP Sensor Clamp Mount



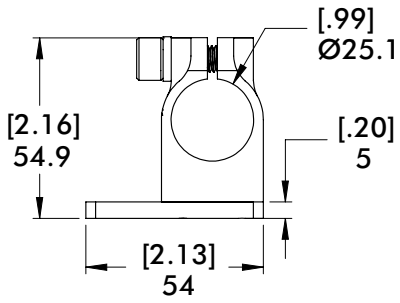

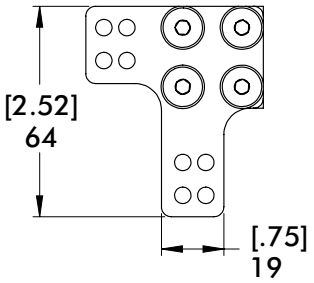

Material: High Strength Aluminum

Model Number	Weight
SAP-OPS-25M-A	120g [0.26 lb]

SAP Sensor Extension Mount



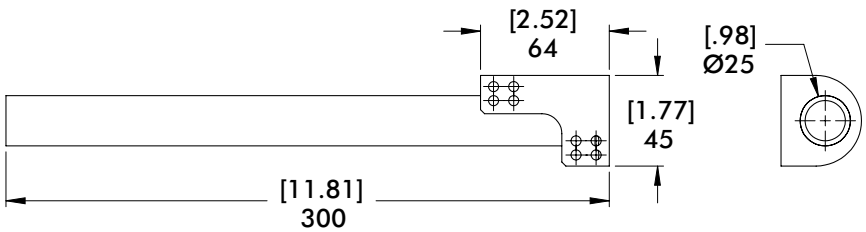

Material: Steel

Model Number	Weight
SAP-OPS-25M-300-LH-A	515g [1.14 lb]
SAP-OPS-25M-300-RH-A	515g [1.14 lb]

Dimensions and technical information are subject to change without notice

GTS-100 32mm Ball 80mm Shovel

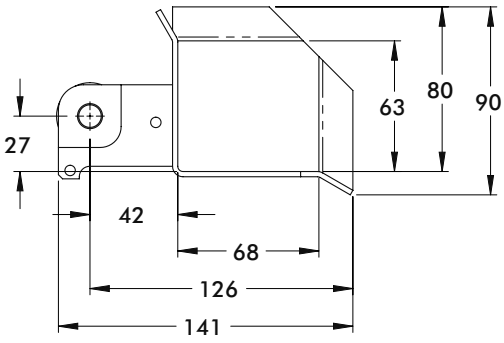

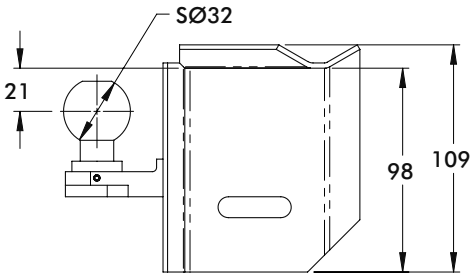



Optional spare parts

28.58mm Ball

GTS-WB-B112-L

GTS-WB-B112-R

32mm Ball

GTS-WB-32B-L

GTS-WB-32B-R



(Left Hand)



(Right Hand)

Material: Steel

Model Number	Weight
GTS-100-85-80LH-A GTS-100-85-80RH-A	656g [1.45 lb]

GTS-100 32mm Ball 100mm Shovel

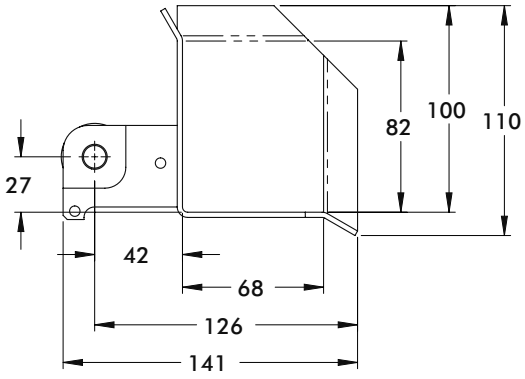

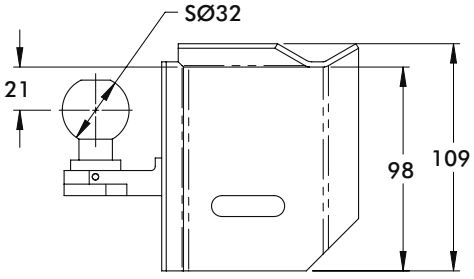



(Left Hand)



(Right Hand)

Material: Steel

Model Number	Weight
GTS-100-85-100LH-A GTS-100-85-100RH-A	730g [1.61 lb]

AB, SAP SERIES

Accelerate® Tooling Collection | Technical Specifications | Dimensions

AB Block Style Proximity Switch Mounts



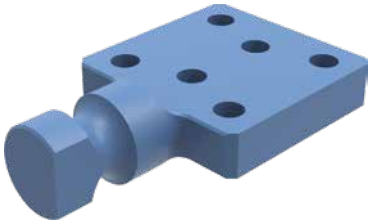

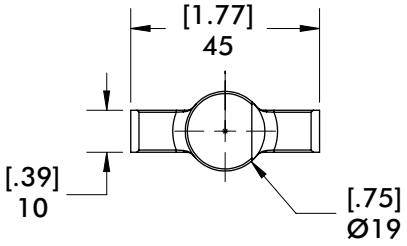

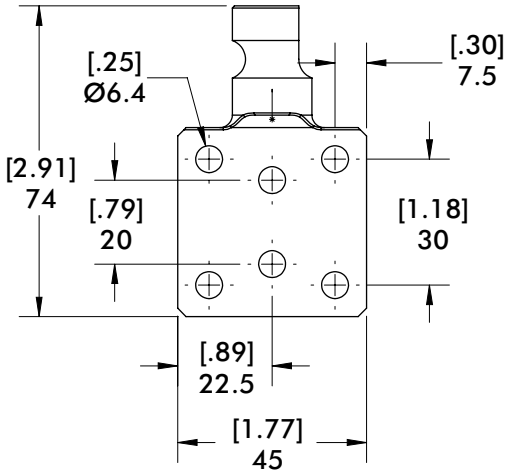

Material: Nylon

Model Number	Weight
CPI-AB-750-EF-BP	31.2g [1.1oz]

(2) screws & (2) locking flange nuts included

SAP Barrel Style Proximity Switch Mounts

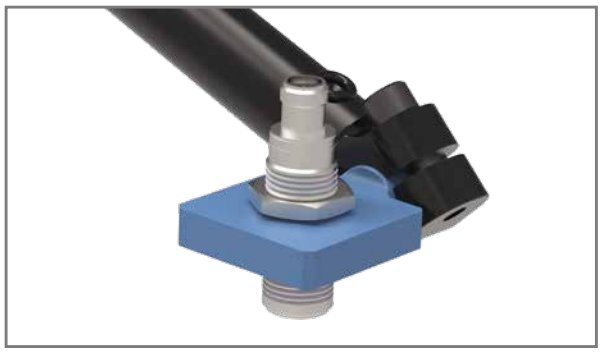

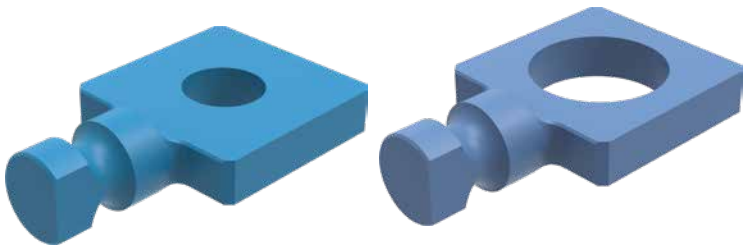

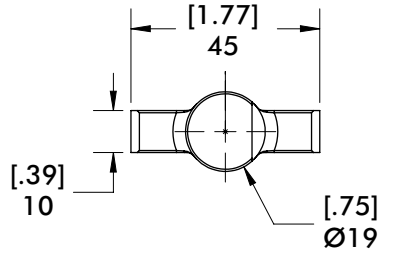

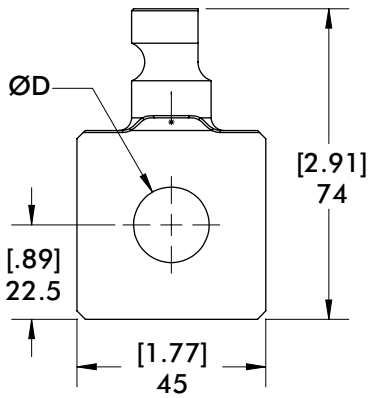

Material: Nylon

Model Number	(Ø)"D"	Weight
CPI-SAP-18-BP	[0.71] 18	28.3g [1.0oz]
CPI-SAP-30-BP	[1.18] 30	22.7g [0.8oz]

Dimensions and technical information are subject to change without notice

Notes

ROUND TOOLING SYSTEMS

Table of Contents


Introduction 3

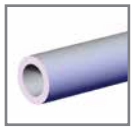
World Tool Booms and Bushings 7

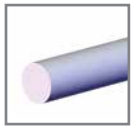
Tubes and Rods 8


Single Mushroom Tool Holder 10


Double Mushroom Tool Holder 11


Wrist Rotate Assembly 12


Flange End Mount Bracket and Blocks 13

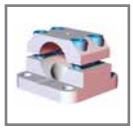
Flange Mid Mount Brackets and Blocks 16

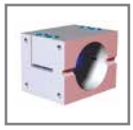
World Tool Direct Mounts 19


Base Mount Block 21


Cross Transition Brackets and Blocks 22


T-Clamp Transition Brackets and Blocks 27


Wrist Brackets and Blocks 31

Dimensions and technical information are subject to change without notice

ROUND TOOLING SYSTEMS

Table of Contents


Low-Profile Wrist Brackets and Blocks 33


Elbow and Straight Transition Brackets 34


Swivel Arms 36

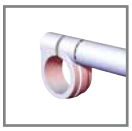
Single End Extensions 57


Nest Pad Brackets 59


Proximity Switch Mount 63


Proximity Switch Bumpers 64

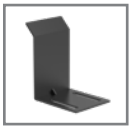
Nest Pad Guides 65


Nest Pad Blocks 67


Plastics - Blue Slice 69


Tool Storage 70

ROUND TOOLING SYSTEMS

World Tool System Example with Accelerate® Lightweight Tooling Components

DESTACO's world tool components are configured to handle parts of any size and shape, and can be re-used for future applications.

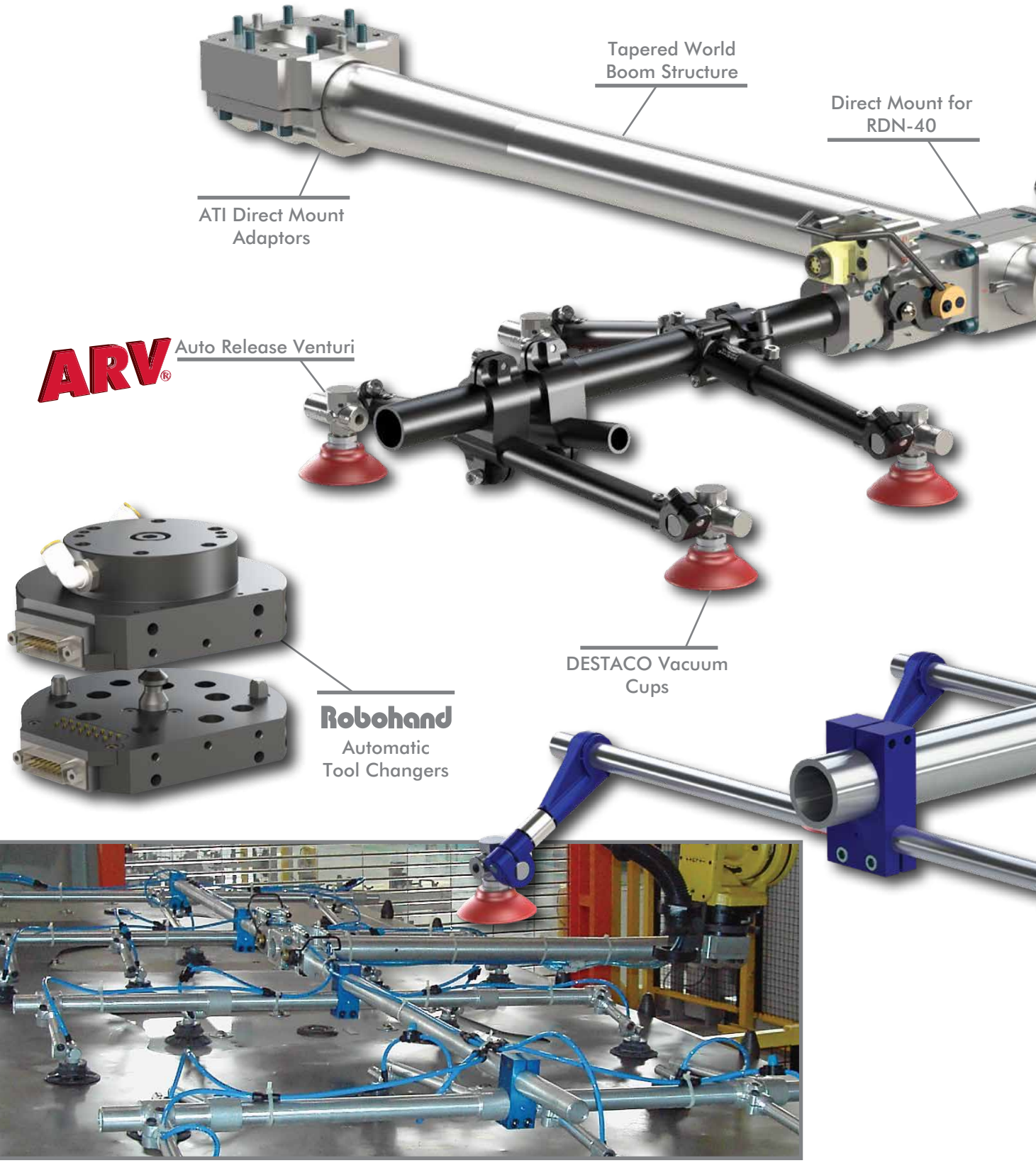

Dimensions and technical information are subject to change without notice

ROUND TOOLING SYSTEMS

Traditional Round Tooling System Example

Round tooling components are used in combination with the Accelerate® Collection for lightweight tooling solutions

ACCELERATE® COLLECTION

Most commonly used in:	
Applications	**Markets**
Load/Unload	Automotive
Pick and Place	Industrial
Material Handling	Appliance
Hot Forming	Plastics



40mm/1.50" Quick Disconnect

40mm/1.50" Receiver with Air and Electric Connection

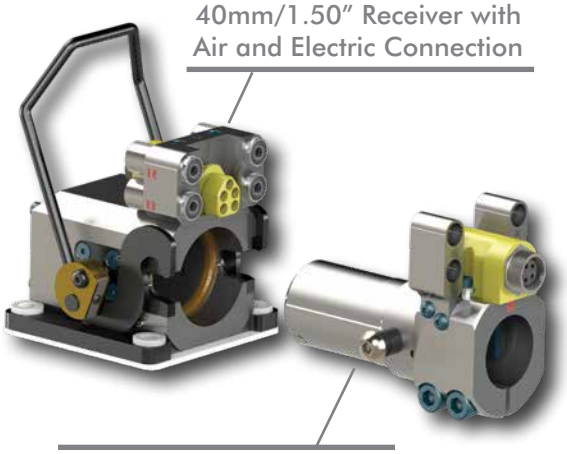

40mm/1.50" Receiver with Air and Electric Connection

60mm/2.50" Quick Disconnect with Electric Connection

M-Block Cross Transition Blocks

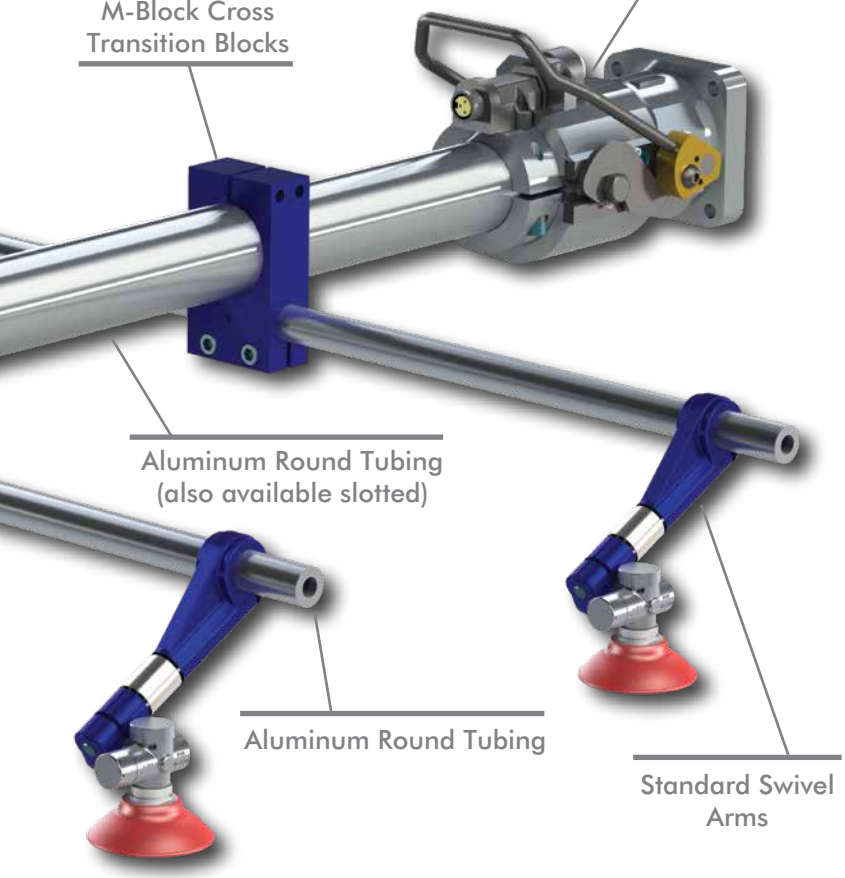

Aluminum Round Tubing (also available slotted)

Aluminum Round Tubing

Standard Swivel Arms

Hot Forming Solutions



ROUND TOOLING SYSTEMS

Micro Round Tooling System Example

A family within the traditional round tooling system, **micro tooling components** are made from lightweight aluminum with thin wall tubing. This system is designed to handle small, lightweight parts, plastic injection mold unloading, and unusual shaped objects.

Flexible Mounting
For any type of robot

Unlimited configuration possibilities with the use of **DESTACO** products, such as vacuum cups and generators, as well as **Robohand** grippers, rotates, and linear slides.

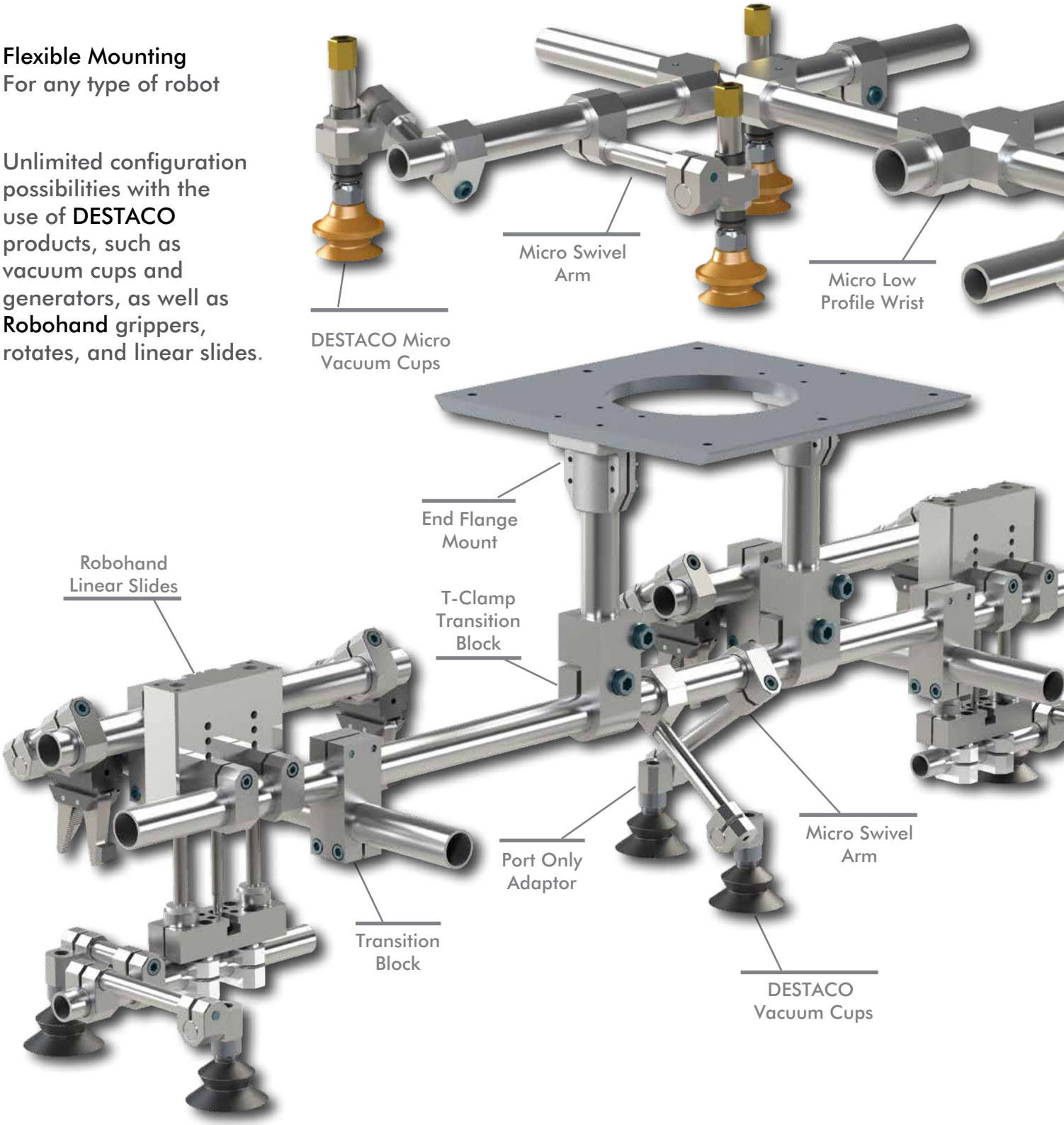

Dimensions and technical information are subject to change without notice

ROUND TOOLING SYSTEMS

Micro Round Tooling System Example



Most commonly used in:	
Applications	**Markets**
Pick and Place	Medical
Material Handling	Industrial
Plastic Injection	Consumer
Vision/Testing	Food and Packaging



The micro tooling system can be used with DESTACO's award winning, world's first electric vacuum cup.

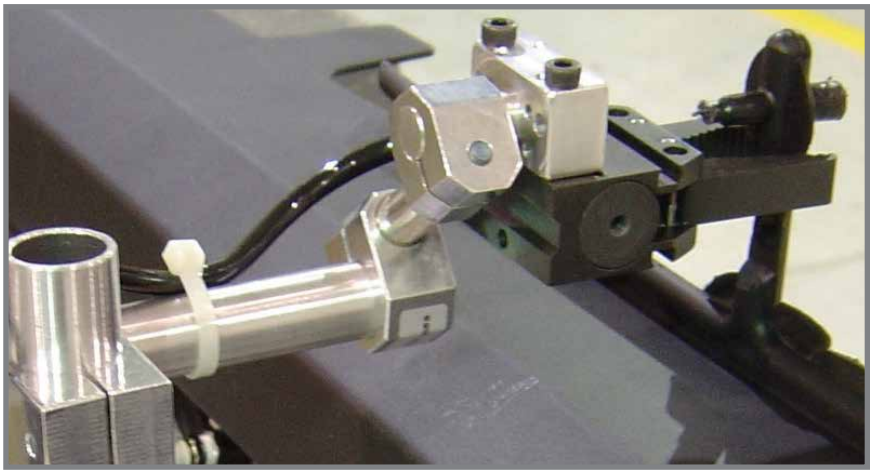

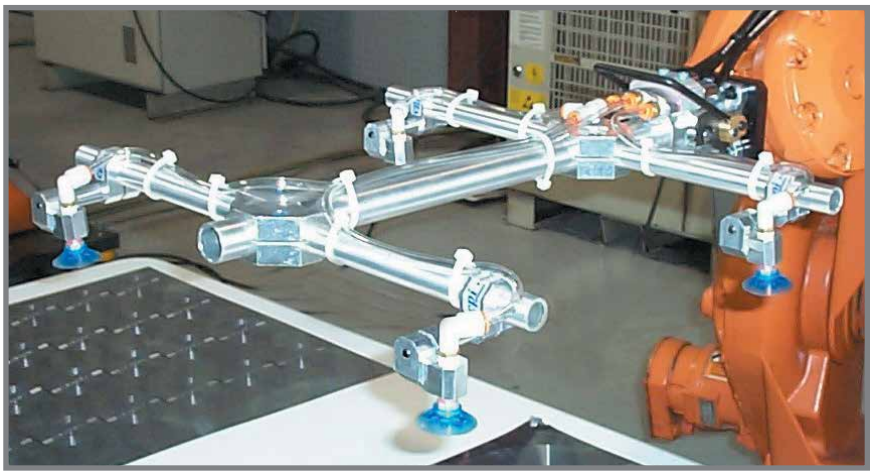

Micro round tooling systems can be permanently mounted to the robot with a direct mount or with manual or automatic tool changers. Optional quick disconnect air ports provides a simple connection point for air supply when changing between different tooling configurations.

WORLD TOOL BOOMS

Round Tooling | Dimensions | Technical Specifications

PAT Ø3.00" Tapered Aluminum Main Booms

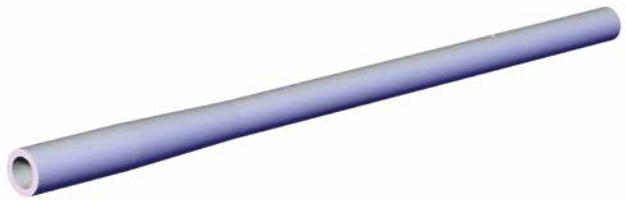

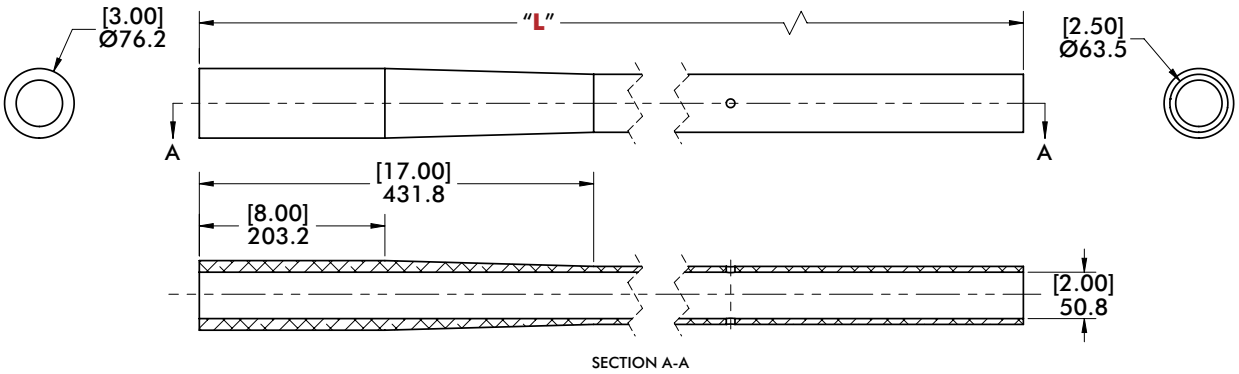

Model	"L"	Weight
CPI-PAT-30TP-**0M-1600**	[62.99] 1600.0	[13.43 lb] 6.09 kg
CPI-PAT-30TP-**0M-30**	[30.00] 762.0	[7.91 lb] 3.59 kg
CPI-PAT-30TP-**0M-34**	[34.00] 863.6	[8.58 lb] 3.89 kg
CPI-PAT-30TP-**0M-36**	[36.00] 914.4	[8.91 lb] 4.04 kg
CPI-PAT-30TP-**0M-60**	[60.00] 1524.0	[12.95 lb] 5.87 kg

Model	"L"	Weight
CPI-PAT-30TP-**1M-55**	[55.00] 1397.0	[12.08 lb] 5.48 kg
CPI-PAT-30TP-**1M-60**	[60.00] 1524.0	[12.95 lb] 5.87 kg
CPI-PAT-30TP-**1M-64**	[64.00] 1625.6	[13.60 lb] 6.17 kg
CPI-PAT-30TP-**2M-55**	[55.00] 1397.0	[12.08 lb] 5.48 kg

WTTB World Tool Bayonet Boom

Material: Aluminum

Part Number	ØD	A	Weight
CPI-WTTB-RDC-A6-EL10-60-2000	60mm	2000mm	9.3kg [20.50 lb]
CPI-WTTB-RDC-A6-EL10-25-64	2.5 in	64 in	8.0kg [17.60 lb]



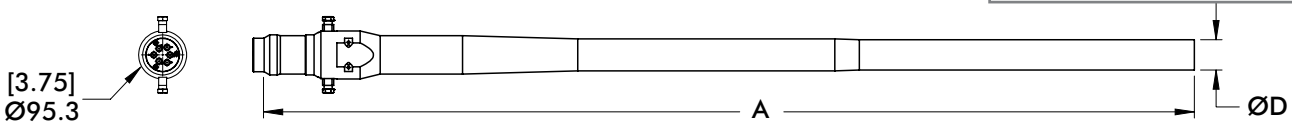

CB Aluminum Bushing

For use in cooperation with Clamp Blocks.

Model	(Ø)"O.D."	(Ø)"I.D."	Weight
CPI-CB-**15-10**	**1.50"**(in)	**1.00"**(in)	[.76 lb] .34 kg
CPI-CB-**20-15**	**2.00"**(in)	**1.50"**(in)	[.81 lb] .37 kg
CPI-CB-**25-20**	**2.50"**(in)	**2.00"**(in)	[.81 lb] .37 kg

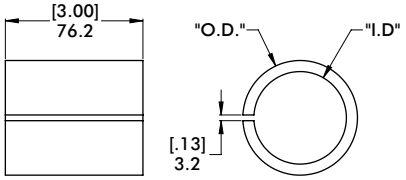



Dimensions and technical information are subject to change without notice

BT1 Slotted Aluminum Boom/Tubing

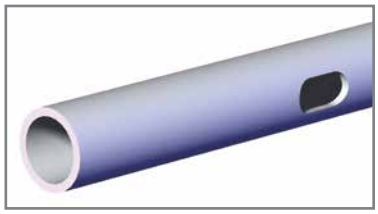

"**L**" = Specify Length

in 6.00" or 150mm Increments

English Example:
*CPI-BTI-150-7S-**06** (6.00")*

Metric Example:
*CPI-BTI-150-7S-**150** (150mm)*

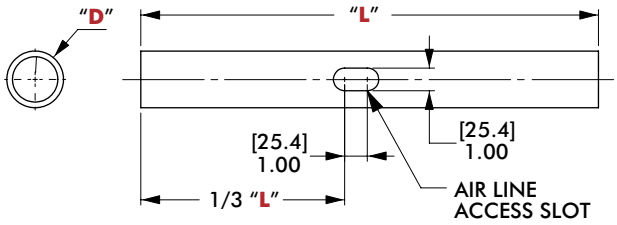

Model	(Ø) "D"	Wall Thickness	Weight	Linear Deflection	Torsional Twist
CPI-BT1-**150-7S**-"**L**"	**1.50"**(in)	[0.25"] 6.35mm	[1.2 lb/ft] 1.8 kg/m	5.6mm [0.22"] @ 100lb/24.00"	.3.1° @ 300ft-lbs
CPI-BT1-**250-9S**-"**L**"	**2.50"**(in)	[0.25"] 6.35mm	[2.1 lb/ft] 3.1 kg/m	12.7mm [0.50"] @ 150lb/48.00"	2.3° @ 600ft-lbs
CPI-BT1-**2538-9S**-"**L**"	**2.50"**(in)	[0.375"] 9.53mm	[2.9 lb/ft] 4.3 kg/m	10.2mm [0.40"] @ 150lb/48.00"	1.8° @ 600ft-lbs
CPI-BT1-**60-9S**-"**L**" (Metric)	**60mm**	[0.20"] 5mm	[1.6 lb/ft] 2.4 kg/m	17.8mm [0.70"] @ 150lb/48.00"	3.3° @ 600ft-lbs

PAT Aluminum Tubing

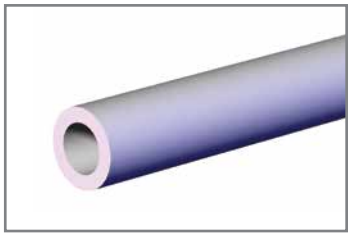

"**L**" = Specify Length

in 6.00" or 150mm Increments

English Example:
*CPI-PAT-15-**06** (6.00")*

Metric Example:
*CPI-PAT-40-**150** (150mm)*

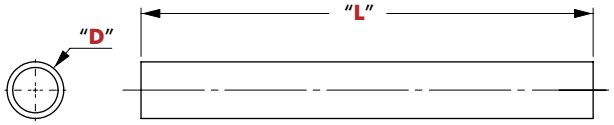

Model	(Ø) "D"	Wall Thickness	Weight	Linear Deflection	Torsional Twist
CPI-PAT-**12**-"**L**"	**1.25"**(in)	[0.25"] 6.35mm	[0.9 lb/ft] 1.37kg/m	3.3mm [0.13"] @ 75lb/18.00"	1.6° @ 100ft-lbs
CPI-PAT-**15**-"**L**"	**1.50"**(in)	[0.25"] 6.35mm	[1.2 lb/ft] 1.8 kg/m	5.6mm [0.22"] @ 100lb/24.00"	.3.1° @ 300ft-lbs
CPI-PAT-**40**-"**L**" (Metric)	**40mm**	[0.20"] 5mm	[1.2 lb/ft] 1.8 kg/m	5.6mm [0.22"] @ 100lb/24.00"	3.2° @ 300ft-lbs
CPI-PAT-**25**-"**L**"	**2.50"**(in)	[0.25"] 6.35mm	[2.1 lb/ft] 3.1 kg/m	12.7mm [0.50"] @ 150lb/48.00"	2.3° @ 600ft-lbs
CPI-PAT-**60**-"**L**" (Metric)	**60mm**	[0.20"] 5mm	[1.6 lb/ft] 2.4 kg/m	17.8mm [0.70"] @ 150lb/48.00"	3.3° @ 600ft-lbs
CPI-PAT-**2538**-"**L**"	**2.50"**(in)	[0.375"] 9.53mm	[2.9 lb/ft] 4.3 kg/m	10.2mm [0.40"] @ 150lb/48.00"	1.8° @ 600ft-lbs

TUBING, RODS AND BUSHINGS

Round Tooling | Dimensions | Technical Specifications

PAT Thin Wall Aluminum Tubing

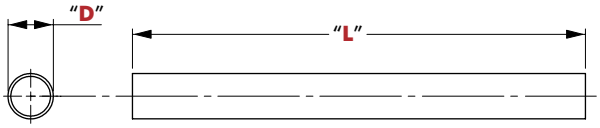



Model	(Ø)"O.D."	Wall Thickness	Weight
CPI-PAT-**50T**-"L"	**0.50"**(in)	[0.085"] 2.16mm	[0.13 lb/ft] 193.0 g/m
CPI-PAT-**75T**-"L"	**0.75"**(in)	[0.085"] 2.16mm	[0.20 lb/ft] 309.3 g/m
CPI-PAT-**10T**-"L"	**1.00"**(in)	[0.085"] 2.16mm	[0.28 lb/ft] 425.6 g/m

"L" = Specify Length

Standard Lengths
04 (4.00")
06 (6.00")
08 (8.00")
10 (10.00")
12 (12.00")
24 (24.00")
36 (36.00")

PAB Aluminum Rods

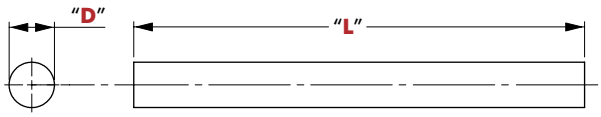

"L" = Specify Length

in 6.00" or 150mm Increments

English Example:
CPI-PAB-10-06 (6.00")

Metric Example:
CPI-PAB-25-150 (150mm)

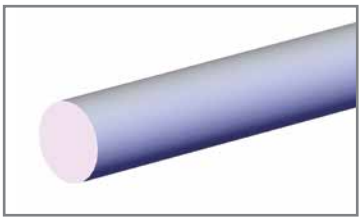

Model	(Ø) "D"	Wall Thickness	Weight	Linear Deflection	Torsional Twist
CPI-PAB-**10**-"L"	**1.00"**(in)	SOLID BAR	[0.9 lb/ft] 1.4 kg/m	1.52mm [0.06"] @ 50lb/12.00"	.002° @ 100ft-lb
CPI-PAB-**25**-"L" (Metric)	**25.0mm**	SOLID BAR	[0.9 lb/ft] 1.4 kg/m	1.52mm [0.06"] @ 50lb/12.00"	.002° @ 100ft-lb

PST Steel Tubing



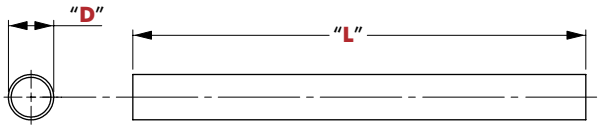

(L) = Specify Length

PST-10: 150, 200, 225, 250, 275, 300 [mm] *(CPI-PST-10-150)*
PST-1212: 6, 8, 10, 12, 14, 16, 18 [in] *(CPI-PST-1212-6)*
M1512: 125, 160, 300, 350, 350, 600, 900 [mm] *(M1512-150)*

Model	(Ø) "D"	Wall Thickness	Weight	Linear Deflection	Torsional Twist
CPI-PST-**10**-"L"	**1.00"**(in)	3.18mm [0.125"]	1.8 kg/m [1.2 lb/ft]	0.9mm [0.003"] @ 50lb/12.00"	.001° @ 100ft-lb
CPI-PST-**1212**-"L"	**1.25"**(in)	3.18mm [0.125"]	2.2 kg/m [1.5 lb/ft]	0.3mm [0.001"] @ 50lb/12.00"	.001° @ 100ft-lb

Model	(Ø)"O.D."	Wall Thickness	Weight
M1512-"L"	**1.00"**(in)	3.0mm [0.12"]	1.5 kg/m [1.03 lb/ft]

Dimensions and technical information are subject to change without notice

SINGLE MUSHROOM TOOL HOLDER

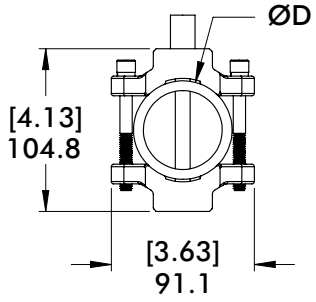

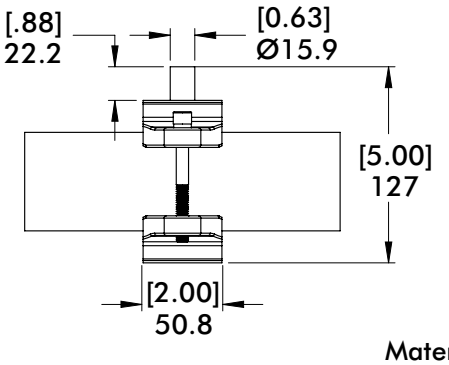

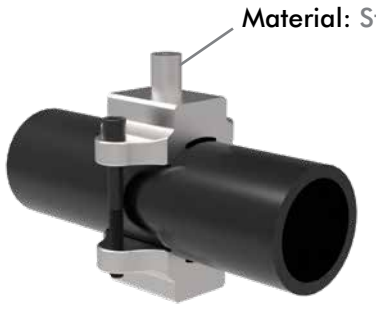

Material: Aluminum

Model Number	ØD	Weight
CPI-THM-250-POST	2.5 in	499g [1.10 lb]
CPI-THM-60-POST	60mm	499g [1.10 lb]

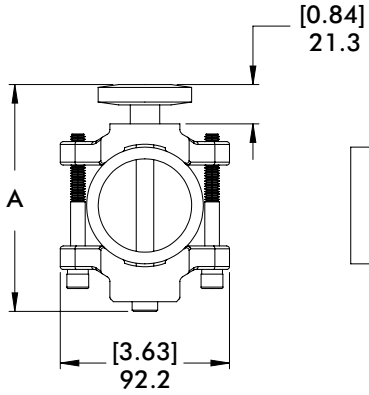

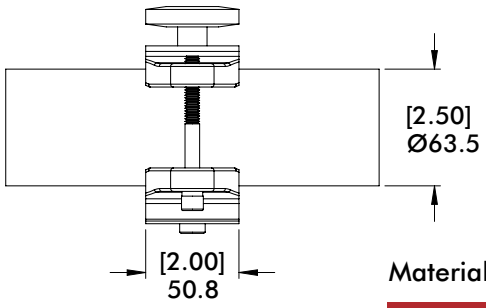

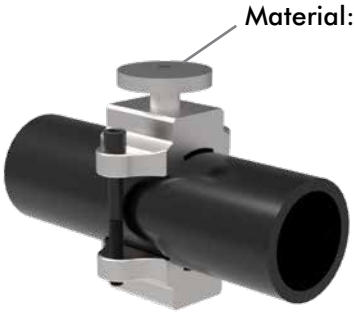

Material: Aluminum

Model Number	A	Weight
CPI-THM-250	122.7 [4.83]	635g [1.40 lb]
CPI-THM-250-WTTB	127 [5.00]	590g [1.30 lb]

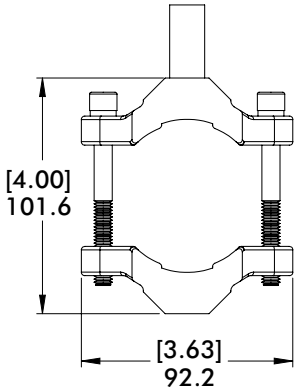

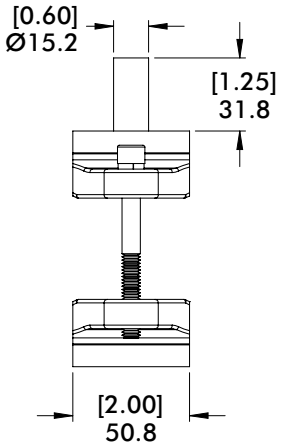



Material: Aluminum

Model Number	Weight
CPI-THM-250-SVP	408g [0.90 lb]

DOUBLE MUSHROOM TOOL HOLDER

Round Tooling | Dimensions

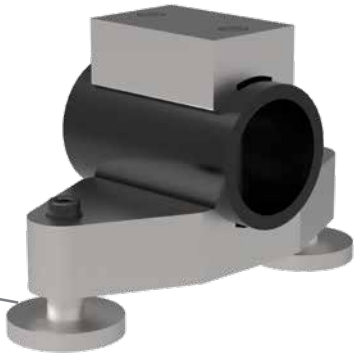

Material: Steel

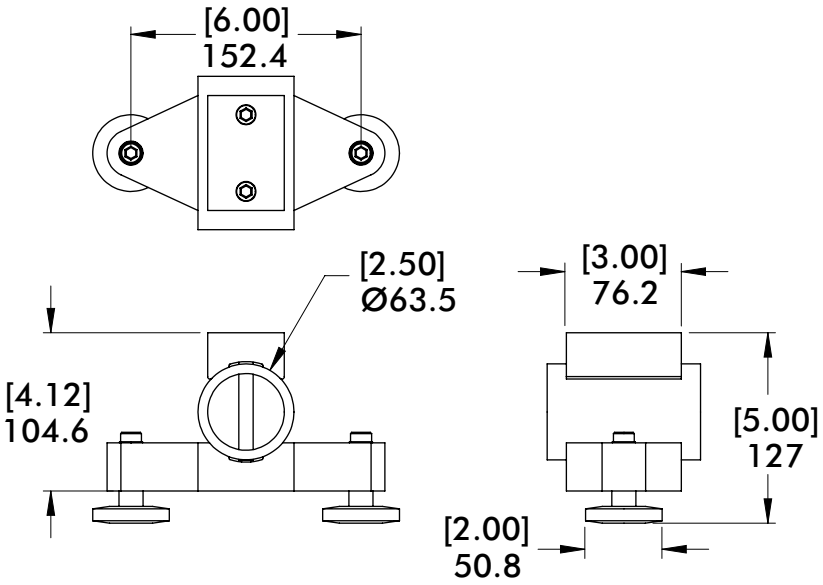

Material: Aluminum

Model Number	Weight
CPI-THM-250-DBL	1.54g [3.40 lb]



Material: Steel

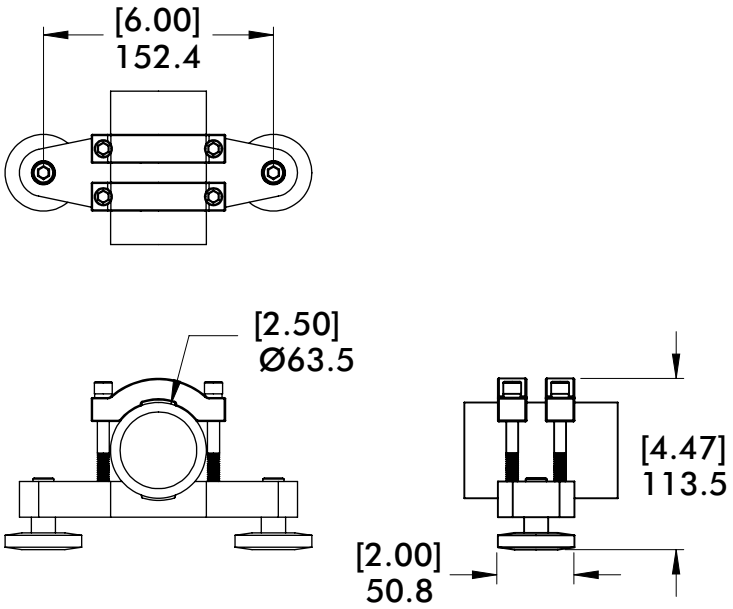

Material: Aluminum

Model Number	Weight
CPI-THM-250-DBL-WTTB	1.09g [2.40 lb]

WRIST ROTATE ASSEMBLY

Round Tooling | Dimensions | Technical Specifications

Features:

- These self-contained tip units are designed for use with dual-axis loaders and unloaders.
- The amount of rotation can be adjusted with the use of a cylinder stop tube.
- The unique wedge-lock uses frictional force to secure the unit within the tubing. (U.S. Patent No. 5,411,232)
  * Rotation is controlled by adjusting the length of a stop tube and limiting the stroke of the cylinder
- A rod extension is used to move the cylinder away from the rotate point. To order the rod extension separately, the part number is CPI-CRE-10-[Length]

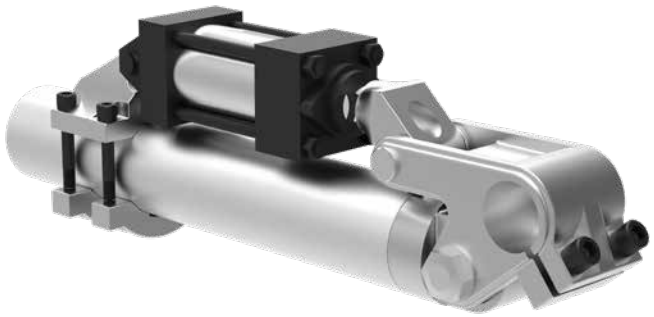

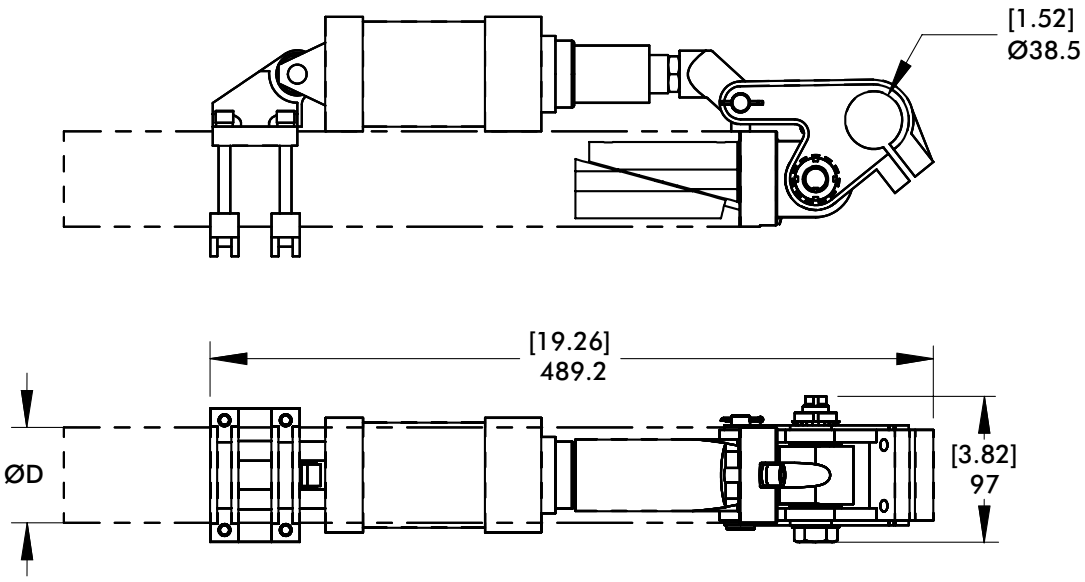

Model Number	ØD	Weight
CPI-WRWM-45	60mm	[8.5 lb] 3.9 kg
CPI-WRWM-90	60mm	[10.5 lb] 4.8 kg

CPI – WRWM – ( ) – 60 – ( )

Base Model
WRWM
Wrist Rotate Assembly (Metric Version)

Rotation

45	0° - 45°
90	0° - 90°

Cylinder Bore

00	No Cylinder Provided
50	50 mm
60	60 mm

Model Number	ØD	Weight
CPI-WRW-45	2.50 in	[8.5 lb] 3.9 kg
CPI-WRW-90	2.50 in	[10.5 lb] 4.8 kg

CPI – WRW – ( ) – 25 – ( )

Base Model
WRW
Wrist Rotate Assembly

Rotation

45	0° - 45°
90	0° - 90°

Cylinder Bore

00	No Cylinder Provided
20	2.00"
25	2.50"

FLANGE END MOUNT BRACKET AND BLOCKS

Round Tooling | Dimensions | Technical Specifications

Nominal (Ø) given
See chart on Page 72 for actual (Ø) size

CLM-xxx-15F End Flange Mount for Ø20mm/0.75" Tube (MIcro)

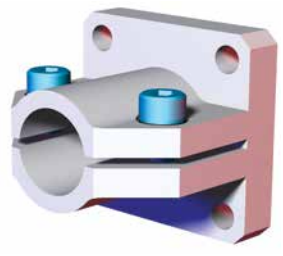

Specifications:
Max. Static Clamp Load:
20.3 N*m [15 ft-lb]
Material: Aluminum

Model Number	(Ø)"D"	Weight
CPI-CLM-**20M**-15F	**20mm**	[.26 lb] .12 kg
CPI-CLM-**75**-15F-**ATI**	**.75"**(in)	[.32 lb] .14 kg

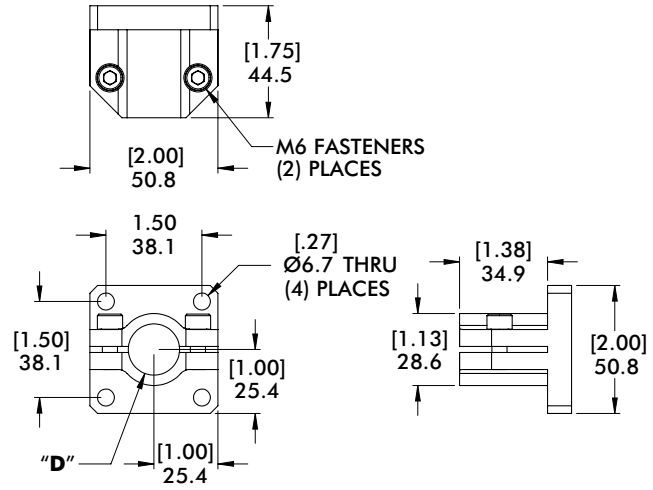

CLM-xxx-15F End Flange Mount for Ø25mm/1.00" Tube (Micro)

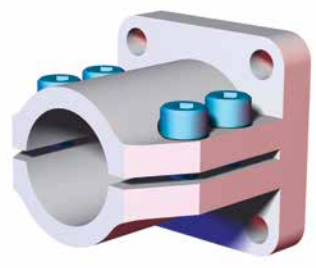

Specifications:
Max. Static Clamp Load:
40.7 N*m [30 ft-lb]
Material: Aluminum

Model Number	(Ø)"D"	Weight
CPI-CLM-**25M-15F**	**25mm**	[.32 lb] .14 kg
CPI-CLM-**10-15F**	**1.00"**(in)	

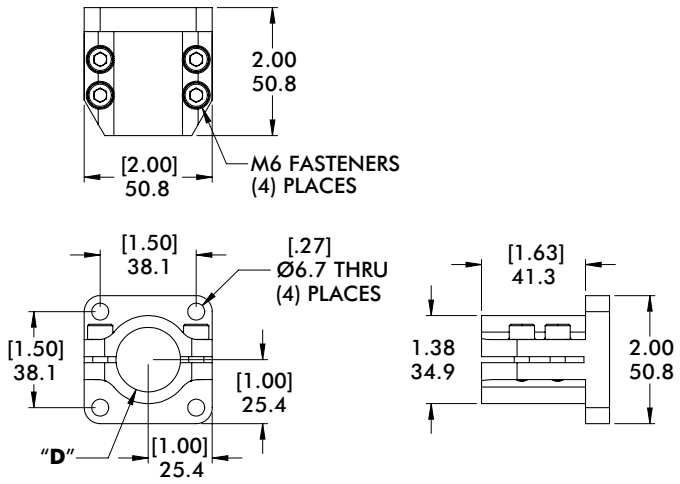

M1511 End Flange Mount for Ø1.00" Tube

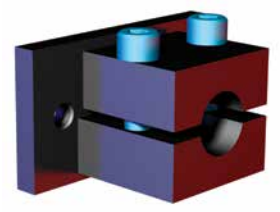

Specifications:
Max. Static Clamp Load:
203 N*m [150 ft-lb]
Material: Aluminum

Model Number	Weight
M1511	[1.08 lb] .49 kg

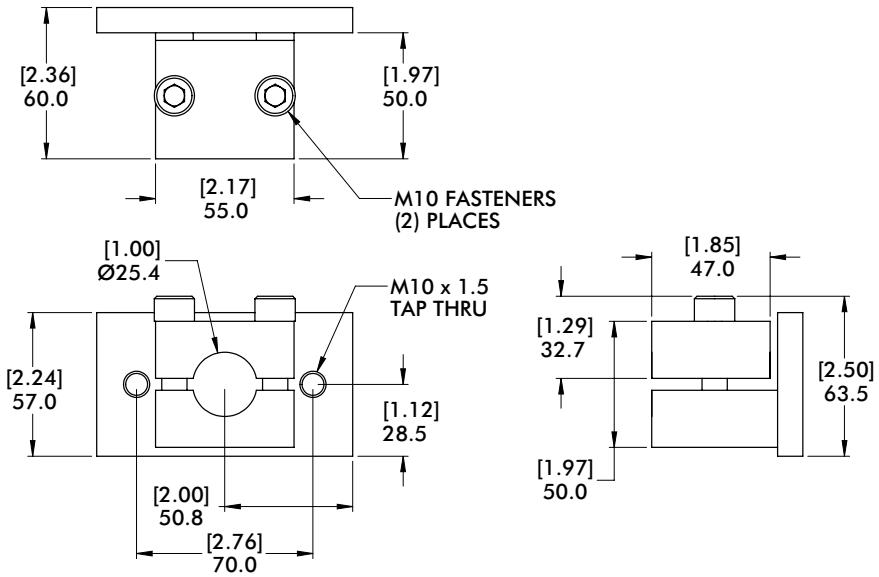

Dimensions and technical information are subject to change without notice

FLANGE END MOUNT BRACKET AND BLOCKS

Nominal (Ø) given
See chart on Page 72
for actual (Ø) size

Round Tooling | Dimensions | Technical Specifications

KL/CL End Flange Mount for Ø40mm/1.50" Tube

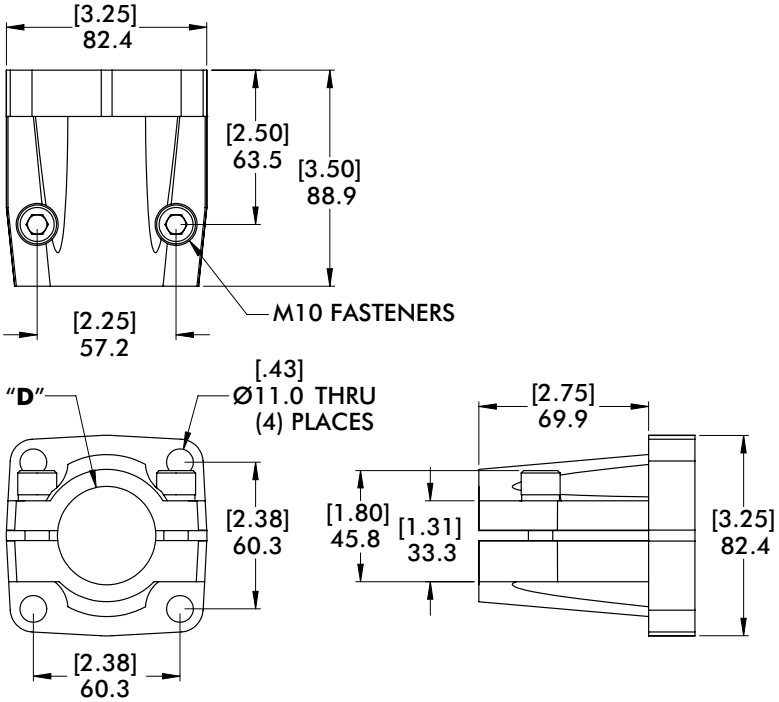

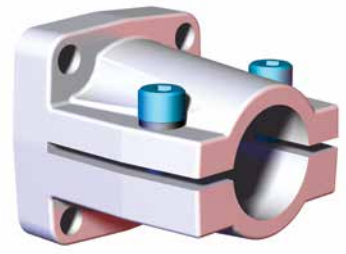

Specifications:
Max. Static Clamp Load:
203 N*m [150 ft-lb]
Material: Aluminum

Model Number	(Ø)"D"	Weight
CPI-**KL-40-60F**	**40mm**	[1.55 lb] .70 kg
CPI-**CL-15-238F**	**1.50"**(in)	[1.61 lb] .73 kg

KL/CL End Flange Mount for Ø60mm/2.50" Tube

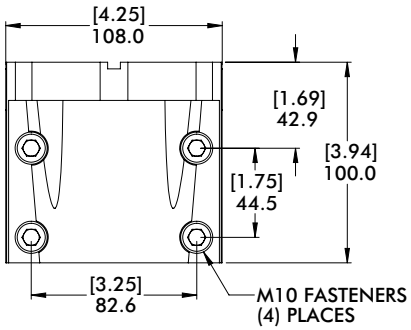

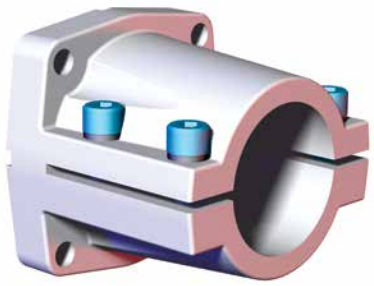

Specifications:
Max. Static Clamp Load:
675 N*m [500 ft-lb]
Material: Aluminum

Model Number	(Ø)"D"	Weight
CPI-**KL-60-78F**	**60mm**	[2.73 lb] 1.24 kg
CPI-**CL-25-312F**	**2.50"**(in)	[2.52 lb] 1.14 kg

FLANGE END MOUNT BRACKET AND BLOCKS

Round Tooling | Dimensions | Technical Specifications

Nominal (Ø) given
See chart on Page 72 for actual (Ø) size

CL End Flange Mount with Ø125mm Bolt Pattern

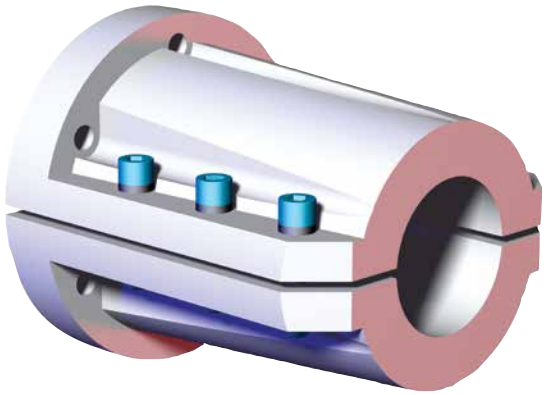

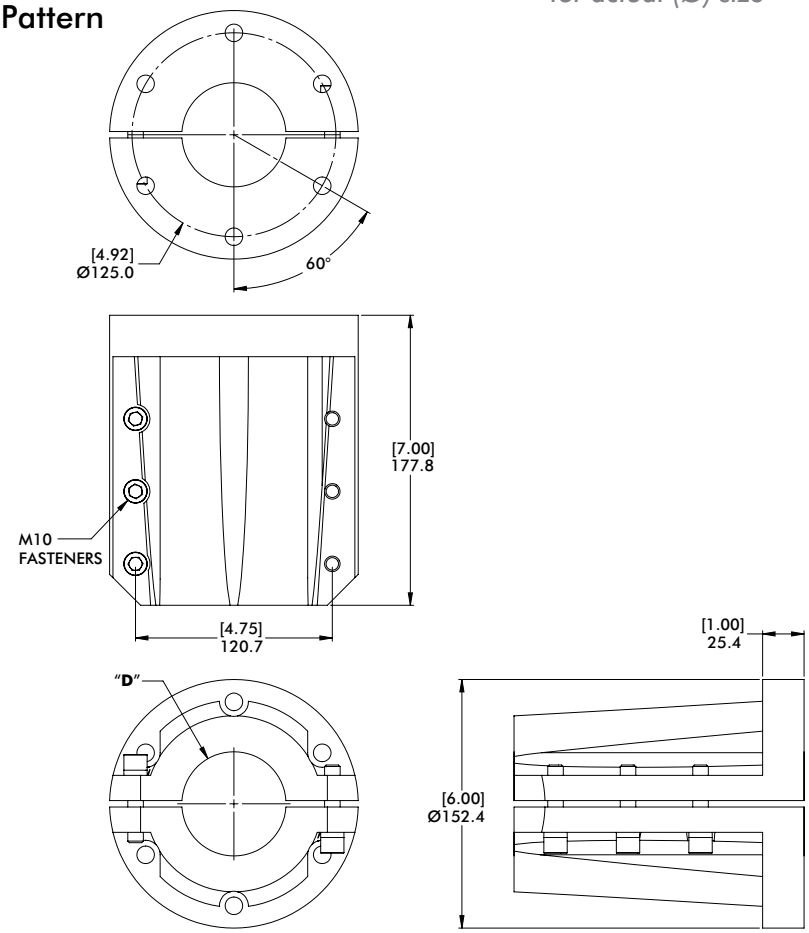

Specifications:
Max. Static Clamp Load:
746 N*m [550 ft-lb]
Material: Aluminum

Model Number	(Ø)"D"	Weight
CPI-CL-**60**-125F	**60mm**	[9.86 lb] 4.47 kg
CPI-CL-**250**-125F	**2.50"**(in)	[10.20 lb] 4.63 kg
CPI-CL-**300**-125F	**3.00"**(in)	[8.70 lb] 3.95 kg

RJM Ø40mm Spherical Flange End Mount

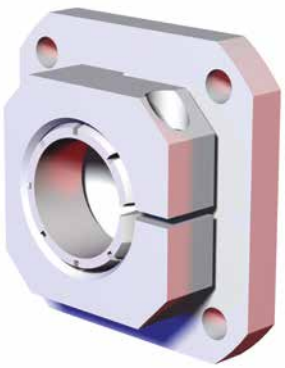

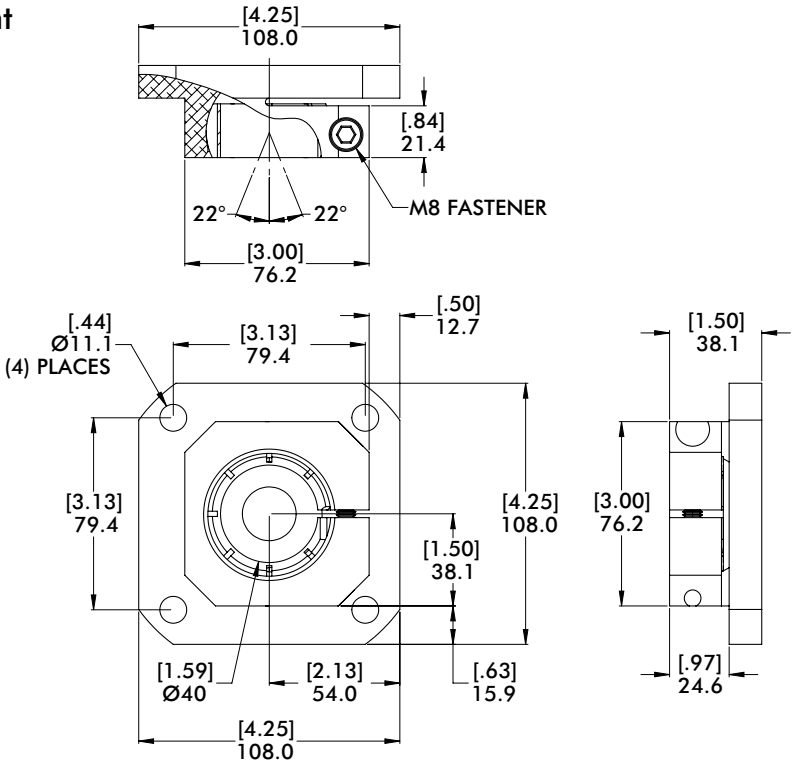

Specifications:
Max. Static Clamp Load:
203 N*m [150 ft-lb]
Material: Aluminum

Model Number	Weight
CPI-**RJM-78F-40S**	[1.54 lb] .70 kg

Dimensions and technical information are subject to change without notice

FLANGE MID MOUNT BRACKETS AND BLOCKS

Nominal (Ø) given
See chart on Page 72
for actual (Ø) size

Round Tooling | Dimensions | Technical Specifications

CLM-xxx-1517F-90 Mid Flange Mount for Ø20mm/0.75" Tube (Micro)

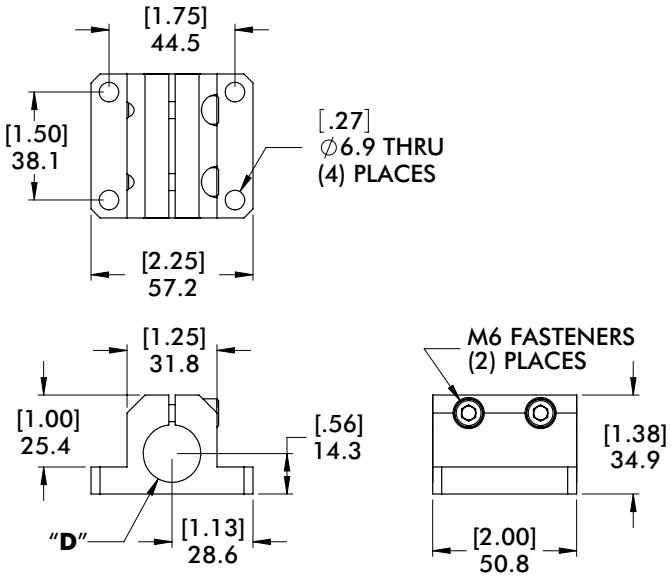

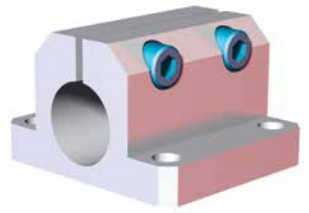

Specifications:
Max. Static Clamp Load:
47.5 N*m [35 ft-lb]
Material: Aluminum

Model Number	(Ø)"D"	Weight
CPI-**CLM-20M**-1517F-90	**20mm**	[.33 lb] .14 kg
CPI-**CLM-75**-1517F-90	**.75"**(in)	[.35 lb] .16 kg

CLM-xxx-152F-90 Mid Flange Mount for Ø25mm/1.00" Tube (Micro)

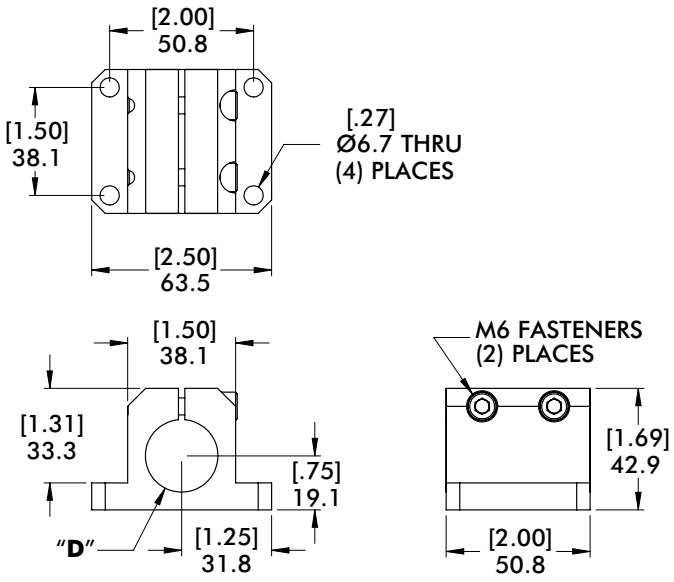

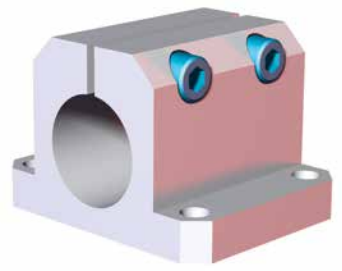

Specifications:
Max. Static Clamp Load:
81.4 N*m [60 ft-lb]
Material: Aluminum

Model Number	(Ø)"D"	Weight
CPI-CLM-**25M**-152F-90	**25mm**	[.41 lb] .19 kg
CPI-CLM-**10**-152F-90	**1.00"**(in)	

FLANGE MID MOUNT BRACKETS AND BLOCKS

Round Tooling | Dimensions | Technical Specifications

Nominal (Ø) given
See chart on Page 72 for actual (Ø) size

M-1509 Inline End Flange Mount for Ø1.00" Tube

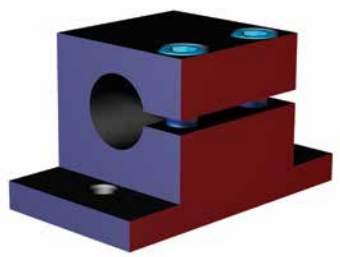

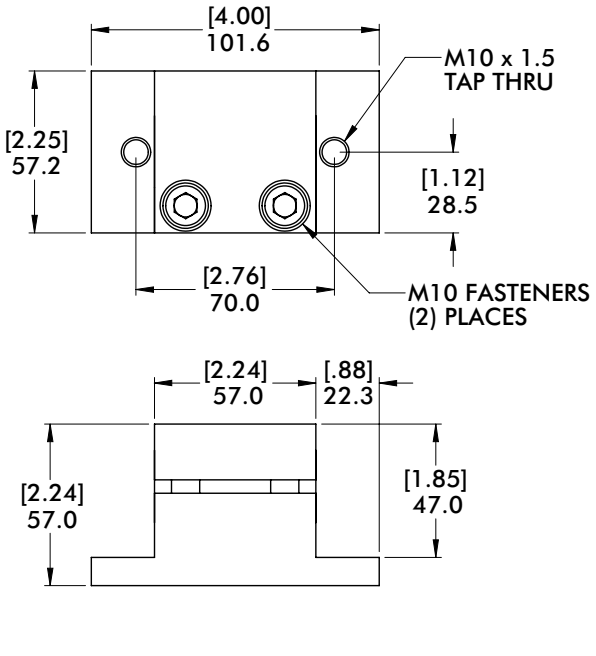

Specifications:
Max. Static Clamp Load:
203 N*m [150 ft-lb]
Material: Aluminum

Model Number	Weight
M1509	[.99 lb] .45 kg

M-1510 End Flange Mount for Ø1.00" Tube

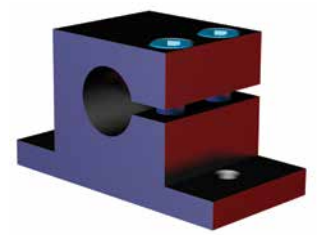

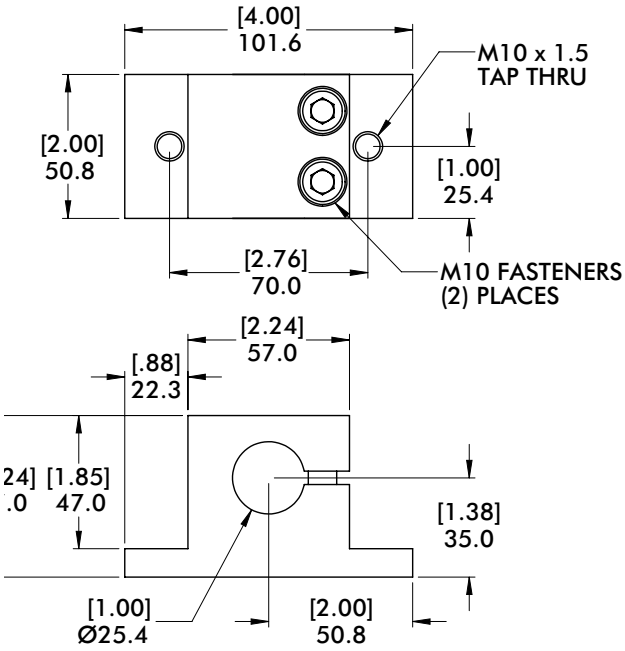

Specifications:
Max. Static Clamp Load:
203 N*m [150 ft-lb]
Material: Aluminum

Model Number	Weight
M1510	[.87 lb] .39 kg

Dimensions and technical information are subject to change without notice

FLANGE MID MOUNT BRACKETS AND BLOCKS

Nominal (Ø) given
See chart on Page 72
for actual (Ø) size

Round Tooling | Dimensions | Technical Specifications

CL-xx-xxxF-90 Mid Flange Mount for Ø40mm/1.50" Tube

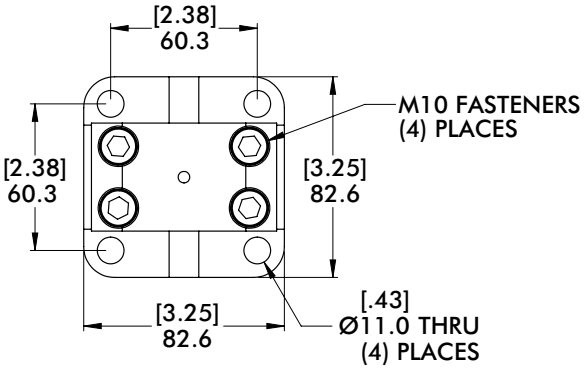

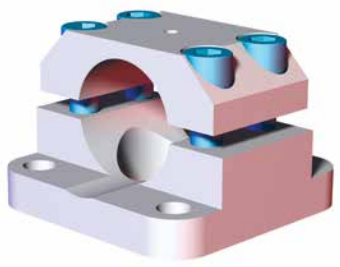

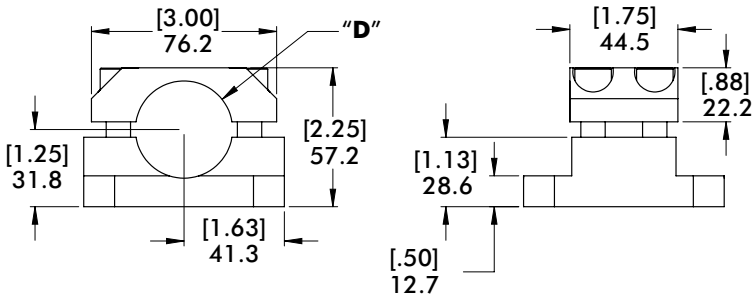

Specifications:
Max. Static Clamp Load:
475 N*m [350 ft-lb]
Material: Aluminum

Model Number	(Ø)"D"	Weight
CPI-**KL-40-60F**-90	**40mm**	[1.09 lb] .49 kg
CPI-**CL-15-238F**-90	**1.50"**(in)	[1.11 lb] .50 kg

KL-60-xxxF-90 Mid Flange Mount for Ø60mm Tube

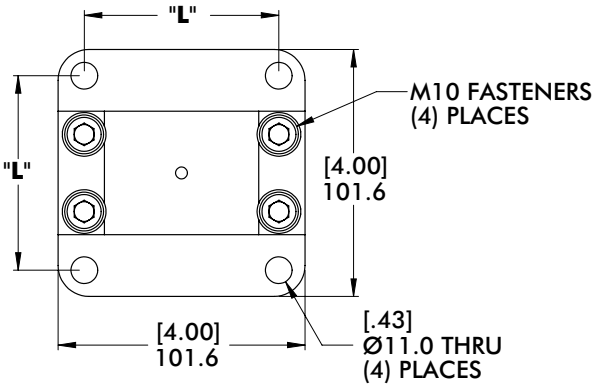

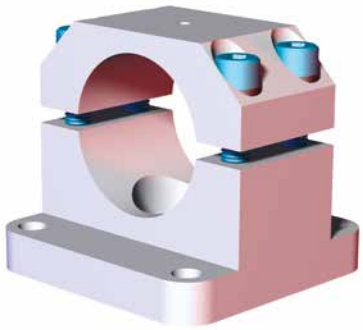

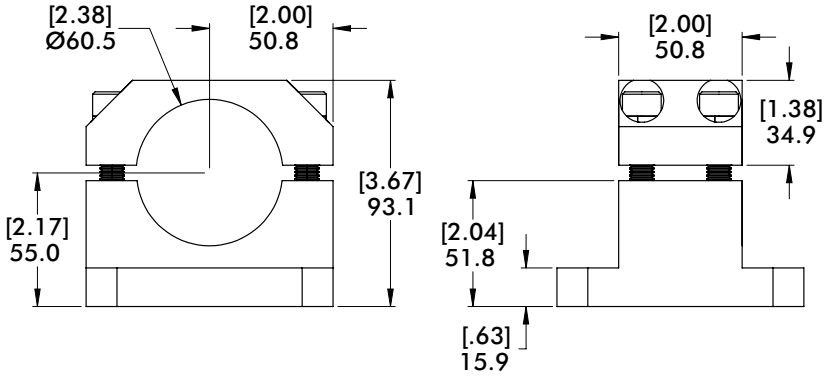

Specifications:
Max. Static Clamp Load:
675 N*m [500 ft-lb]
Material: Aluminum

Model Number	"L"	Weight
CPI-KL-60-**78F**-90	[3.07] 78	[2.24 lb] 1.02 kg]
CPI-KL-60-**80F**-90	[3.15] 80	

FLANGE MID MOUNT BRACKETS AND BLOCKS

Round Tooling | Dimensions | Technical Specifications

Nominal (Ø) given
See chart on Page 72 for actual (Ø) size

CL-25-312F-90 Mid Flange Mount for Ø2.50" Tube

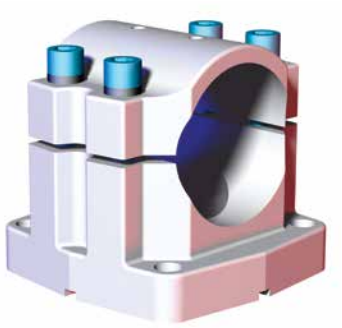

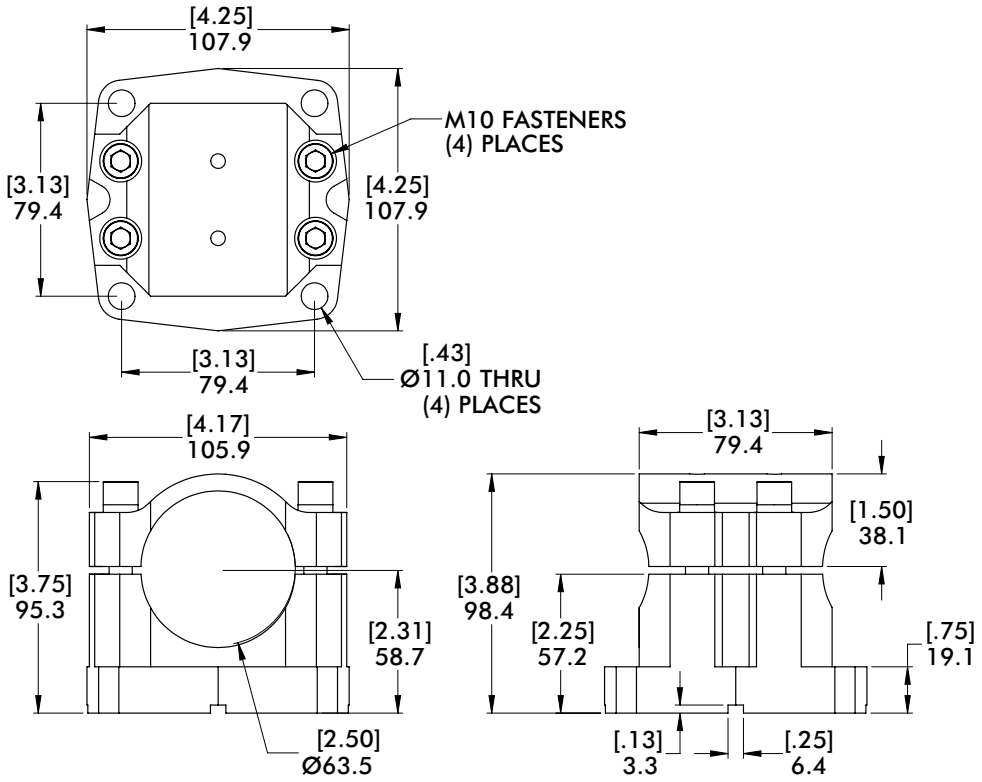

Specifications:
Max. Static Clamp Load:
675 N*m [500 ft-lb]
Material: Aluminum

Model Number	Weight
CPI-**CL-25-312F-90**	[2.51 lb] 1.14 kg

World Tool Direct Mounts

CL-xx-DM-10F Direct Mount Bracket for 2.50" Tube

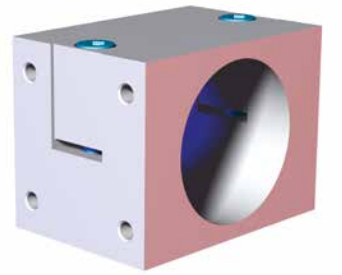

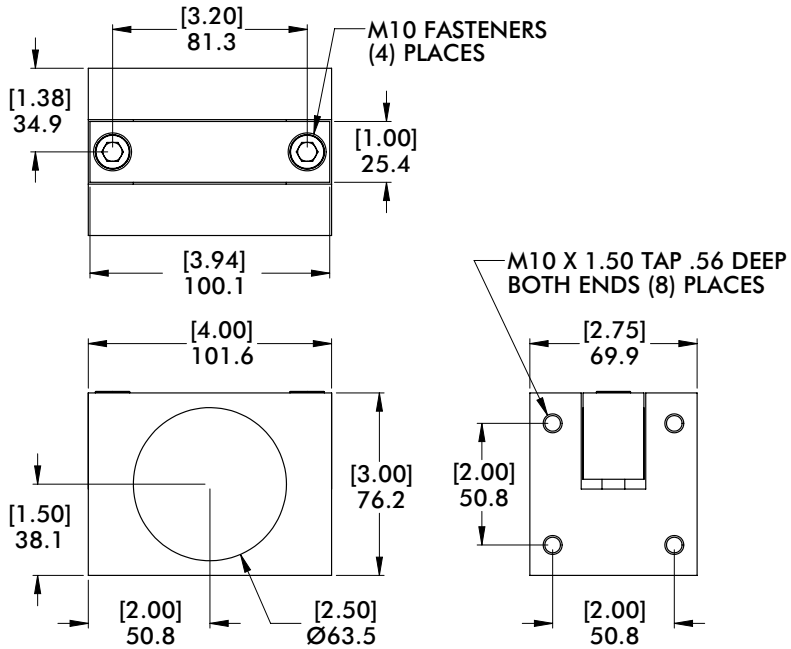

Material: Aluminum

Model Number	Weight
CPI-**CL-25-DM-10F**	[1.89 lb] .86 kg

Dimensions and technical information are subject to change without notice

WORLD TOOL DIRECT MOUNTS

Nominal (Ø) given
See chart on Page 72
for actual (Ø) size

Round Tooling | Dimensions | Technical Specifications

CL-xx-DM-xxF Direct Mount Bracket for Ø60mm/2.50" Tube

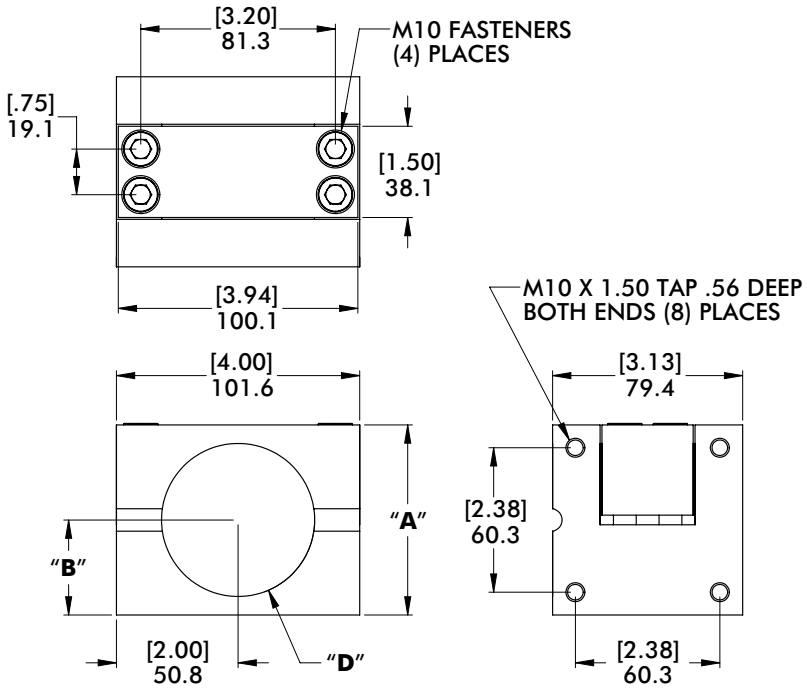

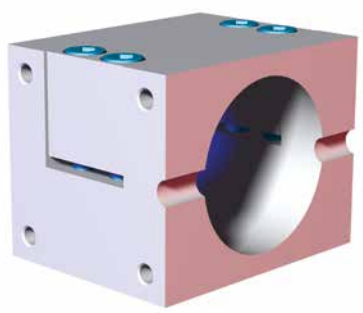

Material: Aluminum

Model Number	(Ø)"D"	A	B	Weight
CPI-CL-**60**-DM-**40F**	**60mm**	[3.25] 82.6	[1.63] 41.3	[2.49 lb] 1.13 kg
CPI-CL-**25**-DM-**15F**	**2.50"**(in)	[3.13] 79.4	[1.58] 39.7	[2.36 lb] 1.07 kg

CL-25-DM-15F-EXT Direct Mount Bracket for Ø2.50" Tube

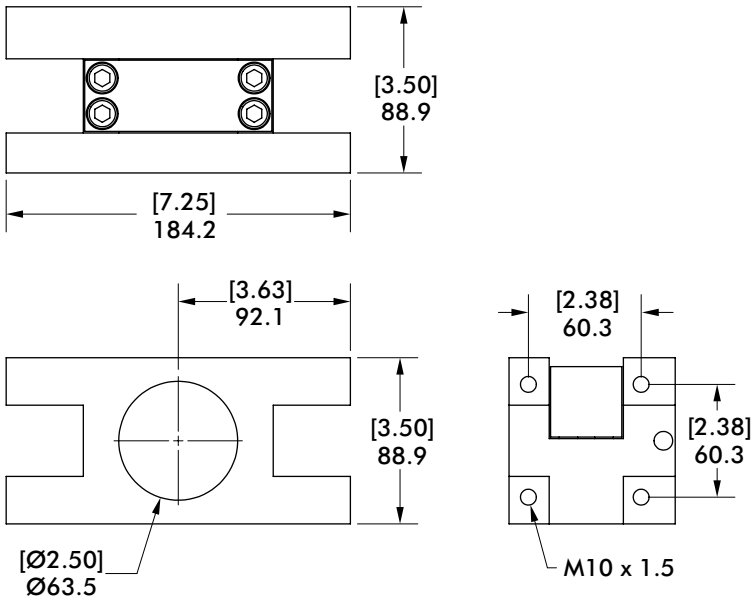



Material: Aluminum

Model Number	Weight
CPI-**CL-25-DM-15F-EXT**	[4.23 lb] 1.92 kg

BASE MOUNT BLOCK

Round Tooling | Dimensions | Technical Specifications

Nominal (Ø) given
See chart on Page 72
for actual (Ø) size

BC-00-xxx Ø25mm/1.00" Tube/Ø40mm/1.50" Tube

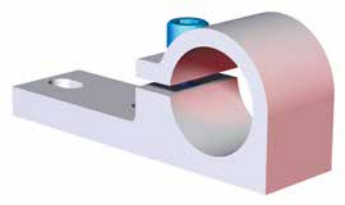

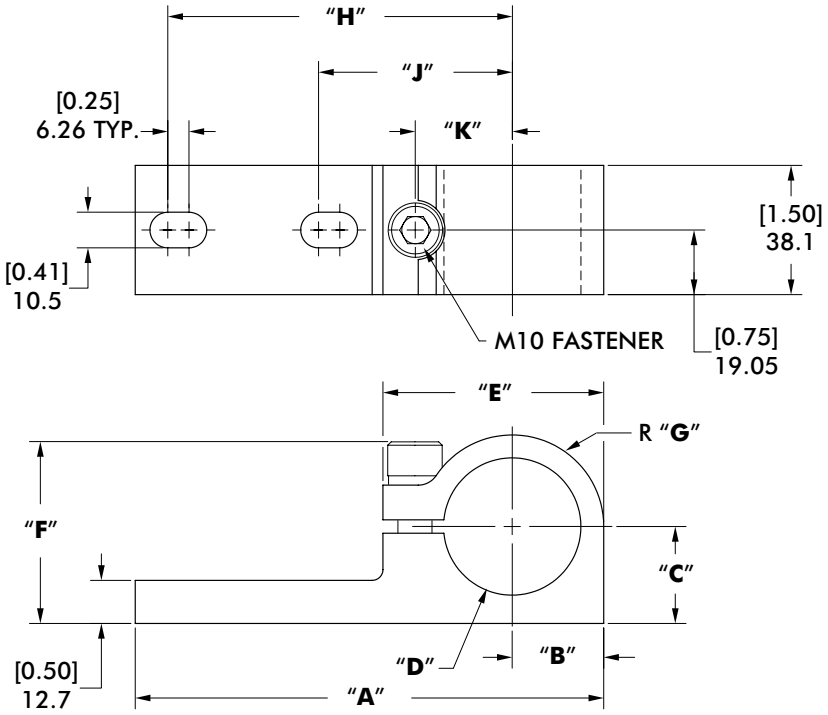

Specifications:
Max. Static Clamp Load:
13.6 N*m [10 ft-lb]
Material: Aluminum

Model Number	(Ø)"D"	"A"	"B"	"C"	"E"	"F"	"G"	"H"	"J"	"K"	Weight
CPI-BC-00-**25**	**25mm**	[4.88] 123.8	[0.75] 19.0	[0.88] 22.2	[2.05] 52.1	[1.87] 47.4	[0.75] 19.0	[3.75] 95.3	[2.00] 50.8	[0.88] 22.3	[0.55 lb] 0.25 kg
CPI-BC-00-**100**	**1.00"**(in)										
CPI-BC-00-**40**	**40mm**	[5.44] 138.1	[1.06] 26.9	[1.13] 28.6	[2.56] 65.1	[2.18] 55.4	[1.06] 26.9	[4.00] 101.6	[2.25] 57.2	[1.13] 28.6	[0.68 lb] 0.31 kg
CPI-BC-00-**150**	**1.50"**(in)										

Dimensions and technical information are subject to change without notice

CROSS TRANSITION BRACKETS AND BLOCKS

Nominal (Ø) given
See chart on Page 72
for actual (Ø) size

Round Tooling | Dimensions | Technical Specifications

SC-xx-xx Ø25mm/1.00" to Ø25mm/1.00" (Single Bolt)

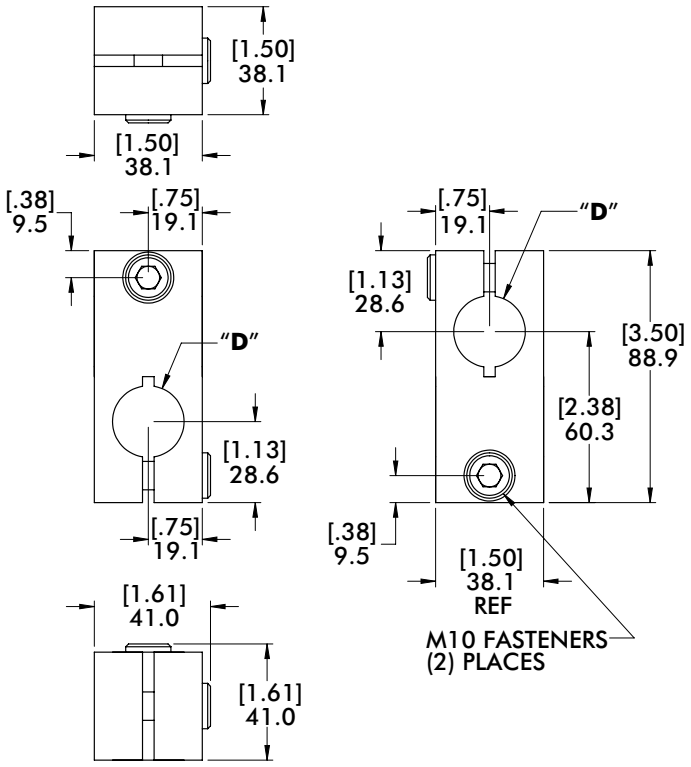



Specifications:
Max. Static Clamp Load:
162 N*m [120 ft-lb]
Material: Aluminum

Model Number	(Ø)"D"	Weight	Finish
CPI-SC-**25-25**	**25mm**		SILVER
CPI-SC-**25-25-BL**	**25mm**	[.60 lb] .27 kg	BLUE
CPI-SC-**1010**	**1.00"**(in)		SILVER

M1513 Ø1.00" to Ø1.00"



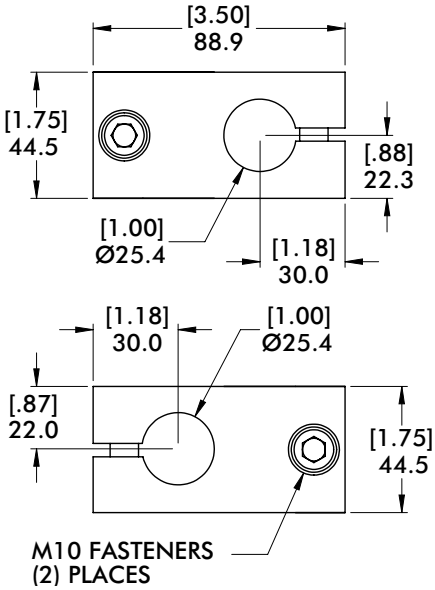

Specifications:
Max. Static Clamp Load:
203 N*m [150 ft-lb]
Material: Aluminum

Model Number	Weight
M1513	[.82 lb] .37 kg

CLM Ø12mm/.50" to Ø12mm/.50"



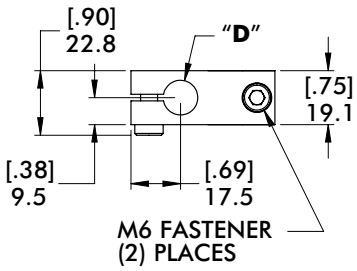

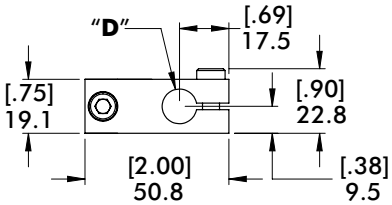

Specifications:
Max. Static Clamp Load:
13.6 N*m [10 ft-lb]
Material: Aluminum

Model Number	(Ø)"D"	Weight
CPI-CLM-**12M-12M**	**12mm**	[.10 lb] .05 kg
CPI-CLM-**50-50**	**.50"**(in)	

CROSS TRANSITION BRACKETS AND BLOCKS

Round Tooling | Dimensions | Technical Specifications

Nominal (Ø) given
See chart on Page 72
for actual (Ø) size

CLM Ø20mm/.75" to Ø12mm/.50"



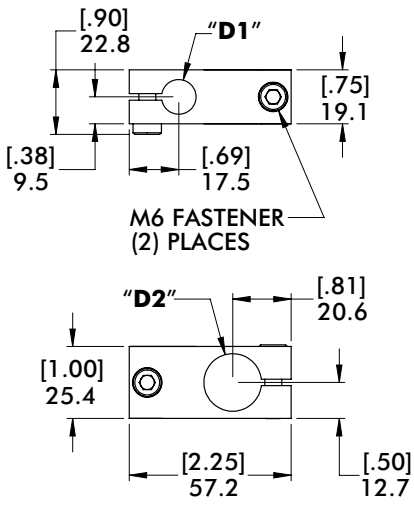

Specifications:
Max. Static Clamp Load:
Ø20mm/.75":
20.3 N*m [15 ft-lb]
Ø12mm/.50":
13.6 N*m [10 ft-lb]
Material: Aluminum

Model Number	(Ø)"D1"	(Ø)"D2"	Weight
CPI-CLM-**20M-12M**	**12mm**	**20mm**	[13 lb] .06 kg
CPI-CLM-**75-50**	**.50"**(in)	**.75 in**	

CLM Ø25mm/1.00" to Ø12mm/.50"



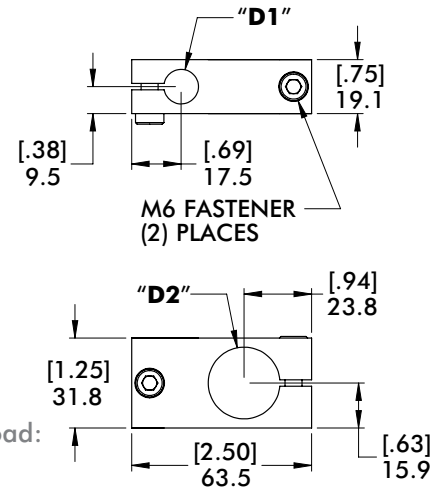

Specifications:
Max. Static Clamp Load:
Ø25mm/1.00":
67.8 N*m [50 ft-lb]
Ø12mm/.50":
13.6 N*m [10 ft-lb]
Material: Aluminum

Model Number	(Ø)"D1"	(Ø)"D2"	Weight
CPI-CLM-**25M-12M**	**12mm**	**25mm**	[.08 lb] .17 kg
CPI-CLM-**10-50**	**.50"**(in)	**1.00"**(in)	

CLM Ø20mm/.75" to Ø20mm/.75"



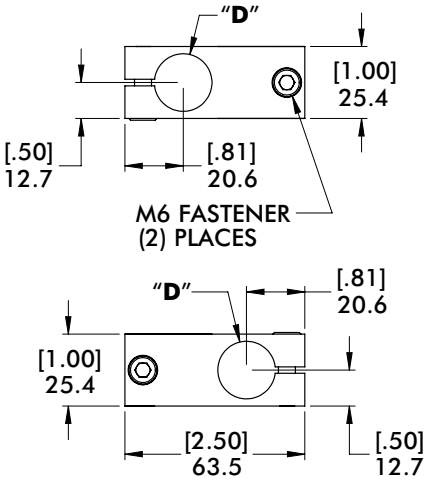

Specifications:
Max. Static Clamp Load:
20.3 N*m
[15 ft-lb]

Model Number	(Ø)"D"	Weight
CPI-CLM-**20M-20M** Material: Aluminum	**20mm**	[.16 lb] .07 kg
CPI-CLM-**20M-20M-ST** Material: Steel	**20mm**	[.40 lb] .18 kg
CPI-CLM-**75-75** Material: Aluminum	**.75"**(in)	[.17 lb] .08 kg

CLM Ø25mm/1.00" to Ø20mm/.75"

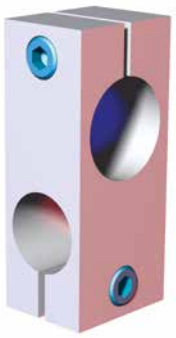

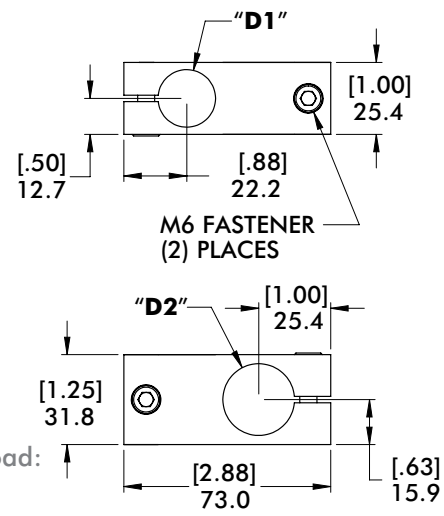

Specifications:
Max. Static Clamp Load:
Ø25mm/1.00":
67.8 N*m [50 ft-lb]
Ø20mm/.75":
20.3 N*m [15 ft-lb]
Material: Aluminum

Model Number	(Ø)"D1"	(Ø)"D2"	Weight
CPI-CLM-**25M-20M**	**20mm**	**25mm**	[.23 lb] .11 kg
CPI-CLM-**10-75**	**.75"**(in)	**1.00"**(in)	

Dimensions and technical information are subject to change without notice

CROSS TRANSITION BRACKETS AND BLOCKS

Nominal (Ø) given
See chart on Page 72
for actual (Ø) size

Round Tooling | Dimensions | Technical Specifications

M-xxx-xxx-M Ø25mm/1.00" to Ø25mm/1.00" (Double Bolt)

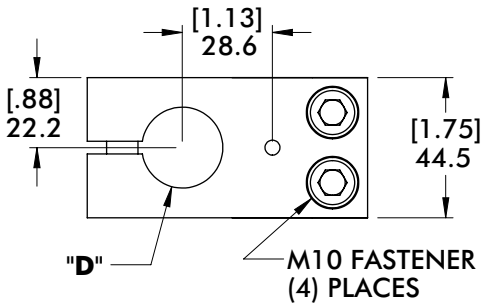



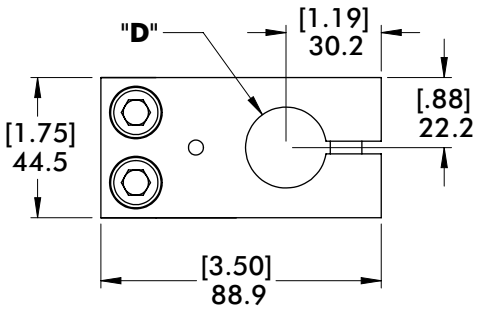

Specifications:
Max. Static Clamp Load:
Ø25mm/1.00":
434 N*m [320 ft-lb]
Material: Aluminum

Model Number	(Ø)"D"	Weight	Finish
M-**25M-25M**-M	**25mm**	[.93 lb] .42 kg	**BLUE**
M-**10E-10E**-M	**1.00"**(in)		**BLACK**

M-xxx-xxx-M Ø40mm/1.25"/1.50" to Ø25mm/1.00" (Double Bolt)

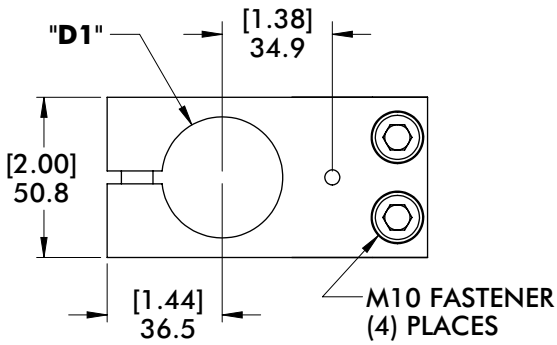



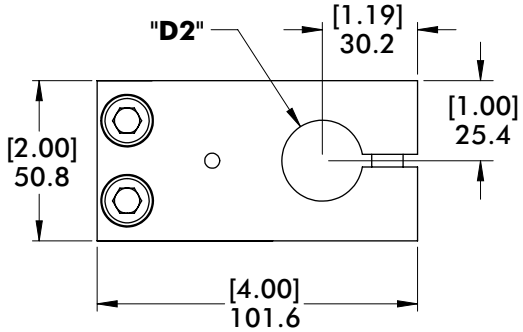

Specifications:
Max. Static Clamp Load:
Ø25mm/1.00":
434 N*m [320 ft-lb]
Ø40mm/1.50":
624 N*m [460 ft-lb]
Material: Aluminum

Model Number	(Ø)"D1"	(Ø)"D2"	Weight	Finish
M-**10E-12E**-M	**1.25"**(in)	**1.00"**(in)	[1.29 lb] .58 kg	**BLACK**
M-**10E-15E**-M	**1.50"**(in)	**1.00"**(in)	[1.18 lb] .54 kg	**BLACK**
M-**25M-40M**-M	**40mm**	**25mm**		**BLUE**

CROSS TRANSITION BRACKETS AND BLOCKS

Round Tooling | Dimensions | Technical Specifications

Nominal (Ø) given
See chart on Page 72
for actual (Ø) size

M-xxx-xxx-M Ø60mm/2.50" to Ø25mm/1.00" (Double Bolt)



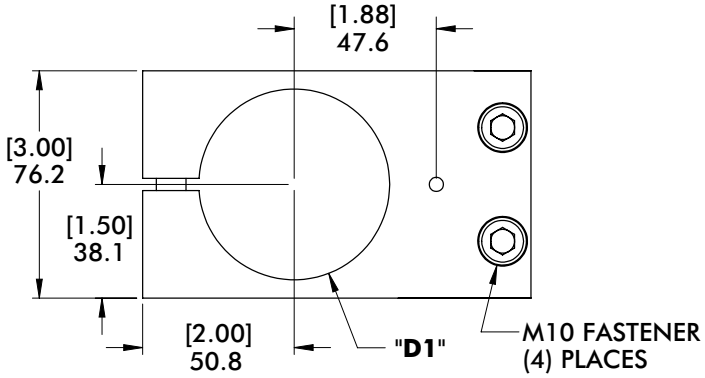

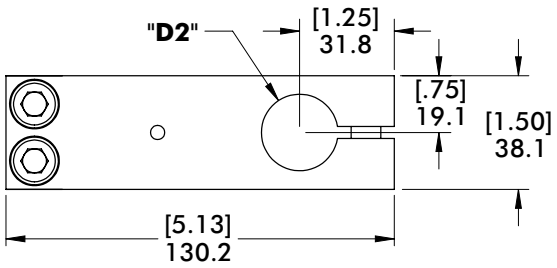

Specifications:
Max. Static Clamp Load:
Ø25mm/1.00":
434 N*m [320 ft-lb]
Ø60mm/2.50":
813 N*m [600 ft-lb]
Material: Aluminum

Model Number	(Ø)"D1"	(Ø)"D2"	Weight	Finish
M-**25M-60M**-M	**60mm**	**25mm**	[1.52 lb] .69 kg	**BLUE**
M-**10E-25E**-M	**2.50"**(in)	**1.00"**(in)	[1.44 lb] .65 kg	**BLACK**

M-xxx-xxx-M Ø40mm/1.25"/1.50" to Ø40mm/1.25"/1.50" (Double Bolt)



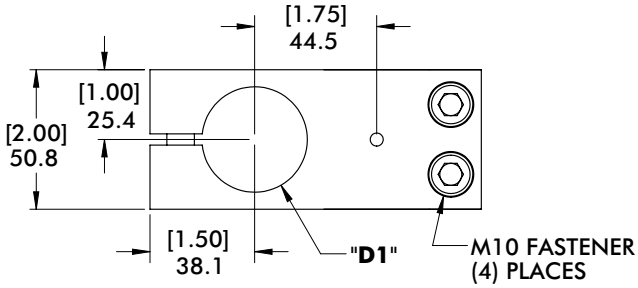

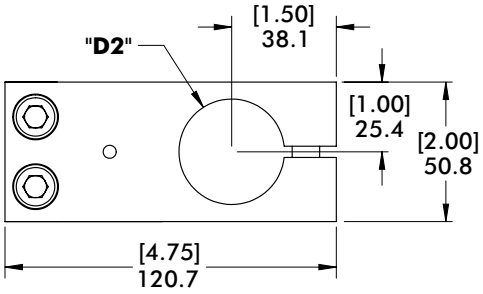

Specifications:
Max. Static Clamp Load:
Ø1.25":
515 N*m [380 ft-lb]
Ø40mm/1.50":
624 N*m [460 ft-lb]
Material: Aluminum

Model Number	(Ø)"D1"	(Ø)"D2"	Weight	Finish
M-**12E-12E**-M	**1.25"**(in)	**1.25"**(in)	[1.51 lb] .69 kg	**BLACK**
M-**12E-15E**-M	**1.25"**(in)	**1.50"**(in)	[1.41 lb] .64 kg	**BLACK**
M-**15E-15E**-M	**1.50"**(in)	**1.50"**(in)	[1.31 lb] .59 kg	**BLACK**
M-**40M-40M**-M	**40mm**	**40mm**	[1.23 lb] .56 kg	**BLUE**

Dimensions and technical information are subject to change without notice

CROSS TRANSITION BRACKETS AND BLOCKS

Nominal (Ø) given
See chart on Page 72
for actual (Ø) size

Round Tooling | Dimensions | Technical Specifications

M-xxx-xxx-M Ø60mm/2.50 to Ø40mm/1.50" (Double Bolt)

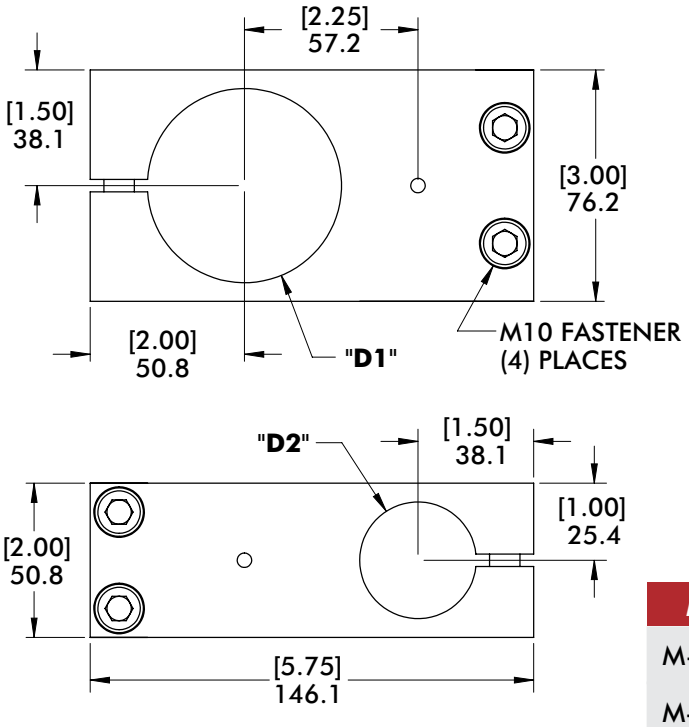



Specifications:
Max. Static Clamp Load:
Ø40mm/1.50":
624 N*m [460 ft-lb]
Ø60mm/2.50":
813 N*m [600 ft-lb]
Material: Aluminum

Model Number	(Ø)"D1"	(Ø)"D2"	Weight	Finish
M-**40M-60M**-M	**60mm**	**40mm**	[2.08 lb] .95 kg	**BLUE**
M-**15E-25E**-M	**2.50"**(in)	**1.50"**(in)		**BLACK**

M-xxx-xxx-M Ø60mm/2.50" to Ø60mm/2.50" (Double Bolt)

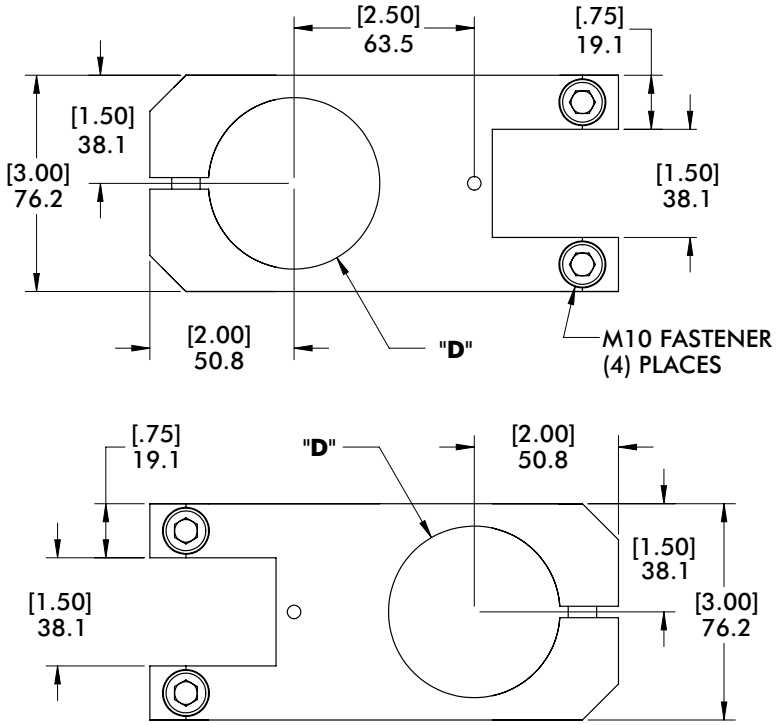



Specifications:
Max. Static Clamp Load:
813 N*m [600 ft-lb]
Material: Aluminum

Model Number	(Ø)"D"	Weight	FINISH
M-**60M-60M**-M	**60mm**	[2.07 lb] .94 kg	**BLUE**
M-**25E-25E**-M	**2.50"**(in)	[2.03 lb] .92 kg	**BLACK**

T-CLAMP TRANSITION BRACKETS AND BLOCKS

Round Tooling | Dimensions | Technical Specifications

Nominal (Ø) given
See chart on Page 72 for actual (Ø) size

TCAH Ø30mm to Ø25mm



Specifications:
Max. Static Clamp Load:
Ø30mm:
237 N*m [175 ft-lb]
Ø25mm/1.00":
200 N*m [150 ft-lb]
Material: Aluminum

Model Number	Weight
CPI-TCAH30M-**25M**	[0.72 lb] 325g

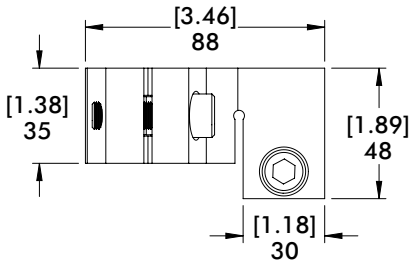

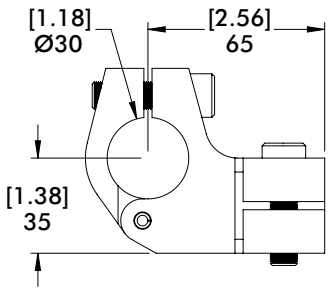

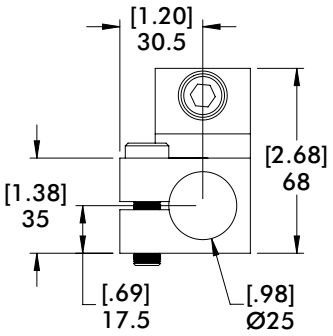

TCAH Ø30mm to Ø40mm

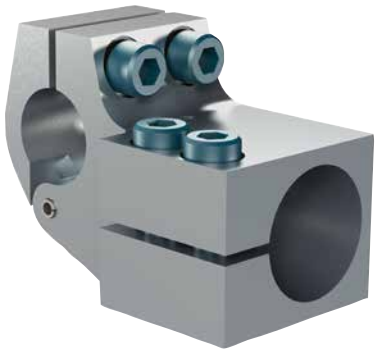

Specifications:
Max. Static Clamp Load:
Ø30mm:
237 N*m [175 ft-lb]
Ø40mm:
271 N*m [200 ft-lb]
Material: Aluminum

Model Number	Weight
CPI-TCAH30M-**40M**	[1.40 lb] 634g

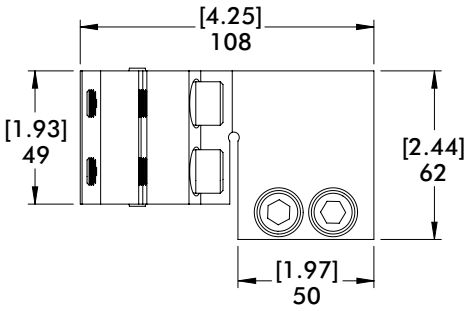

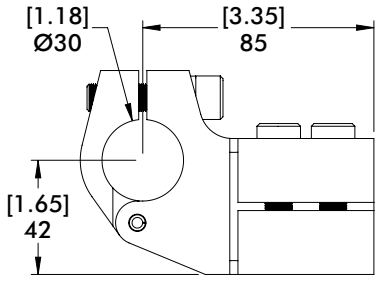

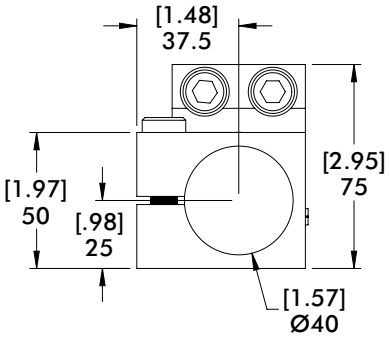

Dimensions and technical information are subject to change without notice

T-CLAMP TRANSITION BRACKETS AND BLOCKS

Nominal (Ø) given
See chart on Page 72
for actual (Ø) size

Round Tooling | Dimensions | Technical Specifications

TCA Ø2.50″ to Ø1.50″ T-Clamp Bracket Assembly

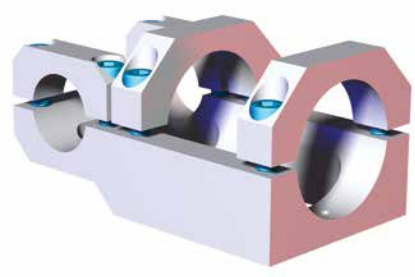

Specifications:
Max. Static Clamp Load:
Ø1.50″:
271 N*m [200 ft-lb]
Ø2.50″:
677 N*m [500 ft-lb]
Material: Aluminum

Model Number	Weight
CPI-**TCA-250-150**	[2.76 lb] 1.25 kg

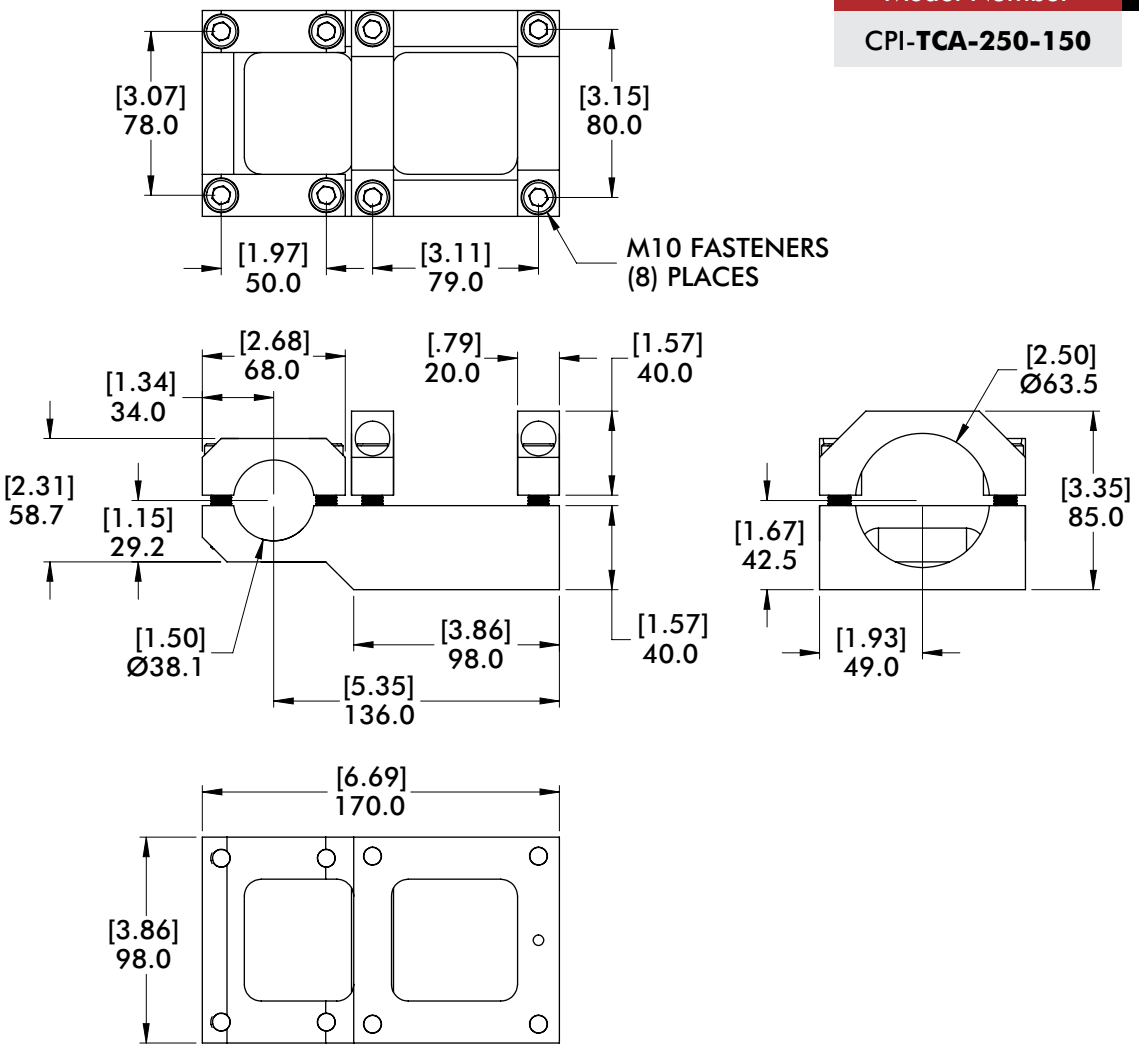

T-CLAMP TRANSITION BRACKETS AND BLOCKS

Round Tooling | Dimensions | Technical Specifications

Nominal (Ø) given
See chart on Page 72
for actual (Ø) size

TCA Ø60mm/2.50" to Ø40mm T-Clamp Bracket Assembly

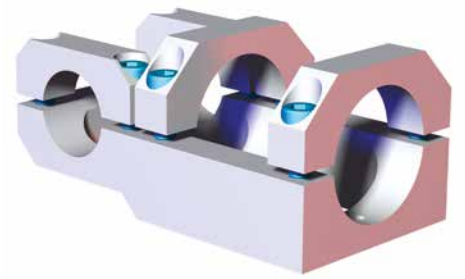

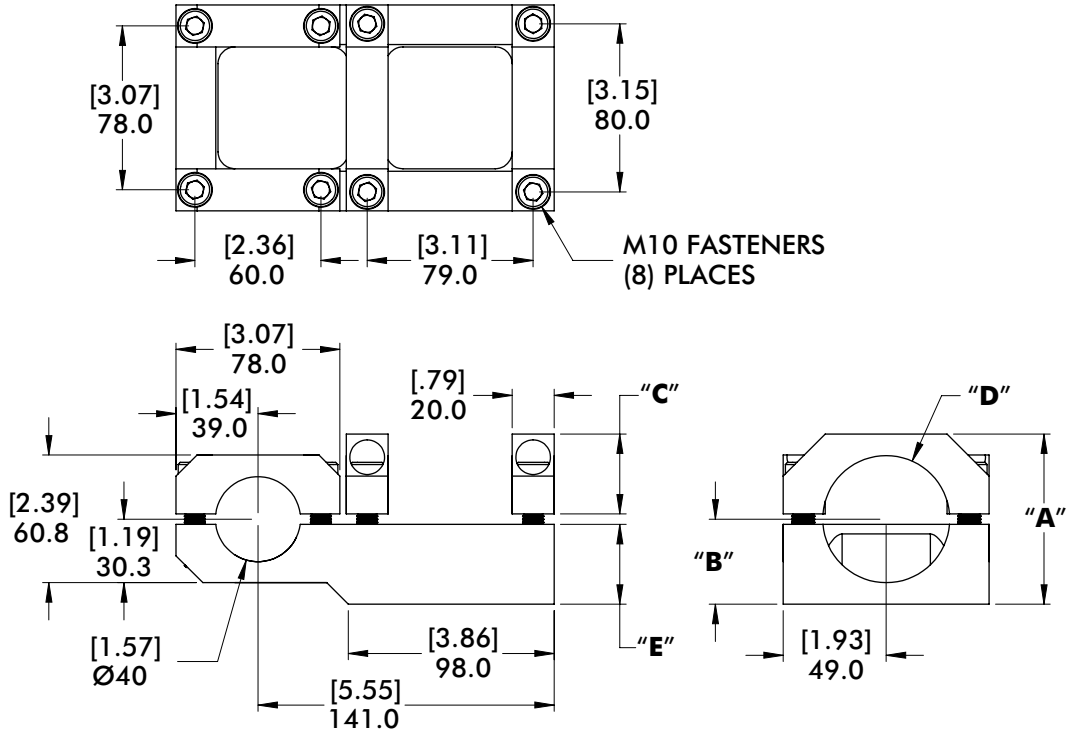

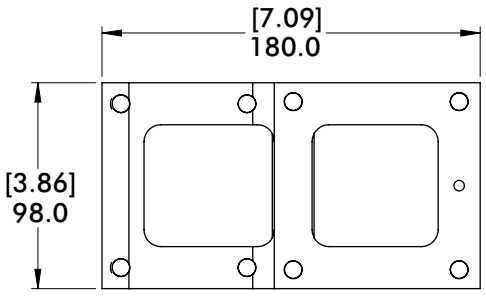

Specifications:
Max. Static Clamp Load:
Ø40mm:
271 N*m [200 ft-lb]
Ø60mm/2.50":
677 N*m [500 ft-lb]
Material: Aluminum

Model Number	(Ø)"D"	"A"	"B"	"C"	"E"	Weight
CPI-TCA-**60M-40M**	**60mm**	[3.19] 81.0	[1.59] 40.5	[1.50] 38.0	[1.50] 38.0	[2.89 lb] 1.31 kg

Dimensions and technical information are subject to change without notice

T-CLAMP TRANSITION BRACKETS AND BLOCKS

Nominal (Ø) given
See chart on Page 72
for actual (Ø) size

Round Tooling | Dimensions | Technical Specifications

TCA Ø60mm/2.50" to Ø60mm/2.50" T-Clamp Bracket Assembly

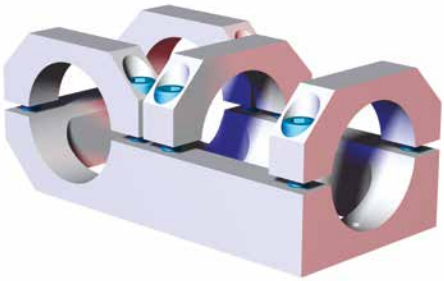

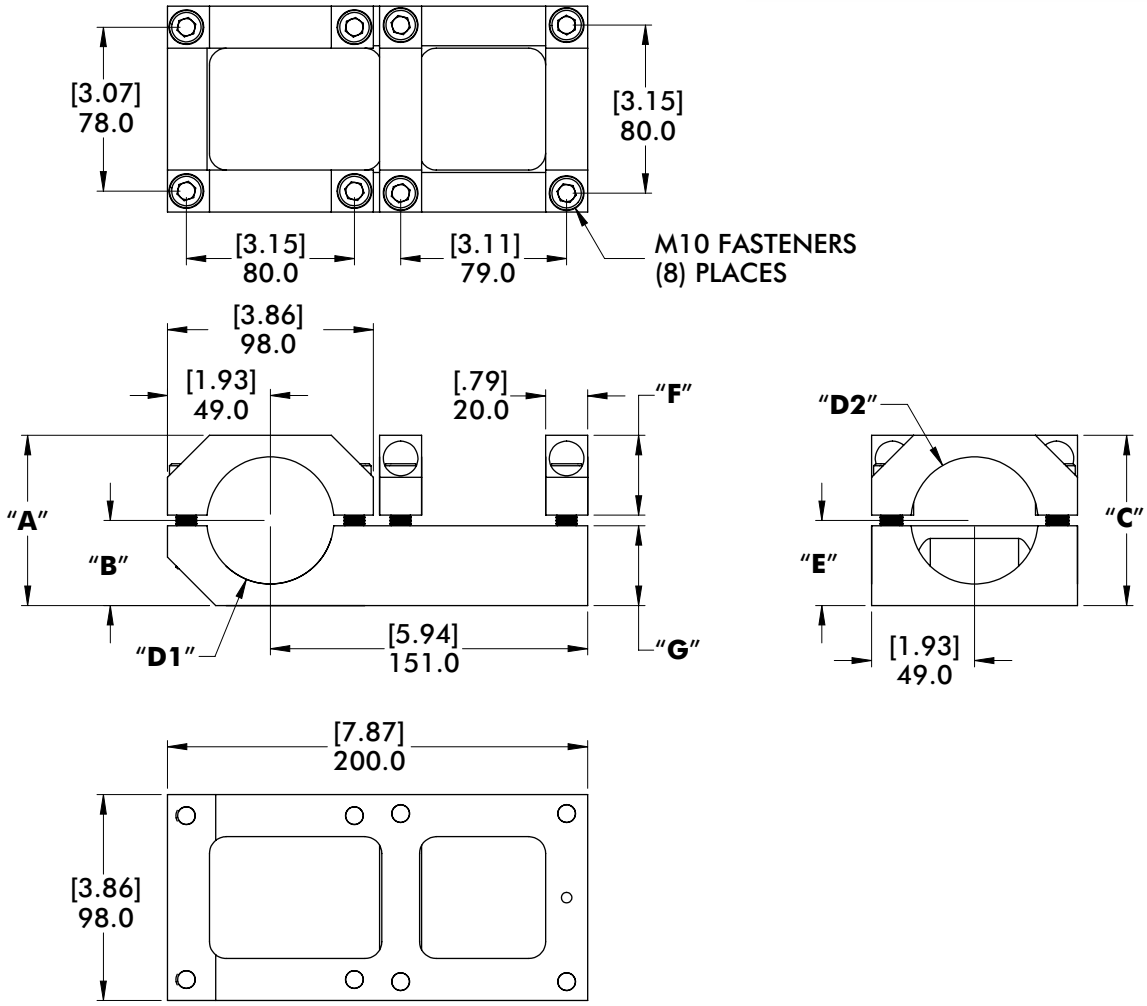

Specifications:
Max. Static Clamp Load:
813 N*m [600 ft-lb]
Material: Aluminum

Model Number	(Ø)"D1"	(Ø)"D2"	"A"	"B"	"C"	"E"	"F"	"G"	Weight
CPI-TCA-**60M-60M**	**60mm**	**60mm**	[3.19] 81.0	[1.59] 40.5	[3.19] 81.0	[1.59] 40.5	[1.50] 38.0	[1.50] 38.0	[3.15 lb] 1.43 kg
CPI-TCA-**250-250**	**2.50"**(in)	**2.50"**(in)	[3.35] 85.0	[1.67] 42.5	[3.35] 85.0	[4.67] 42.5	[1.57] 40.0	[1.57] 40.0	

WRIST CLAMPS

Round Tooling | Dimensions | Technical Specifications

Nominal (Ø) given
See chart on Page 72 for actual (Ø) size

SECM Ø20mm/.75" to Ø12mm/.50"

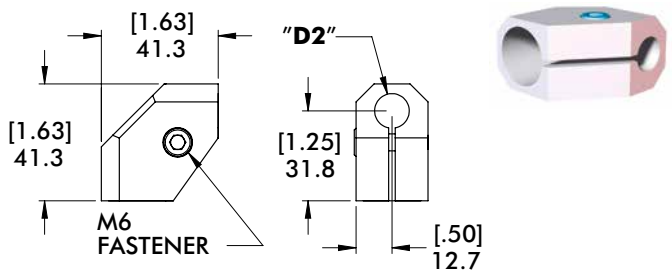

Specifications:
Max. Static Clamp Load:
Ø20mm/.75":
10.8 N*m [8 ft-lb]
Ø12mm/.50":
10.8 N*m [8 ft-lb]
Material: Aluminum

Model Number	(Ø)"D1"	(Ø)"D2"	Weight
CPI-SECM-**2012M**	**12mm**	**20mm**	[.12 lb] .05 kg
CPI-SECM-**7550**	**.50"**(in)	**.75"**(in)	

SECM Ø20mm/.75" to Ø20mm/.75"

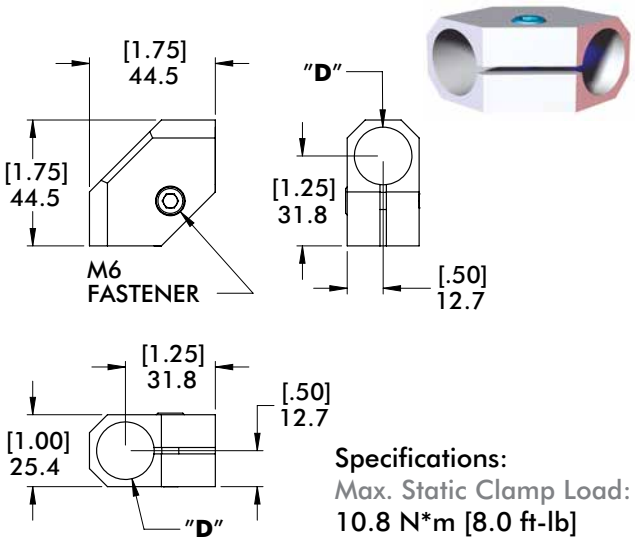

Specifications:
Max. Static Clamp Load:
10.8 N*m [8.0 ft-lb]
Material: Aluminum

Model Number	(Ø)"D"	Weight
CPI-SECM-**2020M**	**20mm**	[.12 lb] .06 kg
CPI-SECM-**7575**	**.75"**(in)	

SECM Ø25mm/1.00" to Ø20mm/.75"

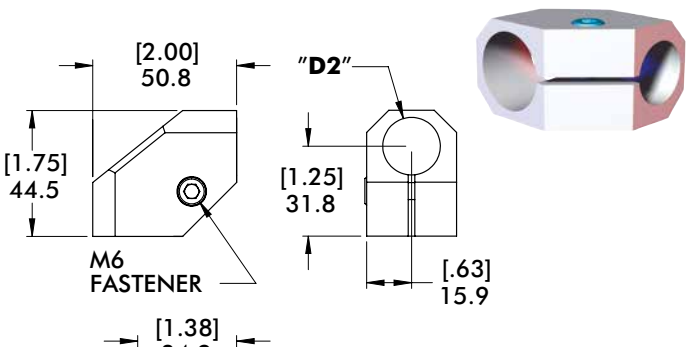

Specifications:
Max. Static Clamp Load:
Ø25mm/1.00":
13.6 N*m [10 ft-lb]
Ø20mm/.75":
10.8 N*m [8.0 ft-lb]
Material: Aluminum

Model Number	(Ø)"D1"	(Ø)"D2"	Weight
CPI-SECM-**2520M**	**25mm**	**20mm**	[.17 lb] .08 kg
CPI-SECM-**1075**	**1.00"**(in)	**.75"**(in)	

SECM Ø25mm/1.00" to Ø25mm/1.00"

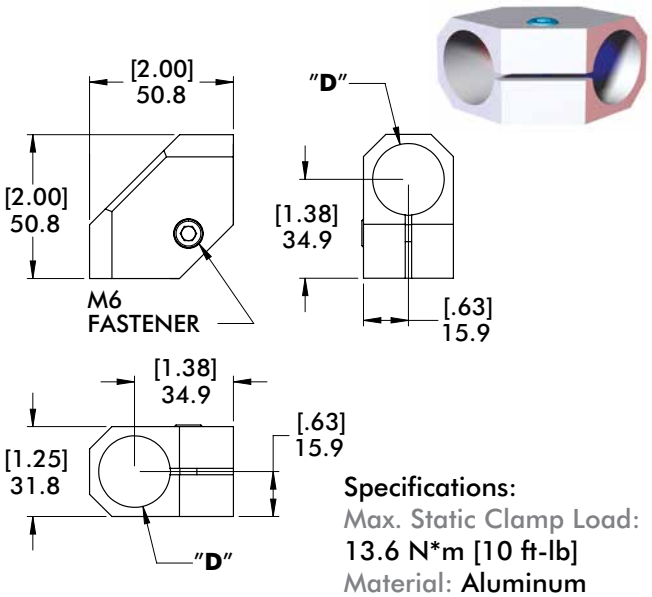

Specifications:
Max. Static Clamp Load:
13.6 N*m [10 ft-lb]
Material: Aluminum

Model Number	(Ø)"D"	Weight
CPI-SECM-**2525M**	**25mm**	[.17 lb] .08 kg
CPI-SECM-**1010**	**1.00"**(in)	

Dimensions and technical information are subject to change without notice

Nominal (Ø) given
See chart on Page 72
for actual (Ø) size

SEC/SLK Ø40mm/1.50" to Ø25mm/1.00"

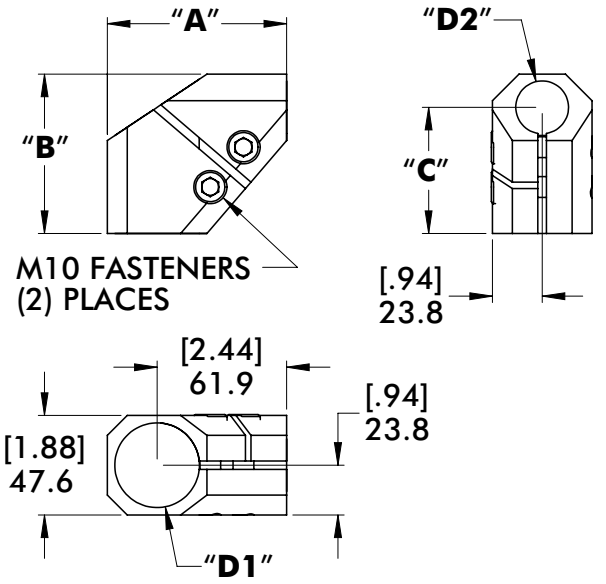

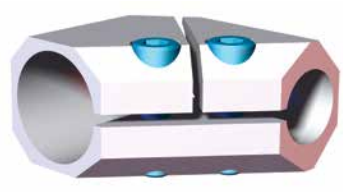

Specifications:
Max. Static Clamp Load:
Ø40mm/1.50":
271 N*m [200 ft-lb]
Ø25mm/1.00":
203 N*m [150 ft-lb]
Material: Aluminum

Model Number	(Ø)"D1"	(Ø)"D2"	"A"	"B"	"C"	"E"	Weight
CPI-**SEC-1510**	**1.50"**(in)	**1.00"**(in)	[3.25] 82.6	[2.38] 60.3	[1.75] 44.5	[.88] 22.2	[.67 lb] .31 kg
CPI-**SLK-4025**	**40mm**	**25mm**	[3.38] 85.7	[2.44] 61.9	[1.88] 47.6	[.94] 23.8	[.77 lb] .35 kg

OFFSET WRIST BRACKETS AND BLOCKS

Round Tooling | Dimensions | Technical Specifications

Nominal (Ø) given
See chart on Page 72 for actual (Ø) size

SEC/**SLK** Ø60mm/2.50" to Ø25mm/1.00" Wrist Bracket

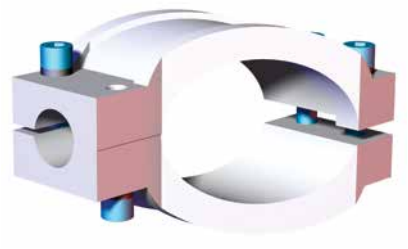

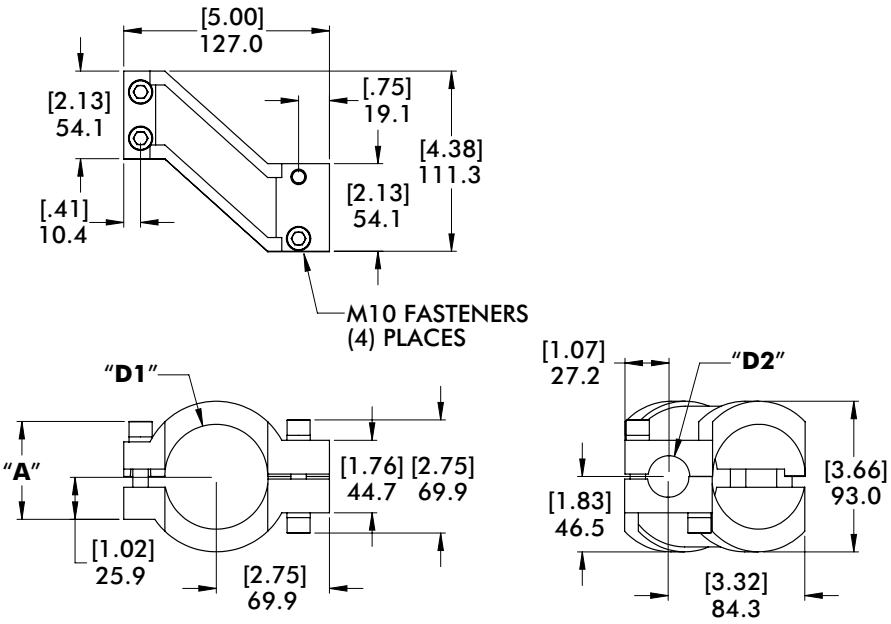

Specifications:
Max. Static Clamp Load:
Ø25mm/1.00":
149 N*m [110 ft-lb]
Ø60mm/2.50":
677 N*m [500 ft-lb]
Material: Aluminum

Model Number	(Ø)"**D1**"	(Ø)"**D2**"	"**A**"	Weight
CPI-**SLK-6025**	**60mm**	**25mm**	[2.25] 57.1	[1.72 lb] .78 kg
CPI-**SEC-2510**	**2.50"**(in)	**1.00"**(in)	[2.38] 60.5	[1.61 lb] .73 kg

SEC Ø2.50" to Ø1.50" Wrist Bracket

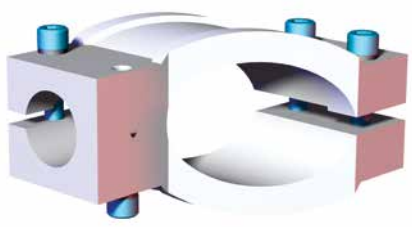

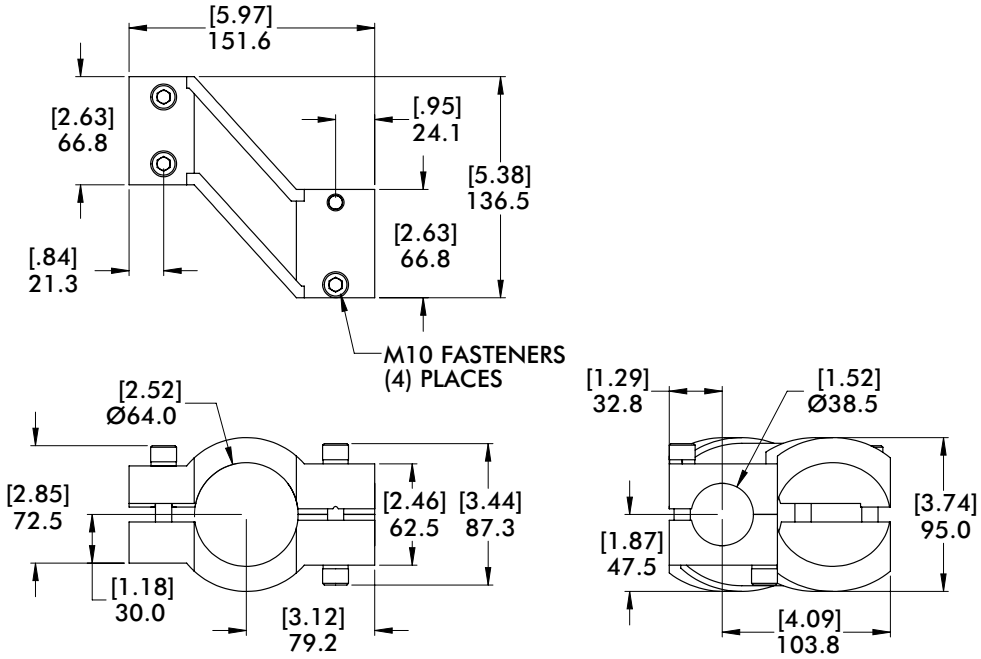

Specifications:
Max. Static Clamp Load:
Ø40mm/1.50":
271 N*m [200 ft-lb]
Ø60mm/2.50":
677 N*m [500 ft-lb]
Material: Aluminum

Model Number	Weight
CPI-**SEC-2515**	[2.72 lb] 1.23 kg

Dimensions and technical information are subject to change without notice

Nominal (Ø) given
See chart on Page 72
for actual (Ø) size

DC Ø25mm/1.00" to Ø25mm/1.00" 45° Elbow

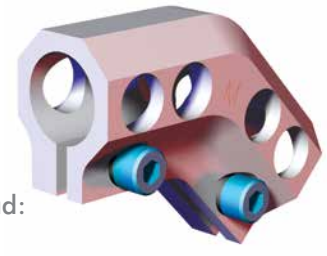

Specifications:
Max. Static Clamp Load:
203 N*m [150 ft-lb]
Material: Aluminum

Model Number	(Ø)"D"	Weight
CPI-DC-**2525M**-45	**25mm**	[.35 lb] .16 kg
CPI-DC-**1010**-45	**1.00"**(in)	

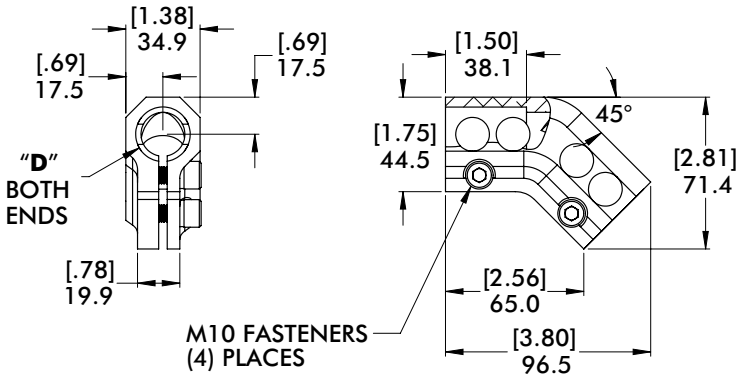

DC Ø1.50" to Ø1.50" 45° Elbow

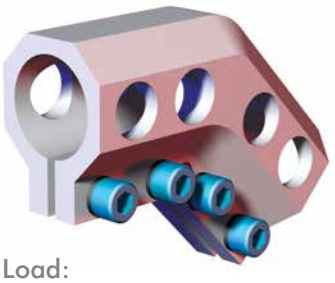

Specifications:
Max. Static Clamp Load:
271 N*m [200 ft-lb]
Material: Aluminum

Model Number	Weight
CPI-DC-**1515**-45	[1.41 lb] .64 kg

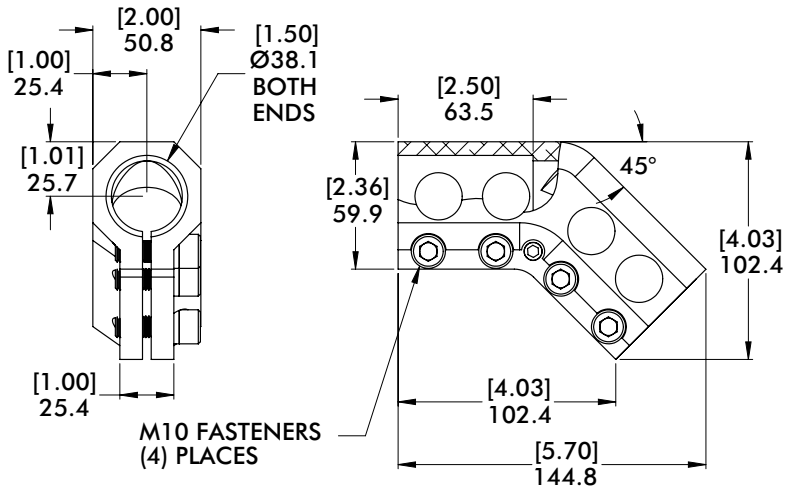

DC Ø40mm to Ø40mm 45° Elbow

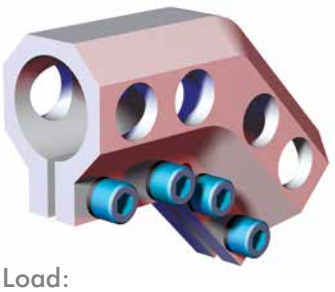

Specifications:
Max. Static Clamp Load:
271 N*m [200 ft-lb]
Material: Aluminum

Model Number	Weight
CPI-DC-**40-40**-45	[1.41 lb] .64 kg

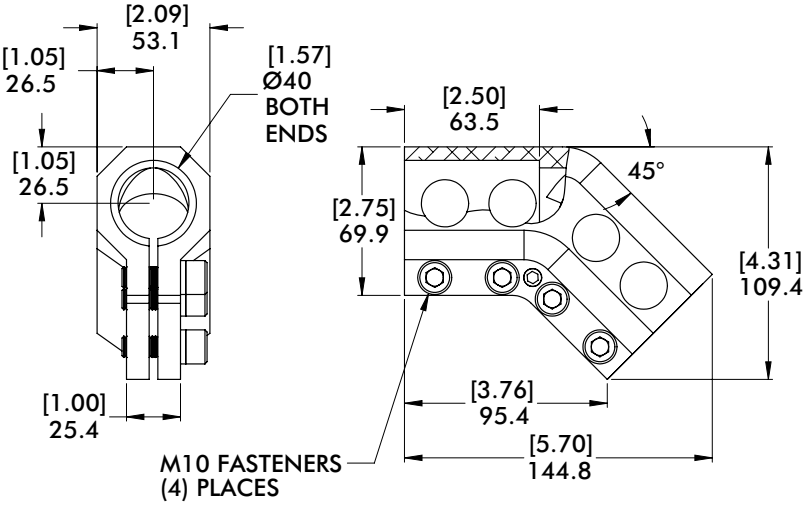

ELBOW AND STRAIGHT BRACKETS

Round Tooling | Dimensions | Technical Specifications

Nominal (Ø) given
See chart on Page 72 for actual (Ø) size

DC Ø60mm to Ø60mm 45° Elbow

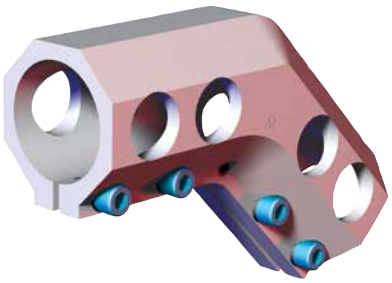

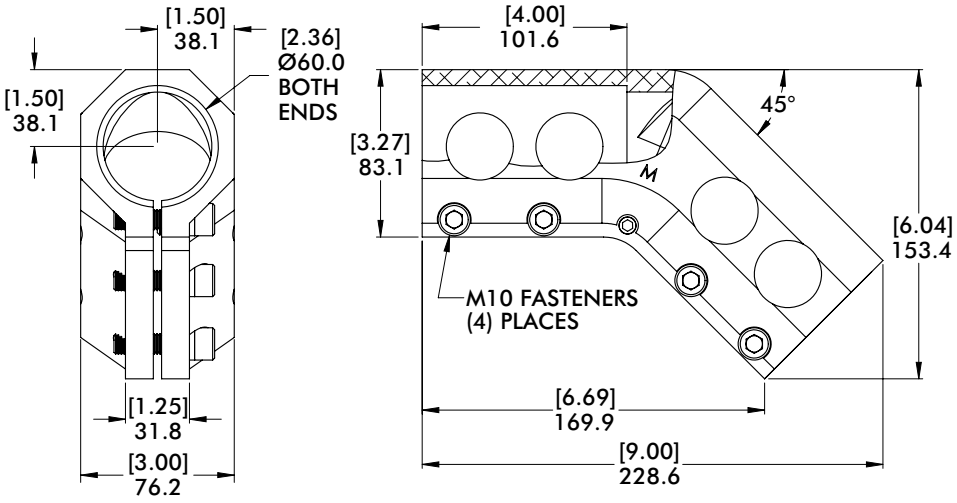

Specifications:
Max. Static Clamp Load:
677N*m [500 ft-lb]
Material: Aluminum

Model Number	Weight
CPI-DC-**6060M**-45	[2.94 lb] 1.33 kg

DC Ø2.50" to Ø2.50" 45° Elbow

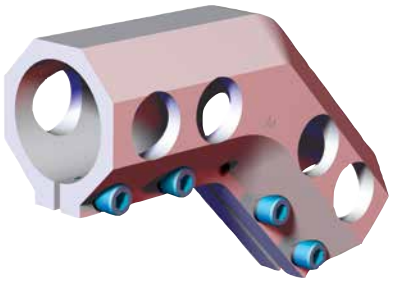

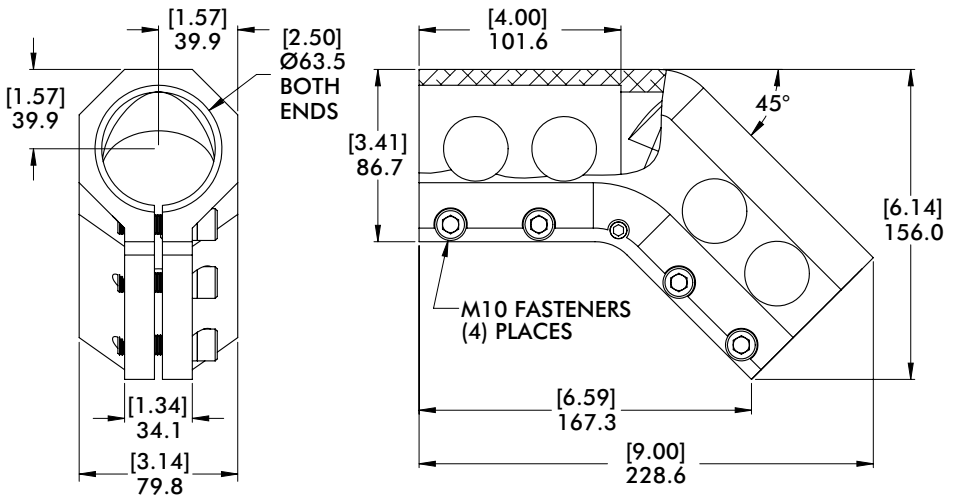

Specifications:
Max. Static Clamp Load:
677 N*m [500 ft-lb]
Material: Aluminum

Model Number	Weight
CPI-DC-**2525**-45	[3.19 lb] 1.46 kg

DC Ø25mm/1.00" to Ø25mm/1.00" Straight with Swivel



Specifications:
Max. Static Clamp Load:
203 N*m [150 ft-lb]
Material: Aluminum

Model Number	(Ø)"**D**"	(Ø)"**S**"	Weight
CPI-DC-**2525S**-8	**25mm**	**25mm**	[.80 lb] .36 kg
CPI-DC-**1010S**-8	**1.00"**(in)	**1.00"**(in)	

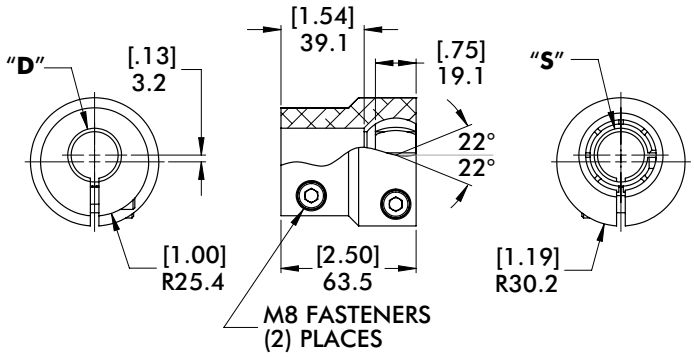

Dimensions and technical information are subject to change without notice

AC-SA Series Accessory Mount Swivel Arms

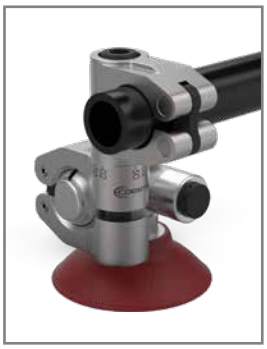

Features:

- Fixed adjustment every 90 degrees
- Mounts to a 1 inch or 25mm tube
- Clamps to a Ø28.6mm [1.125"] (B112) Spherical Ball



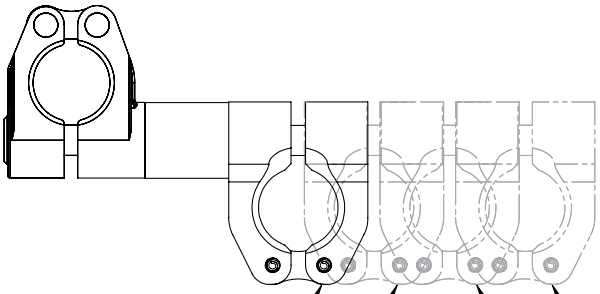

AC-SA10-100-B112-03
AC-SA25-25M-B112-75

AC-SA10-100-B112-04
AC-SA25-25M-B112-100

AC-SA10-100-B112-06
AC-SA25-25M-B112-150

AC-SA10-100-B112-05
AC-SA25-25M-B112-125

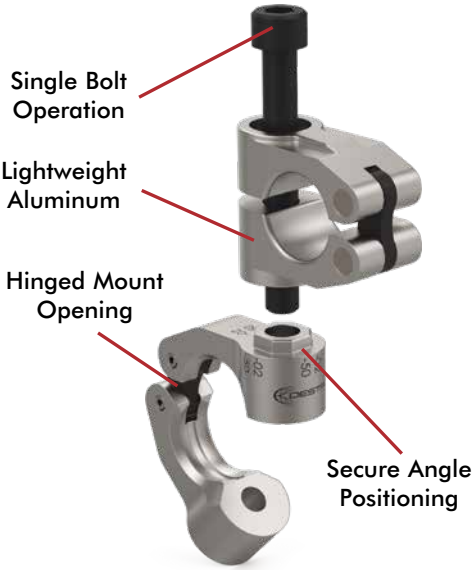

AC-SA10-100-B112-02
AC-SA25-25M-B112-50

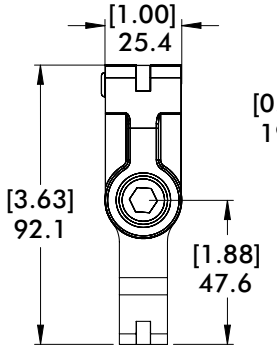

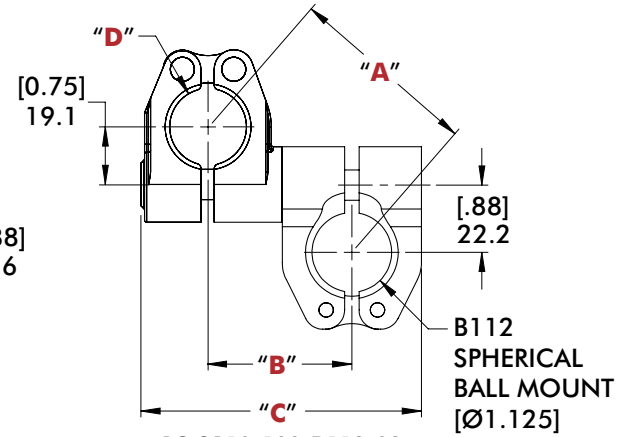

AC-SA10-100-B112-02
AC-SA25-25M-B112-50



0 degree



90 degree



180 degree



270 degree

Specifications:
Maximum Clamp Load:
111 ft-lb [150 Nm]
Material:
Aluminum

Model Number	"A"	"B"	"C"	(Ø)"D"	Weight
AC-SA**10-100-B112-02**	[2.48] 63	[1.87] 47.5	[3.65] 92.8	**1.00"(in)**	[0.53 lb] 0.24kg
AC-SA**25-25M-B112-50**				**25mm**	
AC-SA**10-100-B112-03**	[3.37] 85.6	[2.95] 75.0	[4.74] 120.3	**1.00"(in)**	[0.64 lb] 0.29kg
AC-SA**25-25M-B112-75**				**25mm**	
AC-SA**10-100-B112-04**	[4.26] 108.2	[3.94] 100.0	[5.72] 145.3	**1.00"(in)**	[0.73 lb] 0.33kg
AC-SA**25-25M-B112-100**				**25mm**	
AC-SA**10-100-B112-05**	[5.18] 131.6	[4.92] 125.0	[6.70] 170.3	**1.00"(in)**	[0.82 lb] 0.37 kg
AC-SA**25-25M-B112-125**				**25mm**	
AC-SA**10-100-B112-06**	[6.12] 155.4	[5.90] 150.0	[7.69] 195.5	**1.00"(in)**	[0.93 lb] 0.42kg
AC-SA**25-25M-B112-150**				**25mm**	

EXTEND-ARM SWIVEL ARMS

Round Tooling | Dimensions | Technical Specifications



Features:

- Mounts apple core accessories to Ø25mm/1.00" round tube
- 50.8 [2.00] linear extension allows for precise adjustment
- Provides 360° of rotational adjustments along (3) axes
- Used to mount venturi, bumpers, round locators, and proximity switches

Specifications:
Maximum Clamp Load:
140 ft-lb [190 Nm]
Material:
Body and Insert:
Machined Aluminum
End:
Cast Aluminum

TSA Ø25mm/1.00" for Ø19mm [.75"] Apple Core

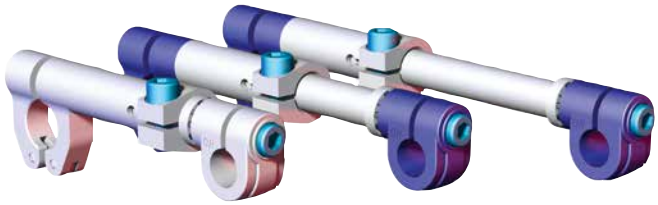



Double-hinge design allows swivel arm to be mounted directly onto boom/tube and slid into position, without having to remove existing components to slide on from boom/tube end.

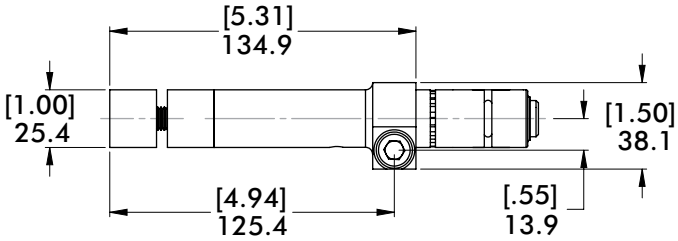

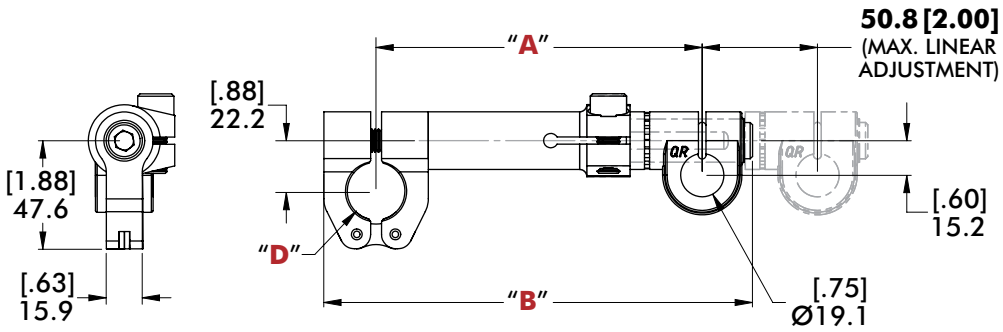

Model Number	(Ø)"D"	"A"	"B"	Weight	FINISH
CPI-**55-1**-TSA	**1.00"**(in)	[5.66] 143.7	[7.44] 188.9	[0.83 lb] 0.38 kg	SILVER
CPI-**140-25**-TSA	**25mm**				BLUE
CPI-**75-1**-TSA	**1.00"**(in)	[7.66] 194.5	[9.44] 239.7	[0.90 lb] 0.41 kg	SILVER
CPI-**190-25**-TSA	**25mm**				BLUE
CPI-**95-1**-TSA	**1.00"**(in)	[9.66] 245.3	[11.44] 290.5	[0.98 lb] 0.44 kg	SILVER
CPI-**240-25**-TSA	**25mm**				BLUE

EXTEND-ARM SWIVEL ARMS

Round Tooling | Dimensions | Technical Specifications

Features:
- Mounts apple core accessories to Ø40mm/1.50" round tube
- 50.8 [2.00] linear extension allows for precise adjustment
- Provides 360° of rotational adjustments along (3) axes
- Used to mount venturi, bumpers, round locators, and proximity switches

Specifications:
Maximum Clamp Load:
140 ft-lb [190 Nm]
Material:
Body and Insert:
Machined Aluminum
End:
Cast Aluminum



TSA Ø40mm/1.50" for Ø19mm [.75"] Apple Core

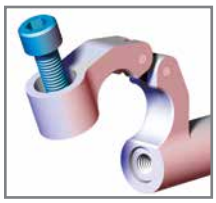

Double-hinge design allows swivel arm to be mounted directly onto boom/tube and slid into position, without having to remove existing components to slide on from boom/tube end.

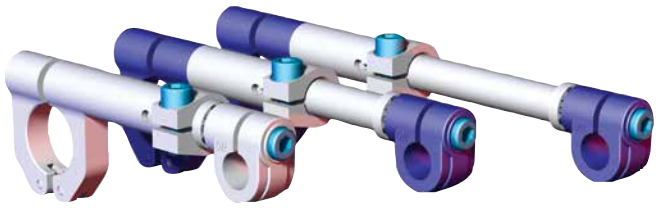

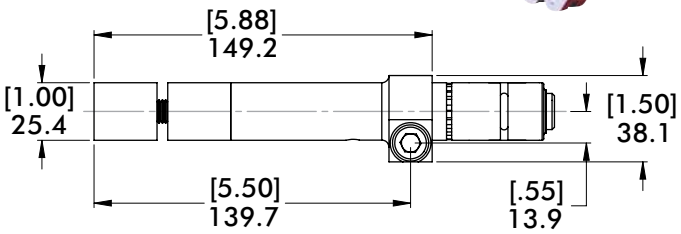

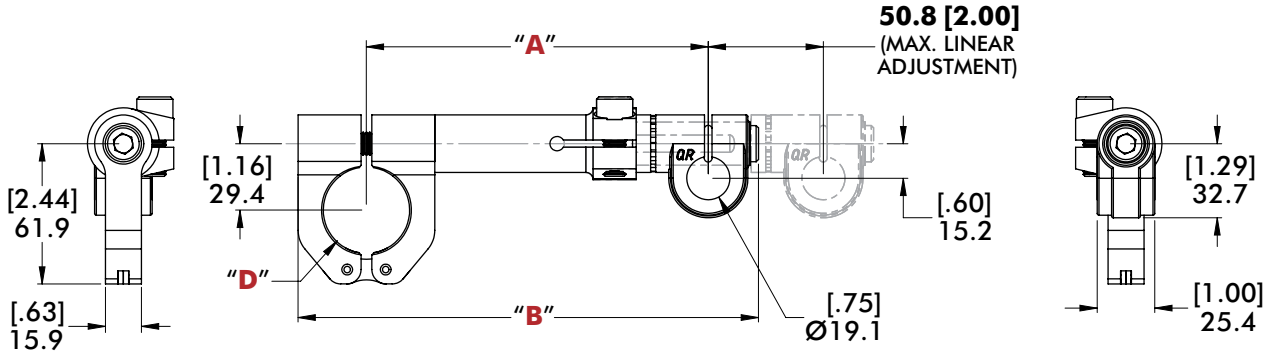

Model Number	(Ø)"D"	"A"	"B"	Weight	FINISH
CPI-**55-150**-TSA	**1.50"**(in)	[5.94] 150.9	[8.00] 203.2	[0.99 lb] 0.45 kg	SILVER
CPI-**140-40**-TSA	**40mm**				BLUE
CPI-**75-150**-TSA	**1.50"**(in)	[7.94] 201.7	[10.00] 254.0	[1.06 lb] 0.48 kg	SILVER
CPI-**190-40**-TSA	**40mm**				BLUE
CPI-**95-150**-TSA	**1.50"**(in)	[9.94] 252.5	[12.00] 304.8	[1.13 lb] 0.51 kg	SILVER
CPI-**240-40**-TSA	**40mm**				BLUE

EXTEND-ARM SWIVEL ARMS

Round Tooling | Dimensions | Technical Specifications

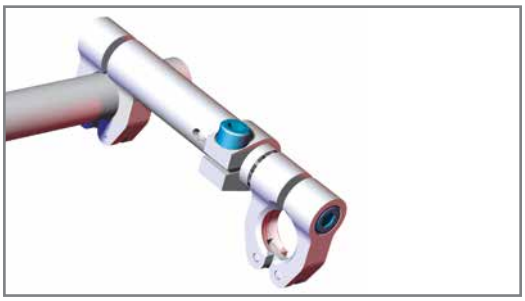

Features:

- Mounts swivel ball accessories to Ø25mm/1.00" round tube
- 50.8 [2.00] linear extension allows for precise adjustment
- Provides 360° of rotational adjustments along (3) axes
- Used to mount venturi, bumpers, round locators, and proximity switches

Specifications:
Maximum Clamp Load:
140 ft-lb [190 Nm]
Material:
Body and Insert:
Machined Aluminum
End:
Cast Aluminum

TSA-B112 Ø25mm/1.00" for Ø28.6mm [1.125"] Spherical Swivel Ball

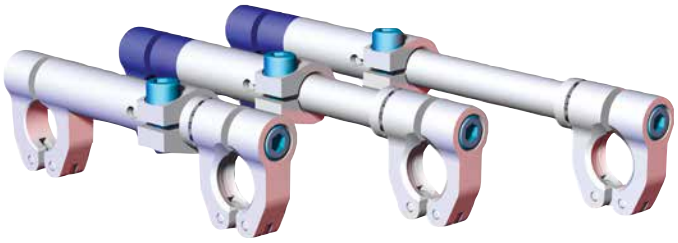



Double-hinge design allows swivel arm to be mounted directly onto boom/tube and slid into position, without having to remove existing components to slide on from boom/tube end.

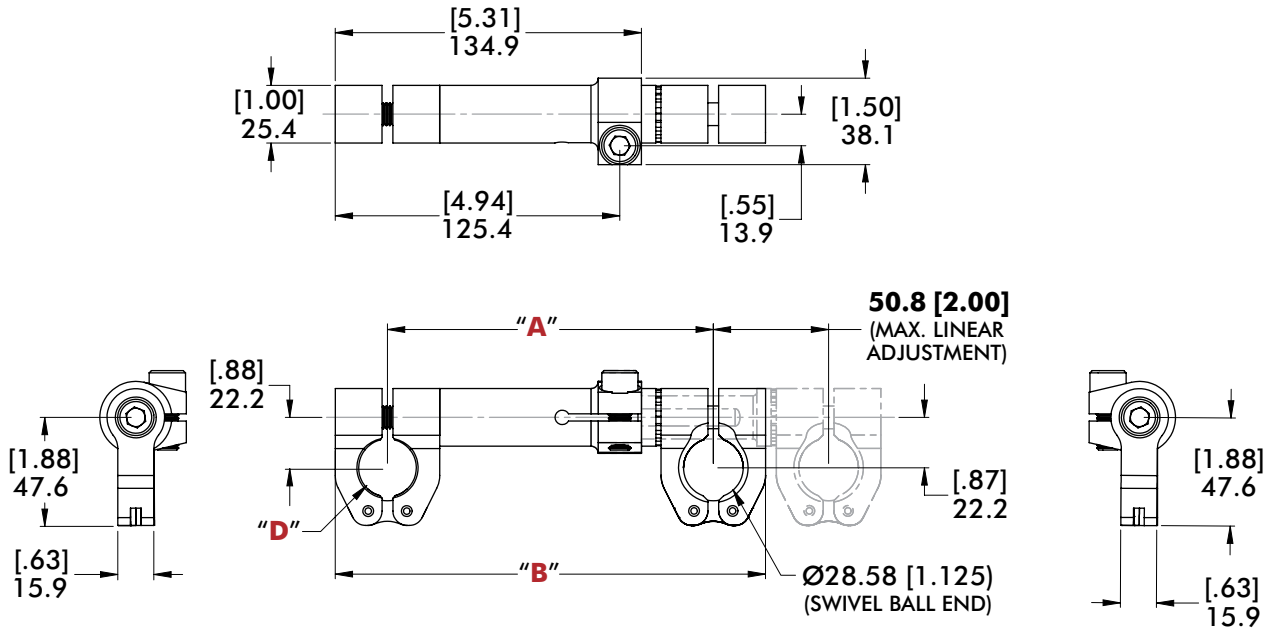

Model Number	(Ø)"D"	"A"	"B"	Weight	FINISH
CPI-**55-1**-TSA-B112	**1.00"**(in)	[5.65] 143.6	[7.47] 189.6	[0.93 lb] 0.42 kg	SILVER
CPI-**140-25**-TSA-B112	**25mm**				BLUE
CPI-**75-1**-TSA-B112	**1.00"**(in)	[7.65] 194.4	[9.47] 240.4	[1.00 lb] 0.45 kg	SILVER
CPI-**190-25**-TSA-B112	**25mm**				BLUE
CPI-**95-1**-TSA-B112	**1.00"**(in)	[9.65] 245.2	[11.47] 291.2	[1.07 lb] 0.49 kg	SILVER
CPI-**240-25**-TSA-B112	**25mm**				BLUE

Dimensions and technical information are subject to change without notice

EXTEND-ARM SWIVEL ARMS

Round Tooling | Dimensions | Technical Specifications

Features:
- Mounts swivel ball accessories to Ø40mm/1.50" round tube
- 50.8 [2.00] linear extension allows for precise adjustment
- Provides 360° of rotational adjustments along (3) axes
- Used to mount venturi, bumpers, round locators, and proximity switches

Specifications:
Maximum Clamp Load:
140 ft-lb [190 Nm]
Material:
Body and Insert:
Machined Aluminum
End:
Cast Aluminum

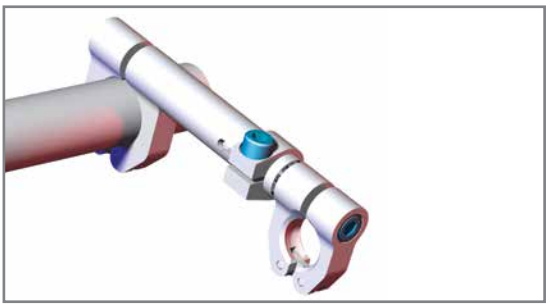

TSA-B112 Ø40mm/1.50" for Ø28.6mm [1.125"] Spherical Swivel Ball



Double-hinge design allows swivel arm to be mounted directly onto boom/tube and slid into position, without having to remove existing components to slide on from boom/tube end.

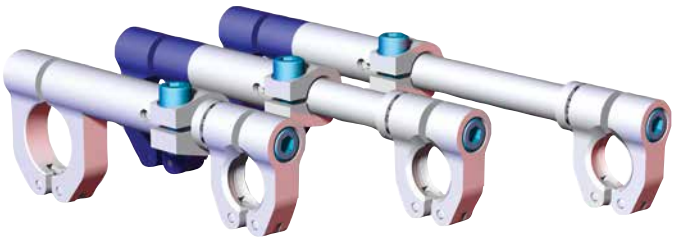

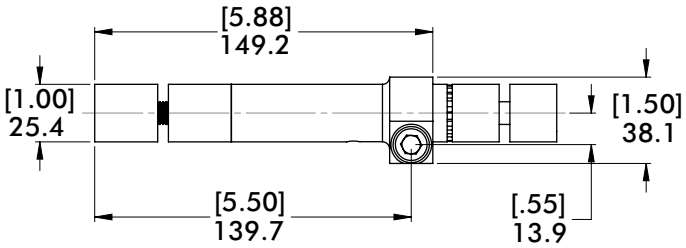

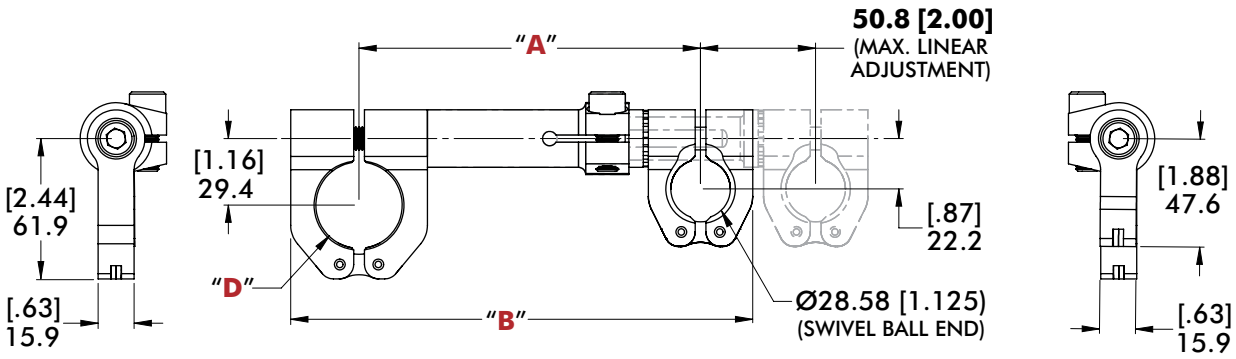

Model Number	(Ø)"D"	"A"	"B"	Weight	FINISH
CPI-**55-150**-TSA-B112	**1.50"**(in)	[5.93] 150.7	[8.03] 203.9	[1.03 lb] 0.47 kg	SILVER
CPI-**140-40**-TSA-B112	**40mm**				BLUE
CPI-**75-150**-TSA-B112	**1.50"**(in)	[7.93] 201.5	[10.03] 254.7	[1.10 lb] 0.50 kg	SILVER
CPI-**190-40**-TSA-B112	**40mm**				BLUE
CPI-**95-150**-TSA-B112	**1.50"**(in)	[9.93] 252.3	[12.03] 305.5	[1.17 lb] 0.53 kg	SILVER
CPI-**240-40**-TSA-B112	**40mm**				BLUE

MICRO TOOLING SWIVEL ARMS

Round Tooling | Dimensions | Technical Specifications

Nominal (Ø) given
See chart on Page 72 for actual (Ø) size

Features:
- Mounts micro apple core accessories to Ø20mm/.75" Round tube.
- Provides 360° of rotational adjustments along (3) axes.
- Used to mount venturi, bumpers, round locators, and proximity switches.

Specifications:
Maximum Clamp Load:
120 ft-lb [163 Nm]
Material:
Body and Spacer:
Machined Aluminum

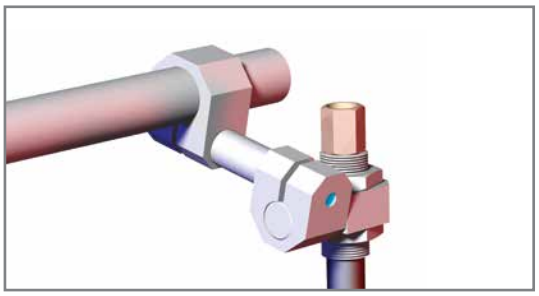

MSA Ø20mm/.75" for Ø12.7mm [.50"] Apple Core (Micro)

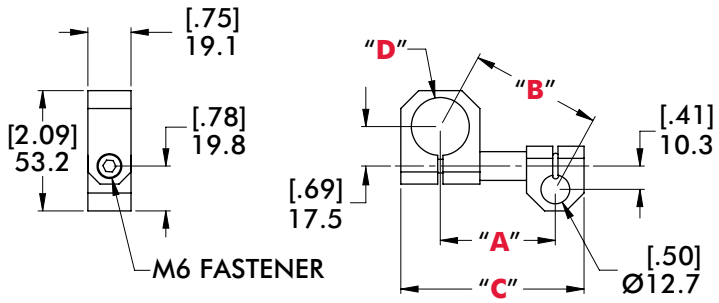

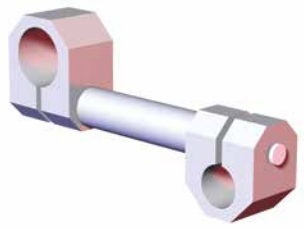

Model Number	(Ø)"D"	"A"	"B"	"C"	Weight
CPI-**200-7550**-MSA	**.75"**(in)	[2.00] 50.8	[2.28] 57.9	[3.19] 81.0	[0.16 lb] 0.07kg
CPI-**200-20M50**-MSA	**20mm**				
CPI-**300-7550**-MSA	**.75"**(in)	[3.00] 76.2	[3.19] 81.1	[4.19] 106.4	[0.19 lb] 0.08kg
CPI-**300-20M50**-MSA	**20mm**				
CPI-**400-7550**-MSA	**.75"**(in)	[4.00] 101.7	[4.15] 105.4	[5.19] 131.9	[0.21 lb] 0.09kg
CPI-**400-20M50**-MSA	**20mm**				
CPI-**500-7550**-MSA	**.75"**(in)	[5.00] 127.1	[5.12] 130.1	[6.19] 157.3	[0.23 lb] 0.11kg
CPI-**500-20M50**-MSA	**20mm**				
CPI-**600-7550**-MSA	**.75"**(in)	[6.00] 152.5	[6.10] 155.0	[7.19] 182.7	[0.26 lb] 0.12kg
CPI-**600-20M50**-MSA	**20mm**				

Dimensions and technical information are subject to change without notice

MICRO TOOLING SWIVEL ARMS

Round Tooling | Dimensions | Technical Specifications

Nominal (Ø) given
See chart on Page 72
for actual (Ø) size

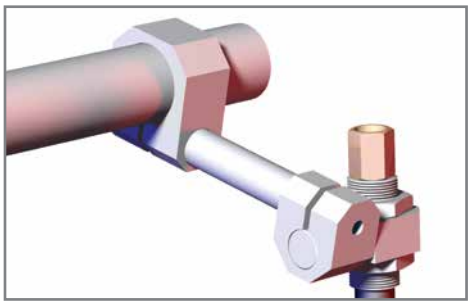

Features:
- Mounts micro apple core accessories to Ø25mm/1.00" Round tube
- Provides 360° of rotational adjustments along (3) axes
- Used to mount venturi, bumpers, round locators, and proximity switches

Specifications:
Maximum Clamp Load:
120 ft-lb [163 Nm]
Material:
Body and Spacer:
Machined Aluminum

MSA Ø25mm/1.00" for Ø12.7mm [.50"] Apple Core (Micro)

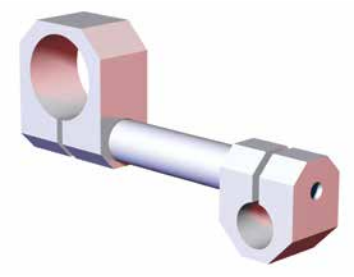

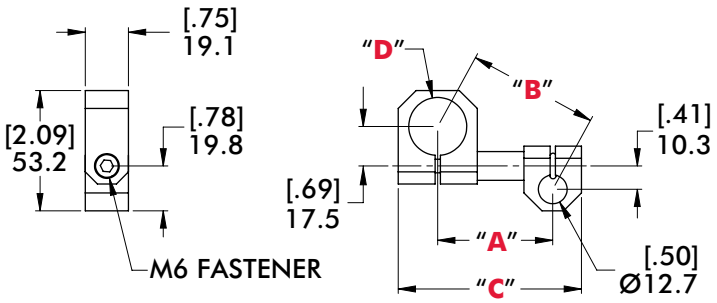

Model Number	(Ø)"D"	"A"	"B"	"C"	Weight
CPI-**200-1050**-MSA	**1.00"**(in)	[2.00] 50.7	[2.23] 56.6	[3.06] 77.7	[0.18 lb] 0.08kg
CPI-**200-25M50**-MSA	**25mm**				
CPI-**300-1050**-MSA	**1.00"**(in)	[3.00] 76.1	[3.16] 80.2	[4.11] 104.4	[0.21 lb] 0.09kg
CPI-**300-25M50**-MSA	**25mm**				
CPI-**300-30B50**-MSA	**30mm**				
CPI-**400-1050**-MSA	**1.00"**(in)	[4.00] 101.6	[4.12] 104.7	[5.08] 129.0	[0.23 lb] 0.10kg
CPI-**400-25M50**-MSA	**25mm**				
CPI-**400-30B50**-MSA	**30mm**				
CPI-**500-1050**-MSA	**1.00"**(in)	[5.00] 127.0	[5.10] 129.5	[6.14] 156.0	[0.25 lb] 0.11kg
CPI-**500-25M50**-MSA	**25mm**				
CPI-**500-30B50**-MSA	**30mm**				
CPI-**600-1050**-MSA	**1.00"**(in)	[6.00] 152.4	[6.08] 154.4	[7.09] 180.0	[0.27 lb] 0.13kg
CPI-**600-25M50**-MSA	**25mm**				
CPI-**600-30B50**-MSA	**30mm**				

STANDARD SWIVEL ARMS

Round Tooling | Dimensions | Technical Specifications



Features:

- Mounts apple core accessories to Ø25mm/1.00" round tube
- Provides 360° of rotational adjustments along (3) axes
- Used to mount venturi, bumpers, round locators, and proximity switches

Specifications:
Maximum Clamp Load:
200 ft-lb [271 Nm]
Material:
Body:
Cast Aluminum
Spacer:
Machined Aluminum

SA Ø25mm/1.00" for Ø19.1mm [.75"] Apple Core



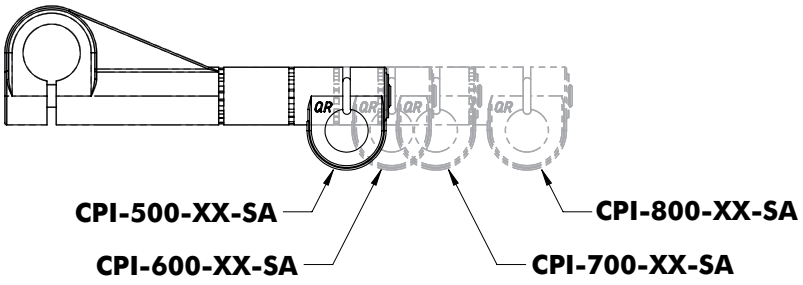

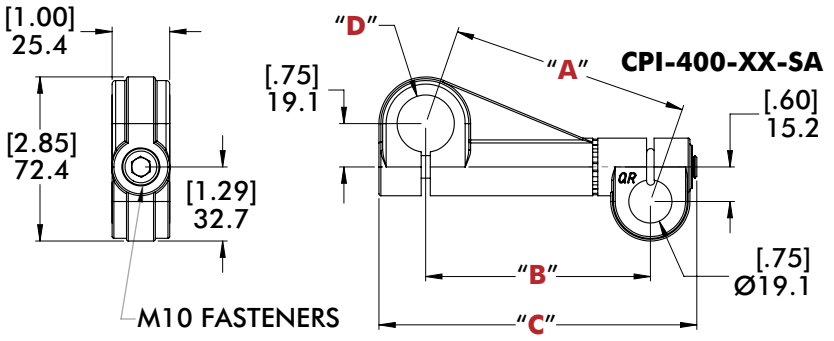



Model Number	(Ø)"D"	"A"	"B"	"C"	Weight	FINISH
CPI-**400-1**-SA	**1.00"**(in)	[4.13] 104.9	[3.90] 99.1	[5.52] 140.2	[0.70 lb] 0.31 kg	SILVER
CPI-**100-25**-SA	**25mm**					BLUE
CPI-**500-1**-SA	**1.00"**(in)	[5.30] 134.5	[5.12] 130.1	[6.70] 170.2	[0.82 lb] 0.37 kg	SILVER
CPI-**140-25**-SA	**25mm**					BLUE
CPI-**600-1**-SA	**1.00"**(in)	[6.05] 153.8	[5.90] 149.9	[7.49] 190.2	[0.90 lb] 0.41 kg	SILVER
CPI-**160-25**-SA	**25mm**					BLUE
CPI-**700-1**-SA	**1.00"**(in)	[6.81] 172.9	[6.67] 169.4	[8.27] 210.2	[0.97 lb] 0.44 kg	SILVER
CPI-**180-25**-SA	**25mm**					BLUE
CPI-**800-1**-SA	**1.00"**(in)	[8.36] 212.4	[8.25] 209.6	[9.85] 250.2	[1.13 lb] 0.51 kg	SILVER
CPI-**200-25**-SA	**25mm**					BLUE

Dimensions and technical information are subject to change without notice

STANDARD SWIVEL ARMS

Round Tooling | Dimensions | Technical Specifications

Features:

- Mounts apple core accessories to Ø40mm/1.50" round tube
- Provides 360° of rotational adjustments along (3) axes
- Used to mount venturi, bumpers, round locators, and proximity switches

Specifications:
Maximum Clamp Load:
200 ft-lb [271 Nm]
Material:
Body:
Cast Aluminum
Spacer:
Machined Aluminum

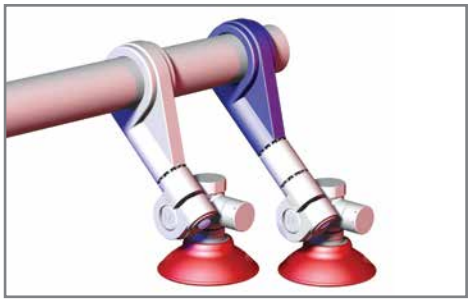

SA Ø40mm/1.50" for Ø19.1mm [.75"] Apple Core

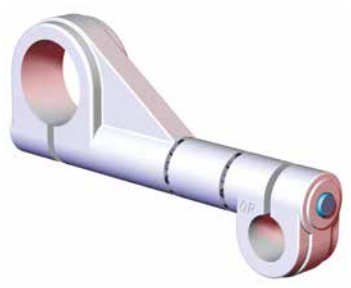

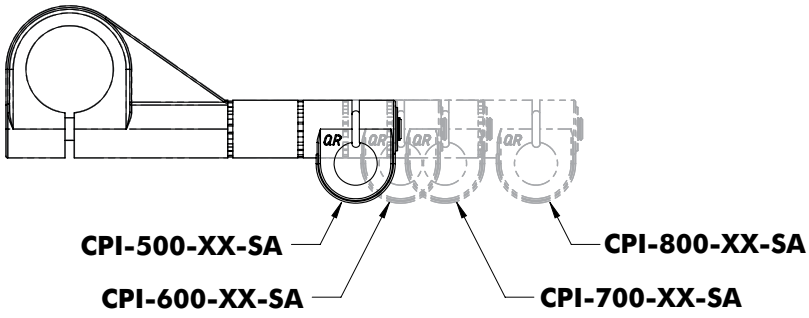

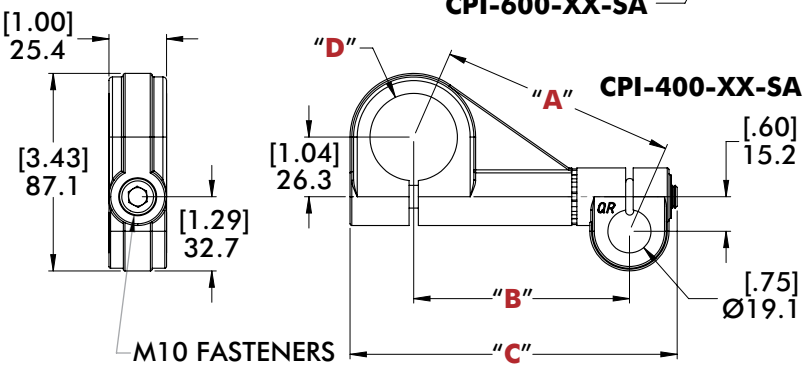



Model Number	(Ø)"D"	"A"	"B"	"C"	Weight	FINISH
CPI-**400-15**-SA	**1.50"**(in)	[4.09] 103.8	[3.75] 95.2	[5.68] 144.3	[0.78 lb] 0.35 kg	SILVER
CPI-**100-40**-SA	**40mm**					BLUE
CPI-**500-15**-SA	**1.50"**(in)	[5.23] 132.8	[4.97] 126.1	[6.86] 174.3	[0.89 lb] 0.41 kg	SILVER
CPI-**140-40**-SA	**40mm**					BLUE
CPI-**600-15**-SA	**1.50"**(in)	[5.97] 151.8	[5.75] 146.0	[7.65] 194.3	[0.97 lb] 0.44 kg	SILVER
CPI-**160-40**-SA	**40mm**					BLUE
CPI-**700-15**-SA	**1.50"**(in)	[6.72] 170.7	[6.52] 165.5	[8.44] 214.3	[1.05 lb] 0.54 kg	SILVER
CPI-**180-40-SA**-SA	**40mm**					BLUE
CPI-**800-15**-SA	**1.50"**(in)	[8.26] 209.8	[8.10] 205.6	[10.01] 2.54	[1.20 lb] 0.55 kg	SILVER
CPI-**200-40**-SA	**40mm**					BLUE

STANDARD SWIVEL ARMS

Round Tooling | Dimensions | Technical Specifications

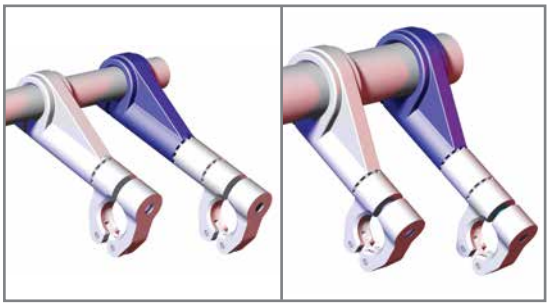

Features:

- Mounts swivel ball accessories to round tube
- Provides 360° of rotational adjustments along (3) axes
- Used to mount venturi, bumpers, round locators, and proximity switches

Specifications:
Maximum Clamp Load:
200 ft-lb [271 Nm]
Material:
Body:
Cast Aluminum
Spacer:
Machined Aluminum

SA-B112 Ø25mm/1.00" for Ø28.6mm [1.125"] Spherical Swivel Ball

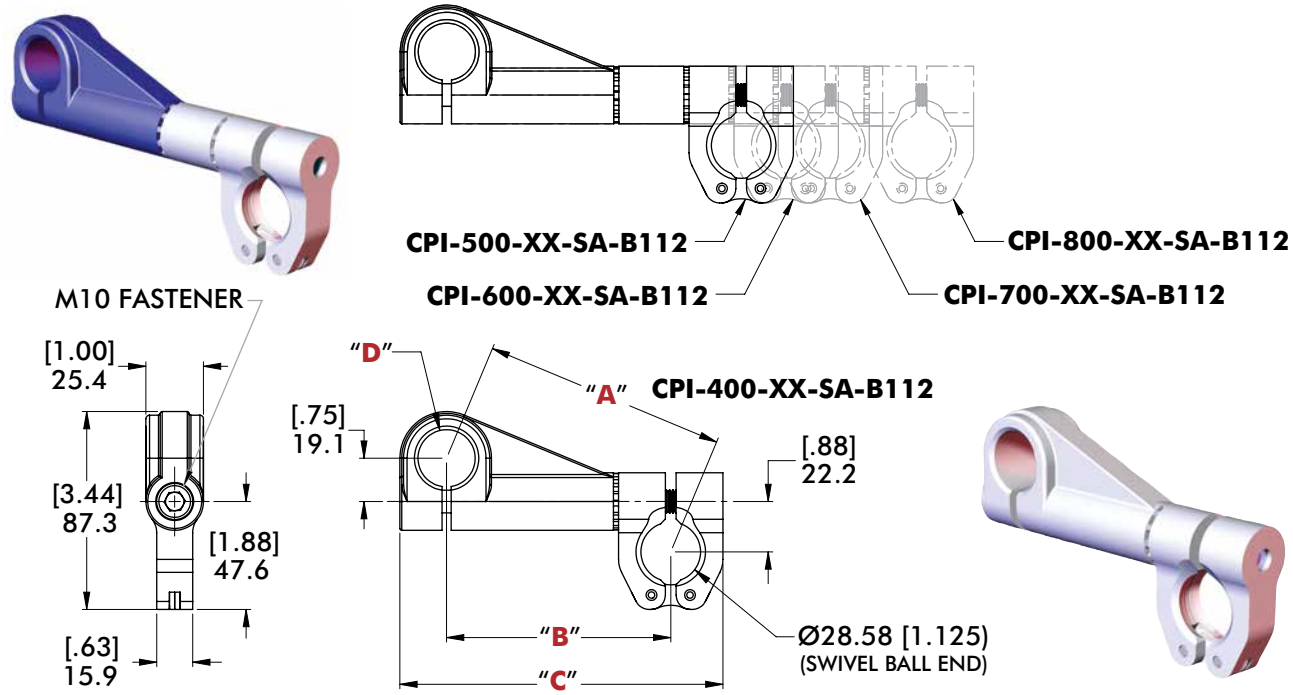

Model Number	(Ø)"D"	"A"	"B"	"C"	Weight	FINISH
CPI-**400-1**-SA-B112	**1.00"**(in)	[4.22] 107.2	[3.90] 98.9	[5.61] 142.6	[0.74 lb] 0.34 kg	SILVER
CPI-**100-25**-SA-B112	**25mm**					BLUE
CPI-**500-1**-SA-B112	**1.00"**(in)	[5.37] 136.3	[5.12] 129.9	[6.83] 173.5	[0.86 lb] 0.39 kg	SILVER
CPI-**140-25**-SA-B112	**25mm**					BLUE
CPI-**600-1**-SA-B112	**1.00"**(in)	[6.12] 155.3	[5.90] 149.7	[7.61] 193.4	[0.94 lb] 0.43 kg	SILVER
CPI-**160-25**-SA-B112	**25mm**					BLUE
CPI-**700-1**-SA-B112	**1.00"**(in)	[6.86] 174.3	[6.67] 169.3	[8.38] 212.9	[1.02 lb] 0.46 kg	SILVER
CPI-**180-25**-SA-B112	**25mm**					BLUE
CPI-**800-1**-SA-B112	**1.00"**(in)	[8.40] 213.5	[8.25] 209.4	[9.96] 253.0	[1.17 lb] 0.53 kg	SILVER
CPI-**200-25**-SA-B112	**25mm**					BLUE

STANDARD SWIVEL ARMS

Round Tooling | Dimensions | Technical Specifications

SA-B112 Ø40mm/1.50" for Ø28.6mm [1.125"] Spherical Swivel Ball

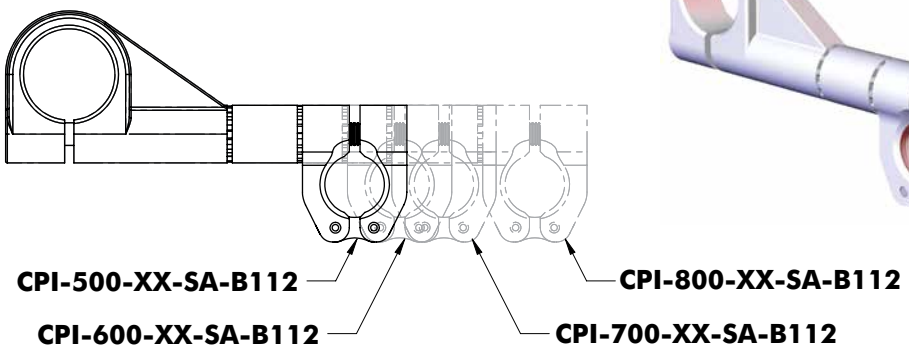

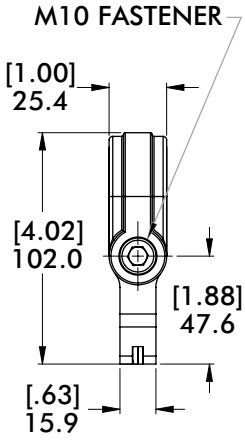

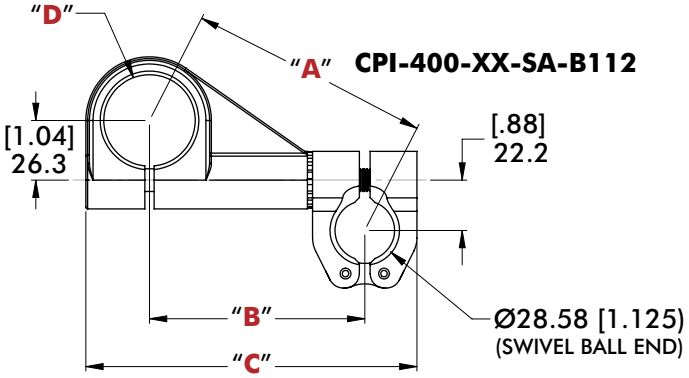



Model Number	(Ø)"D"	"A"	"B"	"C"	Weight	FINISH
CPI-**400-15**-SA-B112	**1.50"**(in)	[4.20] 106.7	[3.74] 95.0	[5.75] 146.1	[0.82 lb] 0.37 kg	SILVER
CPI-**100-40**-SA-B112	**40mm**					BLUE
CPI-**500-15**-SA-B112	**1.50"**(in)	[5.32] 135.0	[4.96] 126.0	[6.97] 177.1	[0.94 lb] 0.42 kg	SILVER
CPI-**140-40**-SA-B112	**40mm**					BLUE
CPI-**600-15**-SA-B112	**1.50"**(in)	[6.05] 153.7	[5.74] 145.8	[7.75] 196.9	[1.02 lb] 0.46 kg	SILVER
CPI-**160-40**-SA-B112	**40mm**					BLUE
CPI-**700-15**-SA-B112	**1.50"**(in)	[6.78] 172.3	[6.51] 165.4	[8.52] 216.5	[1.09 lb] 0.50 kg	SILVER
CPI-**180-40**-SA-B112	**40mm**					BLUE
CPI-**800-15**-SA-B112	**1.50"**(in)	[8.31] 211.1	[8.09] 205.5	[10.10] 256.6	[1.25 lb] 0.56 kg	SILVER
CPI-**200-40**-SA-B112	**40mm**					BLUE

STANDARD SWIVEL ARMS

Round Tooling | Dimensions | Technical Specifications



Features:

- Mounts apple core accessories to Ø25mm/1.00" round tube
- Provides 360° of rotational adjustments along (3) axes
- Used to mount venturi, bumpers, round locators, and proximity switches

Specifications:
Maximum Clamp Load:
200 ft-lb [271 Nm]
Material:
Body:
Cast Aluminum
Spacer:
Machined Aluminum

SAxx Single-Bolt Ø25mm/1.00" for Ø19.1mm [.75"] Apple Core

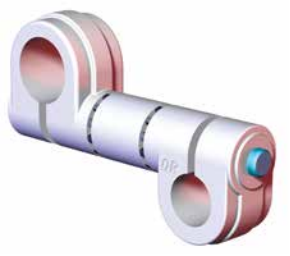

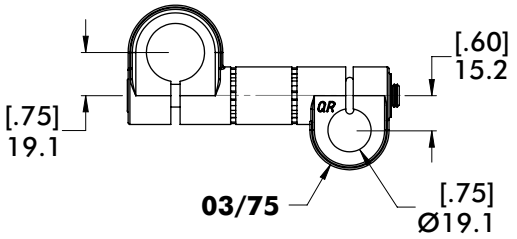

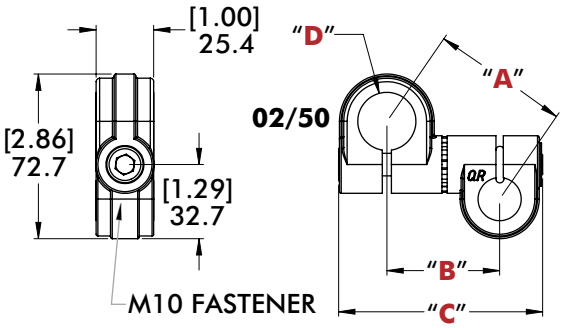



Model Number	(Ø)"D"	"A"	"B"	"C"	Weight	FINISH
CPI-SA**10-100-075-02**	**1.00"**(in)	[2.38] 60.4	[1.96] 49.8	[3.54] 90.0	[0.46 lb] 0.21 kg	SILVER
CPI-SA**25-25-19-50**	**25mm**					BLUE
CPI-SA**10-100-075-03**	**1.00"**(in)	[3.31] 84.1	[3.02] 76.8	[4.72] 120.0	[0.57 lb] 0.26 kg	SILVER
CPI-SA**25-25-19-75**	**25mm**					BLUE

STANDARD SWIVEL ARMS

Round Tooling | Dimensions | Technical Specifications

EDxx Double-Bolt Ø25mm/1.00" for Ø19.1mm [.75"] Apple Core

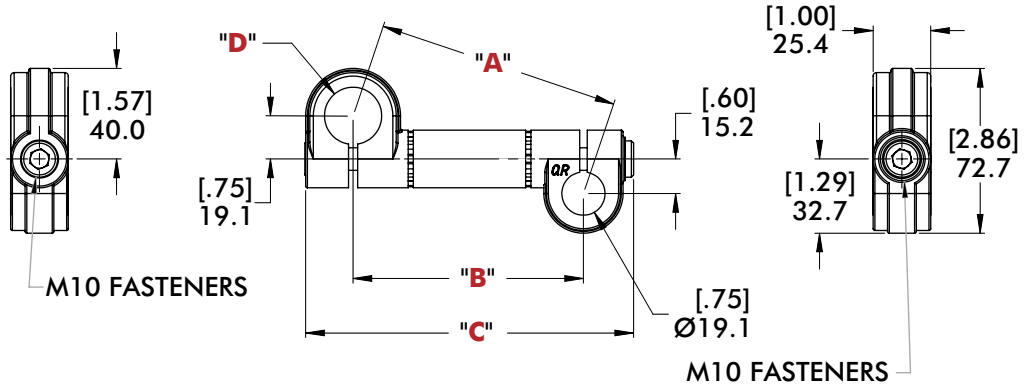

Model Number	(Ø)"D"	"A"	"B"	"C"	Weight	FINISH
CPI-ED**10-100-075-04**	**1.00"**(in)	[4.27] 108.4	[4.05] 102.9	[5.74] 145.9	[0.65 lb] 0.29 kg	SILVER
CPI-ED**25-25-19-100**	**25mm**	[4.22] 107.2	[4.00] 101.6	[5.69] 144.6		BLUE
CPI-ED**10-100-075-05**	**1.00"**(in)	[5.23] 132.8	[5.05] 128.3	[6.74] 171.3	[0.71 lb] 0.32 kg	SILVER
CPI-ED**10-100-075-06**	**1.00"**(in)	[6.20] 157.4	[6.05] 153.7	[7.74] 196.7	[0.78 lb] 0.36 kg	SILVER
CPI-ED**25-25-19-150**	**25mm**	[6.13] 155.7	[5.98] 151.9	[7.67] 194.2		BLUE
CPI-ED**10-100-075-07**	**1.00"**(in)	[7.18] 182.3	[7.05] 179.1	[8.74] 222.1	[0.85 lb] 0.39 kg	SILVER
CPI-ED**10-100-075-08**	**1.00"**(in)	[8.16] 207.3	[8.05] 204.5	[9.74] 247.5	[0.92 lb] 0.42 kg	SILVER
CPI-ED**25-25-19-200**	**25mm**	[8.06] 204.8	[7.95] 201.9	[9.64] 244.9		BLUE
CPI-ED**10-100-075-09**	**1.00"**(in)	[9.15] 232.4	[9.05] 229.9	[10.74] 272.9	[0.99 lb] 0.45 kg	SILVER
CPI-ED**10-100-075-10**	**1.00"**(in)	[10.14] 257.6	[10.05] 255.3	[11.74] 298.3	[1.06 lb] 0.48 kg	SILVER
CPI-ED**25-25-19-250**	**25mm**	[10.01] 254.3	[9.92] 252.0	[11.61] 295.0		BLUE
CPI-ED**10-100-075-11**	**1.00"**(in)	[11.13] 282.7	[11.05] 280.7	[12.74] 323.7	[1.13 lb] 0.51 kg	SILVER
CPI-ED**10-100-075-12**	**1.00"**(in)	[12.13] 308.0	[12.05] 306.1	[13.74] 349.0	[1.20 lb] 0.54 kg	SILVER
CPI-ED**25-25-19-300**	**25mm**	[11.97] 303.9	[11.89] 302.0	[13.58] 345.0		BLUE
CPI-ED**10-100-075-13**	**1.00"**(in)	[13.12] 338.2	[13.05] 331.5	[14.74] 374.5	[1.27 lb] 0.58 kg	SILVER
CPI-ED**10-100-075-14**	**1.00"**(in)	[14.11] 358.5	[14.05] 356.9	[15.74] 399.9	[1.34 lb] 0.61 kg	SILVER
CPI-ED**25-25-19-350**	**25mm**	[13.92] 353.4	[13.85] 351.8	[15.54] 394.8		BLUE
CPI-ED**10-100-075-15**	**1.00"**(in)	[15.11] 383.8	[15.05] 382.3	[16.74] 425.3	[1.41 lb] 0.64 kg	SILVER
CPI-ED**10-100-075-16**	**1.00"**(in)	[16.11] 409.1	[16.05] 407.7	[17.74] 450.7	[1.48 lb] 0.67 kg	SILVER
CPI-ED**25-25-19-400**	**25mm**	[15.88] 403.3	[15.82] 401.8	[17.51] 444.9		BLUE

STANDARD SWIVEL ARMS

Round Tooling | Dimensions | Technical Specifications



Features:

- Mounts apple core accessories to Ø40mm/1.50" round tube
- Provides 360° of rotational adjustments along (3) axes
- Used to mount venturi, bumpers, round locators, and proximity switches

Specifications:
Maximum Clamp Load:
200 ft-lb [271 Nm]
Material:
Body:
Cast Aluminum
Spacer:
Machined Aluminum

SAxx Single-Bolt Ø40mm/1.50" for Ø19.1mm [.75"] Apple Core



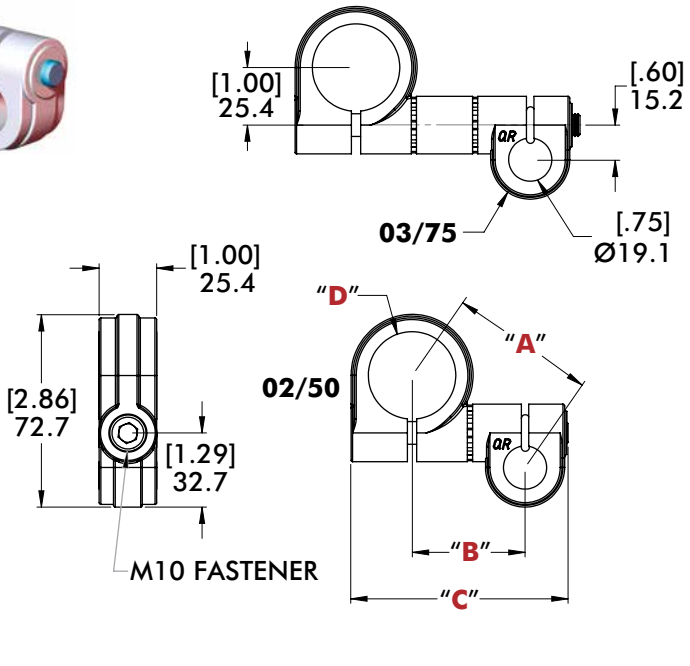



Model Number	(Ø)"D"	"A"	"B"	"C"	Weight	FINISH
CPI-SA**10-150-075-02**	**1.50"**(in)	[2.53] 64.3	[1.96] 49.8	[3.77] 95.9	[0.50 lb] 0.23 kg	SILVER
CPI-SA**25-40-19-50**	**40mm**					BLUE
CPI-SA**10-150-075-03**	**1.50"**(in)	[3.42] 87.0	[3.03] 76.9	[4.95] 125.9	[0.62 lb] 0.28 kg	SILVER
CPI-SA**25-40-19-75**	**40mm**					BLUE

STANDARD SWIVEL ARMS

Round Tooling | Dimensions | Technical Specifications

EDxx Double-Bolt Ø40mm/1.50" for Ø19.1mm [.75"] Apple Core

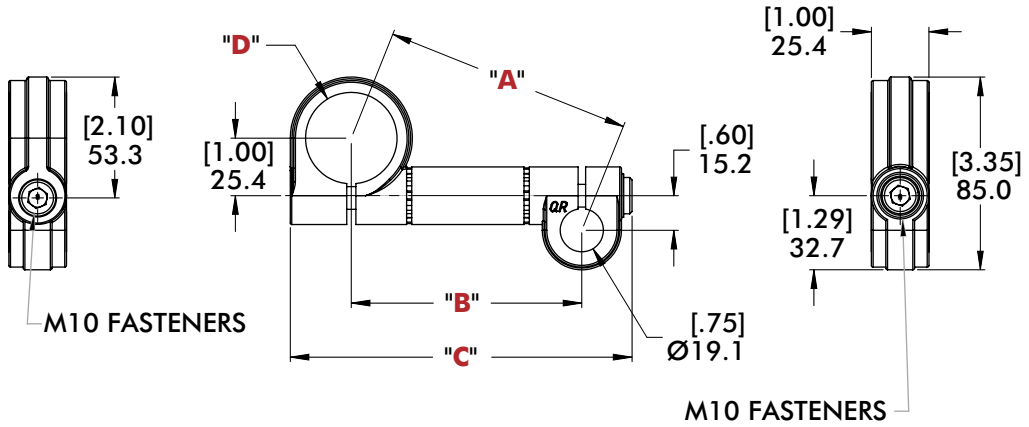

Model Number	(Ø)"D"	"A"	"B"	"C"	Weight	FINISH
CPI-ED**10-150-075-04**	**1.50"**(in)	[4.36] 110.7	[4.05] 102.9	[5.98] 152.0	[0.69 lb] 0.31 kg	SILVER
CPI-ED**25-40-19-100**	**40mm**	[4.31] 109.5	[4.00] 101.7	[5.93] 150.7		BLUE
CPI-ED**10-150-075-05**	**1.50"**(in)	[5.30] 134.6	[5.05] 128.3	[6.98] 177.4	[0.76 lb] 0.34 kg	SILVER
CPI-ED**10-150-075-06**	**1.50"**(in)	[6.26] 159.0	[6.05] 153.7	[7.98] 202.8	[0.83 lb] 0.38 kg	SILVER
CPI-ED**25-40-19-150**	**40mm**	[6.19] 157.3	[5.98] 152.0	[7.91] 201.0		BLUE
CPI-ED**10-150-075-07**	**1.50"**(in)	[7.23] 183.7	[7.05] 179.1	[8.98] 228.2	[0.90 lb] 0.41 kg	SILVER
CPI-ED**10-150-075-08**	**1.50"**(in)	[8.21] 208.5	[8.05] 204.5	[9.98] 253.6	[0.97 lb] 0.44 kg	SILVER
CPI-ED**25-40-19-200**	**40mm**	[8.11] 206.0	[7.95] 202.0	[9.88] 251.0		BLUE
CPI-ED**10-150-075-09**	**1.50"**(in)	[9.19] 233.5	[9.05] 229.9	[10.98] 279.0	[1.03 lb] 0.47 kg	SILVER
CPI-ED**10-150-075-10**	**1.50"**(in)	[10.18] 258.5	[10.05] 255.3	[11.98] 304.4	[1.10 lb] 0.50 kg	SILVER
CPI-ED**25-40-19-250**	**40mm**	[10.05] 255.3	[9.92] 252.0	[11.85] 308.1		BLUE
CPI-ED**10-150-075-11**	**1.50"**(in)	[11.17] 283.7	[11.05] 280.7	[12.98] 329.8	[1.17 lb] 0.53 kg	SILVER
CPI-ED**10-150-075-12**	**1.50"**(in)	[12.16] 308.8	[12.05] 306.1	[13.98] 355.2	[1.24 lb] 0.56 kg	SILVER
CPI-ED**25-40-19-300**	**40mm**	[12.00] 304.8	[11.89] 302.1	[13.82] 351.1		BLUE
CPI-ED**10-150-075-13**	**1.50"**(in)	[13.15] 334.0	[13.05] 331.5	[14.98] 380.6	[1.31 lb] 0.59 kg	SILVER
CPI-ED**10-150-075-14**	**1.50"**(in)	[14.14] 359.2	[14.05] 356.9	[15.98] 406.0	[1.38 lb] 0.63 kg	SILVER
CPI-ED**25-40-19-350**	**40mm**	[13.94] 354.2	[13.85] 351.9	[15.78] 400.9		BLUE
CPI-ED**10-150-075-15**	**1.50"**(in)	[15.14] 384.5	[15.05] 382.3	[16.98] 431.4	[1.45 lb] 0.66 kg	SILVER
CPI-ED**10-150-075-16**	**1.50"**(in)	[16.13] 409.8	[16.05] 407.7	[17.98] 456.8	[1.52 lb] 0.69 kg	SILVER
CPI-ED**25-40-19-400**	**40mm**	[15.90] 403.9	[15.82] 401.9	[18.00] 450.9		BLUE

TRANSITION SWIVEL ARMS

Round Tooling | Dimensions | Technical Specifications

SAxx Single-Bolt Ø25mm/1.00" to 25mm/Ø1.00"

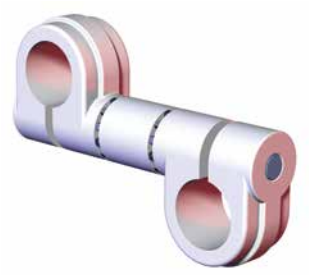

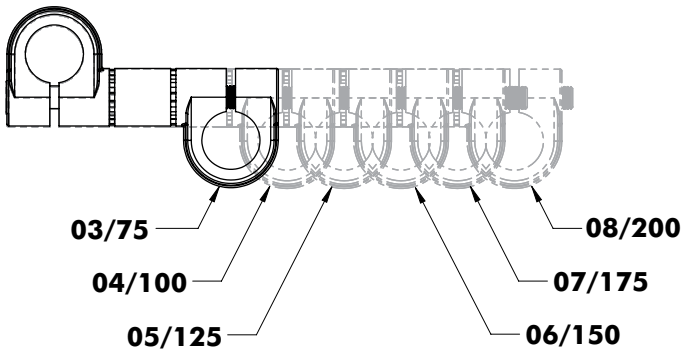

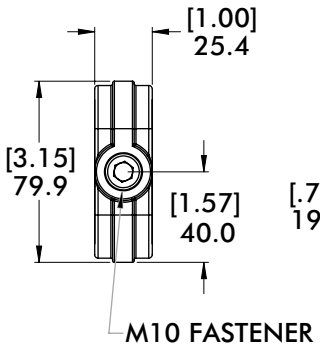

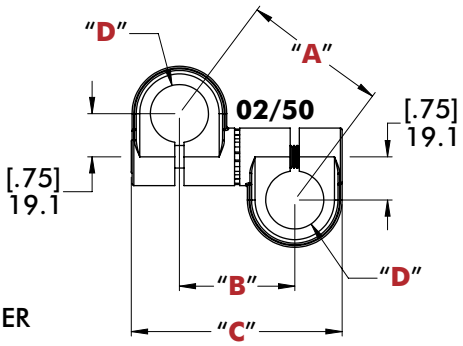



Model Number	(Ø)"D"	"A"	"B"	"C"	Weight	FINISH
CPI-SA**10-100-100-02**	**1.00"**(in)	[2.50] 63.6	[2.00] 50.9	[3.66] 93.1	[0.49 lb] 0.22 kg	SILVER
CPI-SA**25-25-25-50**	**25mm**					BLUE
CPI-SA**10-100-100-03**	**1.00"**(in)	[3.42] 86.7	[3.07] 77.9	[4.73] 120.1	[0.60 lb] 0.27 kg	SILVER
CPI-SA**25-25-25-75**	**25mm**					BLUE
CPI-SA**10-100-100-04**	**1.00"**(in)	[4.31] 109.6	[4.04] 102.7	[5.70] 144.9	[0.69 lb] 0.31 kg	SILVER
CPI-SA**25-25-25-100**	**25mm**					BLUE
CPI-SA**10-100-100-05**	**1.00"**(in)	[5.25] 133.4	[5.03] 127.9	[6.69] 170.0	[0.79 lb] 0.36 kg	SILVER
CPI-SA**25-25-25-125**	**25mm**					BLUE
CPI-SA**10-100-100-06**	**1.00"**(in)	[6.21] 157.7	[6.02] 153.0	[7.68] 195.2	[0.88 lb] 0.40 kg	SILVER
CPI-SA**25-25-25-150**	**25mm**					BLUE
CPI-SA**10-100-100-07**	**1.00"**(in)	[7.16] 181.9	[7.00] 177.9	[9.06] 230.0	[1.00 lb] 0.45 kg	SILVER
CPI-SA**25-25-25-175**	**25mm**					BLUE
CPI-SA**10-100-100-08**	**1.00"**(in)	[8.13] 206.6	[7.99] 203.0	[9.84] 250.0	[1.09 lb] 0.50 kg	SILVER
CPI-SA**25-25-25-200**	**25mm**					BLUE

TRANSITION SWIVEL ARMS

Round Tooling | Dimensions | Technical Specifications

EDxx Double-Bolt Ø25mm/1.00" to Ø25mm/1.00"

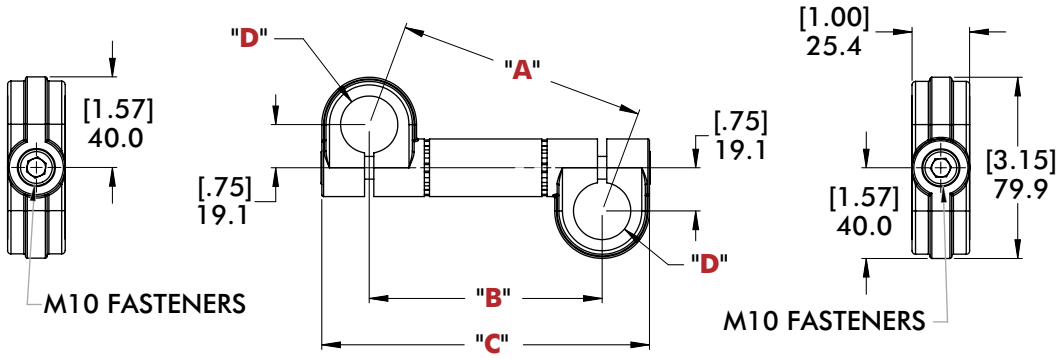

Model Number	(Ø)"D"	"A"	"B"	"C"	Weight	FINISH
CPI-ED**10-100-100-04**	**1.00"**(in)	[4.36] 110.7	[4.09] 104.0	[5.74] 145.8	[0.67 lb] 0.30 kg	SILVER
CPI-ED**25-25-25-100**	**25mm**	[4.31] 109.6	[4.04] 102.7	[5.69] 144.5		BLUE
CPI-ED**10-100-100-05**	**1.00"**(in)	[5.31] 134.9	[5.09] 129.4	[6.74] 171.2	[0.74 lb] 0.34 kg	SILVER
CPI-ED**10-100-100-06**	**1.00"**(in)	[6.28] 159.4	[6.09] 154.8	[7.74] 196.6	[0.81 lb] 0.37 kg	SILVER
CPI-ED**25-25-25-150**	**25mm**	[6.21] 157.7	[6.02] 153.0	[7.67] 194.8		BLUE
CPI-ED**10-100-100-07**	**1.00"**(in)	[7.25] 184.2	[7.09] 180.2	[8.74] 222.0	[0.88 lb] 0.40 kg	SILVER
CPI-ED**10-100-100-08**	**1.00"**(in)	[8.23] 209.1	[8.09] 205.6	[9.74] 247.4	[0.95 lb] 0.43 kg	SILVER
CPI-ED**25-25-25-200**	**25mm**	[8.13] 206.6	[7.99] 203.0	[9.64] 244.9		BLUE
CPI-ED**10-100-100-09**	**1.00"**(in)	[9.22] 234.1	[9.09] 231.0	[10.74] 272.8	[1.02 lb] 0.46 kg	SILVER
CPI-ED**10-100-100-10**	**1.00"**(in)	[10.20] 259.2	[10.09] 256.4	[11.74] 298.2	[1.09 lb] 0.49 kg	SILVER
CPI-ED**25-25-25-250**	**25mm**	[10.08] 255.9	[9.96] 253.1	[11.61] 294.9		BLUE
CPI-ED**10-100-100-11**	**1.00"**(in)	[11.19] 284.4	[11.09] 281.8	[12.74] 323.6	[1.15 lb] 0.52 kg	SILVER
CPI-ED**10-100-100-12**	**1.00"**(in)	[12.19] 309.5	[12.09] 307.2	[13.74] 349.0	[1.22 lb] 0.56 kg	SILVER
CPI-ED**25-25-25-300**	**25mm**	[12.03] 305.5	[11.93] 303.1	[13.58] 344.9		BLUE
CPI-ED**10-100-100-13**	**1.00"**(in)	[13.18] 334.8	[13.09] 332.6	[14.74] 374.4	[1.29 lb] 0.59 kg	SILVER
CPI-ED**10-100-100-14**	**1.00"**(in)	[14.17] 360.0	[14.09] 358.0	[15.74] 399.8	[1.36 lb] 0.62 kg	SILVER
CPI-ED**25-25-25-350**	**25mm**	[13.97] 355.0	[13.89] 352.9	[15.54] 394.7		BLUE
CPI-ED**10-100-100-15**	**1.00"**(in)	[15.17] 385.3	[15.09] 383.4	[16.74] 425.2	[1.43 lb] 0.65 kg	SILVER
CPI-ED**10-100-100-16**	**1.00"**(in)	[16.16] 410.6	[16.09] 408.8	[17.74] 450.6	[1.50 lb] 0.68 kg	SILVER
CPI-ED**25-25-25-400**	**25mm**	[15.93] 404.7	[15.86] 402.9	[17.51] 444.8		BLUE

TRANSITION SWIVEL ARMS

Round Tooling | Dimensions | Technical Specifications

SAxx Single-Bolt Ø40mm/1.50" to Ø25mm/1.00"

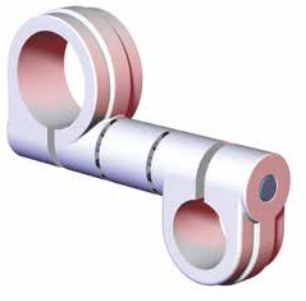

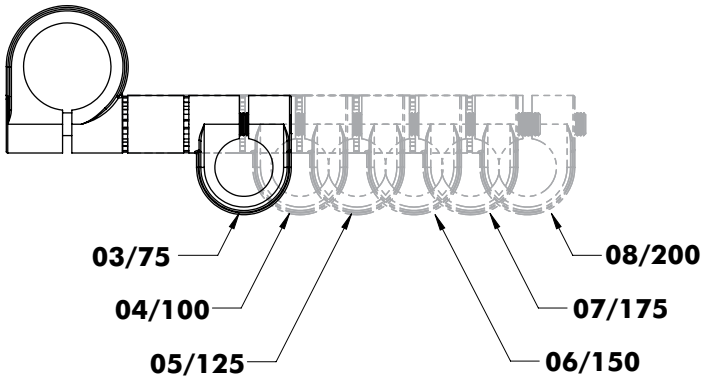

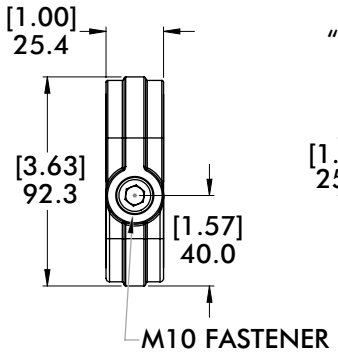

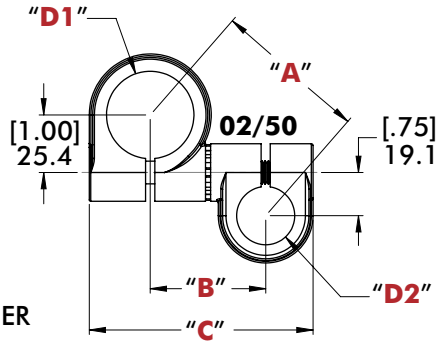



Model Number	(Ø)"D1"	(Ø)"D2"	"A"	"B"	"C"	Weight	FINISH
CPI-SA**10-150-100-02**	**1.50"**(in)	**1.00"**(in)	[2.66] 67.6	[2.01] 51.0	[3.89] 98.8	[0.53 lb] 0.24 kg	SILVER
CPI-SA**25-40-25-50**	**40mm**	**25mm**					BLUE
CPI-SA**10-150-100-03**	**1.50"**(in)	**1.00"**(in)	[3.53] 89.8	[3.07] 78.0	[4.95] 125.7	[0.64 lb] 0.29 kg	SILVER
CPI-SA**25-40-25-75**	**40mm**	**25mm**					BLUE
CPI-SA**10-150-100-04**	**1.50"**(in)	**1.00"**(in)	[4.41] 112.0	[4.05] 102.8	[5.93] 150.6	[0.73 lb] 0.33 kg	SILVER
CPI-SA**25-40-25-100**	**40mm**	**25mm**					BLUE
CPI-SA**10-150-100-05**	**1.50"**(in)	**1.00"**(in)	[5.33] 135.4	[5.04] 127.9	[6.92] 175.8	[0.83 lb] 0.38 kg	SILVER
CPI-SA**25-40-25-125**	**40mm**	**25mm**					BLUE
CPI-SA**10-150-100-06**	**1.50"**(in)	**1.00"**(in)	[6.28] 159.4	[6.03] 153.1	[7.91] 200.9	[0.93 lb] 0.42 kg	SILVER
CPI-SA**25-40-25-150**	**40mm**	**25mm**					BLUE
CPI-SA**10-150-100-07**	**1.50"**(in)	**1.00"**(in)	[7.22] 183.4	[7.01] 178.0	[8.89] 225.8	[1.04 lb] 0.47 kg	SILVER
CPI-SA**25-40-25-175**	**40mm**	**25mm**					BLUE
CPI-SA**10-150-100-08**	**1.50"**(in)	**1.00"**(in)	[8.19] 207.9	[8.00] 203.1	[9.88] 251.0	[1.13 lb] 0.51 kg	SILVER
CPI-SA**25-40-25-200**	**40mm**	**25mm**					BLUE

Dimensions and technical information are subject to change without notice

TRANSITION SWIVEL ARMS

Round Tooling | Dimensions | Technical Specifications

EDxx Double-Bolt Ø40mm/1.50" to Ø25mm/1.00"

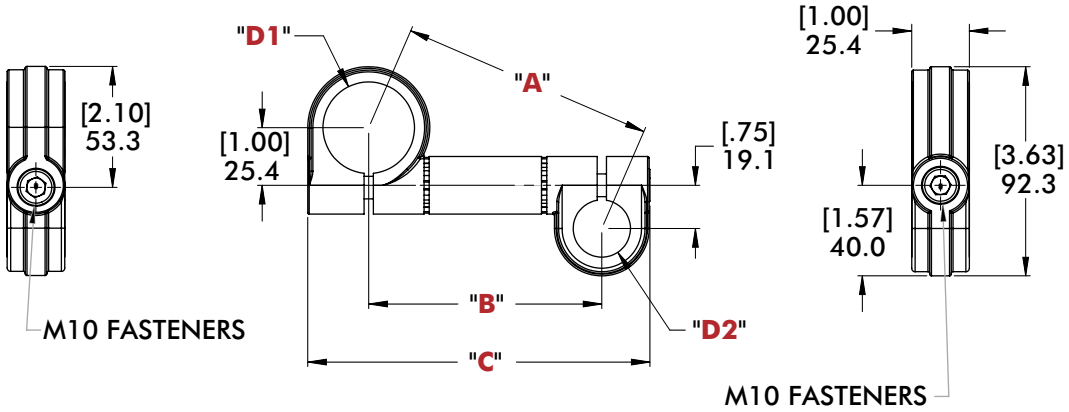

Model Number	(Ø)"D1"	(Ø)"D2"	"A"	"B"	"C"	Weight	FINISH
CPI-ED**10-150-100-04**	**1.50"**(in)	**1.00"**(in)	[4.46] 113.2	[4.10] 104.1	[5.98] 151.9	[0.71 lb] 0.32 kg	SILVER
CPI-ED**25-40-25-100**	**40mm**	**25mm**	[4.41] 112.8	[4.05] 102.8	[5.93] 150.6		BLUE
CPI-ED**10-150-100-05**	**1.50"**(in)	**1.00"**(in)	[5.39] 136.9	[5.10] 129.5	[6.98] 177.3	[0.78 lb] 0.36 kg	SILVER
CPI-ED**10-150-100-06**	**1.50"**(in)	**1.00"**(in)	[6.34] 161.1	[6.10] 154.9	[7.98] 202.7	[0.85 lb] 0.39 kg	SILVER
CPI-ED**25-40-25-150**	**40mm**	**25mm**	[6.28] 159.4	[6.03] 153.1	[7.91] 200.9		BLUE
CPI-ED**10-150-100-07**	**1.50"**(in)	**1.00"**(in)	[7.31] 185.7	[7.10] 180.3	[8.98] 228.1	[0.92 lb] 0.42 kg	SILVER
CPI-ED**10-150-100-08**	**1.50"**(in)	**1.00"**(in)	[8.28] 210.4	[8.10] 205.7	[9.98] 253.5	[0.99 lb] 0.45 kg	SILVER
CPI-ED**25-40-25-200**	**40mm**	**25mm**	[8.19] 207.9	[8.00] 203.1	[9.88] 251.0		BLUE
CPI-ED**10-150-100-09**	**1.50"**(in)	**1.00"**(in)	[9.26] 235.3	[9.10] 231.1	[10.98] 278.9	[1.06 lb] 0.48 kg	SILVER
CPI-ED**10-150-100-10**	**1.50"**(in)	**1.00"**(in)	[10.25] 260.3	[10.10] 256.5	[11.98] 304.3	[1.13 lb] 0.51 kg	SILVER
CPI-ED**25-40-25-250**	**40mm**	**25mm**	[10.12] 257.03	[9.97] 253.2	[11.85] 301.0		BLUE
CPI-ED**10-150-100-11**	**1.50"**(in)	**1.00"**(in)	[11.23] 285.3	[11.10] 281.9	[12.98] 329.7	[1.20 lb] 0.54 kg	SILVER
CPI-ED**10-150-100-12**	**1.50"**(in)	**1.00"**(in)	[12.22] 310.5	[12.10] 307.3	[13.98] 355.1	[1.27 lb] 0.57 kg	SILVER
CPI-ED**25-40-25-300**	**40mm**	**25mm**	[12.06] 306.4	[11.94] 303.2	[13.82] 351.03		BLUE
CPI-ED**10-150-100-13**	**1.50"**(in)	**1.00"**(in)	[13.21] 335.6	[13.10] 332.7	[14.98] 380.5	[1.34 lb] 0.61 kg	SILVER
CPI-ED**10-150-100-14**	**1.50"**(in)	**1.00"**(in)	[14.21] 360.8	[14.10] 358.1	[15.98] 405.9	[1.41 lb] 0.64 kg	SILVER
CPI-ED**25-40-25-350**	**40mm**	**25mm**	[14.00] 355.8	[13.90] 353.0	[15.78] 400.8		BLUE
CPI-ED**10-150-100-15**	**1.50"**(in)	**1.00"**(in)	[15.20] 386.0	[15.10] 383.5	[16.98] 431.3	[1.47 lb] 0.67 kg	SILVER
CPI-ED**10-150-100-16**	**1.50"**(in)	**1.00"**(in)	[16.19] 411.3	[16.10] 408.9	[17.98] 456.7	[1.54 lb] 0.70 kg	SILVER
CPI-ED**25-40-25-400**	**40mm**	**25mm**	[15.96] 405.5	[15.87] 403.0	[17.75] 450.9		BLUE

TRANSITION SWIVEL ARMS

Round Tooling | Dimensions | Technical Specifications

SAxx Single-Bolt Ø40mm/1.50" to Ø40mm/1.50"

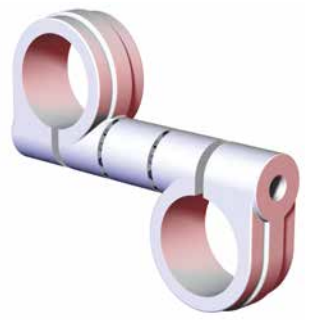

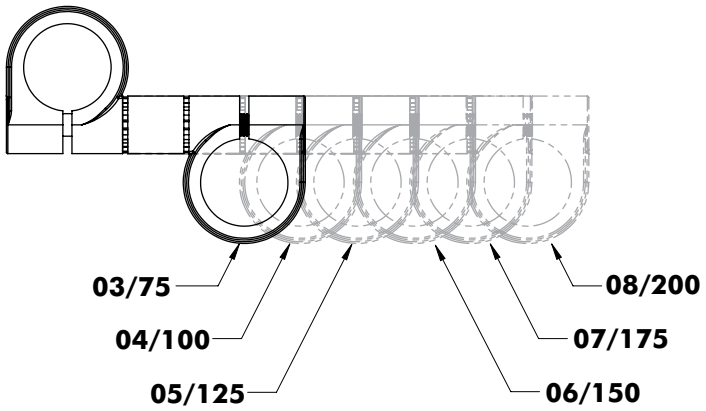

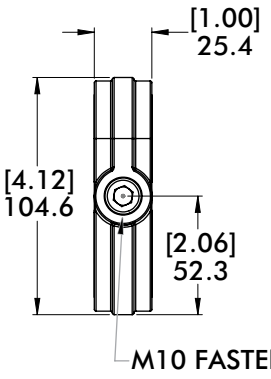

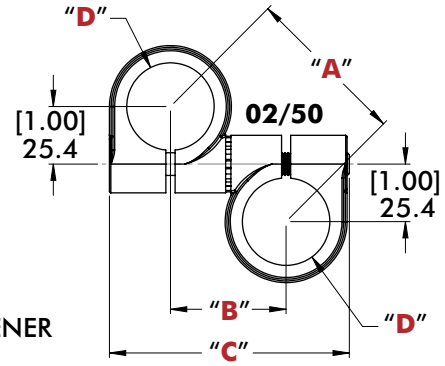

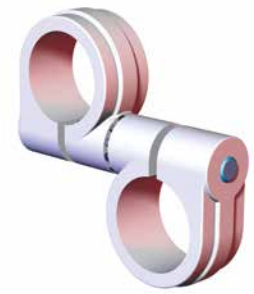

Model Number	(Ø)"D"	"A"	"B"	"C"	Weight	FINISH
CPI-SA**10-150-150-02**	**1.50"**(in)	[2.84] 72.0	[2.01] 51.1	[4.17] 105.9	[0.59 lb] 0.27 kg	SILVER
CPI-SA**25-40-40-50**	**40mm**					BLUE
CPI-SA**10-150-150-03**	**1.50"**(in)	[3.67] 93.2	[3.07] 78.1	[5.19] 131.9	[0.69 lb] 0.31 kg	SILVER
CPI-SA**25-40-40-75**	**40mm**					BLUE
CPI-SA**10-150-150-04**	**1.50"**(in)	[4.52] 114.7	[4.05] 102.9	[6.17] 156.7	[0.79 lb] 0.36 kg	SILVER
CPI-SA**25-40-40-100**	**40mm**					BLUE
CPI-SA**10-150-150-05**	**1.50"**(in)	[5.42] 137.7	[5.04] 128.0	[7.16] 181.9	[0.88 lb] 0.40 kg	SILVER
CPI-SA**25-40-40-125**	**40mm**					BLUE
CPI-SA**10-150-150-06**	**1.50"**(in)	[6.35] 161.4	[6.03] 153.2	[8.15] 207.0	[0.97 lb] 0.44 kg	SILVER
CPI-SA**25-40-40-150**	**40mm**					BLUE
CPI-SA**10-150-150-07**	**1.50"**(in)	[7.29] 185.2	[7.01] 178.1	[9.13] 231.9	[1.09 lb] 0.49 kg	SILVER
CPI-SA**25-40-40-175**	**40mm**					BLUE
CPI-SA**10-150-150-08**	**1.50"**(in)	[8.25] 209.5	[8.00] 203.2	[10.12] 257.0	[0.54 lb] 1.18 kg	SILVER
CPI-SA**25-40-40-200**	**40mm**					BLUE

TRANSITION SWIVEL ARMS

Round Tooling | Dimensions | Technical Specifications

EDxx Double-Bolt Ø40mm/1.50" to Ø40mm/1.50"

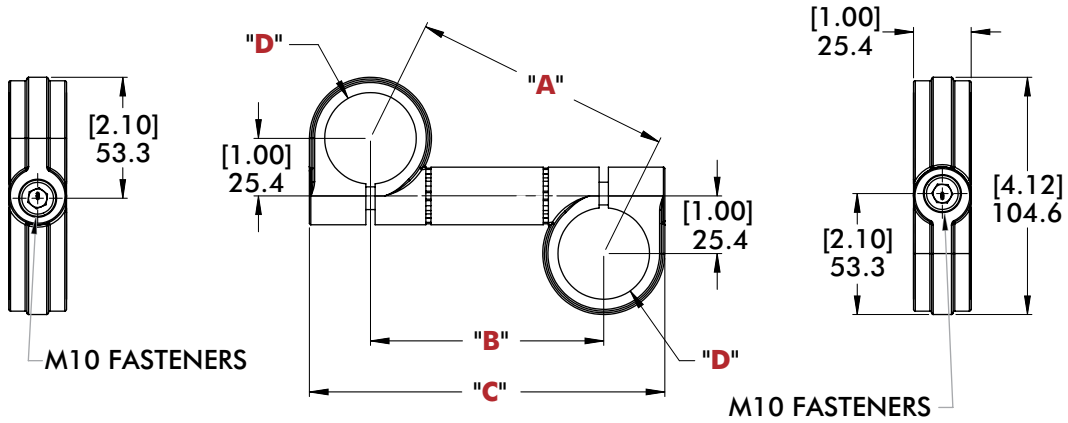

Model Number	(Ø)"D"	"A"	"B"	"C"	Weight	FINISH
CPI-ED**10-150-150-04**	**1.50"**(in)	[4.56] 115.9	[4.10] 104.1	[6.22] 158.0	[0.76 lb] 0.34 kg	SILVER
CPI-ED**25-40-40-100**	**40mm**	[4.52] 114.7	[4.05] 102.9	[6.17] 156.7		BLUE
CPI-ED**10-150-150-06**	**1.50"**(in)	[6.42] 163.1	[6.10] 154.9	[8.22] 208.8	[0.90 lb] 0.41 kg	SILVER
CPI-ED**25-40-40-150**	**40mm**	[6.35] 161.4	[6.03] 153.2	[8.15] 207.0		BLUE
CPI-ED**10-150-150-08**	**1.50"**(in)	[8.34] 211.9	[8.10] 205.7	[10.22] 259.6	[1.03 lb] 0.47 kg	SILVER
CPI-ED**25-40-40-200**	**40mm**	[8.25] 209.5	[8.00] 203.2	[10.12] 257.0		BLUE
CPI-ED**10-150-150-10**	**1.50"**(in)	[10.30] 261.5	[10.10] 256.4	[12.22] 310.4	[1.17 lb] 0.53 kg	SILVER
CPI-ED**25-40-40-250**	**40mm**	[10.17] 258.3	[9.97] 253.2	[12.09] 307.1		BLUE
CPI-ED**10-150-150-12**	**1.50"**(in)	[12.27] 311.5	[12.10] 307.3	[14.22] 361.2	[1.31 lb] 0.59 kg	SILVER
CPI-ED**25-40-40-300**	**40mm**	[12.11] 307.5	[11.94] 303.3	[14.06] 357.1		BLUE
CPI-ED**10-150-150-14**	**1.50"**(in)	[14.24] 361.7	[14.10] 358.1	[16.22] 411.98	[1.45 lb] 0.66 kg	SILVER
CPI-ED**25-40-40-350**	**40mm**	[14.03] 356.7	[13.90] 353.1	[16.02] 406.9		BLUE
CPI-ED**10-150-150-16**	**1.50"**(in)	[16.22] 412.1	[16.10] 408.9	[18.22] 462.7	[1.59 lb] 0.72 kg	SILVER
CPI-ED**25-40-40-400**	**40mm**	[16.00] 406.3	[15.87] 403.1	[18.00] 457.0		BLUE

SINGLE END EXTENSIONS

Round Tooling | Dimensions | Technical Specifications

ES Rod End and Mounting Extensions

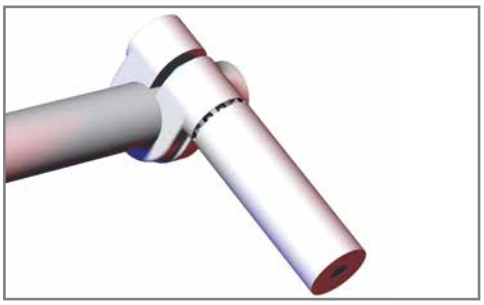

Features:
- Mounts to round tube for extended mounting options
- Provides 360° of rotational adjustments along a single axis

Specifications:
Maximum Clamp Load:
200 ft-lb [271 Nm]
Material:
Body:
Cast Aluminum
Extension:
Machined Aluminum

ES Ø25mm/1.00" Rod End Extensions

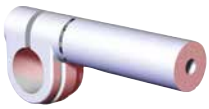

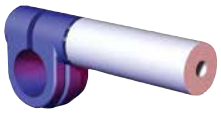

"L" = Specify Length from Below

English Lengths:
From 03(3.00") to 28(28.00")
in 1.00" Increments
Order Example
CPI-ES10-100-06 (6.00" Length)

Metric Lengths:
From 50(50mm) to 400(400mm)
in 50mm Increments
Order Example
CPI-ES25-25-250 (250mm Length)

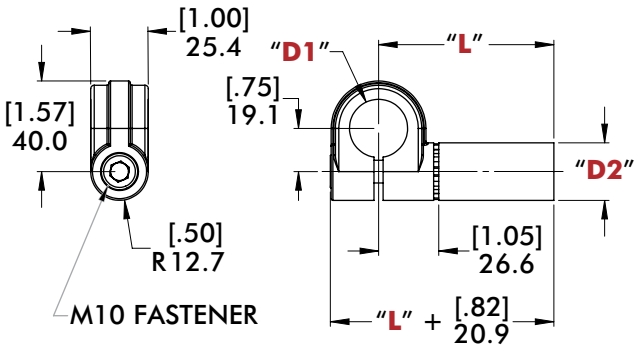

Model Number	(Ø)"D1"	(Ø)"D2"	Weight (Base + Additional Increments)	FINISH
CPI-ES**10-100**-"L"	**1.00"**(in)	**1.00"**(in)	Base Length "L" 03 = 0.19 kg [0.42 lb] Add .031 kg [.068 lb] per additional increment	SILVER
CPI-ES**25-25**-"L"	**25mm**	**25mm**	Base Length "L" 100 = 0.22 kg [0.49 lb] Add .061 kg [.134 lb] per additional increment	BLUE

ES Ø40mm/1.50" Rod End Extensions

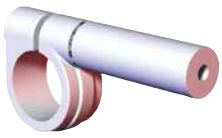



"L" = Specify Length from Below

English Lengths:
From 03(3.00") to 28(28.00")
in 1.00" Increments
Order Example
CPI-ES10-150-06 (6.00" Length)

Metric Lengths:
From 50(50mm) to 400(400mm)
in 50mm Increments
Order Example
CPI-ES25-40-250 (250mm Length)

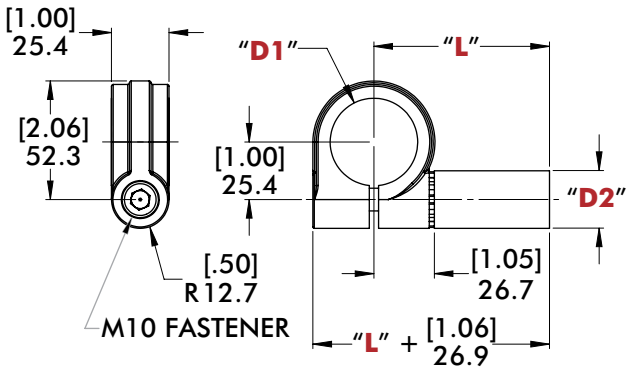

Model Number	(Ø)"D1"	(Ø)"D2"	Weight (Base + Additional Increments)	FINISH
CPI-ES**10-150**-"L"	**1.50"**(in)	**1.00"**(in)	Base Length "L" 03 = 0.21 kg [0.46 lb] Add .031 kg [.068 lb] per additional increment	SILVER
CPI-ES**25-40**-"L"	**40mm**	**25mm**	Base Length "L" 100 = 0.23 kg [0.51 lb] Add .061 kg [.134 lb] per additional increment	BLUE

Dimensions and technical information are subject to change without notice

SINGLE END EXTENSIONS

Nominal (Ø) given
See chart on Page 72 for actual (Ø) size



Mounting End Extensions
CPI-ES10-075-06
(Shown Above)

MSE Ø12.7mm [.50"] Extension (Micro)

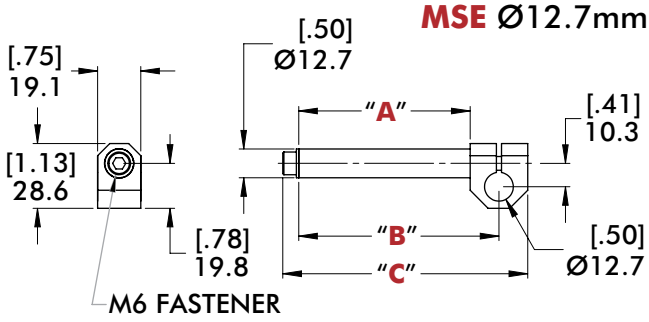



Model Number	"A"	"B"	"C"	Weight
CPI-MSE-50-50-**03**	[2.98] 75.6	[3.48] 88.3	[4.25] 108.1	[0.14 lb] 0.06 kg
CPI-MSE-50-50-**06**	[5.73] 145.5	[6.23] 158.2	[7.00] 177.9	[0.20 lb] 0.09 kg

ES Ø25mm/1.00" Extension for Ø19.1mm [.75"] Apple Core

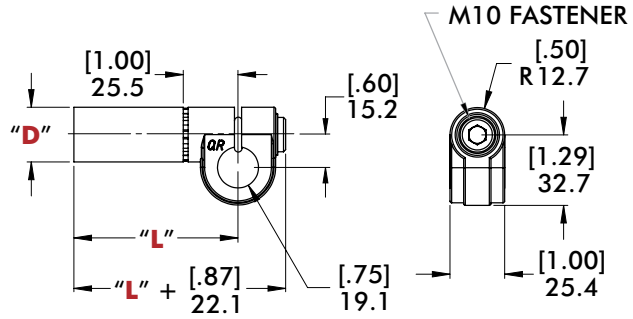

"L" = Specify Length from Below

English Lengths:
From 03(3.00") to 28(28.00")
in 1.00" Increments
Order Example
CPI-ES10-075-06 (6.00" Length)

Metric Lengths:
From 50(50mm) to 400(400mm)
in 50mm Increments
Order Example
CPI-ES25-19-250 (250mm Length)

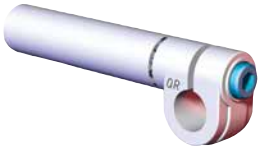

Model Number	(Ø)"D"	Weight *(Base + Additional Increments)*	FINISH
CPI-ES**10-075**-"L"	**1.00"**(in)	Base Length "L" 03 = 0.17 kg [0.38 lb] *Add .031 kg [.068 lb] per additional increment*	SILVER
CPI-ES**25-19**-"L"	**25mm**	Base Length "L" 100 = 0.22 kg [0.49 lb] *Add .031 kg [.068 lb] per additional increment*	BLUE

ESxx Ø25mm/1.00" Extension for Ø28.6mm [1.125"] Spherical Swivel Ball

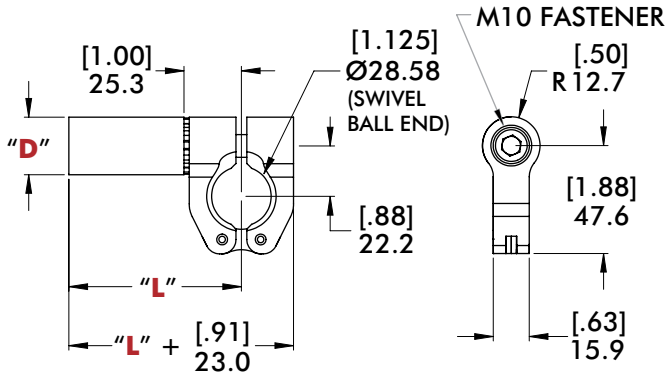

"L" = Specify Length from Below

English Lengths:
From 03(3.00") to 18(18.00")
in 1.00" Increments
Order Example
CPI-ES10-B112-06 (6.00" Length)

Metric Lengths
From 50 (50mm) to 400(400mm)
in 25mm Increments
Order Example
CPI-ES25-B112-75 (75mm Length)



Model Number	(Ø)"D"	Weight *(Base + Additional Increments)*	FINISH
CPI-ES**10**-B112-"L"	**1.00"**(in)	Base Length "L" 03 = 0.23 kg [0.51 lb] Add .031 kg [.068 lb] per additional increment	SILVER
CPI-ES**25**-B112-"L"	**25mm**	Base Length "L" 100 = 0.23 kg [0.51 lb] Add .029 kg [.064 lb] per additional increment	BLUE

NEST PAD BRACKETS

Round Tooling | Dimensions | Technical Specifications

EST

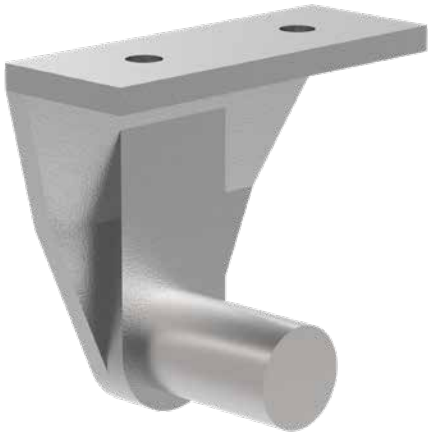

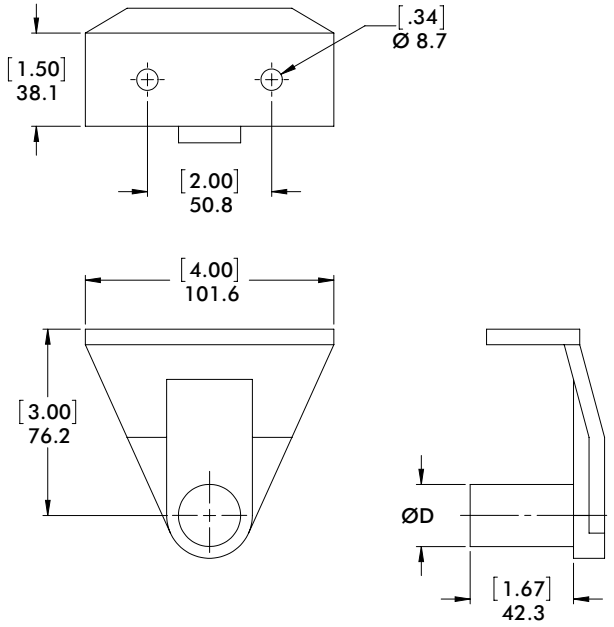

Model Number	ØD	Weight
CPI-EST-00-1E-24	1 in	142 g [5 oz.]
CPI-EST-00-25-410	25mm	142 g [5 oz.]

EST Apple Core Version

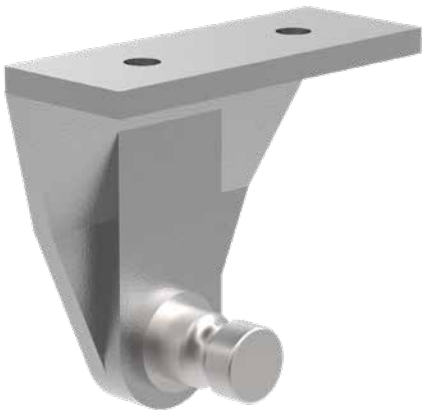

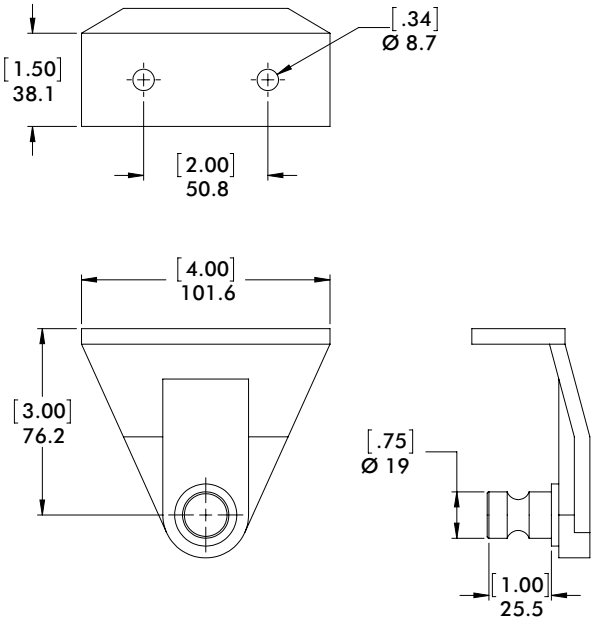

Model Number	Weight
CPI-EST-00-075-24	142 g [5 oz.]
CPI-EST-00-19-410	142 g [5 oz.]

Dimensions and technical information are subject to change without notice

NEST PAD BRACKETS

Round Tooling | Dimensions | Technical Specifications

EST 90° Version

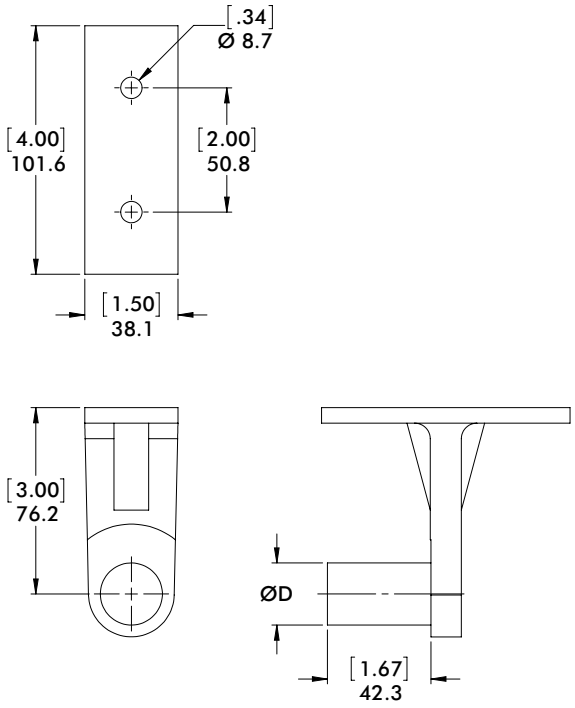



Model Number	ØD	Weight
CPI-EST-90-1E-24	1 in	142 g [5 oz.]
CPI-EST-90-25E-410	25mm	142 g [5 oz.]

EST Apple Core 90° Version

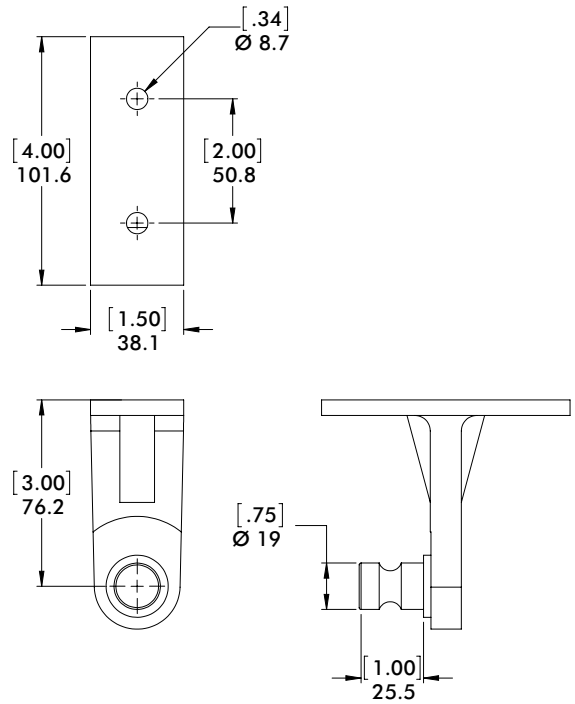

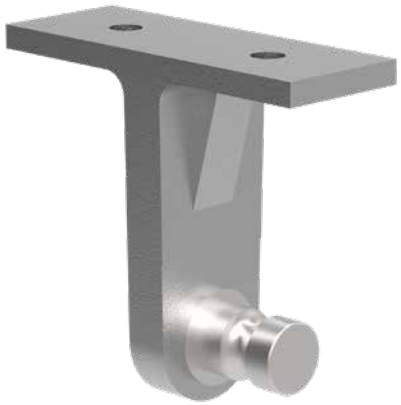

Model Number	Weight
CPI-EST-90-075-24	142 g [5 oz.]
CPI-EST-90-19-410	142 g [5 oz.]

NEST PAD BRACKETS

Round Tooling | Dimensions | Technical Specifications

AB Version

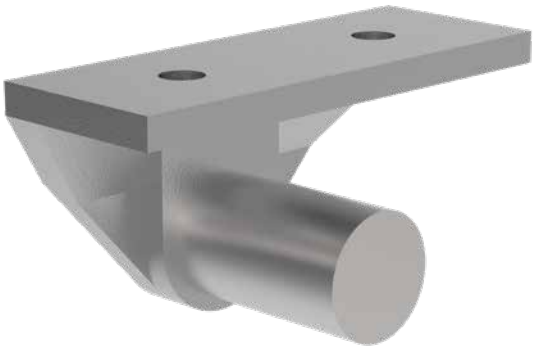

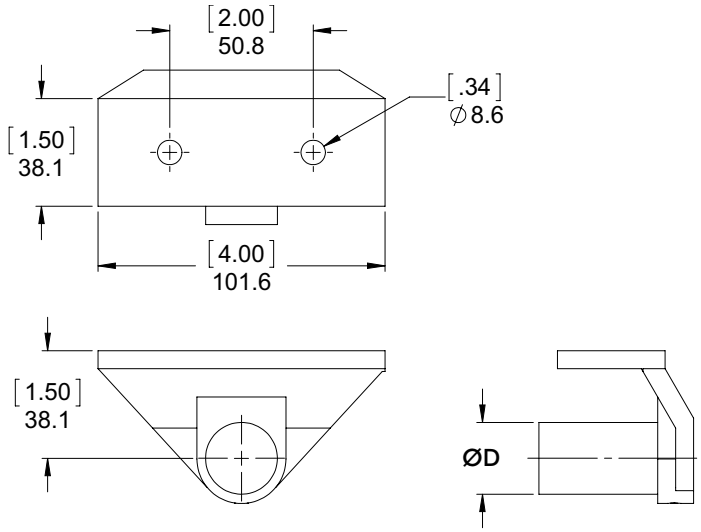

Model Number	ØD	Weight
CPI-AB-00-1E-24	1 in	142 g [5 oz.]
CPI-AB-25-410	25mm	142 g [5 oz.]

AB Apple Core Version



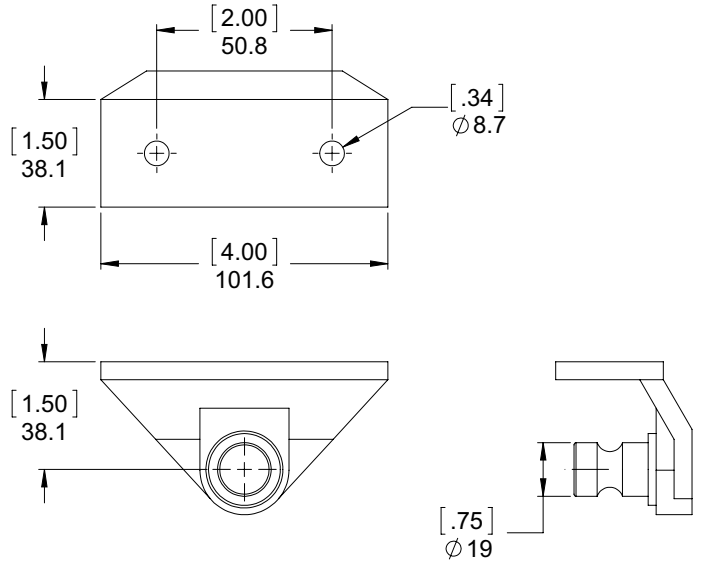

Model Number	Weight
CPI-AB-750-24	142 g [5 oz.]
CPI-AB-19-410	142 g [5 oz.]

Dimensions and technical information are subject to change without notice

NEST PAD BRACKETS

Round Tooling | Dimensions | Technical Specifications

AB 90° Version

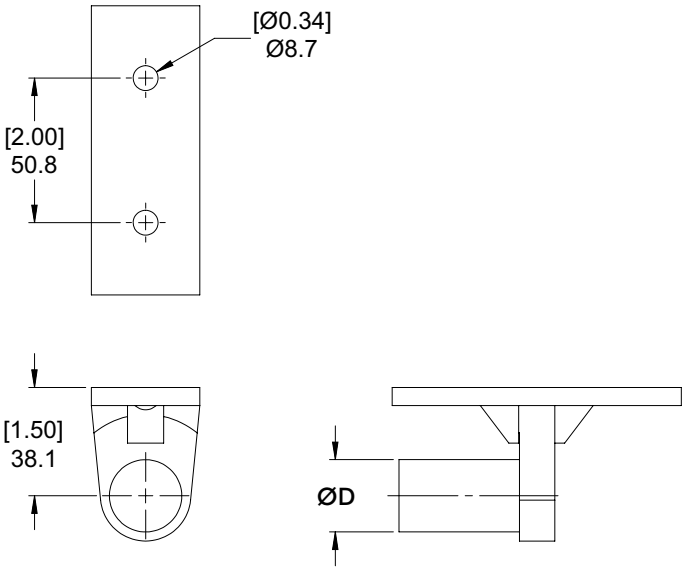



Model Number	ØD	Weight
CPI-AB-90-1E-24	1 in	142 g [5 oz.]
CPI-AB-90-25-410	25mm	142 g [5 oz.]

AB Apple Core 90° Version

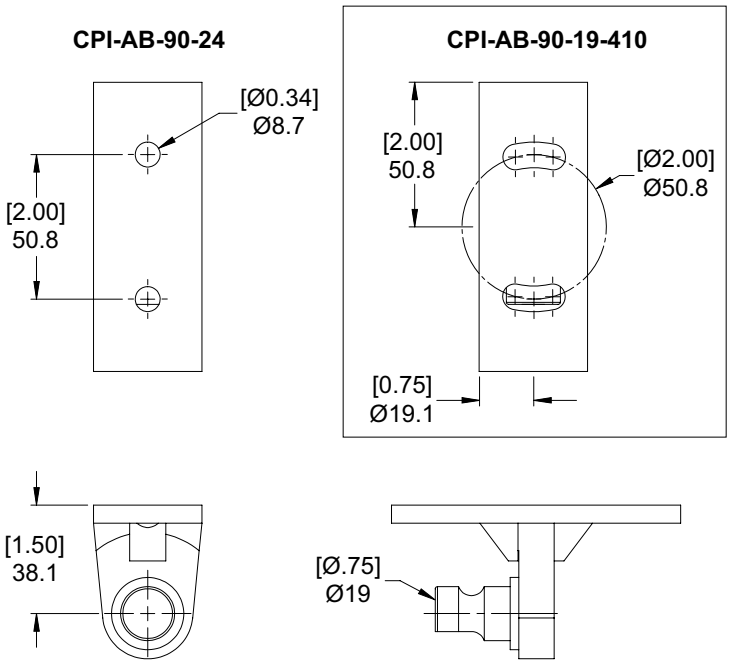

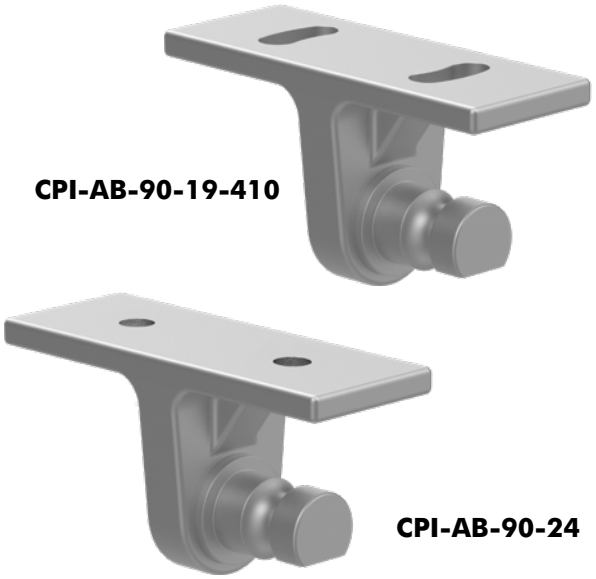

Model Number	Weight
CPI-AB-90-24	142 g [5 oz.]
CPI-AB-90-19-410	142 g [5 oz.]

PROXIMITY SWITCH MOUNT

Round Tooling | Dimensions | Technical Specifications

SAP Series with 1" Extension

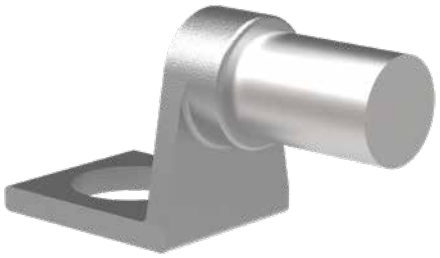

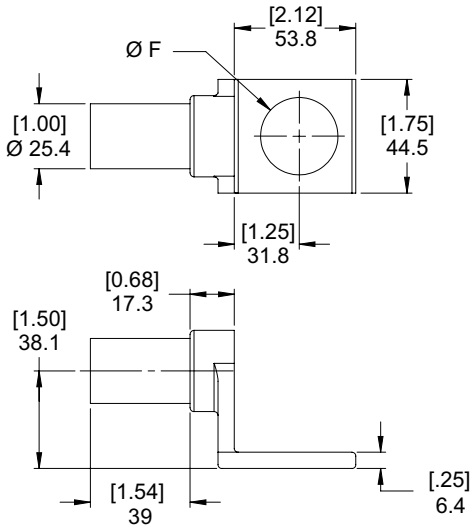

Model Number	(Ø)"F"	Weight
CPI-SAP-**18-1E**	[0.71] 18	[0.2 lb] 91 g
CPI-SAP-**30-1E**	[1.18] 30	[0.2 lb] 91 g

SAP Series with Apple Core

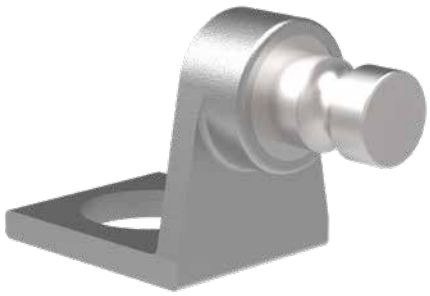

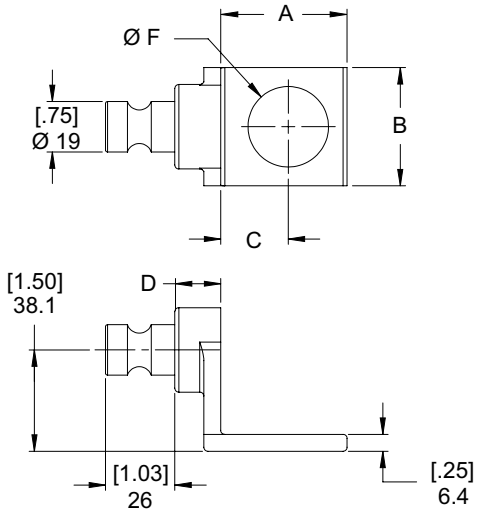

Model Number	A	B	C	D	(Ø)"F"	Weight
CPI-SAP-**00**	[1.88] 47.5	[1.75] 44.5	[1.00] 25.4	[0.68] 17.3	NA	[0.3 lb] 136 g
CPI-SAP-**10**					[0.39] 10	[0.2 lb] 91 g
CPI-SAP-**18**					[0.71] 18	[0.2 lb] 91 g
CPI-SAP-**30**					[1.18] 30	[0.2 lb] 91 g
CPI-SAP-**36**	[2.74] 69.6	[2.38] 60.4	[1.55] 39.4		[1.42] 36	[0.2 lb] 91 g
CPI-SAP-**42**					[1.65] 42	[0.3 lb] 136 g
CPI-SAP-**47**	[2.90] 73.7	[2.68] 68.1	[1.56] 39.62	[0.50] 12.7	[1.85] 47	[0.3 lb] 136 g
CPI-SAP-**54**					[2.13] 54	[0.3 lb] 136 g

PROXIMITY SWITCH BUMPER

Round Tooling | Dimensions | Technical Specifications

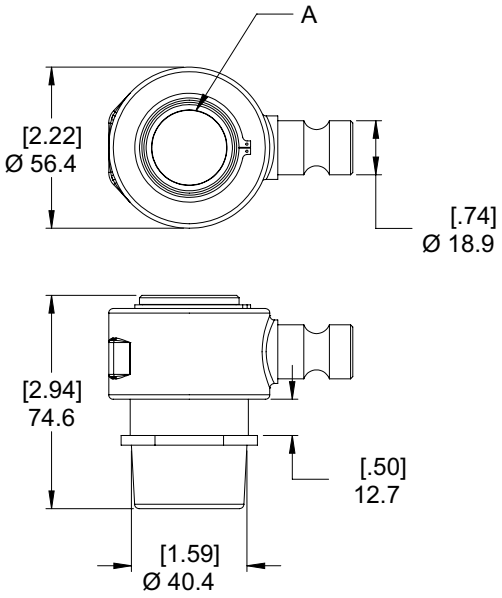

PSM Spring Loaded Bumper



Model Number	(Ø)"A"	Weight
CPI-PSM-**18-75**	[18] 0.71"	[7 oz.] 198 g
CPI-PSM-**30-75**	[30] 1.18"	[7 oz.] 198 g

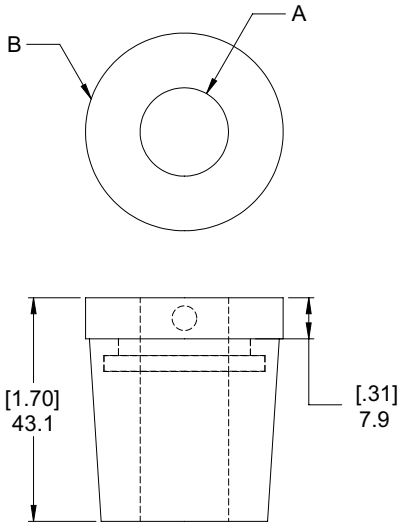

PB Friction Style Bumper



Model Number	(Ø)"A"	(Ø)"B"	Weight
CPI-PB-**18-I**	[18] 0.71	[38.1] 1.50	[2 oz.] 57 g
CPI-PB-**30-I**	[30] 1.18	[50.8] 2.00	[3 oz.] 85 g

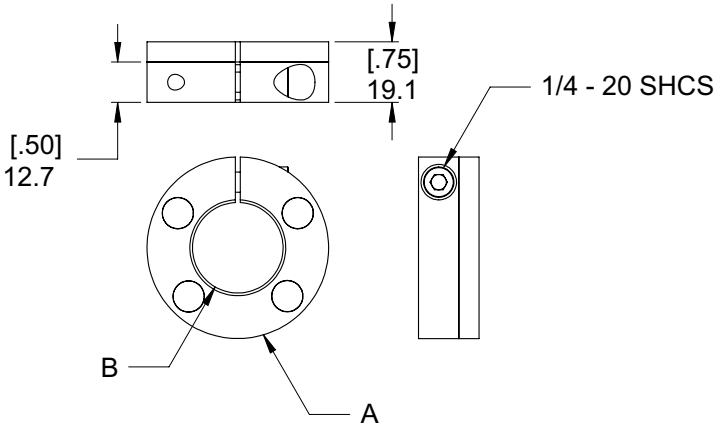

PB Locking Collar Style Bumper

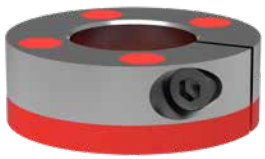

Model Number	(Ø)"A"	(Ø)"B"	Weight
CPI-PB-**30M**	[57.2] 2.25	[30] 1.18	[3 oz.] 85 g
CPI-PB-**36M**	[63.5] 2.50	[36] 1.42	[3 oz.] 85 g
CPI-PB-**42M**	[69.9] 2.75	[42] 1.65	[4 oz.] 113 g
CPI-PB-**47M**	[76.2] 3.00	[47] 1.85	[5 oz.] 141 g
CPI-PB-**54M**	[85.9] 3.38	[54] 2.13	[5 oz.] 141 g

NEST PAD GUIDES

Round Tooling | Dimensions | How To Order

Single



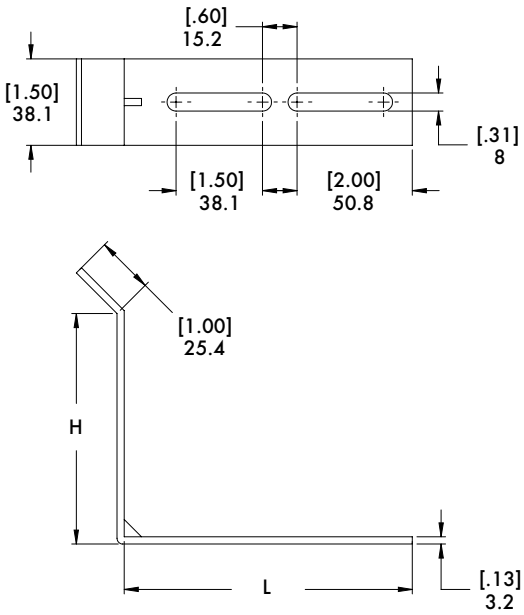

CPI – NPG – 24E – ( ) – ( )

Base Model	Length		Height	
NPG Steel Nest Pad Guides Single	**05**	5.00″	**04**	4.00″
	06	6.00″	**06**	6.00″
	07	7.00″	**08**	8.00″
	08	8.00″		

Wide



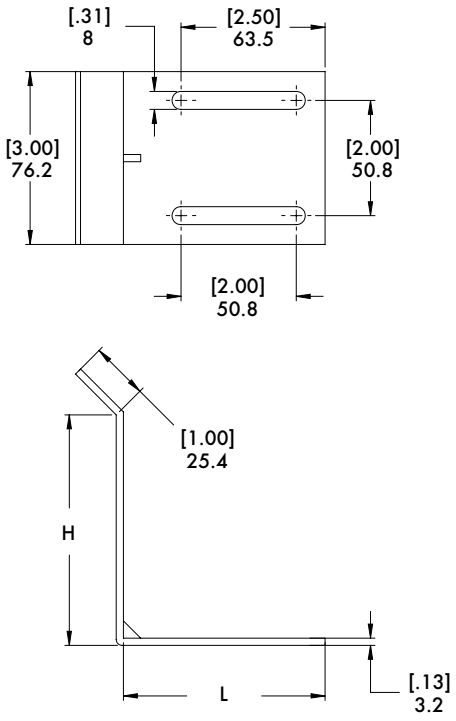

CPI – NPG – 24S – ( ) – ( )

Base Model	Length		Height	
NPG Steel Nest Pad Guides Wide	**3.5**	3.50″	**04**	4.00″
	4.5	4.50″	**06**	6.00″
	5.5	5.50″	**08**	8.00″
	6.5	6.50″		

Dimensions and technical information are subject to change without notice

NEST PAD GUIDES

Round Tooling | Dimensions | How To Order

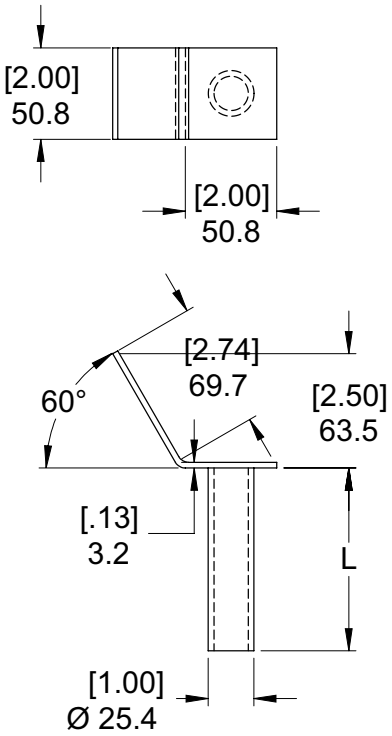



CPI – NPG – 10 – ▢

Base Model

NPG
Steel Nest
Pad Guides

Length

04	4.00″
06	6.00″
08	8.00″
10	10.00″
12	12.00″
14	14.00″

NEST PAD BLOCKS

Round Tooling | Dimensions | Technical Specifications

Bar Stock Urethane

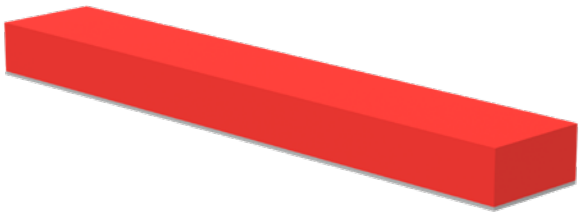

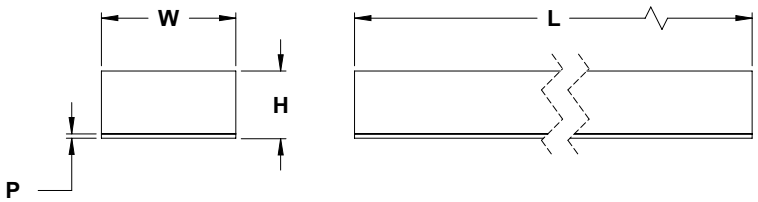

CPI – BS – ☐ – ☐ – ☐ – 24 — Length L 24 24.00″ 609.6 mm

Base Model BS	Overall Height H			Backing Plate Height P			Width W		
Bar Stock 85 Durometer (Shore A) Urethane	**1**	1.00″	25.4 mm	**1/8**	0.13″	3.2 mm	**1**	1.00″	25.4 mm
	2	2.00″	50.8 mm	**1/4**	0.25″	6.4 mm	**2**	2.00″	50.8 mm
	3	3.00″	76.2 mm	**3/8**	0.38″	9.6 mm	**3**	3.00″	76.2 mm
	4	4.00″	101.6 mm	**1/2**	0.50″	12.7 mm	**4**	4.00″	101.6 mm
	5	5.00″	127 mm	**1***	1.00″	25.4 mm			
	6	6.00″	152.4 mm	*Not available for 1″ Overall Height.					

Urethane Pads

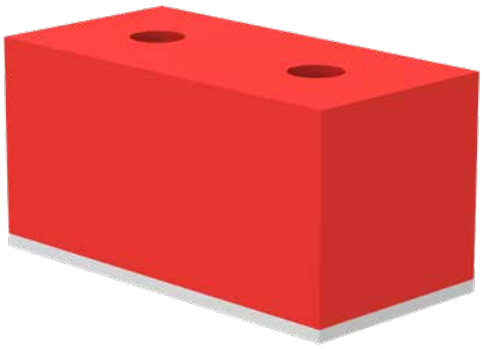

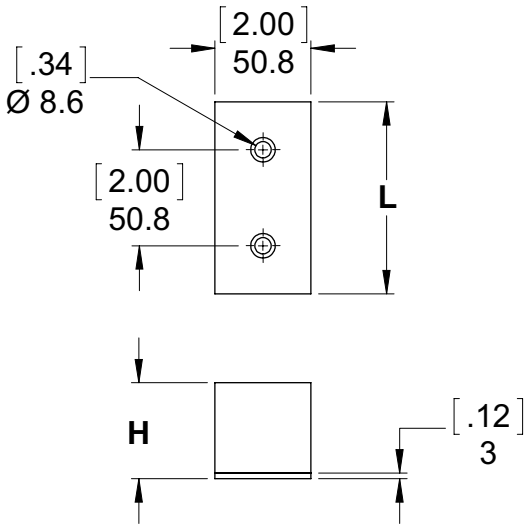

85 Durometer (Shore A) Urethane

Model	"H"	"L"	Weight
CPI-UT-**1-4-85**	**1.00"**(in)	**4.00"**(in)	9oz. [255g]
CPI-UT-**2-4-85**	**2.00"**(in)	**4.00"**(in)	14oz. [397g]
CPI-UT-**2-6-85**	**2.00"**(in)	**6.00"**(in)	19oz. [539g]

Dimensions and technical information are subject to change without notice

NEST PAD BLOCKS

Round Tooling | Dimensions | Technical Specifications

Ribbed Pads Neoprene

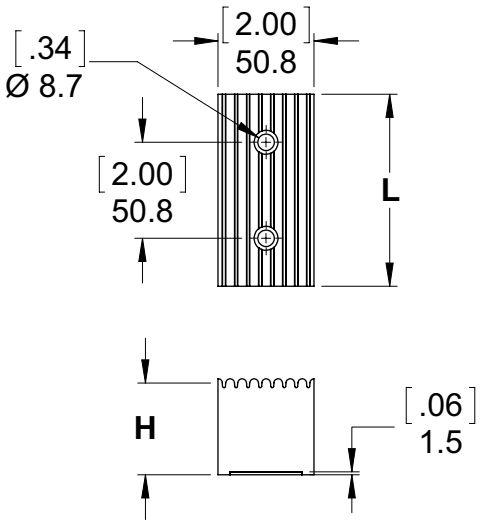

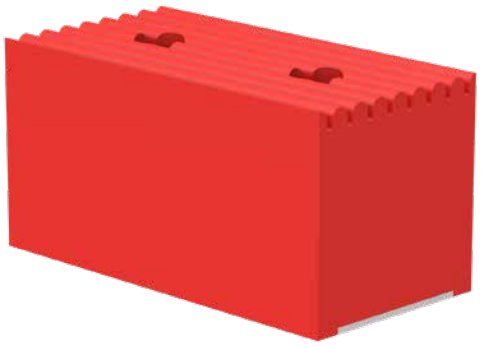

CPI – RT – ◯ – ◯ – ◯

Base Model
RT

Ribbed Pads Neoprene

Overall Height
H

1/2	0.50″	12.7 mm
1	1.00″	25.4 mm
2	2.00″	50.8 mm
3	3.00″	76.2 mm
4	4.00″	101.6 mm

Length
L

4	4.00″	101.6 mm
6	6.00″	152.4 mm
8	8.00″	203.2 mm
12	12.00″	304.8 mm

Durometer
(Shore A)

15	Tan
30	Teal
45	Red
60	Black

PLASTICS - BLUE SLICE

Round Tooling | Dimensions | Technical Specifications

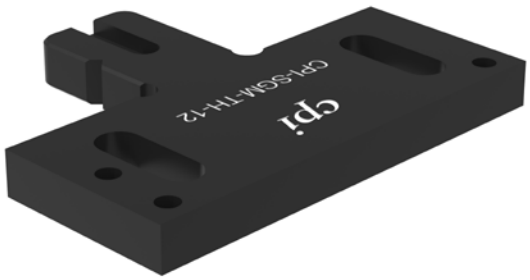

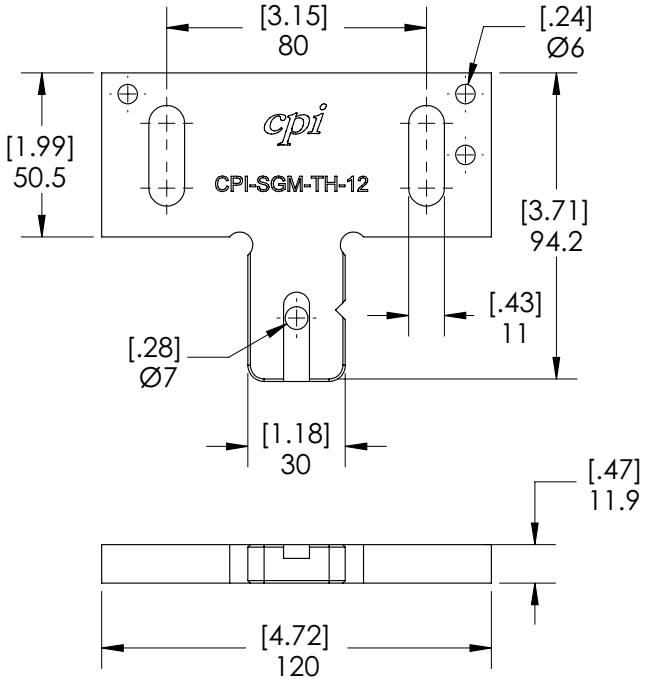

Model Number	Material	Weight
CPI-SGM-TH-12	Steel	604g [1.33 lb]

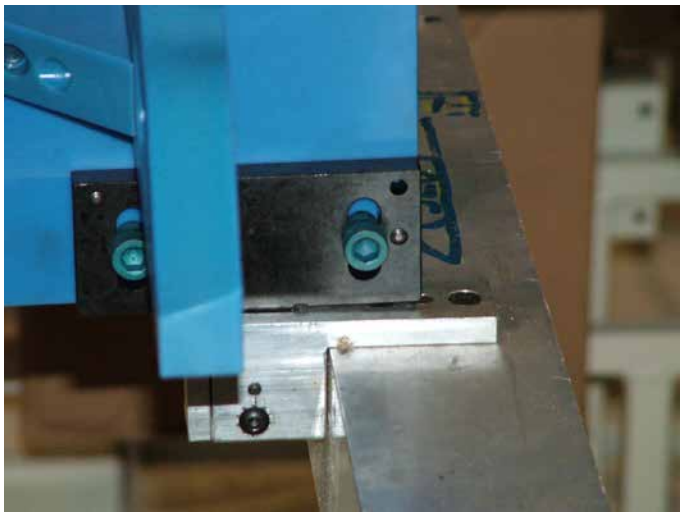

Name: Blue Slice Nest Tooling
Material: Blue Nylon, 1" (25.4mm) thickness
Benefits: Lightweight, durable, machinable material
Process: Machined from 3D CAD

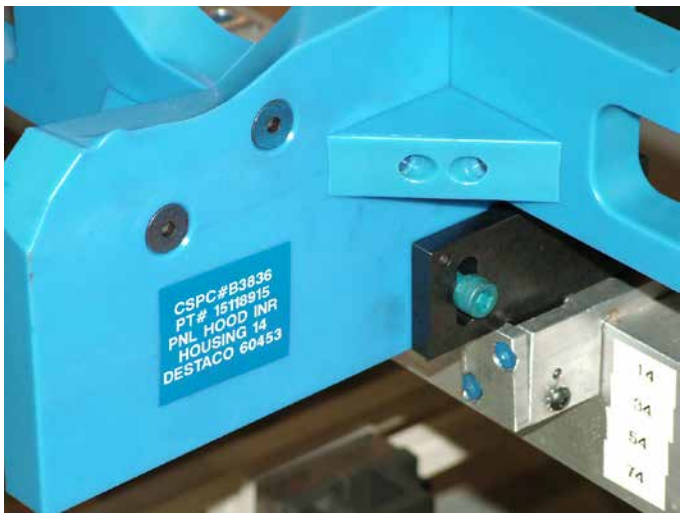



Dimensions and technical information are subject to change without notice

Tool Storage Cart

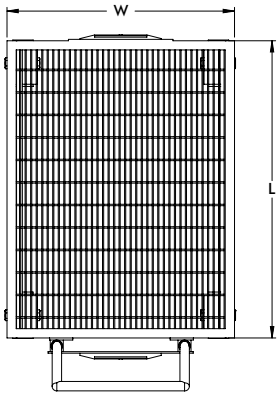



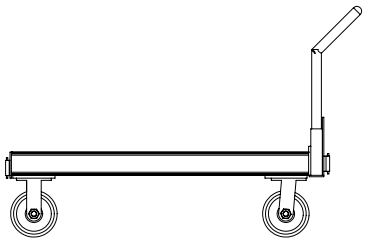

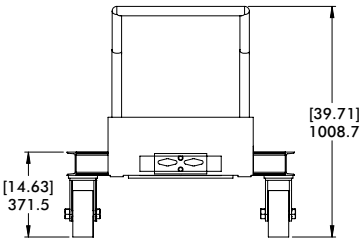

CPI – TC – ( ) – ( ) – DP – FP

Base Model	Width			Length		
TC Tool Storage Carts	**36**	36.00″	0.9 m	**48**	48.00″	1.2 m
	48	48.00″	1.2 m	**60**	60.00″	1.5 m
				72	72.00″	1.8 m
				84	84.00″	2.1 m
				96	96.00″	2.4 m

Tool Hanger

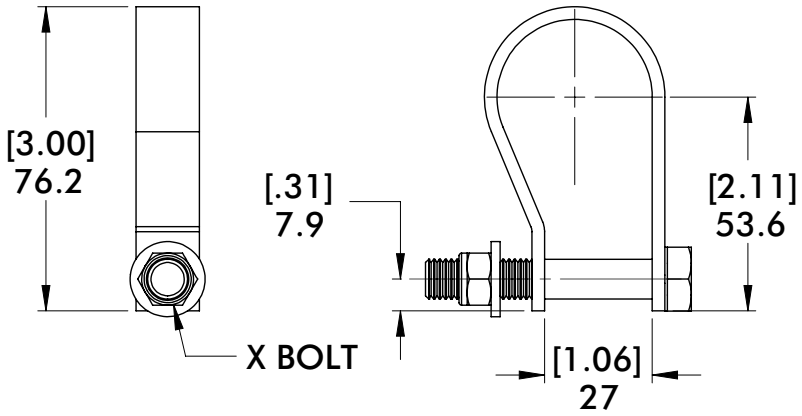



Material: Steel

Model Number	Weight
CPI-THR-516	91g [0.20 lb]

TOOL STORAGE

Round Tooling | Dimensions | How To Order

Tool Holder Strap



Model Number	Weight
CPI-SGM-TH-CABLE-08	68g [0.15 lb]

Tool Storage Can

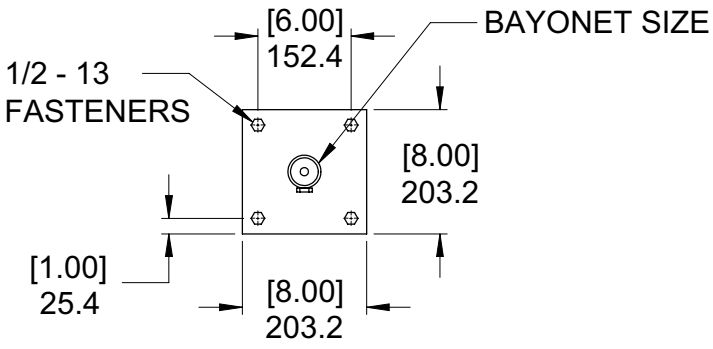



Material: Steel

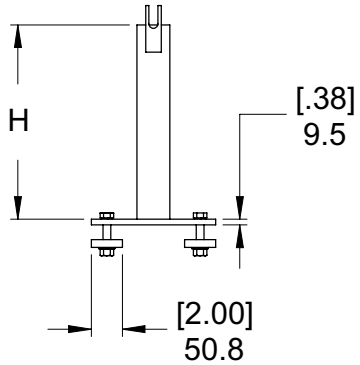

CPI – TH – ____ – ____ – BF

Base Model	Bayonet Size			Height		
TH Tool Holder	**150**	1.5″	40 mm	**6.5**	6.5″	165 mm
	250	2.5″	60 mm	**12.5**	12.5″	318 mm
				18.5	18.5″	470 mm

Dimensions and technical information are subject to change without notice

Notes

Tolerance Specifications

(Ø) "D" vs. Actual (Ø) Bore Sizes (Micro)				(Ø) "D" vs. Actual (Ø) Bore Sizes (Typical)					
(Ø) "D"	Tolerance	(Ø) "D"	Tolerance	(Ø) "D"	Tolerance	(Ø) "D"	Tolerance	(Ø) "D"	Tolerance
.50"(in)	±.002	**12mm**	±.13	**1.00"**(in)	±.002	**25mm**	±.13	**1.25"**(in)	±.002
.75"(in)	±.002	**20mm**	±.13	**1.50"**(in)	±.006	**40mm**	±.15	**3.00"**(in)	±.006
1.00"(in)	±.002	**25mm**	±.13)	**2.50"**(in)	±.006	**60mm**	±.15	**30mm**	±.13

VACUUM SOLUTIONS

Table of Contents


Vaccum Cups 3


Magnets.....28


EcoCup 29


Vacuum Generation 31


Spring Cup Mounts 37


Double Blank Detector Mounts 46


Manifolds.....53

VACUUM PRODUCTS

DESTACO vacuum cups can be ordered in different types, sizes, materials and durometers to be used in a broad array of applications, ranging from sheet metal handling to plastics to glass.





DESTACO also provides vacuum cups for extreme temperatures and hot-forming applications

EcoCup™ is the world's first electric vacuum cup, creating vacuum without air. The **EcoCup™** is ideal for pick-and-place applications of flat, rigid, non-porous parts, including plastic, glass, and other consumer goods with smooth, flat surfaces.









ARV® The original, patented **Auto-Release Venturi** offers users the fastest vacuum and blow-off in the industry with single line operation, integrated blow-off and standard silencer.

Destacker Double Blank Detectors (DBD) allows compliance to blanks within ±15° without needing to adjust the robot, automation or tooling.

NITRILE VACUUM CUPS

Vacuum Products | Families and Features

Round Destacker Vacuum Cup

- Designed specifically for pogo-style destacking applications.
- High compressive-strength and shock-resistance extends cup life.
- High vertical lifting capacity prior to part release.
- Provides low-impact part release during pull-off by utilizing the patented stress relief port.

US Patents #7,309,089
7,712,807







Round Traction Vacuum Cups

- For applications with slick/oily surfaces or for destackers.
- Internal cleats holds part more securely in high speed applications.
- Bellows add flexibility for minor misalignments.



Round Flatfoot Vacuum Cups

- For applications with flat to medium curvature and dry to medium slick/oily surfaces.
- Cleats provide full support to prevent damage to thin outer panels.
- Maximizes lifting capacity and minimizes slip.



Round Belcup Vacuum Cups

- For applications with flat to mild contoured surfaces.
- Bellows add flexibility for minor misalignments.
- Ideal for general purpose.



Round Deepdish Vacuum Cups

- For applications with contoured surfaces.
- Thin lip wraps and seals curved surfaces tightly.
- Bell structure and internal design works best on materials with convex surfaces.



Oval Flatfoot Vacuum Cups

- For applications with medium slick/oily to dry surfaces.
- Oval shape maximizes contact on narrow panels and maximizes vertical lifting capacity.
- Cleats provide full support to prevent damage to thin outer panels.



Oval Deepdish Vacuum Cups

- For applications with contoured surfaces as well as wet or oily surfaces.
- Oval shape maximizes contact on narrow panels and bell structure works well on materials with convex surfaces.

Dimensions and technical information are subject to change without notice

POLYURETHANE VACUUM CUPS



Round Bellows Vacuum Cups

- For applications with slick/oily surfaces or for destackers
- Bellows add flexibility for minor misalignments
- Dual Durometer Polyurethane - Outside 55 durometer (red), internal treads 60 durometer (dark green)
- Optional TCT (Triple durometer) style cup offers extra soft internal cleat to eliminate possible dimples on thin sheet metal



Round Flat Foot Vacuum Cups

- Works well on flat to slightly contoured parts
- Maximizes lifting capacity and minimizes slip
- Excellent for transverse loads with high acceleration and deceleration applications
- Dual Durometer Polyurethane - Outside 55 durometer (red), internal treads 60 durometer (dark green)



Round Deepdish Vacuum Cups

- Interchangeable with existing/competitor vacuum cups
- New bell shape design is excellent for highly contoured surfaces
- Optional lightweight plastic mount available
- Designed to handle higher acceleration/deceleration speeds
- Shape and design offers better transverse loading



Oval Bellows Vacuum Cups

- Works well on flat and contoured parts
- Maximum lifting capacity where limited space is available
- Bellows add flexibilty for minor misalignments
- Dual Durometer Polyurethane - Outside 55 durometer (red), internal treads 60 durometer (dark green)



Oval Flat Foot Vacuum Cups

- Works well on flat to slightly contoured parts.
- Long oval shape maximizes contact on narrow surfaces
- Cleats provide full support to prevent damage to thin outer panal
- Dual Durometer Polyurethane - Outside 55 durometer (red), internal treads 60 durometer (dark green)

CHOOSE THE RIGHT VACUUM CUP FOR YOUR APPLICATION

Vacuum Products | Application, Characteristics and Usage Chart for Vacuum Cups

Nitrile Vacuum Cups	DESTACKER APPLICATION	FLAT CONTOURS	MILD CONTOURS	HIGH CONTOURS	SLICK/OILY SURFACES	DRY SURFACES	HOT FORMING	Application Direction
US Patents #7,309,089 7,712,807  Destacker Vacuum Cups	5	5	N/A	N/A	3	5	N/A	VERTICAL
	N/A	N/A	N/A	N/A	N/A	N/A	N/A	HORIZONTAL
 Round Traction Vacuum Cups	4	5	4	2	5	5	N/A	VERTICAL
	N/A	5	3	1	5	5	N/A	HORIZONTAL
 Round Flatfoot Vacuum Cups	4	4	5	3	4	4	N/A	VERTICAL
	N/A	4	5	3	4	4	N/A	HORIZONTAL
 Round Belcup Vacuum Cups	4	5	4	2	3	4	N/A	VERTICAL
	N/A	3	3	1	2	4	N/A	HORIZONTAL
 Round Deepdish Vacuum Cups	1	1	3	5	3	3	N/A	VERTICAL
	N/A	1	3	5	3	3	N/A	HORIZONTAL
 Oval Deepdish Vacuum Cups	1	3	4	2	4	3	N/A	VERTICAL
	N/A	3	4	2	3	3	N/A	HORIZONTAL
 Oval Flatfoot Vacuum Cups	3	4	3	1	4	4	N/A	VERTICAL
	N/A	4	3	1	3	4	N/A	HORIZONTAL
 Hot Forming Vacuum Cups	3	3	2	1	3	4	5	VERTICAL
	N/A	3	2	1	2	3	5	HORIZONTAL

Worst Cup for the Job 1 2 3 4 5 **Best** Cup for the Job

N/A ***Not Advised*** *for the application*

This chart is a guide to aid in selecting the right family of cup for general surfaces, contours, and applications.

Dimensions and technical information are subject to change without notice

CHOOSE THE RIGHT VACUUM CUP FOR YOUR APPLICATION

Vacuum Products | Application, Characteristics and Usage Chart for Vacuum Cups

Polyurethane Vacuum Cups	DESTACKER APPLICATION	FLAT CONTOURS	MILD CONTOURS	HIGH CONTOURS	SLICK/OILY SURFACES	DRY SURFACES	HOT FORMING	Application Direction
 Round Bellows Vacuum Cups	4	5	4	2	5	5	N/A	VERTICAL
	N/A	5	3	1	5	5	N/A	HORIZONTAL
 Round Flat Foot Vacuum Cups	4	4	5	2	4	5	N/A	VERTICAL
	N/A	4	5	2	4	5	N/A	HORIZONTAL
 Round Deepdish Vacuum Cups	3	4	5	5	4	5	N/A	VERTICAL
	3	4	5	5	4	5	N/A	HORIZONTAL
 Oval Bellows Vacuum Cups	3	4	4	2	4	5	N/A	VERTICAL
	N/A	4	3	2	3	5	N/A	HORIZONTAL
 Oval Flat Foot Vacuum Cups	3	4	3	2	3	5	N/A	VERTICAL
	N/A	3	3	2	2	5	N/A	HORIZONTAL

Worst Cup for the Job 1 2 3 4 5 Best Cup for the Job

N/A ***Not Advised*** *for the application*

This chart is a guide to aid in selecting the right family of cup for general surfaces, contours, and applications.

CHOOSE THE RIGHT VACUUM CUP FOR YOUR APPLICATION

Vacuum Products | ACU Index, How Vacuum Cups Work, Cup Usage, and Safety Factor

Application, Characteristics, and Usage (ACU) Index

Determining the type and durometer of vacuum cup appropriate for a particular application is typically based on three criteria.

- *How oily or slick the part surface is.*
- *How much contour or curvature the part has.*
- *How long you can expect the cup to last (Longevity)?*

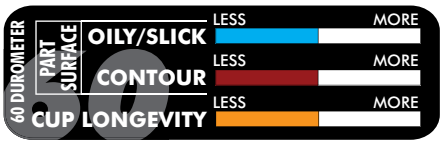

A set of vacuum cups of the same size and type, each having different durometers may handle oily/slick or contoured parts differently. However, cup longevity of each may be affected as a result of durometer, application and usage. The ACU Index is a reference shown with each type of vacuum cup and is used to illustrate the differences between vacuum cup types and durometers, when considering the above criteria.

How Vacuum Cups work

A panel adheres to a vacuum cup because the surrounding pressure (atmospheric pressure) is greater than the pressure inside the vacuum cup. The greater pressure pushes the panel onto the cup.

To create the low pressure in the vacuum cup, it is connected to a vacuum generator. The lower the pressure (higher vacuum) inside the cup; the greater the lifting force of the suction cup.

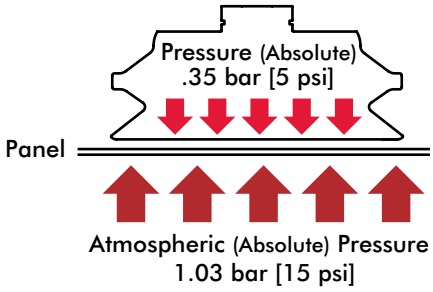

Vacuum Cup Usage

It is important to use the proper size and quantity of vacuum cups needed for your application. There are five steps which will help you make sure your application has the appropriate vacuum cup usage.

Step 1: Determine application and find appropriate cup family type.

Step 2: Determine panel weight.

Step 3: Find maximum cup size based on panel contour and shape.

Step 4: Find the appropriate cup size lifting capacity in the chart, found on the catalog page featuring the cup family type chosen.

Step 5: Determine safety factor determined on application (See Below).

Use the formula on the right to determine the proper amount of cups needed to move your panel.

Formula

$$n = \frac{w \times s}{f}$$

w = Weight of Panel
f = Lifting force of cup
s = Safety factor
n = Number of cups

Weight and lifting force must be in the same units, either English or Metric.

Safety Factor

Ideal plant conditions*: (2)

Fast moving robot: (+1)
Slick or Oily Panel: (+1)
Flexing Panel: (+2)
Small cups: (+1)
High Horizontal Loads: (+1)

Starting with Ideal conditions (2), add each additional conditions to determine total safety factor.

For example:

Ideal conditions:	2
Fast moving robots:	+1
Flexing Panel:	+2
Total Safety Factor	**5**

(*)Ideal conditions are defined as having no surface, operational, or environmental conditions which could adversely effect the performance to the vacuum cup.

Relative Cup Motion

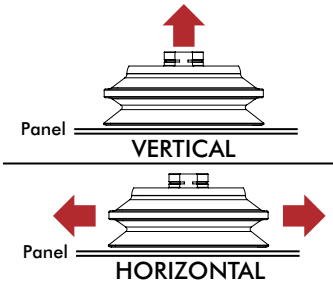

VACUUM CUP OPTIONS

Vacuum Products | Durometer and Mounting Options

DESTACO Vacuum Cups are offered in different families, and may be offered in different durometers. Vacuum cups are also offered in Imperial and Metric mounting options which may vary according to the size and type of the vacuum cup.

Vacuum cups can be ordered as follows:
CPI-"MODEL"-"Mounting"-"DuRometer"



Vacuum Cup Durometers ("DR") *(Color equals Durometer (Shore A Scale))*

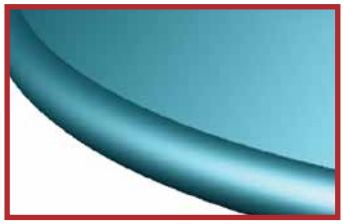

30

This soft durometer is useful for dryer, contoured panels. However, this durometer has less life.



45

This medium hard durometer will seal and adapt to contours well and is good for all around usage. This durometer has a longer life than the 30 durometer.



60

This hard durometer is helpful for extremely oily panels and flat surfaces such as a destacker operation. This durometer has a longer life than the 45 durometer.



PU55/PU60

This durable long-lasting polyurethane material is resistant to oils, UV light and oxygen. No dry rotting or cracking with better elastic memory.

~~XX~~ = *Durometer not available in cup style.*

Imperial Vacuum Cup Mounting Options ("M")



K — 1/4" NPT

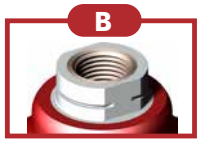

B — 3/8" NPT



C — 1.25" SQUARE



D — 1/2" NPT



U-18 — 1/8" NPT MALE



E1 — QUICK DISCONNECT

Metric Vacuum Cup Mounting Options ("M")



A — 1/4" G

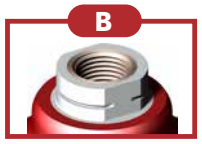

B — 3/8" G



C — 1.25" SQUARE

M CUP = *Mount only available in this cup size.*

M ~~CUP~~ = *Mount not available in this cup size.*

Micro Industrial Mounting Options ("M")



10M — 10-32 MALE



18F — 1/8" G FEMALE



18M — 1/8" G MALE

Specialty Vacuum Cup Mounting Options ("M")



M10 — M10 MALE



M8F — M8 FEMALE



SB — SMOOTH BORE

Polyurethane Mounting Options ("M")



U38 — 3/8 NPT



P38 — Nylon G3/8



G38 — G3/8



C — 1.25 in. Square

ACCELERATE® COLLECTION VACUUM CUPS

Vacuum Products | Dimensions | Ordering Information

TC Polyurethane Round Bellows





TCT (triple durometer) style cup offers extra soft, 30 durometer, internal cushion (yellow) to eliminate possible dimples on thin sheet metal.

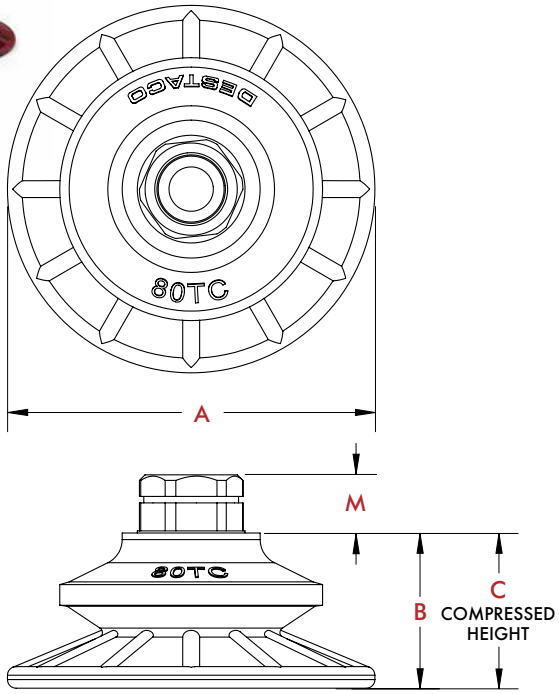

Specifications:
Temperature:
10°-49° C [50°-120° F]
Materials: Dual Durometer Polyurethane - Outside 55 durometer (red), internal treads 60 durometer (dark green).

mm [INCH]
THIRD ANGLE PROJECTION

Mount	M
U38/G38	[0.57] 14.5
P38	[0.85] 21.5
C	[0.73] 18.5

Dimensions shown "[inch] mm"

TC Dimensions

Model	A	B	C	Weight
30TC	[1.18] 30	[0.57] 14.5	[0.37] 9.5	[1.00 oz] 28 g
40TC	[1.77] 45	[0.69] 17.5	[0.41] 10.5	[1.20 oz] 34 g
60TC	[2.40] 61	[0.85] 21.5	[0.45] 11.5	[2.15 oz] 61 g
80TC/ **80**TCT	[3.35] 85	[1.40] 35.5	[0.85] 21.5	[4.97 oz] 141 g
110TC/ **110**TCT	[4.53] 115	[2.03] 51.5	[1.20] 30.5	[9.70 oz] 275 g

Dimensions shown "[inch] mm"

TC Holding Capacity @ -0.6 bar vacuum

Appl.	Vert. Lift	Horz. Dry	Horz. Wet
30TC	[6] 2.72	[3] 1.36	[1.75] 0.79
40TC	[18] 8.16	[13] 5.90	[10] 4.54
60TC	[25] 11.34	[27] 12.25	[20] 9.07
80TC/ **80**TCT	[53] 24.04	[54] 24.49	[36] 16.33
110TC/ **110**TCT	[85] 38.56	[78] 35.38	[57] 25.86

Holding capacities shown "[lbs] kg"

TC Round Bellows Ordering Information

Metric

Ø30mm ..... VC-**30TC**-(**M**)-PU55
Ø45mm ..... VC-**40TC**-(**M**)-PU55
Ø61mm ..... VC-**60TC**-(**M**)-PU55
Ø85mm ..... VC-**80TC**-(**M**)-PU55
Ø85mm ..... VC-**80TCT**-(**M**)-PU55
Ø115mm ..... VC-**110TC**-(**M**)-PU55
Ø115mm ..... VC-**110TCT**-(**M**)-PU55

Mounting Options ("M")

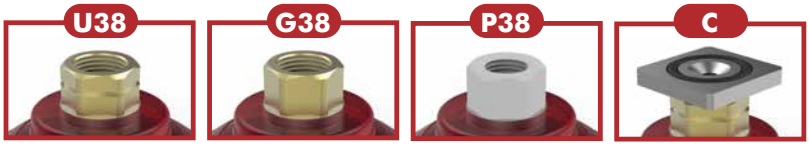

3/8 NPT | G3/8 | Nylon G3/8 | 1.25 in. Square

Dimensions and technical information are subject to change without notice

ACCELERATE® COLLECTION VACUUM CUPS

Specifications:
Temperature:
10°-49° C [50°-120° F]
Materials: Dual Durometer Polyurethane - Outside 55 durometer (red), internal treads 60 durometer (dark green).

FF Polyurethane Round Flat



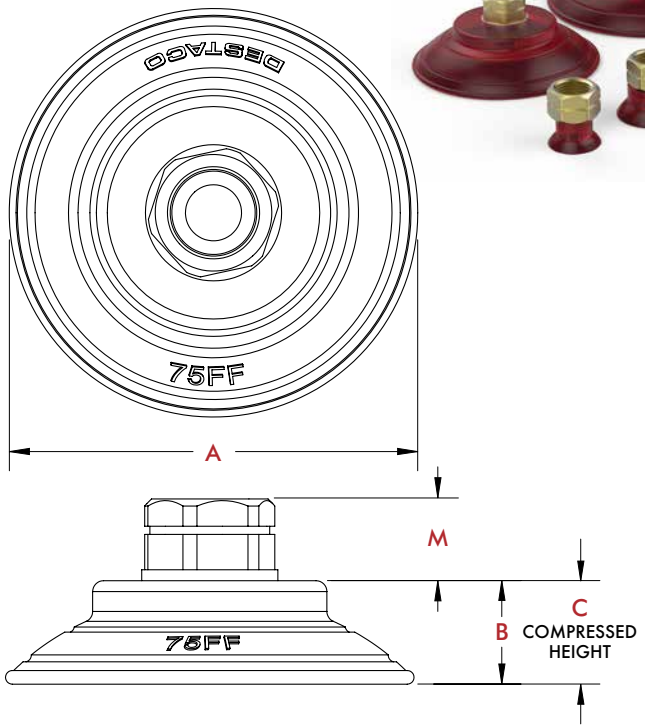

mm [INCH]
THIRD ANGLE PROJECTION

Mount	M
U38/G38	[0.57] 14.5
P38	[0.85] 21.5
C	[0.73] 18.5

Dimensions shown "[inch] mm"

FF Dimensions

Model	A	B	C	Weight
25FF	[0.98] 25	[0.57] 14.5	[0.49] 12.5	[0.36 oz] 10 g
35FF	[1.38] 35	[0.61] 15.5	[0.51] 13	[1.48 oz] 42 g
50FF	[1.97] 50	[0.26] 6.5	[0.51] 13	[2.36 oz] 67 g
75FF	[2.95] 75	[0.77] 19.5	[0.59] 15	[3.21 oz] 91 g
100FF	[3.94] 100	[0.96] 24.5	[0.73] 18.5	[6.06 oz] 172 g
125FF	[4.92] 125	[1.20] 30.5	[0.89] 22.5	[9.88 oz] 280 g

Dimensions shown "[inch] mm"

FF Holding Capacity @ -0.6 bar vacuum

Appl.	Vert. Lift	Horz. Dry	Horz. Wet
25FF	[6] 2.72	[2] 0.91	[1.5] 0.68
35FF	[13] 5.90	[9] 4.08	[7] 3.18
50FF	[24] 10.89	[23] 10.43	[16] 7.26
75FF	[53] 24.04	[47] 21.32	[31] 14.06
100FF	[110] 49.90	[109] 49.44	[46] 20.87
125FF	[146] 66.23	[135] 61.24	[53] 24.04

Holding capacities shown "[lbs] kg"

Mounting Options ("M")

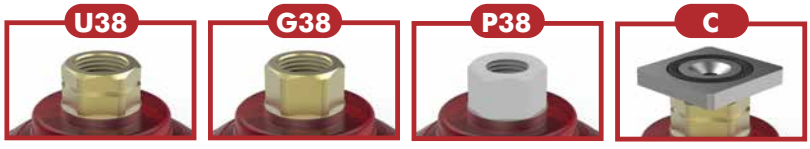

3/8 NPT | G3/8 | Nylon G3/8 | 1.25 in. Square

FF Round Flat Ordering Information

Metric

Ø25mm ..... VC-**25FF**-(**M**)-PU55
Ø35mm ..... VC-**35FF**-(**M**)-PU55
Ø50mm ..... VC-**50FF**-(**M**)-PU55
Ø75mm ..... VC-**75FF**-(**M**)-PU55
Ø100mm ..... VC-**100FF**-(**M**)-PU55
Ø125mm ..... VC-**125FF**-(**M**)-PU55

ACCELERATE® COLLECTION VACUUM CUPS

Vacuum Products | Dimensions | Technical Specifications

DD Polyurethane Round Deepdish



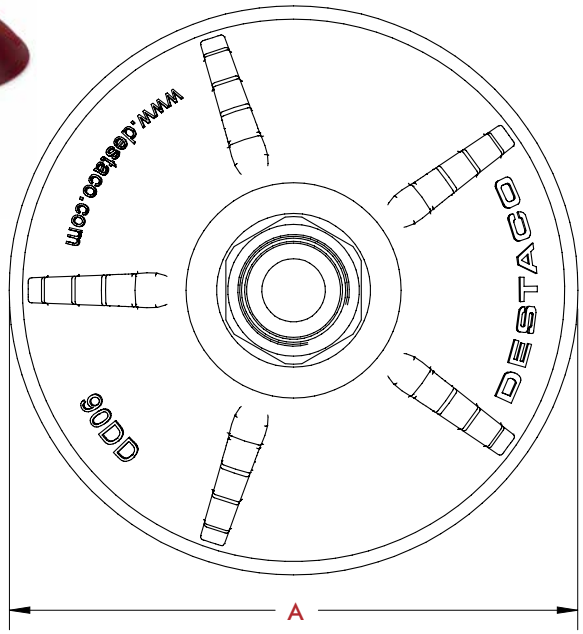

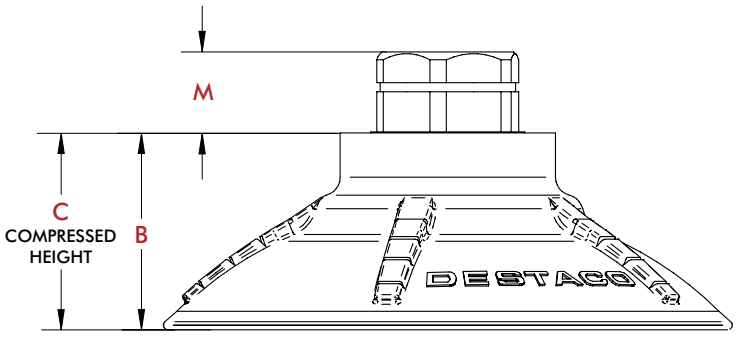

Specifications:
Temperature:
10°-49° C [50°-120° F]
Materials:
60 durometer (red)

mm [INCH]
THIRD ANGLE PROJECTION

Mount	M
U38	[0.51] 13
G38	[0.77] 19.5
P38	[0.68] 17.3
C	[0.37] 9.5

Dimensions shown "[inch] mm"

DD Dimensions

Model	A	B	C	Weight with U38/G38/C	Weight with P38
65DD	[2.66] 67.5	[1.11] 28.2	[0.67] 17.0	[2.08 oz] 59 g	[0.9 oz] 25 g
90DD	[3.64] 92.5	[1.27] 32.2	[0.75] 19.0	[2.72 oz] 77 g	[1.5 oz] 43 g
110DD	[4.43] 112.5	[1.60] 40.6	[0.83] 21.0	[3.60 oz] 102 g	[2.4 oz] 68 g

Dimensions shown "[inch] mm"

DD Holding Capacity
@ -0.9 bar [25.6 inhg] vacuum

Appl.	Vert. Lift	Horz. Dry	Horz. Wet
65DD	[42.8] 19.4	[44.1] 20.0	[30.2] 13.7
90DD	[69.7] 31.6	[80.5] 36.5	[55.8] 25.3
110DD	[97.4] 44.2	[129.0] 58.5	[80.5] 36.5

Holding capacities shown "[lbs] kg"

DD Round Deepdish Ordering Information

Metric

Ø67.5mm ..... VC-**65DD**-(**M**)-PU60
Ø92.5mm ..... VC-**90DD**-(**M**)-PU60
Ø112.5mm ..... VC-**110DD**-(**M**)-PU60

Mounting Options ("M")



3/8 NPT | G3/8 | Nylon G3/8 | 1.25 in. Square

Dimensions and technical information are subject to change without notice

ACCELERATE® COLLECTION VACUUM CUPS

Vacuum Products | Dimensions | Ordering Information



Positioning Kit (for G38 and P38 thread mounts only). Sold separately. Order No. **CPI-LNB-VSA-19** Includes (1) O-ring and (1) locknut.

Specifications:
Temperature: 10°-49° C [50°-120° F]
Materials: Dual Durometer Polyurethane - Outside 55 durometer (red), internal treads 60 durometer (dark green).

TC Polyurethane Oval Bellows



mm [INCH]
THIRD ANGLE PROJECTION

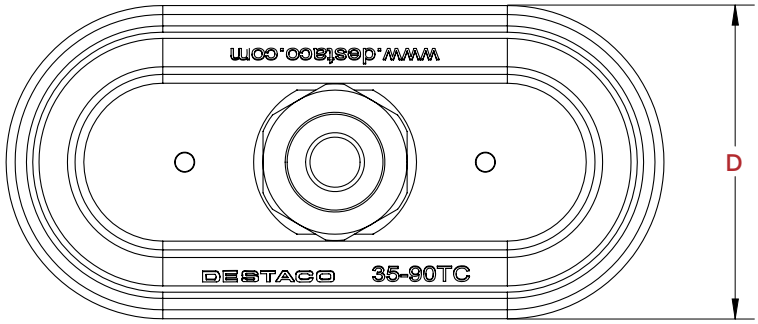

Mount	M
U38/G38	[0.57] 14.5
P38	[0.85] 21.5
C	[0.73] 18.5

Dimensions shown "[inch] mm"

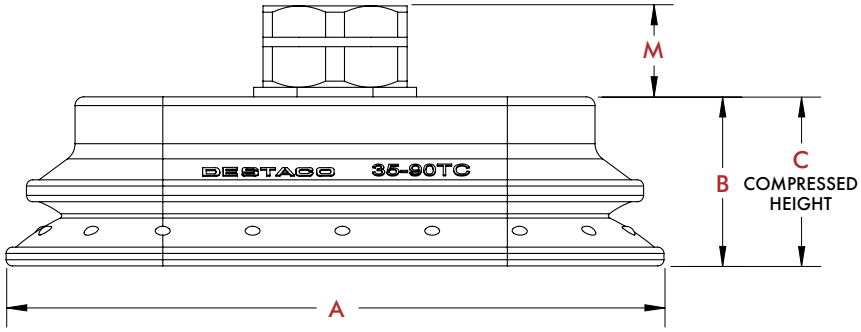

TC Dimensions

Model	A	B	C	D	Weight
35-90TC	[4.13] 105	[1.08] 27.5	[0.65] 16.5	[1.97] 50	[3.42 oz] 97 g
50-140TC	[6.18] 157	[1.40] 35.5	[0.85] 21.5	[2.64] 67	[6.70 oz] 190 g
65-170TC	[7.36] 187	[1.63] 41.5	[1.04] 26.5	[3.23] 82	[10.93 oz] 310 g

Dimensions shown "[inch] mm"

TC Holding Capacity @ -0.6 bar vacuum

Appl.	Vert. Lift	Horz. Dry	Horz. Wet
35-90TC	[45] 20.41	[40] 18.14	[34] 15.42
50-140TC	[99] 44.91	[93] 42.18	[78] 35.38
65-170TC	[128] 58.06	[139] 63.05	[149] 67.59

Holding capacities shown "[lbs] kg"

Mounting Options ("M")

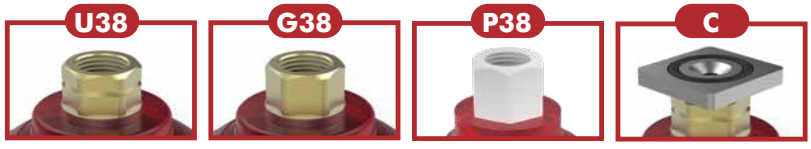

3/8 NPT | G3/8 | Nylon G3/8 | 1.25 in. Square

TC Oval Bellows Ordering Information

Metric

Ø50x105mm ..... VC-**35-90TC**-(**M**)-PU55
Ø67x157mm ..... VC-**50-140TC**-(**M**)-PU55
Ø82x187mm ..... VC-**65-170TC**-(**M**)-PU55

ACCELERATE® COLLECTION VACUUM CUPS

Vacuum Products | Dimensions | Ordering Information

FF Polyurethane Oval Flat



Specifications:
Temperature:
10°-49° C [50°-120° F]
Materials: Dual Durometer Polyurethane - Outside 55 durometer (red), internal treads 60 durometer (dark green).

Positioning Kit (for G38 and P38 thread mounts only). Sold separately. Order No. **CPI-LNB-VSA-19** Includes (1) O-ring and (1) locknut.



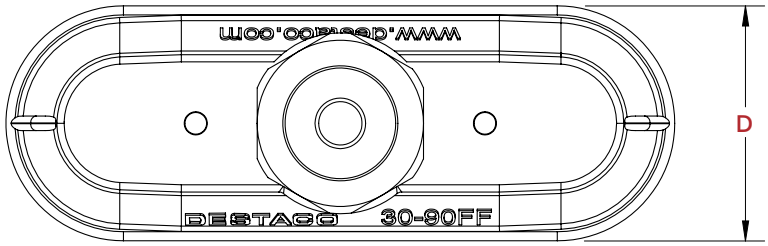

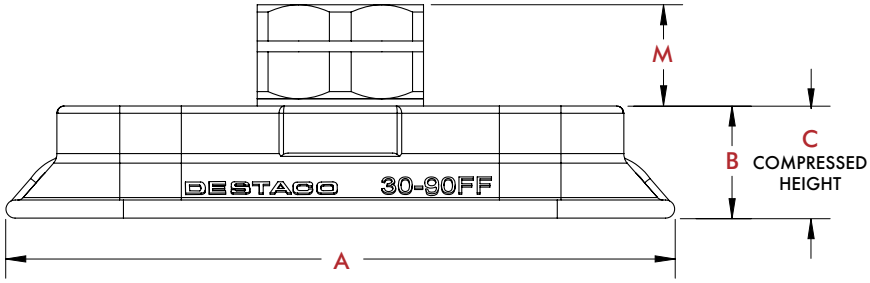

mm [INCH]
THIRD ANGLE PROJECTION

Mount	M
U38/G38	[0.57] 14.5
P38	[0.85] 21.5
C	[0.73] 18.5

Dimensions shown "[inch] mm"

FF Dimensions

Model	A	B	C	D	Weight
20-80FF	[3.31] 84	[0.61] 15.5	[0.49] 12.5	[0.94] 24	[0.85 oz] 24 g
30-90FF	[3.66] 93	[0.61] 15.5	[0.45] 11.5	[1.30] 33	[1.05 oz] 30 g
40-110FF	[4.45] 113	[0.85] 21.5	[0.65] 16.5	[1.69] 43	[1.94 oz] 55 g

Dimensions shown "[inch] mm"

FF Holding Capacity @ -0.6 bar vacuum

Appl.	Vert. Lift	Horz. Dry	Horz. Wet
20-80FF	[25] 11.34	[25] 11.34	[11] 4.99
30-90FF	[35] 15.88	[36] 16.33	[17] 7.71
40-110FF	[55] 24.95	[52] 23.59	[18] 8.16

Holding capacities shown "[lbs] kg"

FF Oval Flat Ordering Information

Metric

Ø24x84mm ..... VC-**20-80FF**-(**M**)-PU55
Ø33x93mm ..... VC-**30-90FF**-(**M**)-PU55
Ø43x113mm ..... VC-**40-110FF**-(**M**)-PU55

Mounting Options ("M")

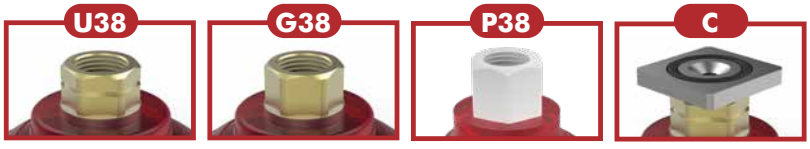

3/8 NPT | G3/8 | Nylon G3/8 | 1.25 in. Square

Dimensions and technical information are subject to change without notice

Specifications:

Temperature:
15-59 Sec: -20° to 250° F [-29° to 121° C]
1-5 min: 15° to 180° F [-9° to 82° C]
Material: Nitrile
Chemical Resistance:
Oil, water, grease, hydraulic fluid, alcohol

DC Destacker Stress Relieving





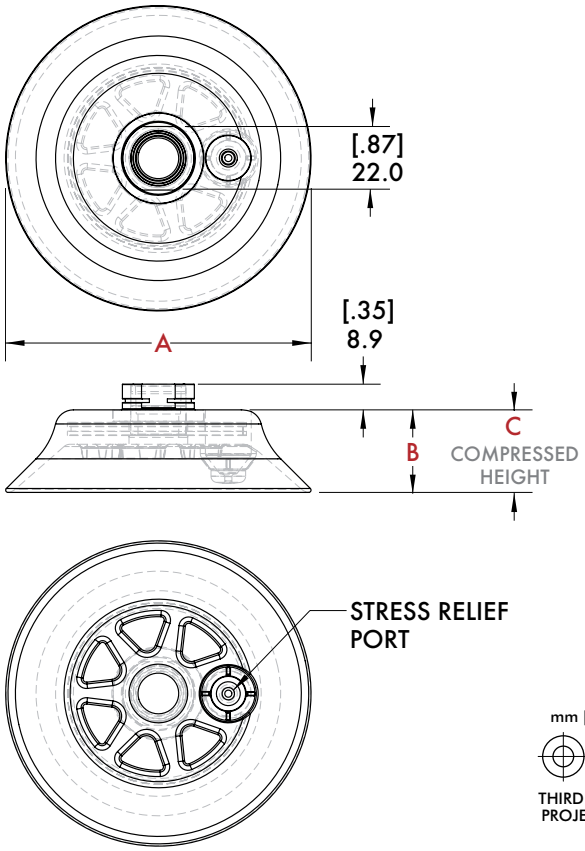

mm [INCH]
THIRD ANGLE
PROJECTION

ACU INDEX

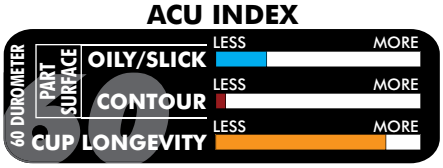

US Patents #7,309,089
7,712,807

DC Dimensions

Model	A	B	C	Weight
75DC	84.8	25.4	16.7	84 g
[30DC]	[3.34]	[1.00]	[.68]	[3.0 oz]
100DC	105.9	28.6	16.7	120 g
[40DC]	[4.16]	[1.11]	[.68]	[4.2 oz]

Dimensions shown "mm [inch]"

DC Capacity

Appl.	Ver. Lift
75DC	15.9 kg
[30DC]	[35 lb]
100DC	63.1 kg
[40DC]	[139 lb]

Holding capacities shown "N [lbf]"

DC Destacker Stress Relieving Ordering Information

Imperial
Ø3.00"..... CPI-**30DC**-(**M**)-**60**
Ø4.00"..... CPI-**40DC**-(**M**)-**60**

(**DR**) = Durometer
~~60~~
(**M**) = Mounts Available
K **B** **C** **D** **E1**

Metric
Ø75 mm..... CPI-**75DC**-(**M**)-**60**
Ø100 mm..... CPI-**100DC**-(**M**)-**60**

(**DR**) = Durometer
~~60~~
(**M**) = Mounts Available
A **B** **C**

VACUUM CUPS

Vacuum Products | Dimensions | Ordering Information

TC/HT Round Traction



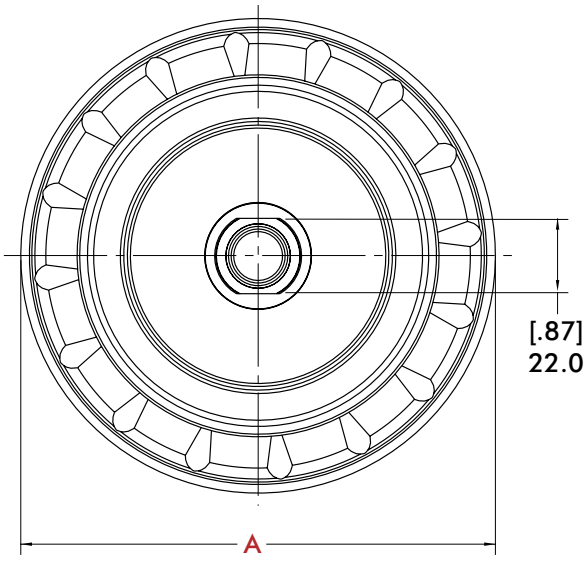

Specifications:

Temperature:

15-59 Sec: -29° to 121° C [-20° to 250° F]

1-5 min: -9° to 82° C [15° to 180° F]

Material: Nitrile

Chemical Resistance:

Oil, water, grease, hydraulic fluid, alcohol

ACU INDEX

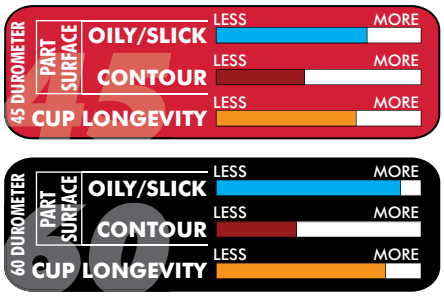

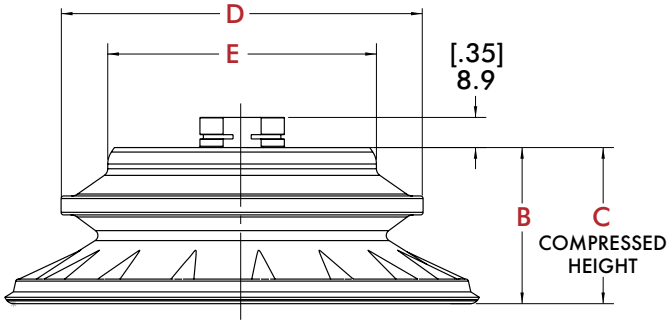

TC/HT Dimensions

Model	A	B	C	D	E	Weight
[**20**TC]	[2.06]	[1.02]	[.68]	[1.64]	[1.25]	[1.3 oz]
50HT	52.3	25.7	17.3	41.7	31.8	37 g
[**35**TC]	[3.50]	[1.71]	[.82]	[2.50]	[1.65]	[2.6 oz]
90HT	88.9	43.44	20.8	63.5	41.9	73 g
[**45**TC]	[4.50]	[1.81]	[.87]	[3.25]	[2.25]	[4.4 oz]
115HT	114.3	46.1	22.1	82.4	57.2	125 g
[**55**TC]	[5.50]	[1.81]	[.87]	[4.00]	[3.04]	[7.2 oz]
140HT	139.7	46.1	22.1	101.4	77.1	204 g

Dimensions shown "mm [inch]"

TC/HT Holding Capacity

Appl.	Hor. Dry	Hor. Wet	Ver. Lift
[20TC]	[8.5 lb]	[7 lb]	[22.7 lb]
50HT	3.9 kg	3.2 kg	10.3 kg
[35TC]	[30 lb]	[20 lb]	[66 lb]
90HT	13.6 kg	9.1 kg	29.9 kg
[45TC]	[45 lb]	[30 lb]	[103 lb]
115HT	20.4 kg	13.6 kg	46.7 kg
[55TC]	[100 lb]	[45 lb]	[164 lb]
140HT	45.5 kg	20.4 kg	74.4 kg

Holding capacities shown "N [lbf]"

TC/HT Round Traction Ordering Information

Imperial

Ø2.00" ..... CPI-**20TC**-(M)-(DR)
Ø3.50" ..... CPI-**35TC**-(M)-(DR)
Ø4.50" ..... CPI-**45TC**-(M)-(DR)
Ø5.50" ..... CPI-**55TC**-(M)-(DR)

(M) = Mounts Available

K B C D ~~70TC~~ E1 ~~70TC~~

(DR) = Durometer

~~X~~ 45 60

Metric

Ø50mm ..... CPI-**50HT**-(M)-(DR)
Ø90mm ..... CPI-**90HT**-(M)-(DR)
Ø115mm ..... CPI-**115HT**-(M)-(DR)
Ø140mm ..... CPI-**140HT**-(M)-(DR)

(M) = Mounts Available

A B C

(DR) = Durometer

~~X~~ 45 60

Dimensions and technical information are subject to change without notice

FF/PF Round Flatfoot

Specifications:

Temperature:
15-59 Sec: -20° to 250° F [-29° to 121° C]
1-5 min: 15° to 180° F [-9° to 82° C]

Material: Nitrile

Chemical Resistance:
Oil, water, grease, hydraulic fluid, alcohol



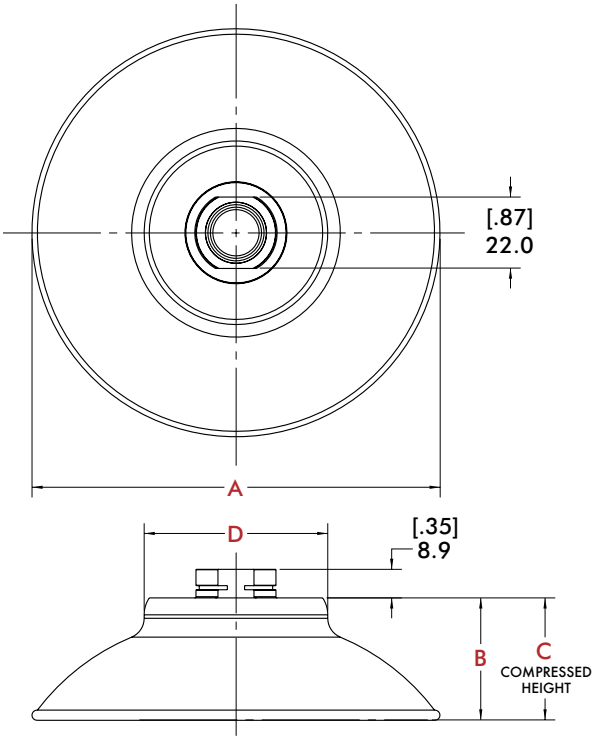

ACU INDEX

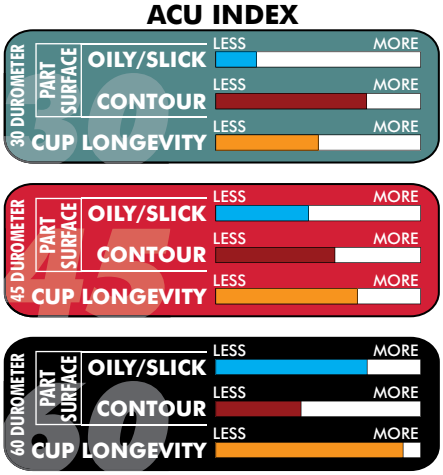

FF/PF Round Flatfoot

Model	A	B	C	D	Weight
50PF	50.8	22.5	13.0	19.1	40 g
[20FF]	[2.00]	[.89]	[.51]	[.75]	[1.4 oz]
75PF	76.2	25.4	18.2	39.6	57 g
[30FF]	[3.00]	[1.00]	[.72]	[1.56]	[2.0 oz]
100PF	101.6	33.3	22.2	39.6	96 g
[40FF]	[4.00]	[1.31]	[.88]	[1.56]	[3.4 oz]
125PF	127.0	38.2	25.4	57.2	159 g
[50FF]	[5.00]	[1.50]	[1.00]	[2.25]	[5.6 oz]

Dimensions shown "mm [inch]"

FF/PF Vacuum Cup Capacities:

Appl.	Hor. Dry	Hor. Wet	Ver. Lift
50PF	6.4 kg	2.7 kg	9.1 kg
[20FF]	[14 lb]	[6 lb]	[20 lb]
75PF	13.6 kg	5.9 kg	27.2 kg
[30FF]	[30 lb]	[13 lb]	[60 lb]
100PF	15.9 kg	9.1 kg	46.3 kg
[40FF]	[35 lb]	[20 lb]	[102 lb]
125PF	31.8 kg	25.8 kg	74.8 kg
[50FF]	[70 lb]	[55 lb]	[165 lb]

Holding capacities shown "N [lbf]"

FF/PF Round Flatfoot Vacuum Cups Ordering Information

Imperial

Ø2.00" ..... CPI-**20FF**-(M)-(DR)
Ø3.00" ..... CPI-**30FF**-(M)-(DR)
Ø4.00" ..... CPI-**40FF**-(M)-(DR)
Ø5.00" ..... CPI-**50FF**-(M)-(DR)

(DR) = Durometer
30 45 60

(M) = Mounts Available
K B C D 40FF 50FF E1

Metric

Ø50mm ..... CPI-**50PF**-(M)-(DR)
Ø75mm ..... CPI-**75PF**-(M)-(DR)
Ø100mm ..... CPI-**100PF**-(M)-(DR)
Ø125mm ..... CPI-**125PF**-(M)-(DR)

(DR) = Durometer
30 45 60

(M) = Mounts Available
A B C

VACUUM CUPS

Vacuum Products | Dimensions | Ordering Information

AC/BT Round Belcup



Specifications:

Temperature:

15-59 Sec: -20° to 250° F [-29° to 121° C]

1-5 min: 15° to 180° F [-9° to 82° C]

Material: Nitrile

Chemical Resistance:

Oil, water, grease, hydraulic fluid, alcohol

ACU INDEX

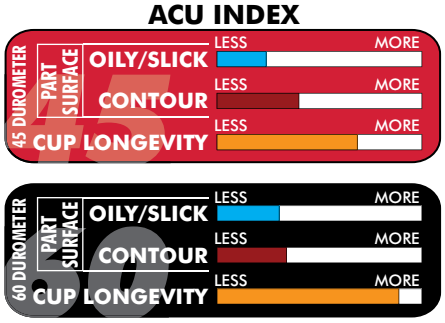

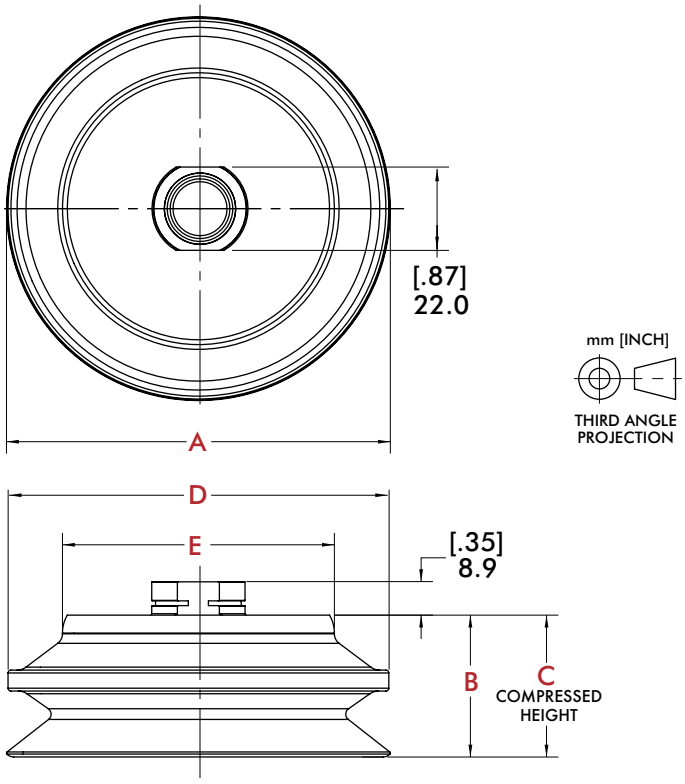

AC/BT Round Belcup

Model	A	B	C	D	E	Weight
40BT [15AC]	41.1 [1.62]	25.9 [1.02]	11.9 [.47]	41.1 [1.63]	31.8 [1.25]	35 g [1.2 oz]
50BT [20AC]	57.4 [2.26]	37.4 [1.47]	18.3 [.72]	57.9 [2.28]	38.1 [1.50]	57 g [2.0 oz]
75BT [30AC]	78.9 [3.11]	38.8 [1.53]	19.8 [.78]	80.0 [3.15]	56.6 [2.23]	91 g [3.2 oz]
100BT [40AC]	102.4 [4.03]	37.8 [1.49]	18.6 [.73]	101.6 [4.00]	72.6 [2.85]	159 g [5.6 oz]
125BT [50AC]	127.0 [5.00]	38.1 [1.50]	19.0 [.75]	127.0 [5.00]	97.8 [3.85]	232 g [8.2 oz]

Dimensions shown "mm [inch]"

AC/BT Vacuum Cup Capacities:

Appl.	Hor. Dry	Hor. Wet	Ver. Lift
40BT [15AC]	2.7 kg [6 lb]	1.4 kg [3 lb]	3.6 kg [8 lb]
50BT [20AC]	3.9 kg [8.5 lb]	2.0 kg [4.5 lb]	11.8 kg [26 lb]
75BT [30AC]	5.4 kg [12 lb]	2.7 kg [6 lb]	25.4 kg [56 lb]
100BT [40AC]	15.0 kg [33 lb]	3.6 kg [8 lb]	40.4 kg [89 lb]
125BT [50AC]	24.0 kg [53 lb]	6.8 kg [15 lb]	62.6 kg [138 lb]

Holding capacities shown "N [lbf]"

AC/BT Round Belcup Vacuum Cups Ordering Information

Imperial

Ø1.50" ..... CPI-**15AC**-(**M**)-(**DR**)
Ø2.00" ..... CPI-**20AC**-(**M**)-(**DR**)
Ø3.00" ..... CPI-**30AC**-(**M**)-(**DR**)
Ø4.00" ..... CPI-**40AC**-(**M**)-(**DR**)
Ø5.00" ..... CPI-**50AC**-(**M**)-(**DR**)

(**DR**) = Durometer

~~45~~ 60

(**M**) = Mounts Available

K B C D ~~15AC~~ ~~20AC~~ M8F E1 ~~15AC~~ 20AC

Metric

Ø40mm..... CPI-**40BT**-(**M**)-(**DR**)
Ø50mm..... CPI-**50BT**-(**M**)-(**DR**)
Ø75mm..... CPI-**75BT**-(**M**)-(**DR**)
Ø100mm..... CPI-**100BT**-(**M**)-(**DR**)
Ø125mm..... CPI-**125BT**-(**M**)-(**DR**)

(**DR**) = Durometer

~~45~~ 60

(**M**) = Mounts Available

A B C M10

Dimensions and technical information are subject to change without notice

DD/DM Round Deepdish

Specifications:
Temperature:
15-59 Sec: -20° to 250° F [-29° to 121° C]
1-5 min: 15° to 180° F [-9° to 82° C]
Material: Nitrile
Chemical Resistance:
Oil, water, grease, hydraulic fluid, alcohol



mm [INCH]
THIRD ANGLE PROJECTION

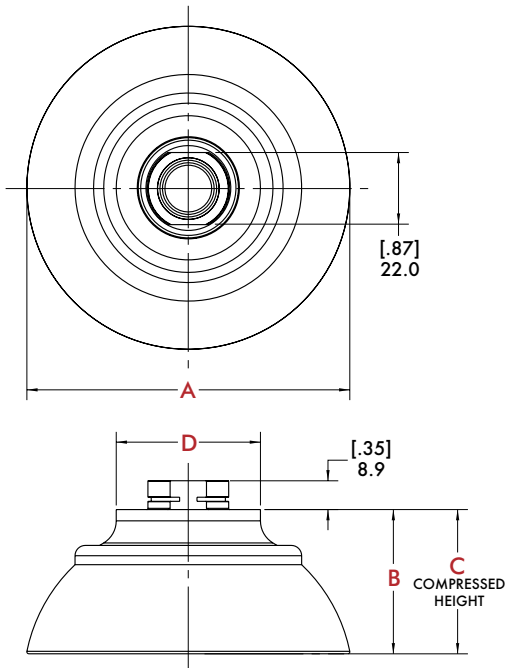

ACU INDEX

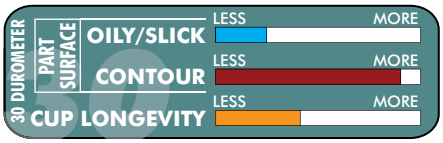

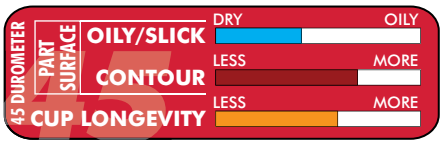

DD/DM Round Deepdish

Model	A	B	C	D	Weight
50DM	50.8	29.1	18.3	38.1	40 g
[20DD]	[2.00]	[1.14]	[.72]	[1.50]	[1.4 oz]
75DM	76.2	40.4	24.3	44.0	57 g
[30DD]	[3.00]	[1.59]	[.96]	[1.73]	[2.0 oz]
100DM	101.6	44.5	20.8	44.5	96 g
[40DD]	[4.00]	[1.75]	[.82]	[1.75]	[3.4 oz]

Dimensions shown "mm [inch]"

DD/DM Vacuum Cup Capacities:

Appl.	Hor. Dry	Hor. Wet	Ver. Lift
50DM	4.1 kg	3.2 kg	5.4 kg
[20DD]	[9 lb]	[7 lb]	[12 lb]
75DM	6.4 kg	2.7 kg	9.1 kg
[30DD]	[14 lb]	[6 lb]	[20 lb]
100DM	11.3 kg	3.2 kg	15.8 kg
[40DD]	[25 lb]	[7lb]	[35 lb]

Holding capacities shown "N [lbf]"

DD/DM Round Deepdish Vacuum Cups Ordering Information

Imperial
Ø2.00" ..... CPI-**20DD**-(M)-(DR)
Ø3.00" ..... CPI-**30DD**-(M)-(DR)
Ø4.00" ..... CPI-**40DD**-(M)-(DR)

(DR) = Durometer
30 45 ~~60~~
(M) = Mounts Available
K B C

Metric
Ø50mm ..... CPI-**50DM**-(M)-(DR)
Ø75mm ..... CPI-**75DM**-(M)-(DR)
Ø100mm ..... CPI-**100DM**-(M)-(DR)

(DR) = Durometer
30 45 ~~60~~
(M) = Mounts Available
A B C

VACUUM CUPS

Vacuum Products | Dimensions | Ordering Information

FF/PF Oval FlatFoot



Specifications:
Temperature:
15-59 Sec: -20° to 250° F [-29° to 121° C]
1-5 min: 15° to 180° F [-9° to 82° C]
Material: Nitrile
Chemical Resistance:
Oil, water, grease, hydraulic fluid, alcohol

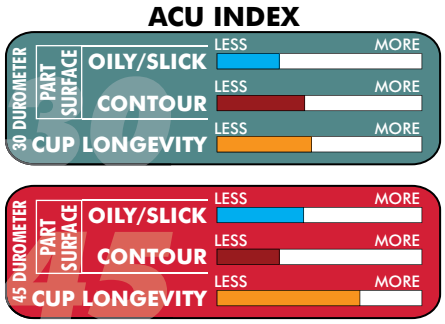

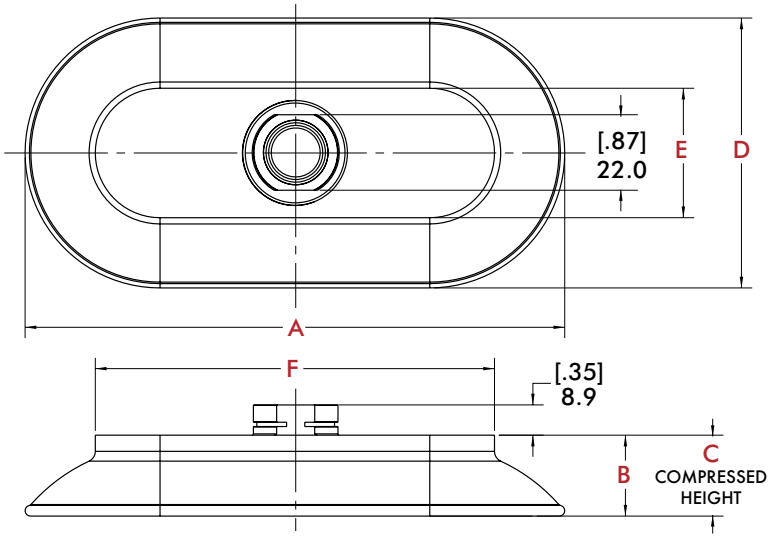

FF/PF Oval Flatfoot

Model	A	B	C	D	E	F	Weight
40-75PF [153FF]	76.2 [3.00]	22.3 [.88]	16.2 [.64]	38.1 [1.50]	22.2 [.88]	60.3 [2.37]	35 g [1.2 oz]
50-100PF [24FF]	101.6 [4.00]	23.8 [.94]	16.2 [.64]	50.8 [2.00]	22.2 [.88]	73.0 [2.88]	119 g [4.2 oz]
60-125PF [255FF]	127.0 [5.00]	22.3 [.88]	16.2 [.64]	63.5 [2.50]	22.2 [.88]	85.7 [3.38]	147 g [5.2 oz]
75-150PF [36FF]	152.9 [6.00]	25.4 [1.00]	18.3 [.72]	76.2 [3.00]	38.1 [1.50]	114.3 [4.50]	201 g [7.1 oz]

Dimensions shown "mm [inch]"

FF/PF Vacuum Cup Capacities:

Appl.	Hor. Dry	Hor. Wet	Ver. Lift
40-75PF [153FF]	6.8 kg [15 lb]	2.3 kg [5 lb]	8.2 kg [18 lb]
50-100PF [24FF]	8.2 kg [18 lb]	2.7 kg [6 lb]	19.1 kg [42 lb]
60-125PF [255FF]	20.4 [45 lb]	3.2 kg [7 lb]	25 kg [55 lb]
75-150PF [36FF]	24.9 [55 lb]	4.1 kg [9 lb]	32.7 kg [72 lb]

Holding capacities shown "N [lbf]"

FF/PF Oval FlatFoot Vacuum Cups Ordering Information

Imperial

1.50" x 3.00" ..... CPI-**153FF**-(**M**)-(**DR**)
2.00" x 4.00" ..... CPI-**24FF**-(**M**)-(**DR**)
2.50" x 5.00" ..... CPI-**255FF**-(**M**)-(**DR**)
3.00" x 6.00" ..... CPI-**36FF**-(**M**)-(**DR**)

(**DR**) = Durometer
30 45 ~~63~~

(**M**) = Mounts Available
K B C D-24FF E1-24FF

Metric

40 x 75mm ..... **CPI-40-75PF**-(**M**)-(**DR**)
50 x 100mm ..... **CPI-50-100PF**-(**M**)-(**DR**)
60 x 125mm ..... **CPI-60-125PF**-(**M**)-(**DR**)
75 x 150mm ..... **CPI-75-150PF**-(**M**)-(**DR**)

(**DR**) = Durometer
30 45 ~~63~~

(**M**) = Mounts Available
A B C ~~63-125PF~~

Dimensions and technical information are subject to change without notice

DD/DM Oval Deepdish

Specifications:
Temperature:
15-59 Sec: -20° to 250° F [-29° to 121° C]
1-5 min: 15° to 180° F [-9° to 82° C]
Material: Nitrile
Chemical Resistance:
Oil, water, grease, hydraulic fluid, alcohol



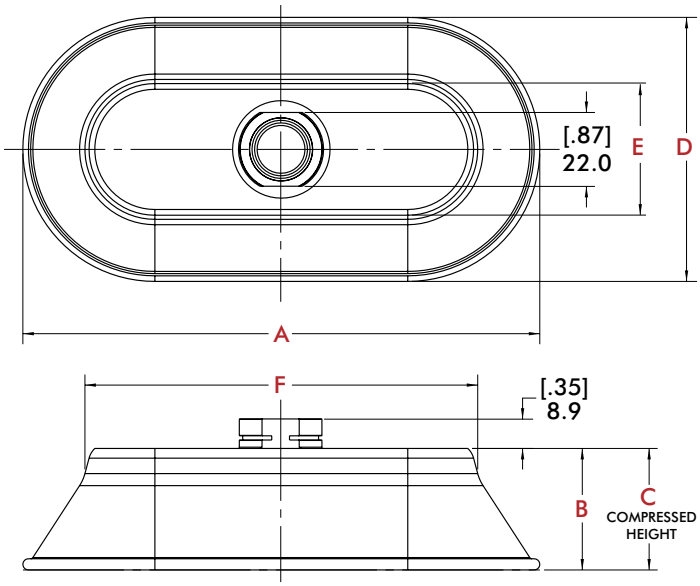

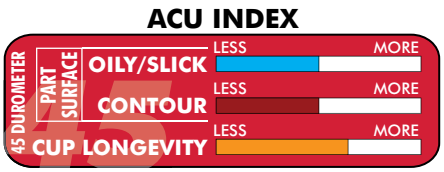

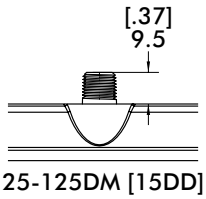

25-125DM [15DD]

DD/DM Oval Deepdish

Model	A	B	C	D	E	F	Weight
25-125DM [15DD]	128.7 [5.06]	17.1 [.67]	8.7 [.34]	27.0 [1.06]	12.9 [.51]	114.5 [4.51]	35 g [1.2 oz]
75-150DM [36DD]	155.8 [6.13]	36.7 [1.44]	16.51 [.65]	79.6 [3.13]	39.7 [1.56]	118.4 [4.65]	201 g [7.1 oz]

Dimensions shown "mm [inch]"

DD/DM Vacuum Cup Capacities:

Appl.	Hor. Dry	Hor. Wet	Ver. Lift
25-125DM [15DD]	10.0 kg [22 lb]	3.2 kg [7 lb]	15.9 kg [35 lb]
75-150DM [36DD]	24.9 kg [55 lb]	10.4 kg [23 lb]	63.1 kg [139 lb]

Holding capacities shown "N [lbf]"

DD/DM Oval Deepdish Vacuum Cups Ordering Information

Imperial
1.00" x 5.00" ..... CPI-**15DD**-(**M**)-(**45**)
3.00" x 6.00" ..... CPI-**36DD**-(**M**)-(**45**)

Metric
25 x 125mm ..... CPI-**25-125DM**-(**M**)-(**45**)
75 x 150mm ..... CPI-**75-150DM**-(**M**)-(**45**)

(**DR**) = Durometer
~~60~~ **45** ~~60~~

(**M**) = Mounts Available
K ~~15DD~~ **B** **C** **U18** ~~36DD~~

(**DR**) = Durometer
~~60~~ **45** ~~60~~

(**M**) = Mounts Available
A ~~25-125DM~~ **B** **C** **U18** ~~75-150DM~~

HOT FORMING VACUUM CUPS

Vacuum Products | Dimensions | Ordering Information

MFF Round Flat



Specifications:
Temperature:
Resistant up to 250° C [482° F]
(sheet metal temperature)
Material: Silicone free HT2
Chemical Resistance:
Oil, water, grease, hydraulic fluid, alcohol

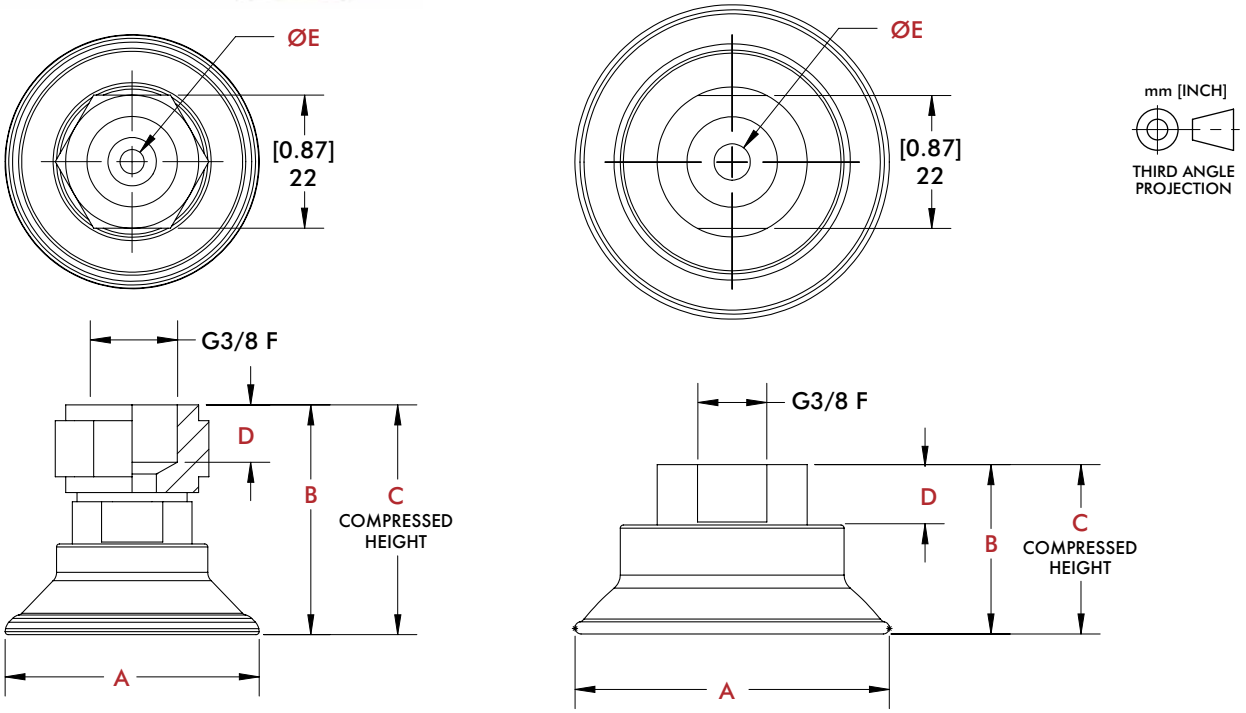

MFF Dimensions

Model	A	B	C	D	E	Weight
30MFF	[1.34] 34	[1.42] 36	[1.30] 33	[0.35] 9	[0.16] 4	[1.64 oz] 46.5 g
40MFF	[1.81] 46	[1.50] 38	[1.34] 34	[0.35] 9	[0.16] 4	[1.77 oz] 50.1 g
50MFF	[2.20] 56	[1.10] 28	[0.91] 23	[0.59] 15	[0.24] 6	[1.35 oz] 38.2 g
60MFF	[2.64] 67	[1.22] 31	[0.98] 25	[0.59] 15	[0.24] 6	[0.95 oz] 27 g

Dimensions shown "mm [inch]"

MFF Holding Capacity @ -0.6 bar vacuum

Appl.	Vert. Lift	Horz. Dry	Horz. Wet
30MFF	[8.5] 38	[6.7] 30	[6.3] 28
40MFF	[15.5] 69	[11.7] 52	[11.2] 50
50MFF	[22.5] 100	[18.0] 80	[17.1] 76
60MFF	[33.7] 150	[23.6] 105	[19.1] 85

Holding capacities shown "N [lbf]"

MFF Round Flat Ordering Information

Metric

Ø30mm CPI-**30MFF**-B-HT
Ø40mm CPI-**40MFF**-B-HT
Ø50mm CPI-**50MFF**-B-HT
Ø60mm CPI-**60MFF**-B-HT

Dimensions and technical information are subject to change without notice

HOT FORMING VACUUM CUPS

Specifications:
Temperature:
Resistant up to 250° C [482° F]
(sheet metal temperature)
Material: Silicone free HT2
Chemical Resistance:
Oil, water, grease, hydraulic fluid, alcohol

MTC Round Bellows



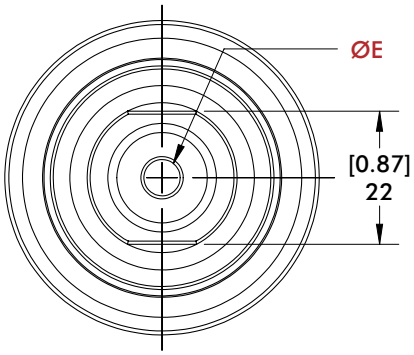

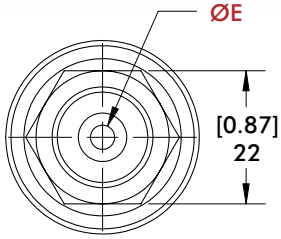

mm [INCH]
THIRD ANGLE PROJECTION

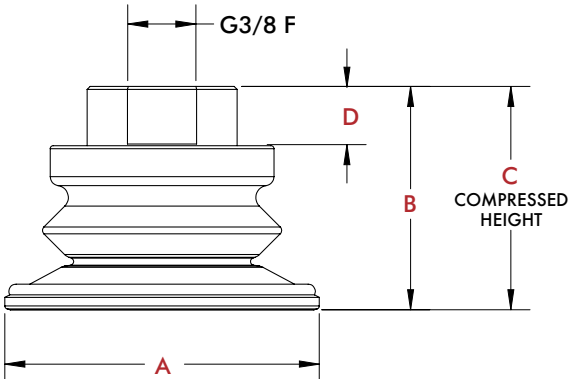

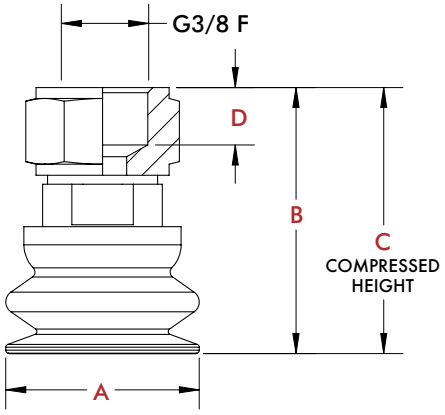

MTC Dimensions

Model	A	B	C	D	E	Weight
22MTC	[0.87] 22	[1.61] 41	[1.39] 35.2	[0.35] 9.5	[0.14] 3.5	[1.54 oz] 43.6 g
30MTC	[1.34] 34	[1.73] 44	[1.38] 35	[0.35] 9	[0.16] 4	[1.74 oz] 49.3 g
40MTC	[1.77] 45	[1.73] 44	[1.34] 34	[0.35] 9	[0.16] 4	[1.79 oz] 50.8 g
50MTC	[2.20] 56	[1.46] 37	[1.00] 25.5	[0.59] 15	[0.24] 6	[1.40 oz] 39.6 g
60MTC	[2.64] 67	[1.63] 41.5	[1.06] 27	[0.59] 15	[0.24] 6	[1.83 oz] 51.8 g

Dimensions shown "mm [inch]"

MTC Holding Capacity @ -0.6 bar vacuum

Appl.	Vert. Lift	Horz. Dry	Horz. Wet
22MTC	[3.6] 16	[4.0] 18	[1.3] 6
30MTC	[4.9] 22	[6.7] 30	[2.9] 13
40MTC	[8.5] 38	[8.1] 36	[7.4] 33
50MTC	[11.9] 53	[12.4] 55	[11.7] 52
60MTC	[18.4] 82	[18.4] 82	[17.3] 77

Holding capacities shown "N [lbf]"

MTC Round Bellows Ordering Information

Metric

Ø22mm CPI-**22MTC**-B-HT
Ø30mm CPI-**30MTC**-B-HT
Ø40mm CPI-**40MTC**-B-HT
Ø50mm CPI-**50MTC**-B-HT
Ø60mm CPI-**60MTC**-B-HT

HOT FORMING VACUUM CUPS

Vacuum Products | Dimensions | Ordering Information

MFF Oval Flat



Specifications:
Temperature:
Resistant up to 250° C [482° F]
(sheet metal temperature)
Material: Silicone free HT2
Chemical Resistance:
Oil, water, grease, hydraulic fluid, alcohol

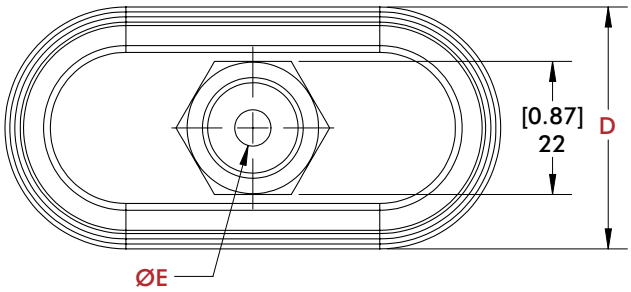

mm [INCH]
THIRD ANGLE PROJECTION

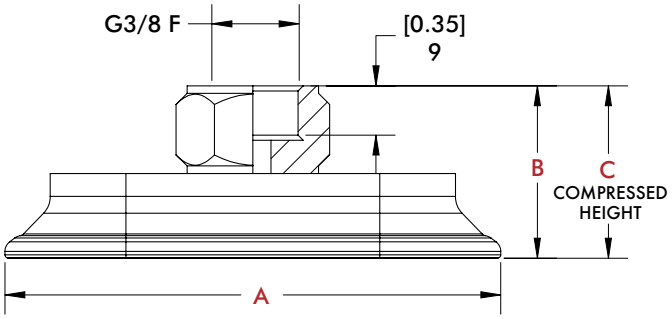

MFF Dimensions

Model	A	B	C	D	E	Weight
6023MFF	[2.52] 64	[1.02] 26	[0.91] 23	[0.98] 25	[0.24] 6	[1.57 oz] 44.6 g
9030MFF	[3.70] 94	[1.06] 27	[0.94] 24	[1.34] 34	[0.24] 6	[2.42 oz] 68.5 g
8040MFF	[3.35] 85	[1.10] 28	[0.94] 24	[1.69] 43	[0.24] 6	[2.30 oz] 65.1 g
10050MFF	[4.17] 106	[1.22] 31	[1.02] 26	[2.13] 54	[0.31] 8	[3.68 oz] 104.2 g

Dimensions shown "mm [inch]"

MFF Holding Capacity @ -0.6 bar vacuum

Appl.	Vert. Lift	Horz. Dry	Horz. Wet
6023MFF	[12.8] 57	[8.3] 37	[7.4] 33
9030MFF	[27.4] 122	[21.6] 96	[14.4] 64
8040MFF	[31.5] 140	[24.7] 110	[22.5] 100
10050MFF	[48.8] 217	[40.7] 181	[27.2] 121

Holding capacities shown "N [lbf]"

MFF Oval Flat Ordering Information

Metric

Ø60x23mm CPI-**6023MFF**-B-HT
Ø90x30mm CPI-**9030MFF**-B-HT
Ø80x40mm CPI-**8040MFF**-B-HT
Ø100x50mm CPI-**10050MFF**-B-HT

HOT FORMING VACUUM CUPS

Vacuum Products | Dimensions | Ordering Information

MAC Oval Bellows

Specifications:
Temperature:
Resistant up to 250° C [482° F]
(sheet metal temperature)
Material: Silicone free HT2
Chemical Resistance:
Oil, water, grease, hydraulic fluid, alcohol



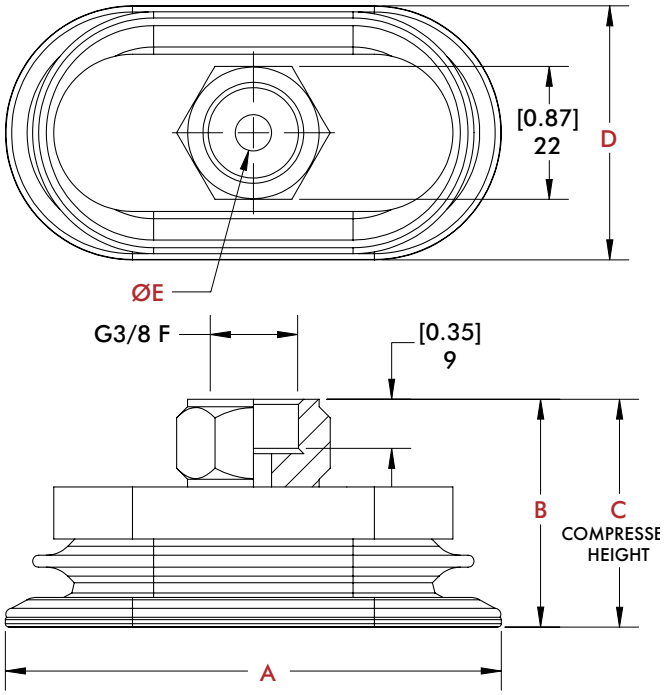

mm [INCH]
THIRD ANGLE
PROJECTION

MAC Dimensions

Model	A	B	C	D	E	Weight
6030MAC	[2.48] 63	[1.38] 35	[1.10] 28	[1.30] 33	[0.24] 6	[2.32 oz] 65.9 g
8040MAC	[3.27] 83	[1.48] 37.7	[1.13] 28.7	[1.69] 43	[0.24] 6	[2.78 oz] 78.7 g

Dimensions shown "mm [inch]"

MAC Holding Capacity @ -0.6 bar vacuum

Model	Vert. Lift	Horz. Dry	Horz. Wet
6030MAC	[8.5] 38	[12.8] 57	[11.7] 52
8040MAC	[14.6] 65	[22.5] 100	[21.3] 95

Holding capacities shown "N [lbf]"

MAC Oval Bellows Ordering Information

Metric
Ø60x30mm CPI-**6030MAC**-B-HT
Ø80x40mm CPI-**8040MAC**-B-HT

MICRO SERIES VACUUM CUPS

Vacuum Products | Dimensions | Ordering Information

VC-F Round Flat



Applications:
- Relatively flat surfaces.
- Dry to moderate oily/slippery surfaces.
- Low Compression distances.
- Higher precision applications.

Specifications:
Material Operating Temperature:
Viton: -40° to 450° F
[-40° to 232° C]
Silicone: -100° to 400° F
[-73° to 204.4° C]
Nitrile: -40° to 275° F
[-40° to 135° C]
Durometer: A50

ACU INDEX

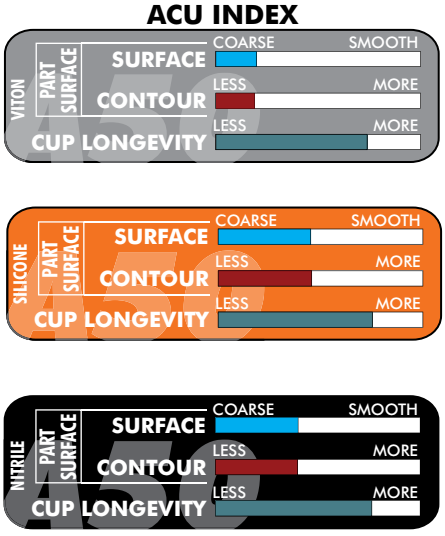

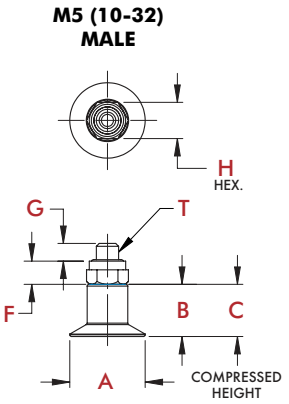

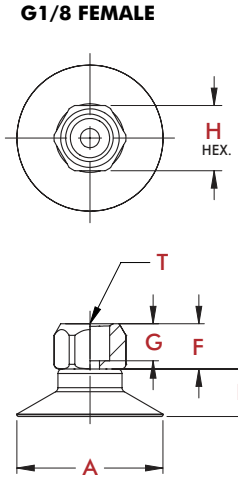

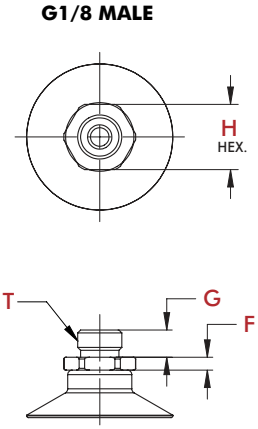

(**DR**) = Durometer/Material

- **V** — **Viton** Hi-Temp Applications where silicon is not allowed
- **S** — **Silicon** Extremely hot or cold environments
- **N** — **Nitrile** General Purpose

mm [INCH]
THIRD ANGLE PROJECTION

VC-F Micro Fitting Threads

Thread (T)	(F)	(G)	(H)
10M (M5) (10-32 MALE)	5.1 [.20]	4.1 [.16]	7.9 [.31]
18M (G1/8) (MALE)	2.8 [.11]	5.8 [.23]	14.2 [.56]
18F (G1/8) (FEMALE)	9.9 [.39]	6.4 [.25]	14.2 [.56]

VC-F Dimensions

Model	A	B	C	CUP WT	LOAD
VC-**F15**	16.5 [.65]	11.4 [.45]	10.4 [.41]	3.4 g [.11 oz]	.85 kg [1.88 lb]
VC-**F20**	22.1 [.87]	8.6 [.34]	7.1 [.28]	7.8 g [.25 oz]	1.47 kg [3.25 lb]
VC-**F30**	32.0 [1.26]	10.4 [.41]	8.1 [.32]	6.2 g [.20 oz]	2.55 kg [5.63 lb]
VC-**F40**	42.2 [1.66]	14.0 [.55]	11.4 [.45]	11.8 g [.38 oz]	4.08 kg [9.00 lb]
VC-**F50**	53.1 [2.08]	17.5 [.69]	14.5 [.57]	19.6 g [.63 oz]	7.54 kg [16.6 lb]

VC-F Round Flag Ordering Information

Ø15mm..... VC-**F15**(DR)-(M)
Ø20mm..... VC-**F20**(DR)-(M)
Ø30mm..... VC-**F30**(DR)-(M)
Ø40mm..... VC-**F40**(DR)-(M)
Ø50mm..... VC-**F50**(DR)-(M)

(**DR**) = Durometer/Material
V **S** **N**
Not Available in Ø15 and Ø20mm

(**M**) = Mounts Available
10M **18M** **18F**
Only Available in Ø15 and Ø20mm

Dimensions and technical information are subject to change without notice

MICRO SERIES VACUUM CUPS

Vacuum Products | Dimensions | Ordering Information

VC-B Micro Series Round Bellows

Applications:
- Moderately flat surfaces.
- Best performance on dry surfaces.
- Moderate compression distance.
- Bellows allows for minor misalignments.

Specifications:
Material Operating Temperature:
Viton: -40° to 450° F
[-40° to 232° C]
Silicone: -100° to 400° F
[-73° to 204.4° C]
Nitrile: -40° to 275° F
[-40° to 135° C]
Durometer: A50



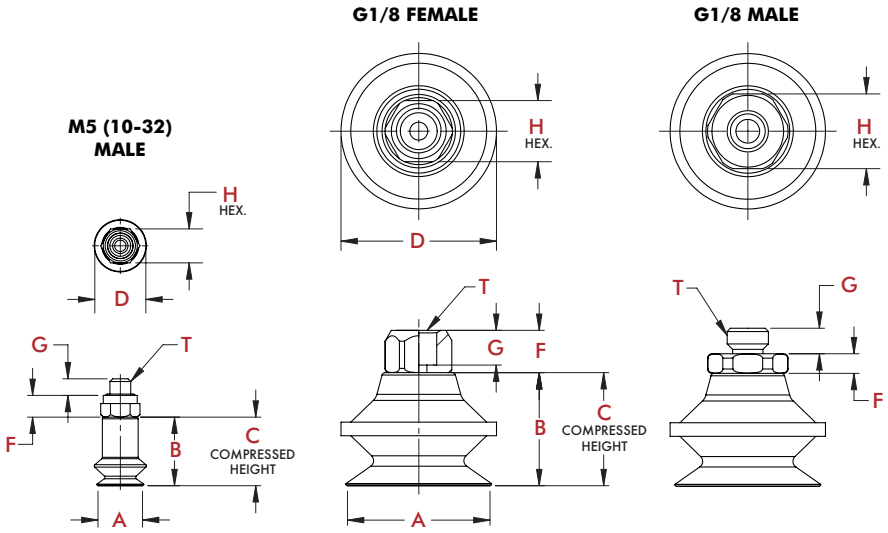

ACU INDEX

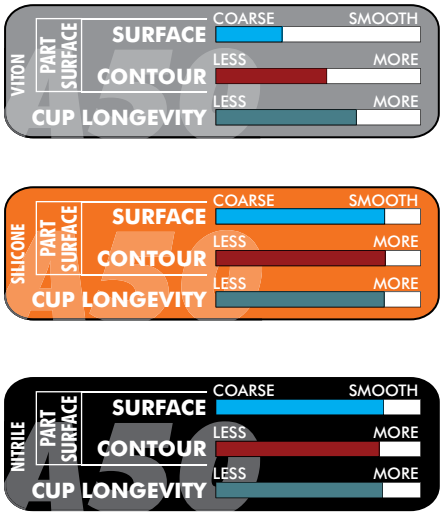

VC-B Micro Fitting Threads

Thread (T)	(F)	(G)	(H)
10M (M5) (10-32 MALE)	5.1 [.20]	4.1 [.16]	7.9 [.31]
18M (G1/8) (MALE)	2.8 [.11]	5.8 [.23]	14.2 [.56]
18F (G1/8) (FEMALE)	9.9 [.39]	6.4 [.25]	14.2 [.56]

(DR) = Durometer/Material

- **V** — **Viton** Hi-Temp Applications where silicon is not allowed
- **S** — **Silicon** Extremely hot or cold environments
- **N** — **Nitrile** General Purpose

VC-B Dimensions

Model	A	B	C	D	Cup Wt	Load
VC-**B05**	5.6 [.22]	9.1 [.36]	7.6 [.30]	6.1 [.24]	5.8 g [.09 oz]	.04 kg [.10 lb]
VC-**B10**	10.9 [.43]	16.0 [.63]	11.4 [.45]	12.2 [.48]	3.4 g [.11 oz]	.39 kg [.87 lb]
VC-**B15**	16.0 [.63]	19.8 [.78]	13.2 [.52]	17.5 [.69]	3.7 g [.12 oz]	.57 kg [1.25 lb]
VC-**B20**	22.4 [.88]	17.5 [.69]	7.6 [.30]	23.9 [.94]	6.2 g [.20 oz]	1.02 kg [2.25 lb]
VC-**B30**	34.0 [1.34]	26.4 [1.04]	11.4 [.45]	36.3 [1.43]	11.5 g [.37 oz]	.2.21 kg [4.88 lb]
VC-**B40**	42.9 [1.69]	27.4 [1.08]	12.4 [.49]	46.2 [1.82]	18.7 g [.60 oz]	3.97 kg [8.75 lb]
VC-**B50**	52.8 [2.08]	34.5 [1.36]	14.5 [.57]	59.4 [2.34]	30.5 g [.98 oz]	6.63 kg [14.6 lb]

VC-B Micro Series Round Multi-Bellows Ordering Information

Ø05mm..... VC-**B05**(DR)-(M)
Ø10mm..... VC-**B10**(DR)-(M)
Ø15mm..... VC-**B15**(DR)-(M)
Ø20mm..... VC-**B20**(DR)-(M)
Ø30mm..... VC-**B30**(DR)-(M)
Ø40mm..... VC-**B40**(DR)-(M)
Ø50mm..... VC-**B50**(DR)-(M)

(DR) = Durometer/Material
V S N

(M) = Mounts Available
10M 18M 18F
Only Available in Ø5, Ø10, Ø15, Ø20mm

MICRO SERIES VACUUM CUPS

Vacuum Products | Dimensions | Ordering Information

VC-BM Micro Series Round Multi-Bellows



Applications:

- Angled/curved/bumpy surfaces.
- Best performance on dry surfaces.
- Higher compression distance. (Reach in Box)
- Bellows allow for minor
- Provides Partial extraction.

Specifications:

Material Operating Temperature:
Viton: -40° to 450° F
[-40° to 232° C]
Silicone: -100° to 400° F
[-73° to 204.4° C]
Nitrile: -40° to 275° F
[-40° to 135° C]
Durometer: A50

ACU INDEX

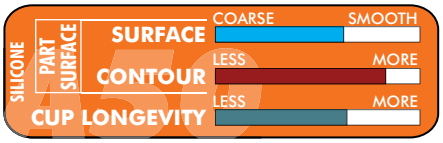

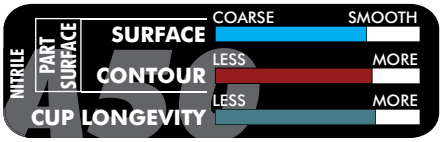

(DR) = Durometer/Material

S **Silicon** Extremely hot or cold environments

N **Nitrile** General Purpose

G1/8 FEMALE

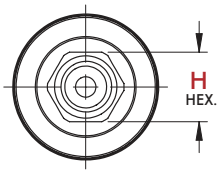

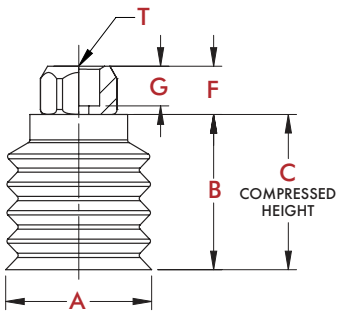

G1/8 MALE

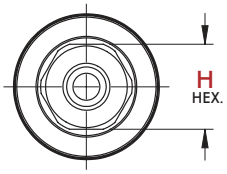

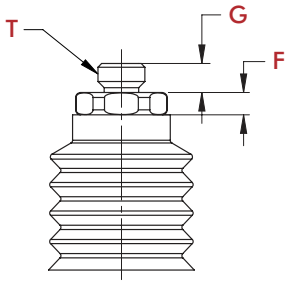

VC-BM Micro Fitting Threads

Thread (T)	(F)	(G)	(H)
10M (M5) (10-32 MALE)	5.1 [.20]	4.1 [.16]	7.9 [.31]
18M (G1/8) (MALE)	2.8 [.11]	5.8 [.23]	14.2 [.56]
18F (G1/8) (FEMALE)	9.9 [.39]	6.4 [.25]	14.2 [.56]

VC-BM Dimensions

Model	A	B	C	Cup Wt	Load
VC-BM**20**	20.1 [.79]	21.9 [.86]	8.9 [.35]	5.3 g [17 oz]	.68 kg [1.50 lb]
VC-BM**30**	30.0 [1.18]	30.7 [1.21]	10.7 [.42]	10.3 g [.33 oz]	1.64 kg [3.63 lb]
VC-BM**40**	39.8 [1.57]	40.9 [1.61]	12.9 [.51]	19.6 g [.63 oz]	2.21 kg [4.88 lb]
VC-BM**50**	50.0 [1.97]	51.1 [2.01]	23.1 [.91]	32.7 g [1.05 oz]	4.37 kg [9.63 lb]

VC-BM Micro Series Round Multi-Bellows Ordering Information

Ø20mm..... VC-**BM20**(DR)-(M)
Ø30mm..... VC-**BM30**(DR)-(M)
Ø40mm..... VC-**BM40**(DR)-(M)
Ø50mm..... VC-**BM50**(DR)-(M)

(DR) = Durometer/Material

~~S~~ N

(M) = Mounts Available

10M 18M 18F

Only Available in Ø20mm

Dimensions and technical information are subject to change without notice

TPLP Mag-Lift Part Lifting Magnets

Features:
- Provides instantaneous pick up and release without electricity.
- Maintains positive hold, even if air pressure is lost.
- Supplied with urethane pad which sofens the impact of the magnet and avoids marring or damage to delicate surfaces.

Benefits:
- NPT mount allows retrofit to existing assemblies.

Specifications:
Recommended Operating Pressure: 2.4 bar [35 psi]
Port: 3/8" NPT Compressed Air Port
Material: Machined, Anodized Aluminum, Urethane Pad (50 durometer - low skid)

1.50" Diameter Mag-Lift Magnet

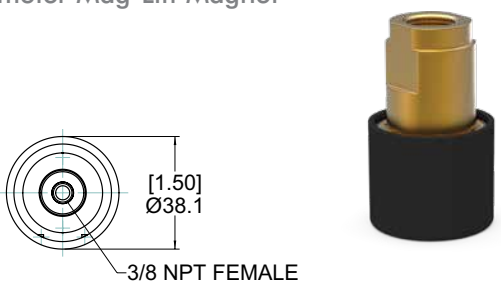

Model	Pad Only
CPI-TPLP15RB	RB15-CPI

3.00" Diameter Mag-Lift Magnet

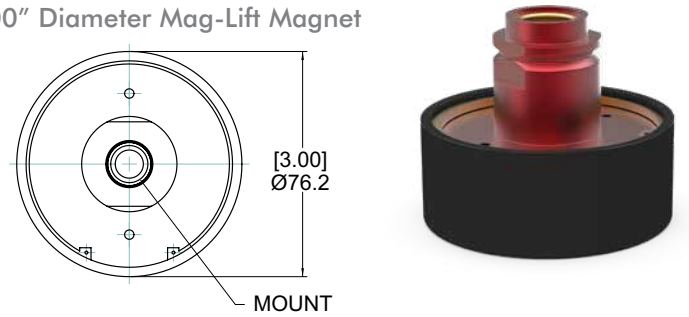

Mount	Model	Pad Only
3/8 NPT G3/8	CPI-TPLP50373 CPI-TPLP30BS	RB30-CPI

Note: The minimum air pressure required for the Mag-Lift to release parts is 25 psi. The suggested air pressure for normal operation is 35 psi. If part do not release immediately, increase the air pressure in 5 psi increments until the part releases. Do not exceed 60 psi. Air pressure should be measured at the inlet of the Mag-Lift to ensure effective operation.

TPLP 1.50" Diameter Mag-Lift Magnet - CPI-TPLP15RB - Capacities

Gage Of Steel (Ferrous Only)	26 GA (0.018")	22 GA (0.030")	16 GA (0.050")	12 GA (0.100")	3/16" (0.187")	Weight
With Pad	3.18 kg [7.0 lb]	4.08 kg [9.0 lb]	4.54 kg [10.0 lb]	4.54 kg [10.0 lb]	4.54 kg [10.0 lb]	136g [5 oz]
Without Pad	4.54 kg [10.0 lb]	6.35 kg [14.0 lb]	7.26 kg [16.0 lb]	[7.71 kg] 17.0 lb	7.71 kg [17.0 lb]	136g [5 oz]

TPLP 3.00" Diameter Mag-Lift Magnet - CPI-TPLP50373 - Capacities

Gage Of Steel (Ferrous Only)	26 GA (0.018")	22 GA (0.030")	16 GA (0.050")	12 GA (0.100")	3/16" (0.187")	Weight
With Pad	8.62 kg [19.0 lb]	13.61 kg [30.0 lb]	19.96 kg [44.0 lb]	19.96 kg [44.0 lb]	20.87 kg [46.0 lb]	363g [13 oz]
Without Pad	9.53 kg [21.0 lb]	14.97 kg [33.0 lb]	26.76 kg [59.0 lb]	27.22 kg [60.0 lb]	29.03 kg [64.0 lb]	363g [13 oz]

Note: Capacity values are stated at approximately 30% of the maximum holding value. Use this value for determining the quantity of Mag-Lift magnets required for an application.

ECOCUP SERIES

EcoCup™ creates vacuum without AIR!

Great for pick-and-place applications of flat, rigid, non-porous parts including: plastic, glass, solar panels, and electronics, as well as other consumer goods with smooth, flat surfaces.

The EcoCup™ features:

- Light-switch operation
- Ultra-fast actuation
- Noise-free operation
- Easy installation and setup
- Reduced maintenance costs
- Easy optional mounting to Scara robots
- Eliminated risk of air-borne contaminants

The OLD way

with a Typical Pneumatic Setup

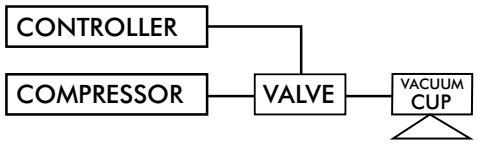

The NEW way

Using the new EcoCup™



No fittings, no valves, no hoses, no compressor, and absolutely no AIR!

EcoCup™ EC40 Electric Vacuum Cup Assembly



US Patent #9108319

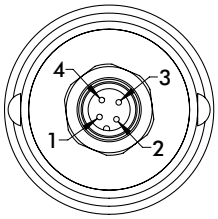

M12 4-PIN (MALE)
CONNECTOR FACE VIEW
1: NOT USED
2: NOT USED
3: -0 VDC
4: +24 VDC

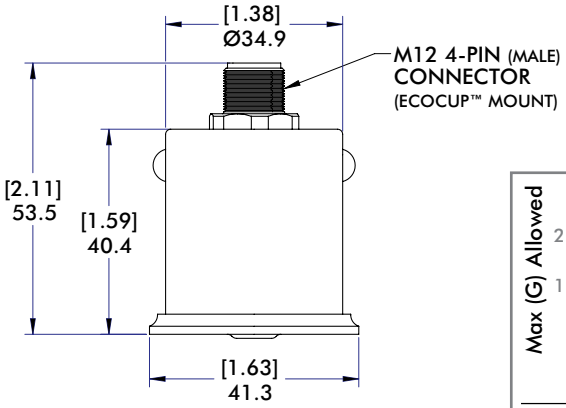

Specifications	VC-EC40-45N
Actuation Time	25 ms
Temperature Range	5° ~ 60°C [41° ~ 140°F]
Duty Cycle	50% (½ On, ½ Off)
Voltage	24 VDC
Current	0.5 Amp
Weight	0.12 kg [0.25 lb]
Cup Material	45 Durometer Nitrile

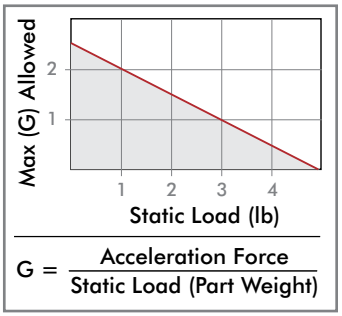

EcoCup™ EC40 Electric Vacuum Cup - Operation

Holding Capacity	VC-EC40-45N
Recommended Load	<0.45kg [1.0 lb]

Loads from 0.45kg [1.0 lb] up to 1.81kg [4.0 lb] max. may be used with longer movement times. (See chart in drawing area for greater detail).

Operating Instructions:

1. Set cup on smooth, flat surface of part.
2. Apply 24VDC to Pins 3 and 4 on M12 connector. (Center of cup lifts, creating vacuum)
3. Release voltage and part is released.

Dimensions and technical information are subject to change without notice

EcoCup™ EC40 Electric Vacuum Cup Assembly





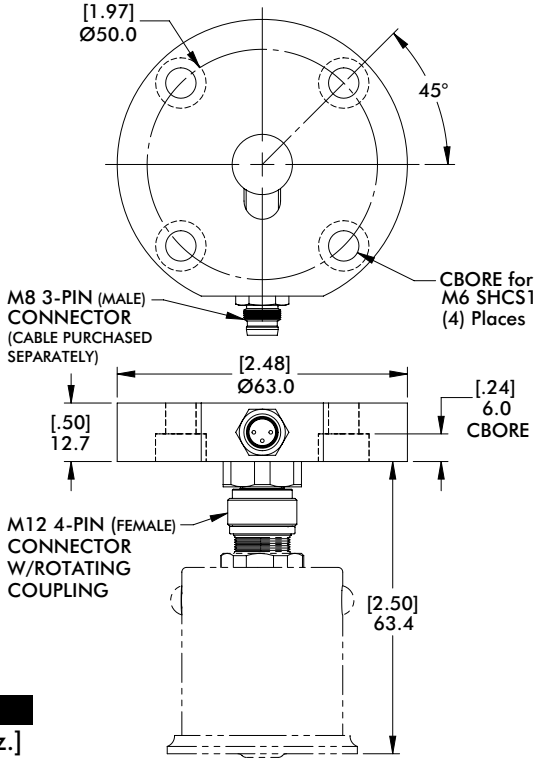

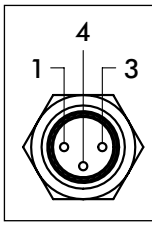

M8 3-PIN (MALE)
CONNECTOR
FACE VIEW
1: NOT USED
3: -0 VDC
4: +24 VDC

Model	Weight
VC-EC40-SRM50	111g [3.9 oz.]

EcoCup™ EC40 Optional Apple Core Mounting





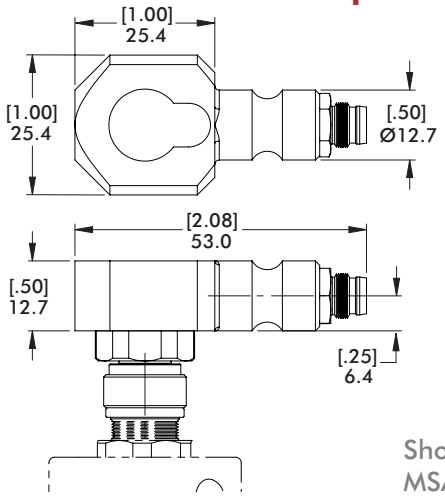

Model	Weight
VC-EC40-ACM50	40g [1.4 oz.]

Shown with DESTACO
MSA Series Swivel Arm

EcoCup™ EC40 M12 4-Pin Connector with Rotating Coupling
(Contact DESTACO for Custom Solutions)



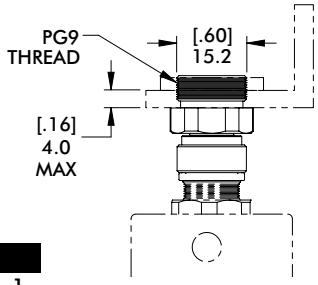

Model	Weight
Turck #FKM 4.4-0.5	14g [0.5 oz.]



Shown with custom
plate for array mounting

ARV AND VSA SERIES VENTURIES

Vacuum Products | Features and Specifications

ARV® Series Auto-Release Venturi Cup Mount

Requiring (1) air line, (1) valve:
Offers integrated automatic quick panel release and exhaust silencer in one part. Mounting options include right or left hand apple core mounting or no apple core mount for use with DESTACO's spring cup mounts. The ARV® Series is also available in a block style for remote mounting and each mount can be ordered with Imperial or Metric ports.



US Patents #7,540,309

ARV® Performance:

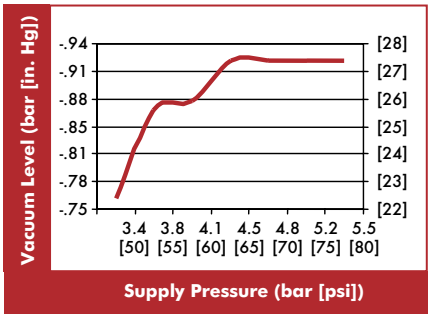

Specifications @ 4 bar [60psi]:
Speed to Vacuum: 0.2-0.3 seconds
Speed to Release: 0.02 seconds
Air Consumption:
Vacuum: 40 l/m [1.4 scfm]
Blow-off: 0
Noise Level (at one meter): 68dBA
Material: Aluminum

VSA Series Venturi Cup Mount



Blow-off typically requires two air lines and multiple valves. The VSA series offers a low-profile version as shown. Additional options includes silencer and sensor port options. Mounting threads can also be ordered in Imperial or Metric ports.

We also offers PA Series cup mounts.

VSA Performance:

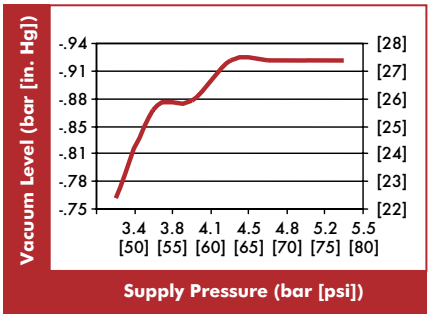

Specifications @ 4 bar [60psi]:
Speed to Vacuum: .36 seconds
Speed to Release: 0.08 seconds
Air Consumption:
Vacuum: 40 l/m [1.4 scfm]
Blow-off: 2.6 liters [0.09 ft³]
(156 l/m [5.5scfm] @ 1 sec. duration)
Noise Level (At one meter):
Inline to exhaust: 76dBA
Inline to exhaust with Silencer: 68dBA
Material: Aluminum

Dimensions and technical information are subject to change without notice

ARV SERIES VENTURIES

Vacuum Products | Dimensions | Ordering Information



Left Hand Apple Core
CPI-VSA-ARV**L-750**-(**X**)
114g [0.25lb]



Right Hand Apple Core
CPI-VSA-ARV**R-750**-(**X**)
114g [0.25lb]



Without Apple Core
CPI-VSA-ARV**R-000**-(**X**)
86g [019lb]



RH/LH Spherical Ball
CPI-VSA-ARV(R/L)-**B112**-(X)
CPI-VSA-ARV(R/L)-**B32**-(X)



(**X**)
Mounting Thread
U38 = 3/8" NPT Male
G38 = 3/8" G Male

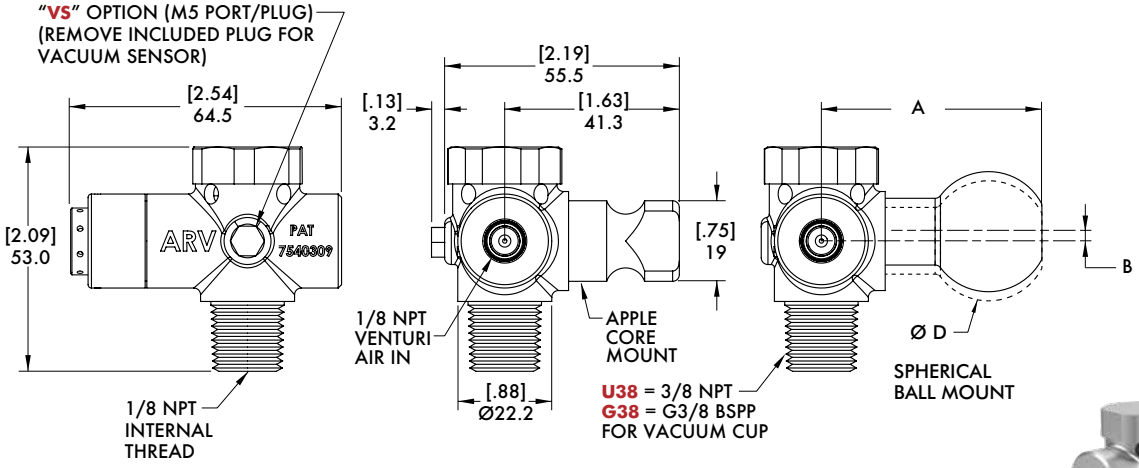



Vacuum Sensor Option
Add "**-VS**" to end of "**ARV**" order code

US Patents #7,540,309 - 7,681,603 - 7,950,422

Model Number	A	B	ØD	Weight
CPI-VSA-ARV(R/L)-**B112**-(X)	[1.85] 47.1	0	[1.13] 28.5	[0.28 lb] 126g
CPI-VSA-ARV(R/L)-**B32**-(X)	[1.93] 49	[0.12] 3.2	[1.26] 32	[0.30 lb] 134g





B112-01
28.58mm ball only

B112-32-01
32mm ball only

Venturi Style Vacuum Generator Cup Mounts

ARV® Block Style Dimensions and Ordering Information



Block Style
CPI-VSA-ARV**R-312**-(**X**)
(**X**) = Vacuum Port Thread
U38 = 3/8" NPT Female
G38 = 3/8" G Female

Weight
104g [0.23lb]

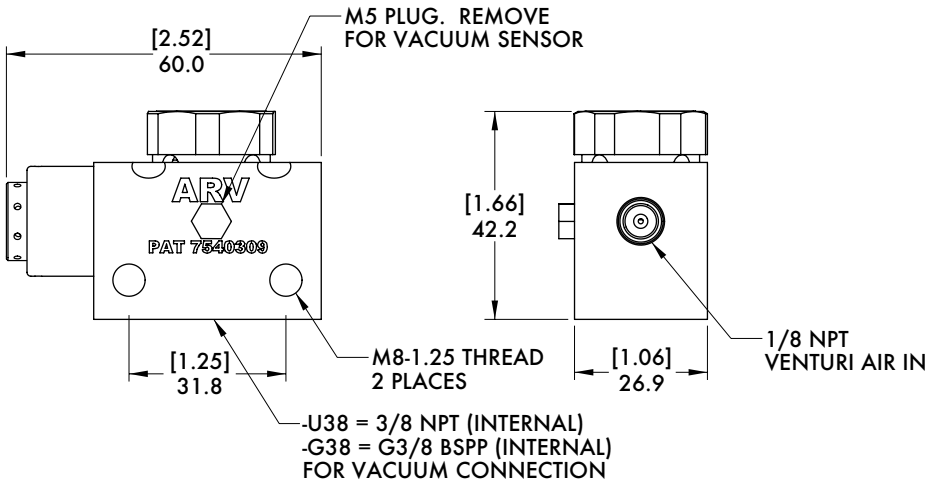

MICRO TOOLING VENTURI

Vacuum Products | Dimensions | Technical Specifications

VSA 500 Series MicroTool Apple Core





Features:
- MicroTool sized venturi.
- 1/8 NPT, 1/8 G Ports.

Benefits:
- Small and lightweight.
- Convenient mounts for most small vacuum cups.



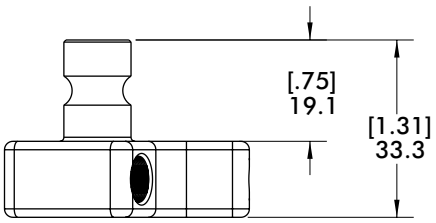

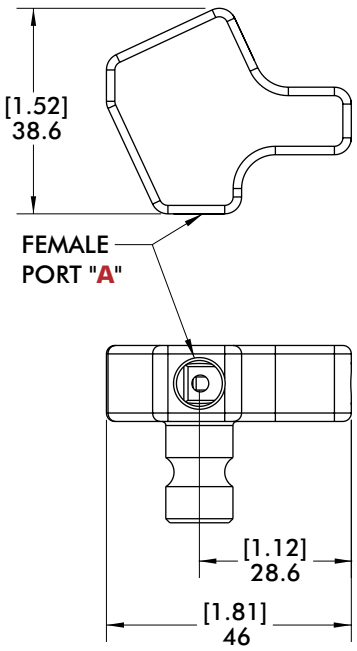

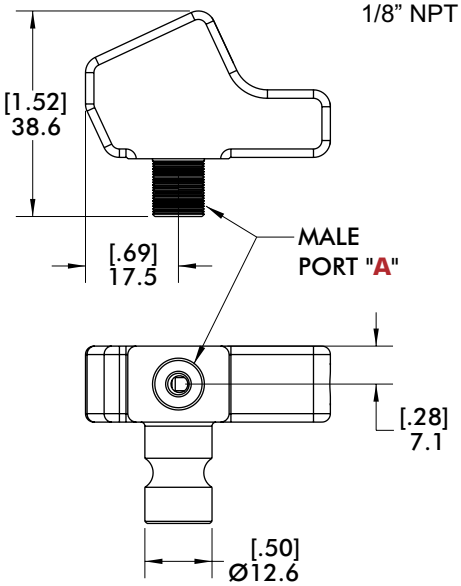

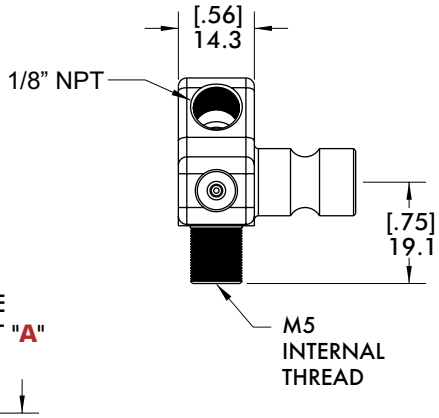



Weight
57g [2 oz.]

500 Series Venturi MicroTool - CPI-VSA-500-"**A**"

	Description	Port A
	Female 1/8" NPT to Female 1/8" NPT	**F18**
	Female 1/8" NPT to Male 1/8" NPT	**M18**

US Patents # 7,540,309 - 7,681,603 - 7,950,422

VSA SERIES VENTURIES

Vacuum Products | Dimensions | Technical Specifications

VSA Low-Profile 750/19 Series Apple-Core with Blow-Off

Features:
- Low profile construction.
- Integrated blow-off.
- Optional vacuum sensing port.
- Optional exhaust silencer.
- Imperial or Metric ports.

Benefits:
- Lower tool profile to fit in smaller spaces.
- Quick release of panels.
- Vacuum level or part present sensing.
- Quiet operation.



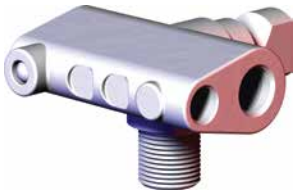

Low-Profile 750/19 w/ Blow Off No Options
CPI-VSA-(**X**)-BO-LP



Low-Profile 750/19 with Blow Off with Detector Option
CPI-VSA-(**X**)-BO-LP-**DET**



Low-Profile 750/19 with Blow Off with "VS" Option
CPI-VSA-(**X**)-BO-LP-**VS**

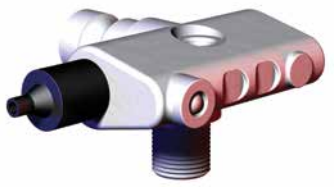

For Silencer Option; add "ST2" to the end of order code (as shown).
CPI-VSA-(**X**)-BO-LP-VS-**ST2**

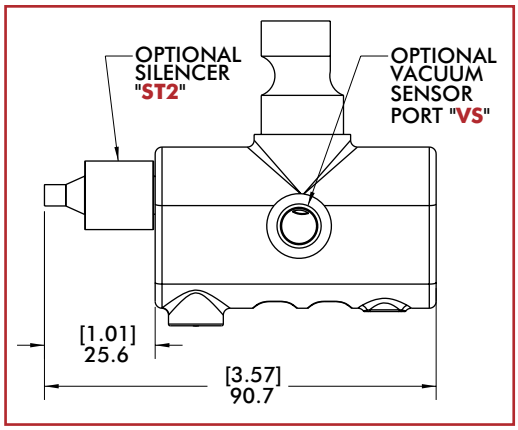

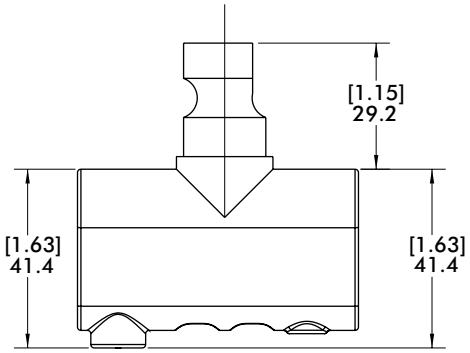

VS/DET Thread
DET = M5
VS = 1/8 NPT

Weight
170g [6 oz.]

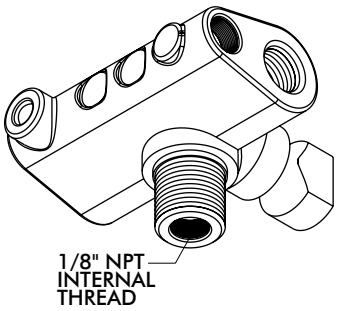

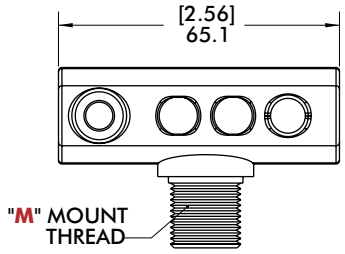

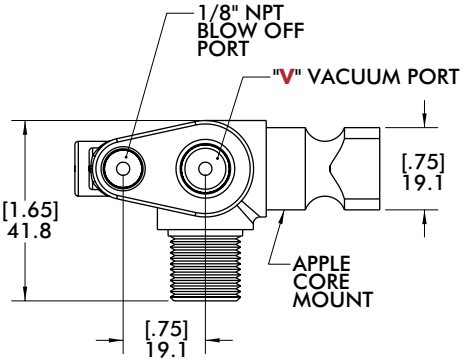

Low Profile 750/19 Series w/blow-off - CPI-VSA-(**X**)-BO-LP

Version	Mount Thread "M"	Vacuum Port "V"	(X)
Metric	3/8" G Male	1/4" G	**19**
Imperial	3/8" NPT Male	1/4" NPT	**750**

ACCELERATE® PORT ONLY ADAPTORS

Vacuum Products | Dimensions | Technical Specifications

PA Series

Apple Core Mount

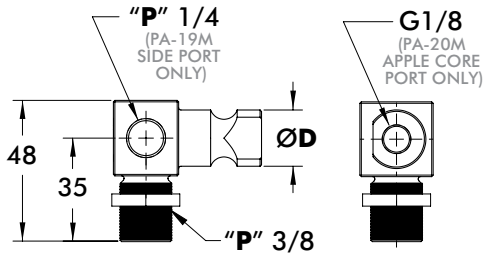

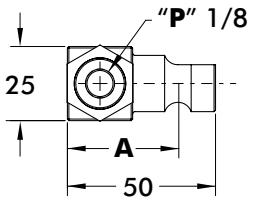



CPI-LNA-VSA-19
G1/4 Locking Nut

CPI-LNB-VSA-19
G3/8 Locking Nut



PA-19M



PA-20M

Material: Aluminum
Load: 150Nm

Weight includes locking nut and plug (not shown) *Except U38 models*

Model Number	A	ØD	P	Weight
PA-19M-G38-A	[1.46] 37	[0.75] 19	G	[0.17 lb] 77g
PA-19M-U38-A			NPT	[0.15 lb] 68g
PA-20M-G38-AC-A	[1.34] 34	[0.79] 20	G	[0.16 lb] 71g

Ball Mount

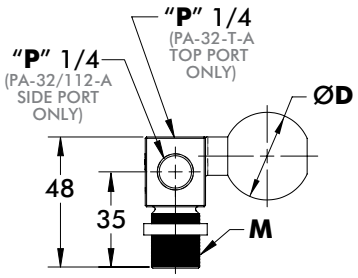

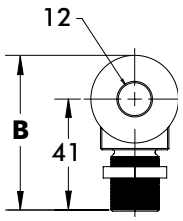

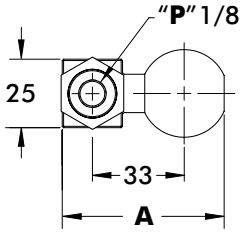



PA-B32/B112

PA-B32-G38-T-A

Material: Aluminum
Load: 150Nm

Weight includes locking nut and plug (not shown) *Except U38 models*

Model Number	A	B	ØD	M	P	Weight
PA-B32-G38-A	[2.32] 59	[2.24] 57	[1.26] 32	G3/8	G	[0.23 lb] 103g
PA-B32-G38-T-A					G	[0.21 lb] 96g
PA-B32-U38-A				3/8 NPT	NPT	[0.21 lb] 94g
PA-B32-G14-A				G1/4	G	[0.21 lb] 95g
PA-B112-G38-A	[2.24] 57	[2.17] 55	[1.12] 28	G3/8	G	[0.20 lb] 89g
PA-B112-U38-A				3/8 NPT	NPT	[0.18 lb] 80g

PA 28mm - 32mm Ball for C-Mount



Material: Aluminum
Load: 150Nm

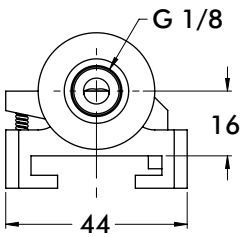

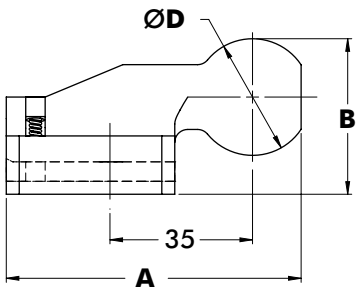

Model Number	A	B	ØD	Weight
CPI-PA-B112-CM	[2.84] 72.1	[1.50] 38.1	[1.13] 28.5	[0.23 lb] 106g
CPI-PA-B32-CM	[2.98] 75.7	[1.69] 42.9	[1.26] 32	[0.27 lb] 122g

Dimensions and technical information are subject to change without notice

MICRO TOOLING PORT ONLY ADAPTER

Vacuum Products | Dimensions | Technical Specifications

PA 500 Series

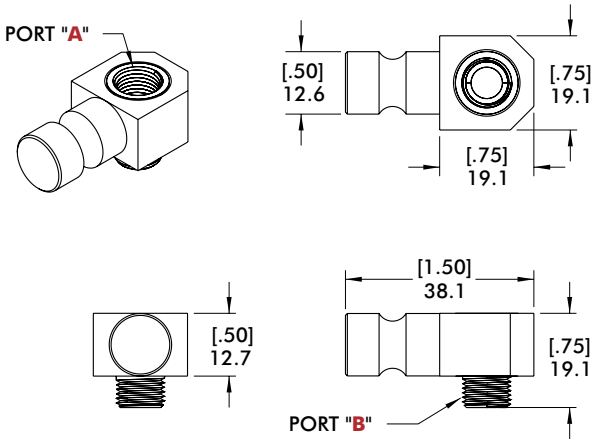

CPI-PA-500-"A"-"B" Ordering Information

Description	A	B	Weight
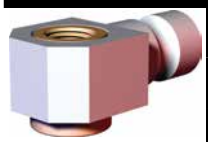 Female 1/8" NPT/Female 1/8" NPT	F18	F18	23g [0.8 oz.]
Female 1/8" G/Female 1/8" G	FG18	FG18	
Female M5/Female M5	FM5	FM5	
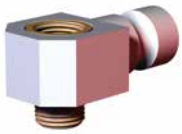 Female 1/8" NPT/Male 1/8" NPT	F18	M18	
Female 1/8" G/Male 1/8" G	FG18	MG18	
Female M5/Male M5	FM5	MM5	

PAT 1/8 NPT Vacuum Extension

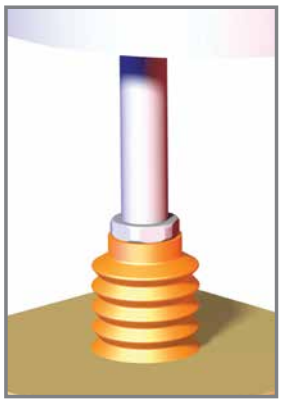

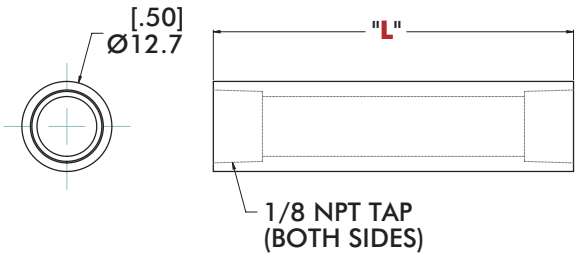

"L"
Standard
Lengths
02 = 2.00"
03 = 3.00"
04 = 4.00"
05 = 5.00"
06 = 6.00"

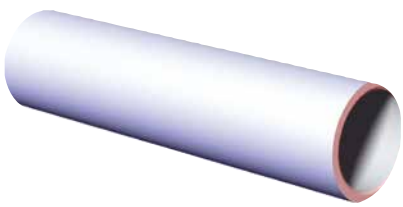

Model Number	Weight
CPI-PAT-50T-"L"-U18	[0.13 lb/ft] 193.0 g/m

SPRING-LOADED CUP MOUNTS

Vacuum Products | Dimensions | Technical Specifications

LC Bulk Head Style Micro Series Level Compensators

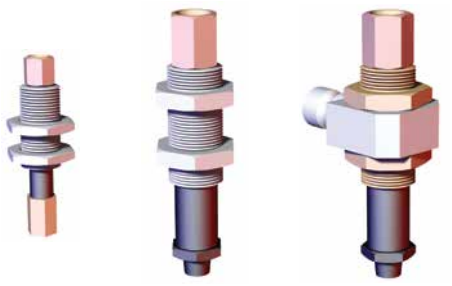

Specifications:
Material: Aluminum

Features:
- M5 or G mounting threads and vacuum ports.



0.30" TRAVEL
ORDERING INFORMATION
CPI-**LC10**

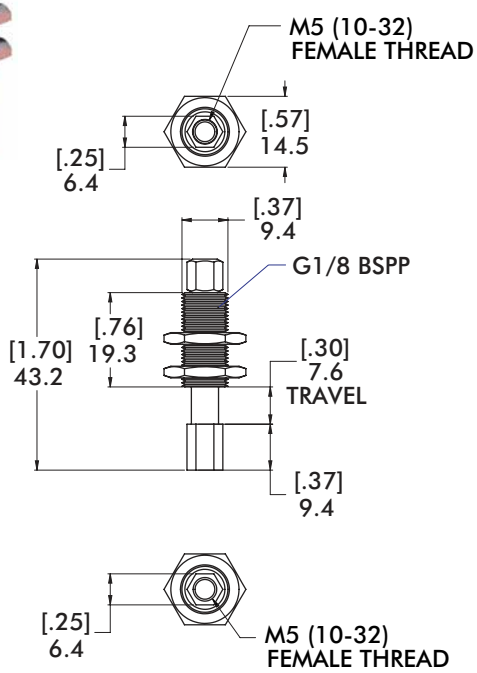

Weight
5.7 g [0.2 oz.]



0.75" TRAVEL
ORDERING INFORMATION
CPI-**LC18**

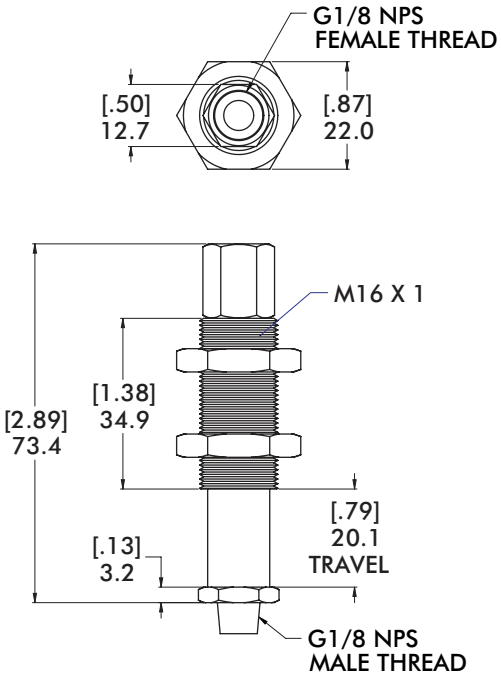

Weight
28.3 g [1.0 oz.]

LCM Series Mount

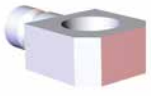

CPI-LCM-10-"D"

Weight
23 g [0.8 oz.]

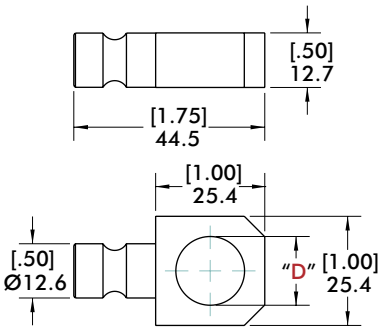

"D"= (Ø) Diameter
16 = Ø16mm [.63"]
10 = Ø10mm [.39"]

Dimensions and technical information are subject to change without notice

SPRING-LOADED CUP MOUNTS

Vacuum Products | Dimensions | Technical Specifications

RCM Bulkhead Style Standard Travel

Features:
- Available in three different travel lengths.
- NPT or G mounting threads and vacuum ports.

Specifications:
Material: Aluminum

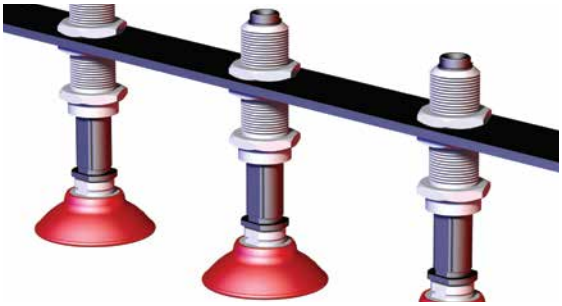

0.75" TRAVEL
ORDERING INFORMATION
CPI-RCM-**30**

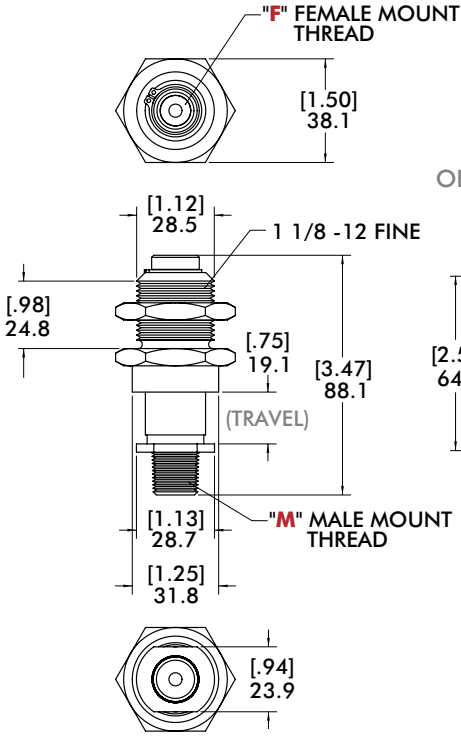

1.50" TRAVEL
ORDERING INFORMATION
CPI-RCM-**150**-U14-NR

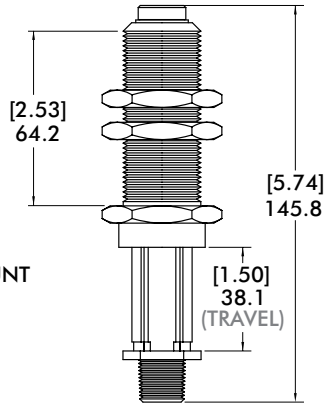

3.00" TRAVEL
ORDERING INFORMATION
CPI-RCM-**300**-U14-NR

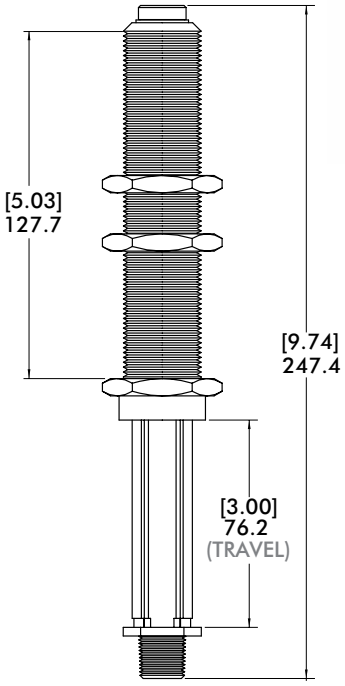

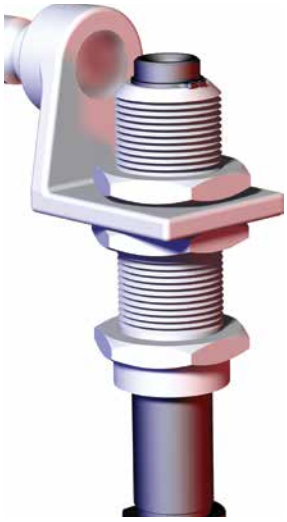

CPI-RCM-150-U14-NR
Shown with CPI-SAP-30

Bulkhead Mount - CPI-RCM-XXX

Version	Mount Thread M	Vacuum Port F
Imperial	3/8" NPT Male	1/4" NPT

Weight
.75" Travel = 142g [5 oz]
1.50" Travel = 227g [8 oz]
3.00" Travel = 340g [12 oz]

SPRING-LOADED CUP MOUNTS

Vacuum Products | Dimensions | Technical Specifications | Ordering Information

SCM Apple-Core Style



Specifications:
Material: Aluminum used on 1.50"/40mm and 3.00"/75mm travel.

Features:
- Available in three different travel lengths.
- Apple core .75" [19mm] mounting for adjustment along on axis.
- NPT or G mounting threads and vacuum ports.

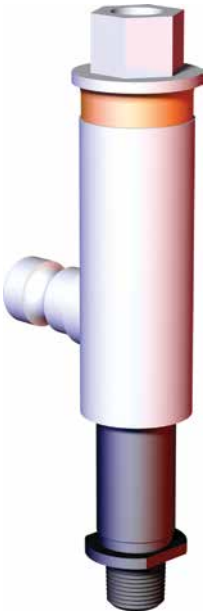

0.75"/19MM TRAVEL
ORDERING INFORMATION
CPI-SCM-**075**-(**X**)-NR (ENGLISH)
CPI-SCM-**19**-(**X**)-NR (METRIC)

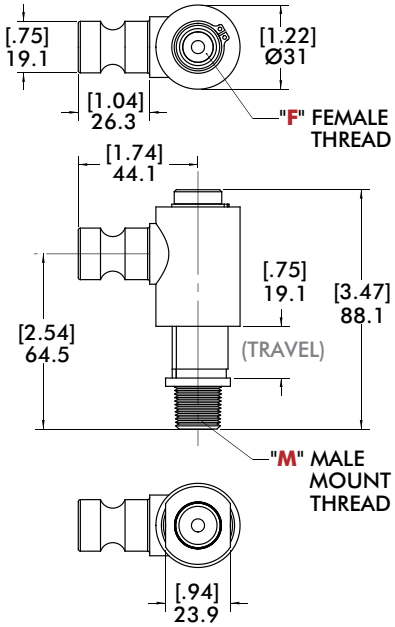

1.50"/40MM TRAVEL
ORDERING INFORMATION
CPI-SCM-**150**-(**X**)-NR (ENGLISH)
CPI-SCM-**40**-(**X**)-NR (METRIC)

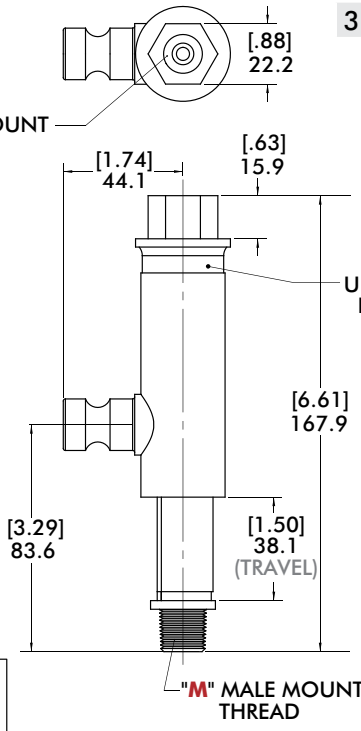

Weight
.75"19mm Travel = 142g [5 oz]
1.50"/40mm Travel = 227g [8 oz]
3.00"/75mm Travel = 340g [12 oz]

3.00"/75MM TRAVEL
ORDERING INFORMATION
CPI-SCM-**300**-(**X**)-NR (ENGLISH)
CPI-SCM-**75**-(**X**)-NR (METRIC)

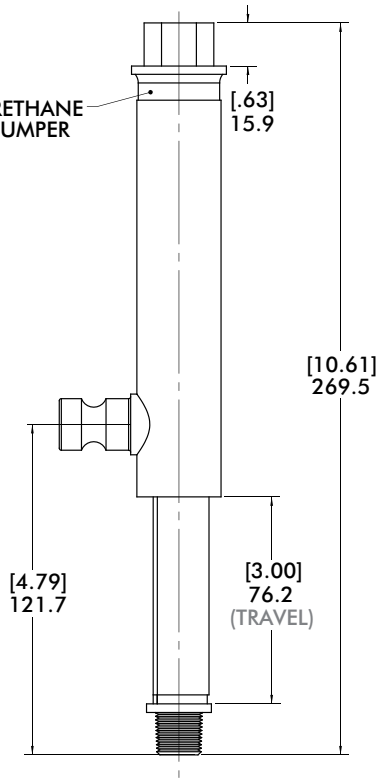

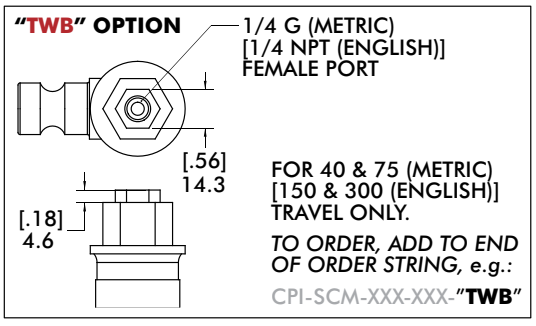

(NR = NON ROTATING)

CPI-SCM-(**19/075**)-(**X**)-NR Ports

Version	M	F	(X)
Metric	3/8" G	1/4" G	G14
Imperial	3/8" NPT	1/4" NPT	U14

CPI-SCM-(**40/150** & **75/300**)-(**X**)-NR Ports

Version	M	F	(X)
Metric	3/8" G	3/8" G	G14
Imperial	3/8" NPT	3/8" NPT	U14

Dimensions and technical information are subject to change without notice

SPRING-LOADED CUP MOUNTS

TCL T-Clamp Ø1.00" (in)

Features:

- Four mounting options.
- Three travel lengths.
- NPT or G mounting threads and vacuum ports.
- Urethane shock absorber.
- Teflon coated shaft.
- Fully modular construction.

Benefits:

- Urethane shock absorber reduces "pick-up" shock.
- Extensive use of polymers reduce weight and cost.
- Extended travel cup mounts can be reconfigured or rebuilt.
- Smooth operation, reduced wear.

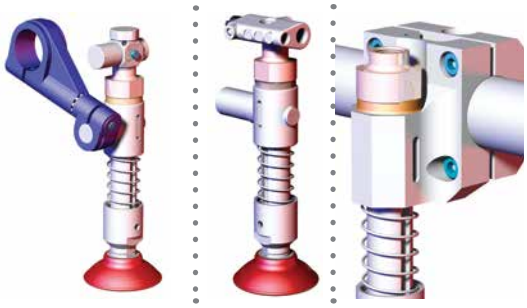

Ø1.25" Bulkhead Style
CPI-SCM(**B**)-"**T**"

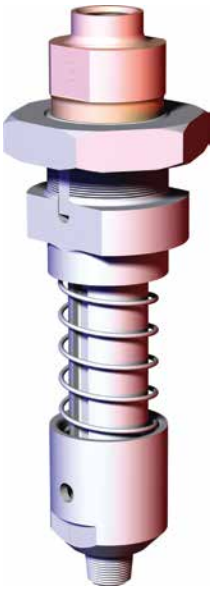

Ø0.75" Apple Core Style
CPI-SCM(**A**)-"**T**"

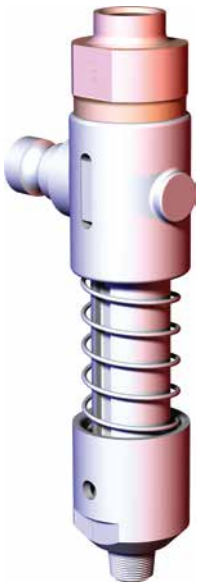

Ø1.00"/25MM Extension Style
CPI-SCM(**10**/**25**)-"**T**"

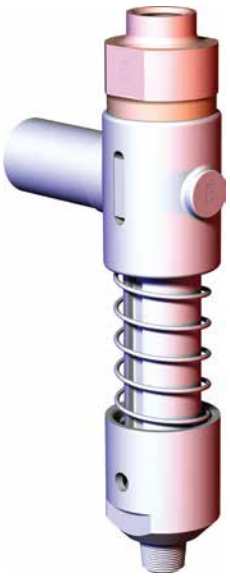

Travel Length CPI-SCM(**X**)-"**T**"

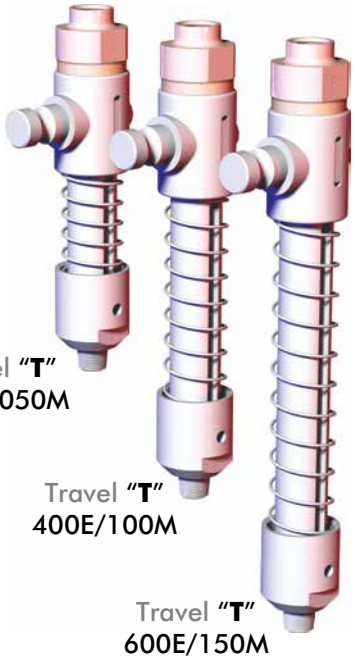

Ø1.50"/40MM Tube Mount
CPI-SCM(**C**)-"**D**"-"**T**"-"**O**"

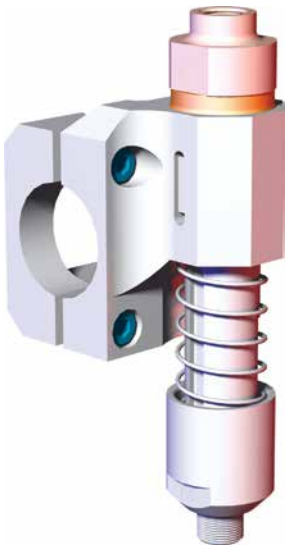

Ø1.50"/40MM Single Strap Tube Mount
CPI-SCM(**S**)-"**D**"-"**T**"-"**O**"



Ø1.50"/45MM Single Strap Tube Mount
CPI-SCMS-45B-"**T**"



SPRING LOADED VACUUM CUP MOUNTS

Vacuum Products | Extended Travel Dimensions

SCM Bulkhead/Apple Core/Extension Style

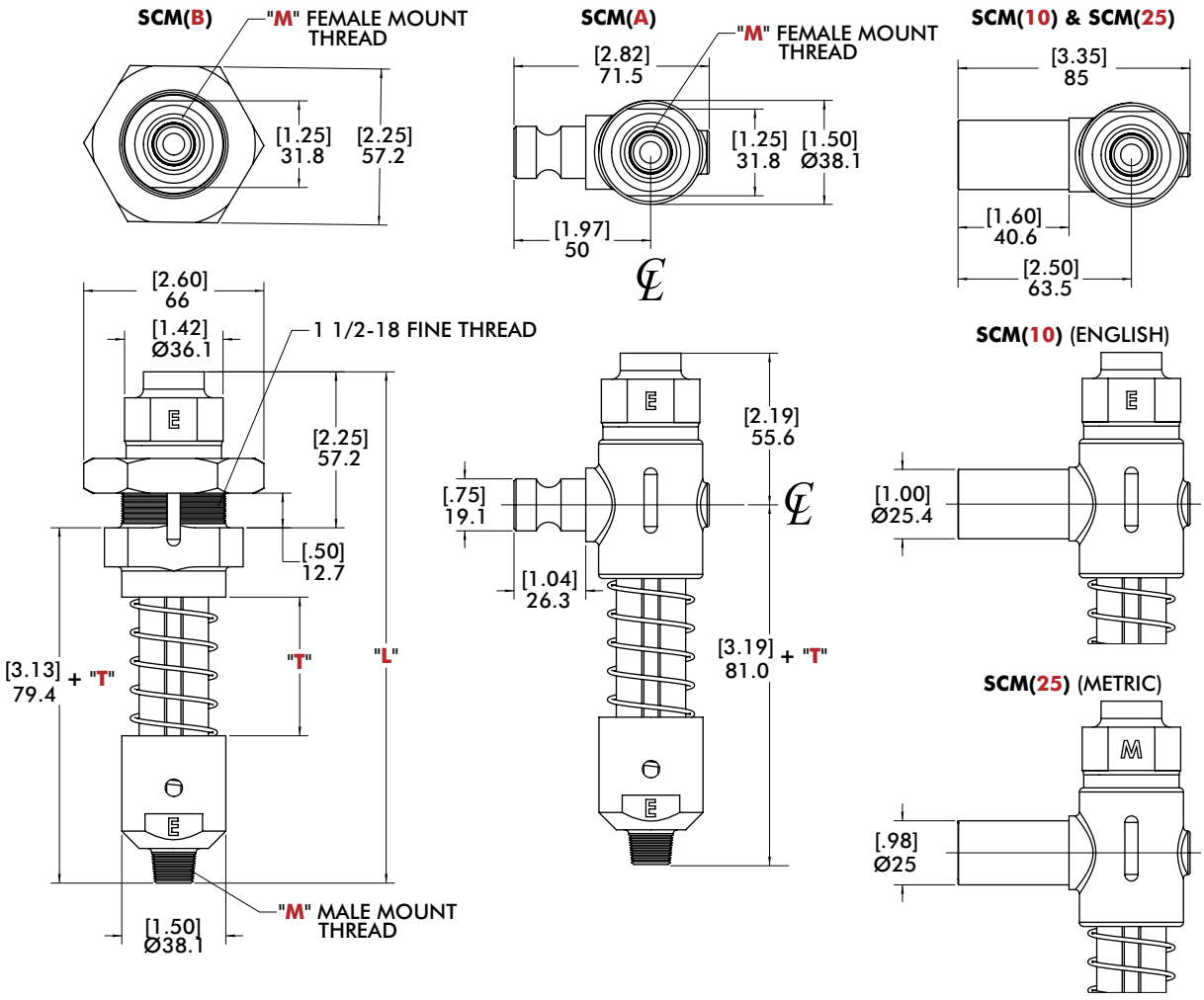

SCM Travel and Length - CPI-SCM(X)-"T"

Version	Travel "T"	L	M	Weight
 Imperial	**200E** (2.00" Vertical Travel)	187.3 [7.38]	3/8" NPT	.48kg [1.06 lb]
	400E (4.00" Vertical Travel)	238.2 [9.38]	3/8" NPT	.53kg [1.16 lb]
	600E (6.00" Vertical Travel)	288.9 [11.38]	3/8" NPT	.58kg [1.27 lb]
 Metric	**050M** (50mm Vertical Travel)	187.3 [7.38]	3/8" G	.48kg [1.06 lb]
	100M (100mm Vertical Travel)	238.2 [9.38]	3/8" G	.53kg [1.16 lb]
	150M (150mm Vertical Travel)	288.9 [11.38]	3/8" G	.58kg [1.27 lb]

Dimensions and technical information are subject to change without notice

SPRING-LOADED CUP MOUNTS

Vacuum Products | Extended Travel Dimensions

SCM Tube Mounted

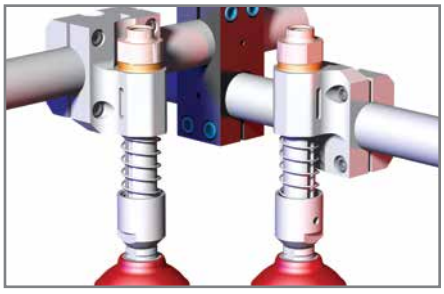

Patent Pending

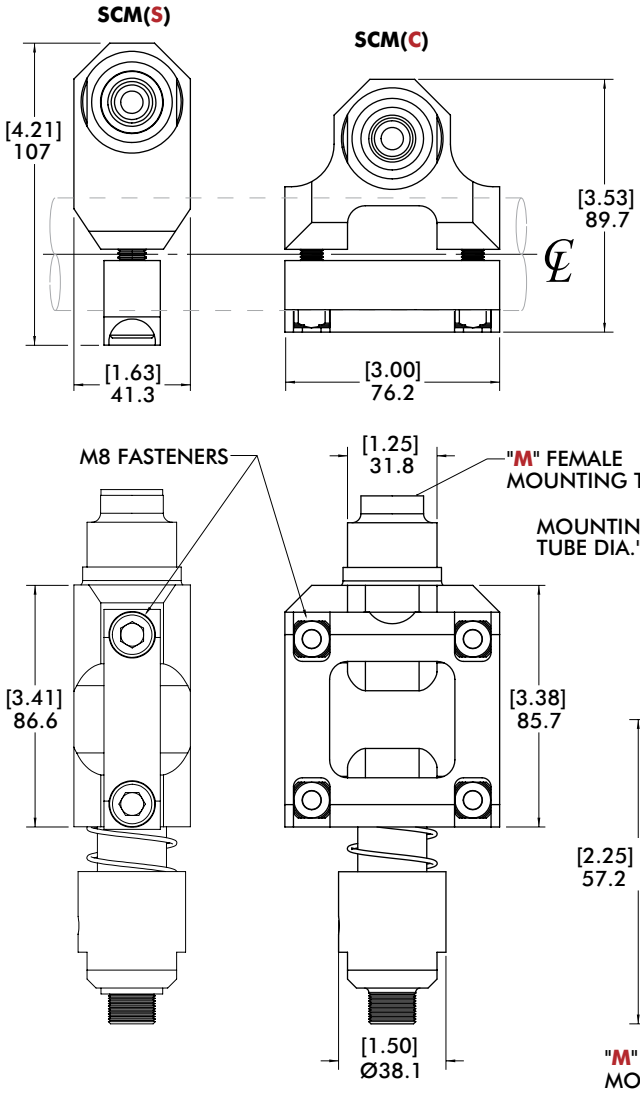

Model	C
CPI-SCM**C**	41.3 [1.63]
CPI-SCM**S**	54.1 [2.13]

SCM Travel and Length - CPI-SCM(X)-"D"-"T"-"O"

Version	Travel "T"	L	M	D	Weight
 Imperial	200E (2.00" Vertical Travel)	187.3 [7.38]	3/8" NPT	150 (Ø1.50")	.85kg [1.87 lb]
	400E (4.00" Vertical Travel)	238.2 [9.38]	3/8" NPT	150 (Ø1.50")	.90kg [1.97 lb]
	600E (6.00" Vertical Travel)	288.9 [11.38]	3/8" NPT	150 (Ø1.50")	.94kg [2.08 lb]
 Metric	050M (50mm Vertical Travel)	187.3 [7.38]	3/8" G	40M (Ø40mm)	.85kg [1.87 lb]
	100M (100mm Vertical Travel)	238.2 [9.38]	3/8" G	40M (Ø40mm)	.90kg [1.97 lb]
	150M (150mm Vertical Travel)	288.9 [11.38]	3/8" G	40M (Ø40mm)	.94kg [2.08 lb]

BODY BUILDER SPRING LOADED VACUUM CUP MOUNTS

Vacuum Products | Extended Travel Dimensions

SCM BodyBuilder Mounted

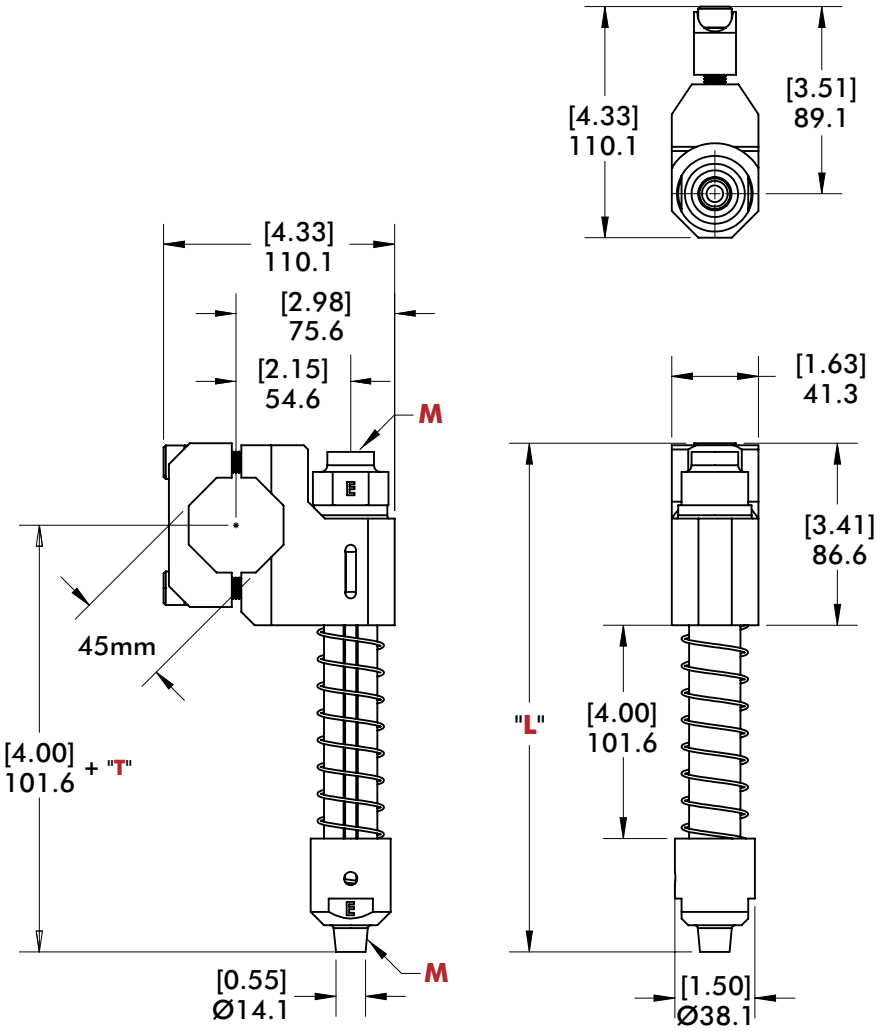

SCM Travel and Length - CPI-SCMS-45B-"**T**"

Version	Travel "T"	L	M	Weight
 Imperial	200E (2.00" Vertical Travel)	191.5 [7.54]	3/8" NPT	.77kg [1.7 lb]
	400E (4.00" Vertical Travel)	242.2 [9.54]	3/8" NPT	.82kg [1.8 lb]
	600E (6.00" Vertical Travel)	293.1 [11.54]	3/8" NPT	.87kg [1.9 lb]
 Metric	050M (50mm Vertical Travel)	191.5 [7.54]	3/8" G	.77kg [1.7 lb]
	100M (100mm Vertical Travel)	242.2 [9.54]	3/8" G	.82kg [1.8 lb]
	150M (150mm Vertical Travel)	293.1 [11.54]	3/8" G	.87kg [1.9 lb]

Dimensions and technical information are subject to change without notice

SPRING LOADED VACUUM CUP MOUNT ACCESSORIES

Vacuum Products | Dimensions | Technical Specifications

SAP Extended Travel Proximity Switch Mounts

Specifications:
Material: Aluminum

Features:
- Mounts 30mm barrel style and square style proximity switches to the extended travel spring-loaded cup mounts.



SAP 30mm Barrel Style

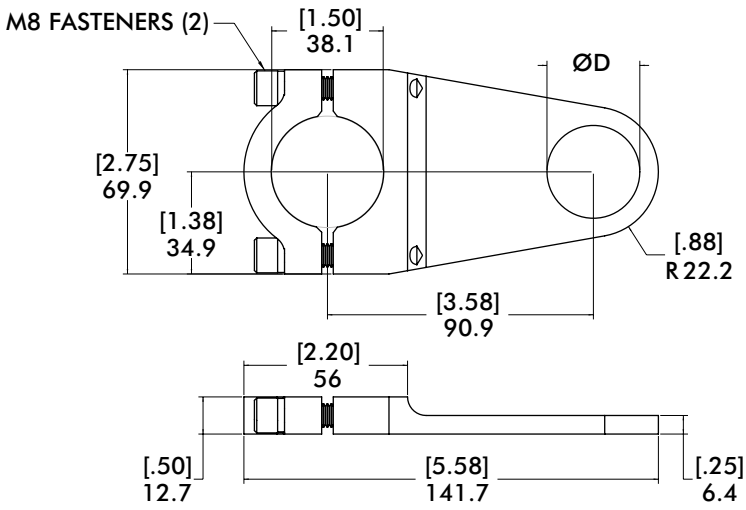

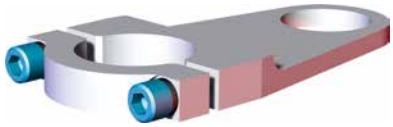

Model	ØD	Weight
CPI-SAP-30-PM-150	[1.25] 31.8	.13 kg [.29 lb]
CPI-SAP-18-PM-150	[.75] 19	.17 kg [.38 lb]

SAP 50mm Square Style

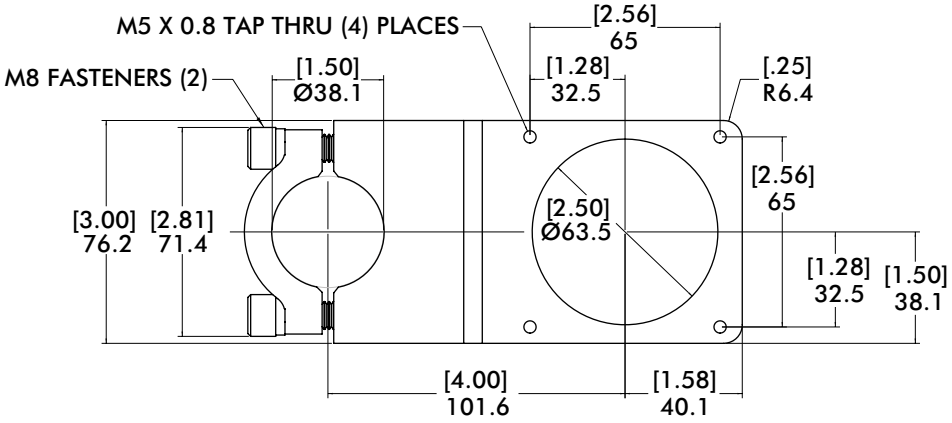

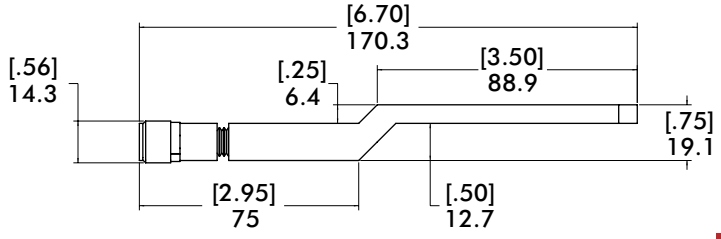

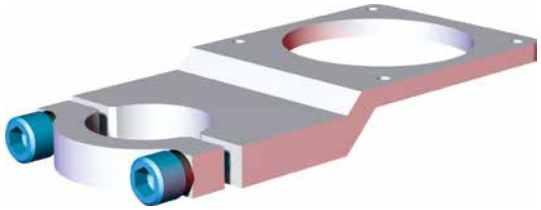

Model	Weight
CPI-SAP-NI50-PM-150	.23 kg [.56 lb]

DOUBLE BLANK DETECTOR QUICK-CHANGE MOUNT

Vacuum Products | Dimensions | Technical Specifications

DBD Quick-Change Mount

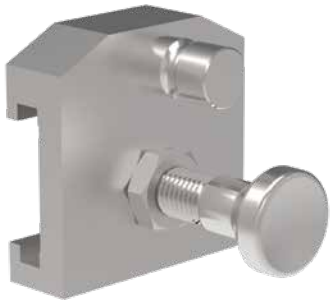

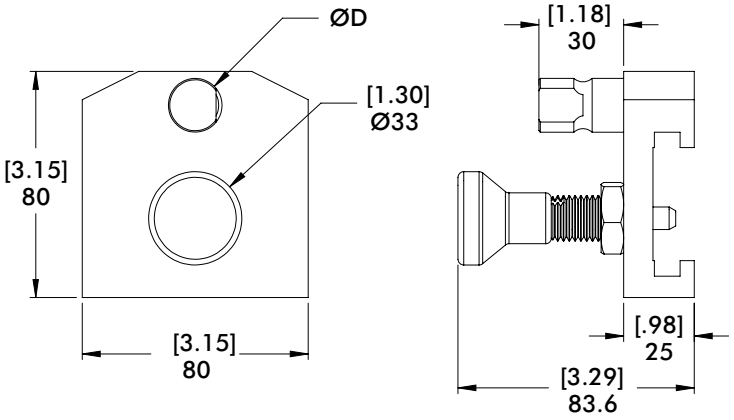

Model	ØD	Weight
DBD-19-QC-A	19mm	522g [1.15 lb]
DBD-20-QC-A	20mm	527g [1.16 lb]

DESTACKER DOUBLE BLANK DETECTOR SPRING MOUNTS

DBD Series

Features:
- Orbital design allows compliance to blanks within +/- 15° without having to make any automation, tooling or robot adjustments. [US Patent #4,662,668]
- Elimination of compression springs results in long-lasting, reliable performance
- HD Version provides added stability for heavy-duty applications

Specifications:
Operating Pressure: 4 bar [60psi]
Electric: Sensor supplied by customer

CPI-DBD-(X)-SCM**B**-(T)
Ø1.25" Thru Hole
Bulkhead Mount



CPI-DBD-(X)-SCM**10/25**-(T)
Ø1.00"/25mm
Extension Mount



CPI-DBD-(X)-SCM**B**-(T)-**HD**
Ø1.00"/25mm Tube Mount
Heavy-duty (Double Pogo)



CPI – **DBD** – ( ) – ( ) – ( ) – **HD** — **Heavy-Duty** (**SCMB** (Double Pogo) only)

Base Model
DBD Double Blank Detector

Sensor Size
42 Ø42mm
54 Ø54mm
(Sensors not Included)

Mounting Style
SCM10 Ø1.00" Extension Mount
SCM25 Ø25mm Extension Mount
SCMB Bulkhead Mount

Vertical Travel (**T**) (See pages 46-47)
200E 2.00 in. with NPT Vacuum Port (Except -HD)
400E 4.00 in. with NPT Vacuum Port
600E 6.00 in. with NPT Vacuum Port
800E 8.00 in. with NPT Vacuum Port (-HD only)
050M 50mm with G Vacuum Port (Except -HD)
100M 100mm with G Vacuum Port
150M 150mm with G Vacuum Port
200M 200mm with G Vacuum Port (-HD only)

US/INTL Patents: 6,988,696 / 7,281,739 / 1,921,031

CPI-DBD-(**X**)-(**T**)-SCM**C**-(**D**)
Ø1.25"/40mm
Tube Mount



X=Sensor Size
42 Ø42mm
54 Ø54mm
(Sensors not Included)

T=Vertical Travel
200E 2.00 in. with NPT Vacuum Port
400E 4.00 in. with NPT Vacuum Port
600E 6.00 in. with NPT Vacuum Port
050M 50mm with G Vacuum Port
100M 100mm with G Vacuum Port
150M 150mm with G Vacuum Port

D=Tube Mount
40 40mm Tube Mount (Metric Only)
150 1.50" Tube Mount (Imperial Only)
(See page 50)

CPI-DBD-42-200E-SCM**S**
Ø45mm
BodyBuilder Mount
(See page 51)



DESTACKER DOUBLE BLANK DETECTOR SPRING MOUNTS

Vacuum Products | Dimensions | Technical Specifications

DBD Bulkhead/Extension Style Dimensions



SCM**B**
Ø1.25" Thru Hole
Bulkhead Mount



SCM**10/25**
Ø1.00"/25mm
Extension Mount

SCM(B)

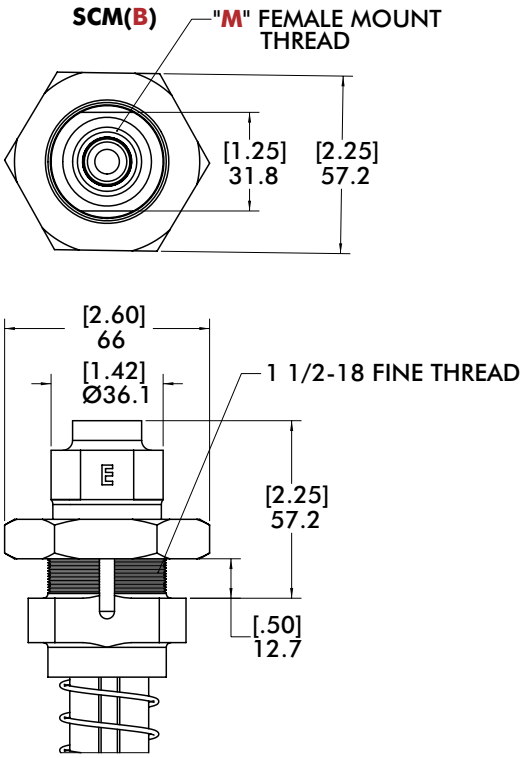

Version	(M)
Imperial 	3/8" NPT
Metric 	3/8" G

SCM(10) & SCM(25)

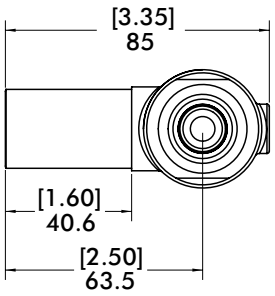

SCM(10) (ENGLISH)

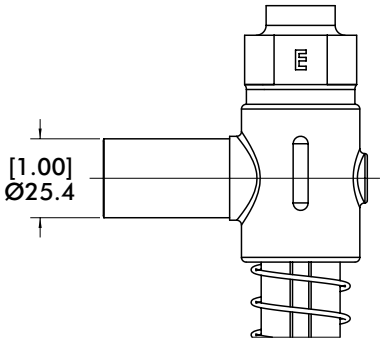

SCM(25) (METRIC)

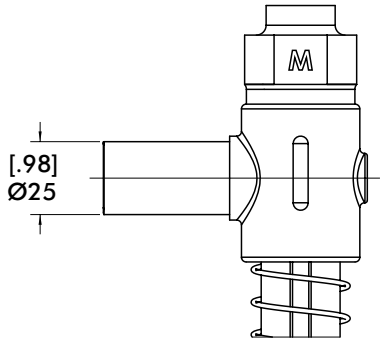

Dimensions and technical information are subject to change without notice

DESTACKER DOUBLE BLANK DETECTOR SPRING MOUNTS

Vacuum Products | Dimensions | Technical Specifications

DBD Bulkhead/Extension Style

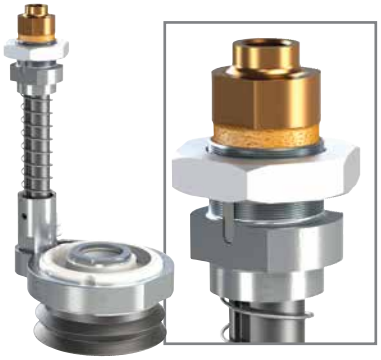



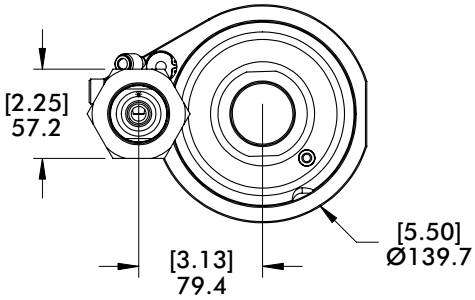

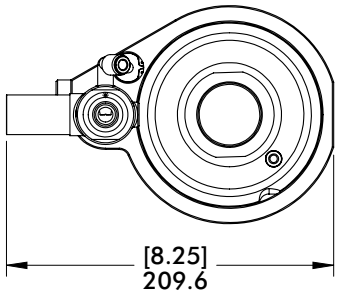

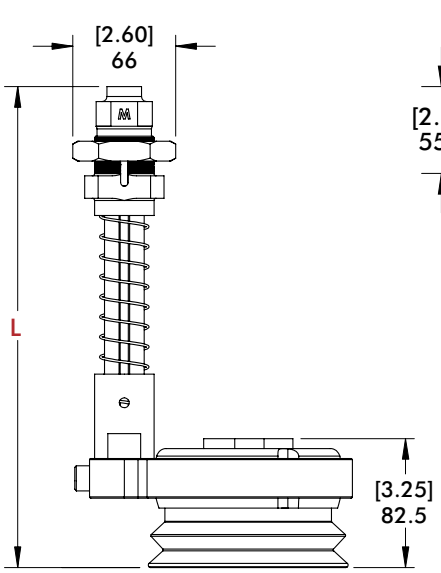

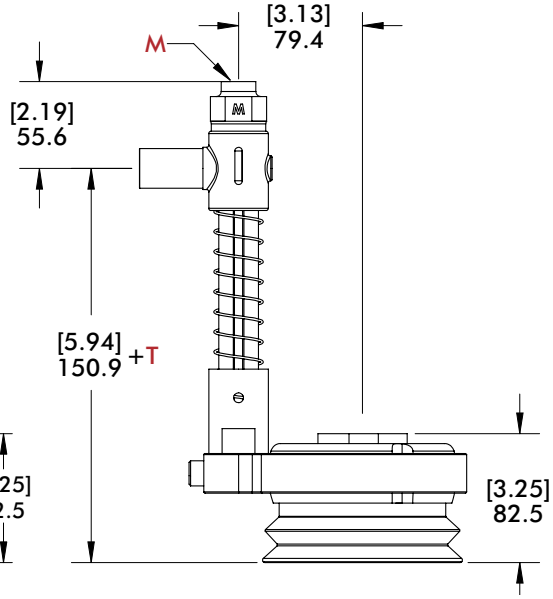

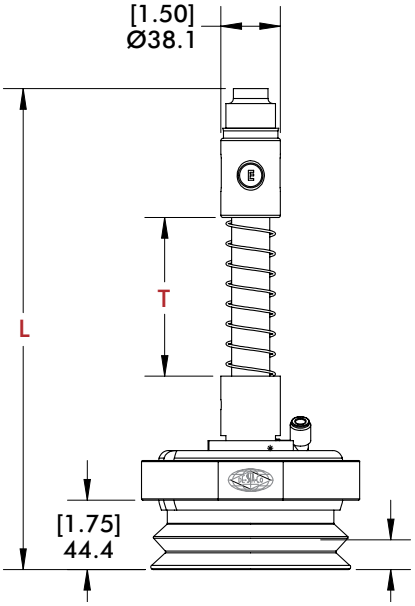

DBD Travel and Length - CPI-DBD-(**X**)-SCM(**X**)-(**T**)

Version	Vertical Travel (**T**)	(**L**)	(**M**)	Weight
Imperial 	200E (2.00")	257.1 [10.12]	3/8" NPT	.85kg [1.87 lb]
	400E (4.00")	307.9 [12.12]		.90kg [1.97 lb]
	600E (6.00")	358.7 [14.12]		.94kg [2.08 lb]
Metric 	050M (50mm)	257.1 [10.12]	3/8" G	.85kg [1.87 lb]
	100M (100mm)	307.9 [12.12]		.90kg [1.97 lb]
	150M (150mm)	358.7 [14.12]		.94kg [2.08 lb]

DESTACKER DOUBLE BLANK DETECTOR SPRING MOUNTS

Vacuum Products | Dimensions | Technical Specifications

DBD Heavy Duty (Double Pogo)





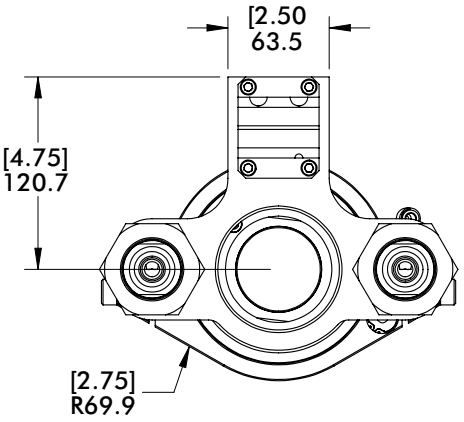

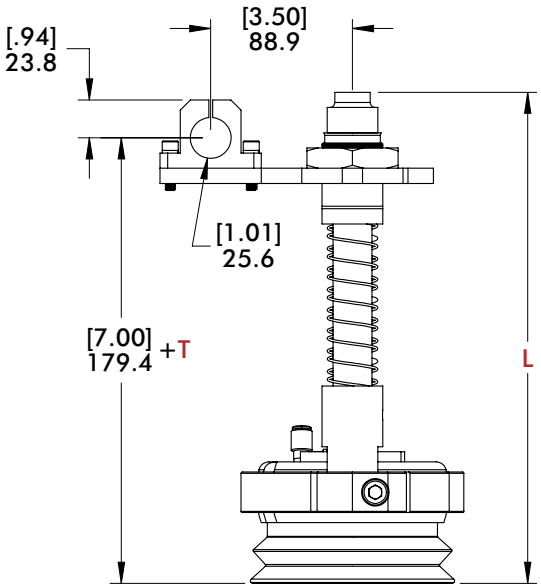

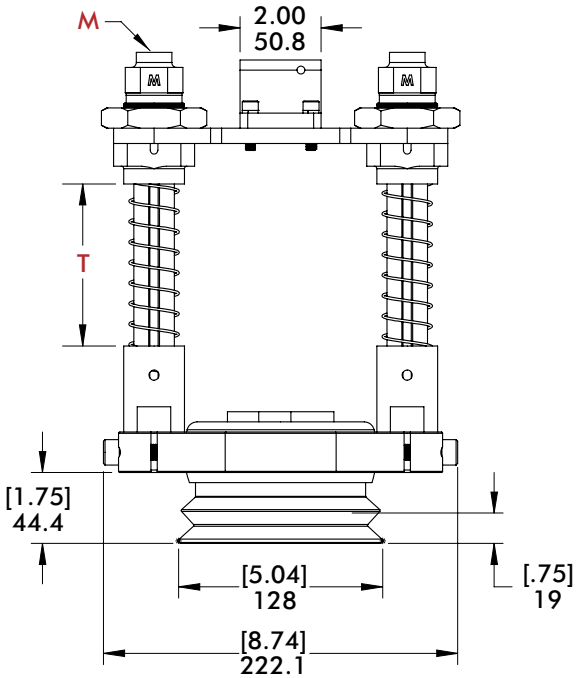

DBD Travel and Length - CPI-DBD-(**X**)-SCMB-(**T**)-**HD**

Version	Vertical Travel (**T**)	(**L**)	(**M**)	Weight
 Imperial	400E (4.00")	307.9 [12.12]		3.06kg [6.75 lb]
	600E (6.00")	357.9 [14.09]	3/8" NPT	3.16kg [6.97 lb]
	800E (8.00")	405.9 [15.98]		3.23kg [7.12 lb]
 Metric	100M (100mm)	307.9 [12.12]		3.06kg [6.75 lb]
	150M (150mm)	357.9 [14.09]	3/8" G	3.16kg [6.97 lb]
	200M (200mm)	405.9 [15.98]		3.23kg [7.12 lb]

Dimensions and technical information are subject to change without notice

BODYBUILDER™ DOUBLE BLANK DETECTOR SPRING MOUNTS

Vacuum Products | Dimensions | Technical Specifications

DBD Ø1.25"/40mm Tube Mount





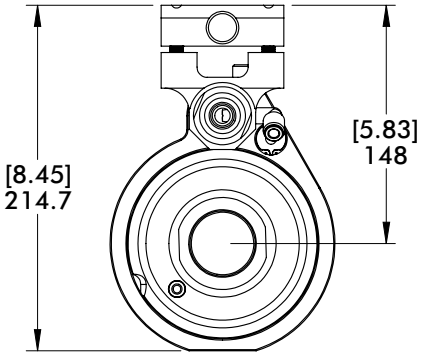

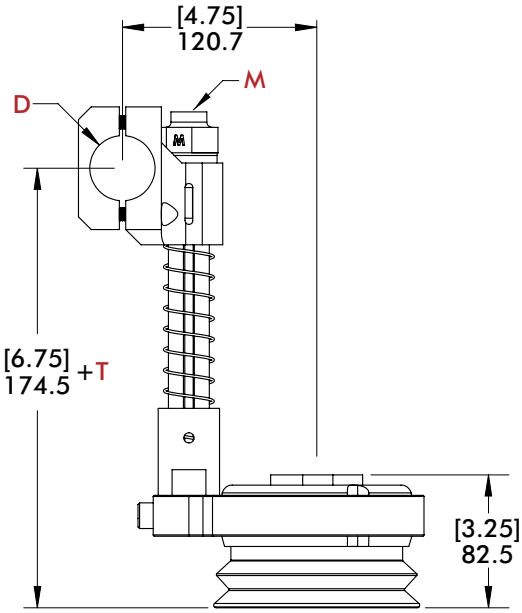

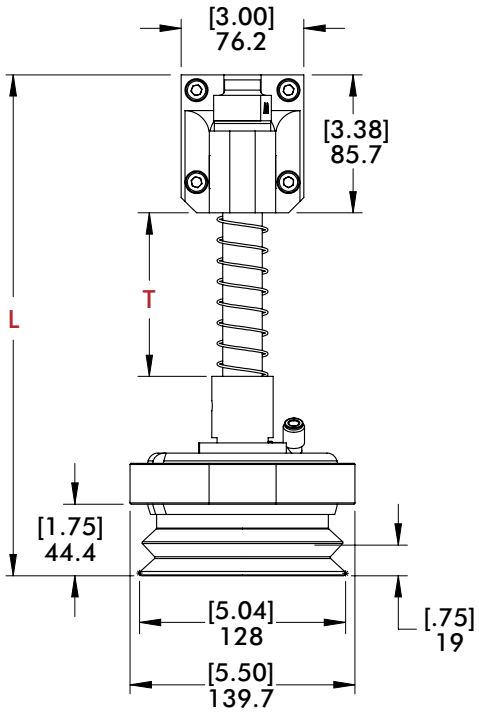

X=Sensor Size
42 Ø42mm
54 Ø54mm
(Sensors not Included)

DBD Travel and Length - CPI-DBD-(**X**)-(**T**)-SCM**C**-(**D**)

Version	Vertical Travel (T)	(L)	(M)	(D)	Weight
Imperial 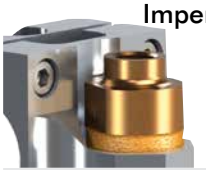	200E (2.00")	261.1 [10.28]	3/8" NPT	150 (Ø1.50")	.85kg [1.87 lb]
	400E (4.00")	311.1 [12.25]			.90kg [1.97 lb]
	600E (6.00")	369.9 [14.21]			.94kg [2.08 lb]
Metric 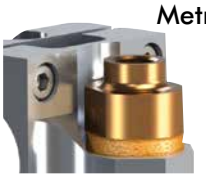	050M (50mm)	261.1 [10.28]	3/8" G	40M (Ø40mm)	.85kg [1.87 lb]
	100M (100mm)	311.1 [12.25]			.90kg [1.97 lb]
	150M (150mm)	369.9 [14.21]			.94kg [2.08 lb]

DESTACKER DOUBLE BLANK DETECTOR SPRING MOUNTS

Vacuum Products | Dimensions | Technical Specifications

DBD Ø45mm BodyBuilder Mount



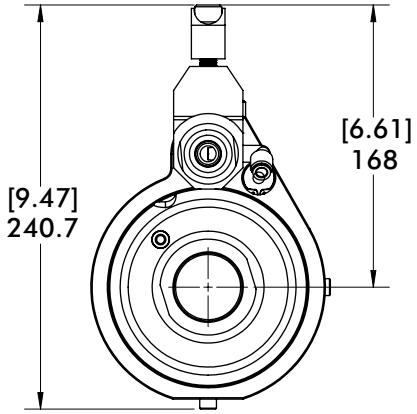

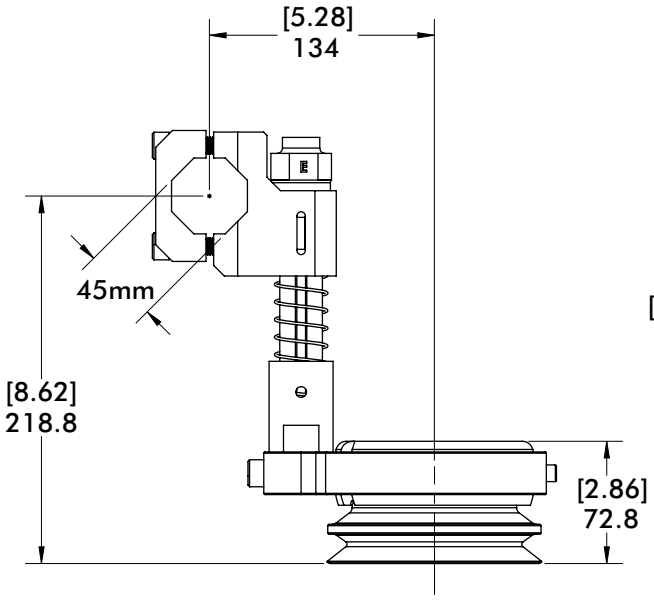

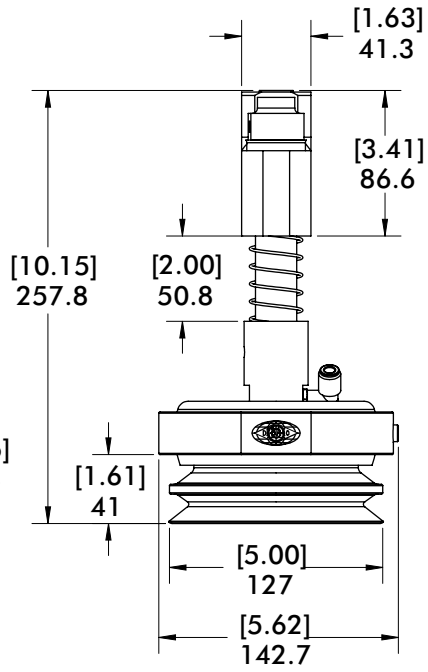

CPI-DBD-42-200E-SCM**S**-45B

Version	Thread	Weight
Imperial 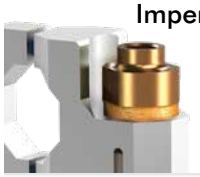	3/8" NPT	1.8kg [3.9 lb]

Notes

MANIFOLDS

Vacuum Products | Dimensions | Technical Specifications

MBC/MLK Boom Mounted Single 4-Port - 30° Angled Input Port

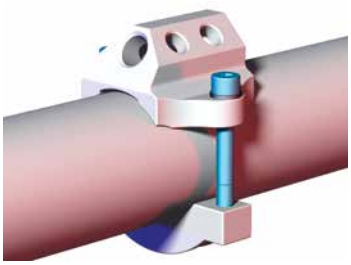

Features:
- 30° Angled input port.
- Provides a 4-port air distribution system mount on the boom.

Specifications:
Material: Aluminum



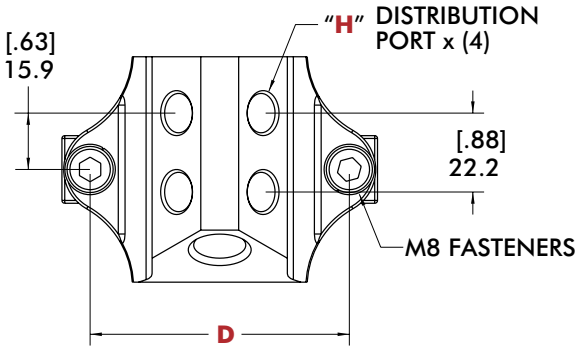

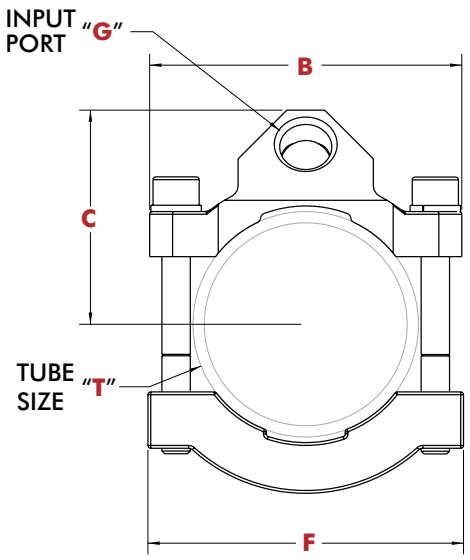

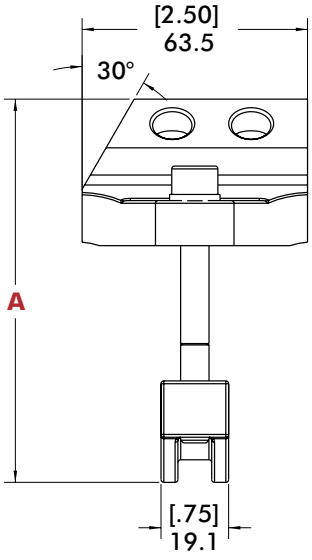

MBC/MLK Dimensions

Model	A	B	C	D	F	G	H	T	Weight
CPI-MLK-60-G44-30 [CPI-MBC-250-4-4-30]	108.0 [4.25]	87.9 [3.46]	60.3 [2.38]	73 [2.88]	88.9 [3.50]	3/8 G [3/8 NPT]	1/4 G [1/4 NPT]	Ø60MM [Ø2.50"]	340g [12 oz]

MBC/MLK Boom Mounted Single 4-Port

Specifications:
Material: Aluminum

Features:
- Provides a 4-port air distribution system mount on the boom.
- Available in two sizes to allow clamping to Ø40mm [Ø1.50"] and Ø60mm [Ø2.50"] materials.

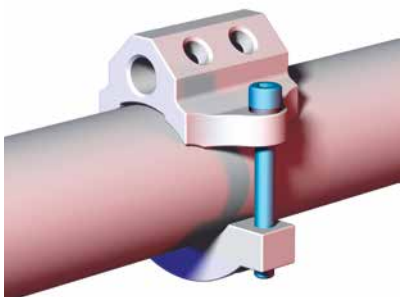

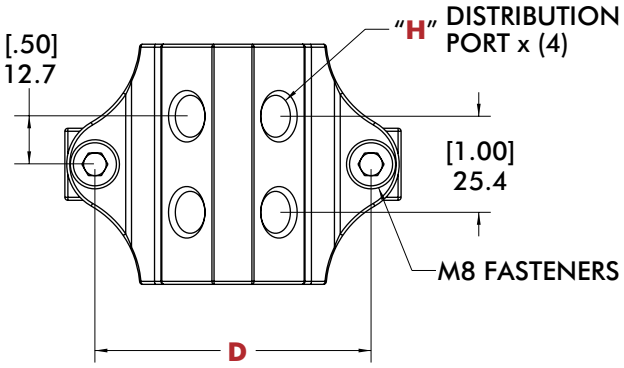

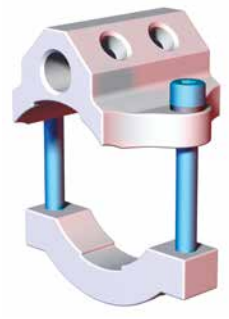

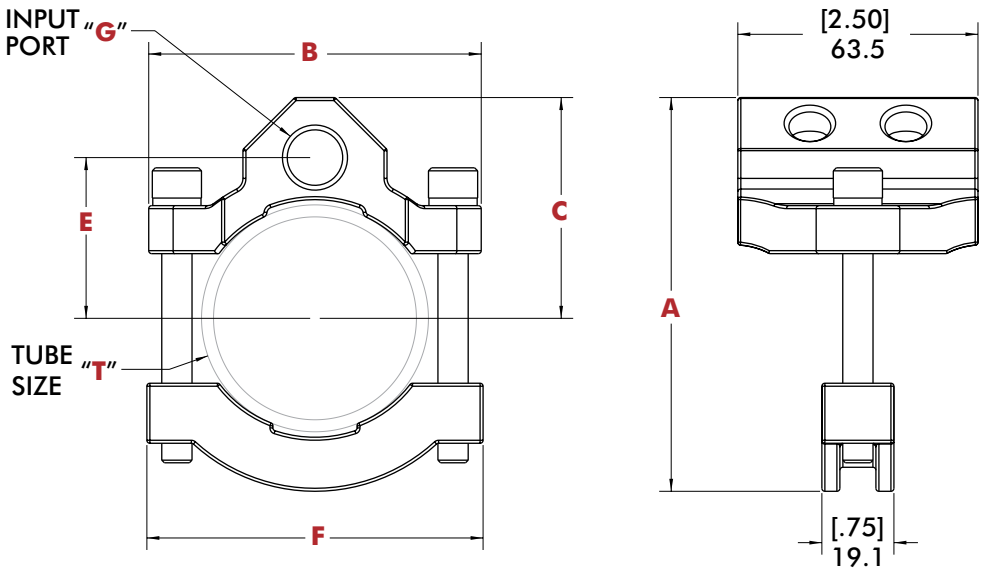

MBC/MLK Dimensions

Model	A	B	C	D	E	F	G	H	T	Weight
CPI-MLK-40-G44 [CPI-MBC-150-4-4]	88.9 [3.50]	64.3 [2.53]	52.5 [2.07]	48.5 [1.91]	36.7 [1.44]	64.3 [2.53]	12.9 [.51]	114.5 [4.51]	Ø40MM [Ø1.50"]	283g [10 oz]
CPI-MLK-60-G44 [CPI-MBC-250-4-4]	104.1 [4.10]	87.9 [3.46]	58.4 [2.30]	73 [2.88]	42.5 [1.67]	88.9 [3.50]	39.7 [1.56]	118.4 [4.65]	Ø60MM [Ø2.50"]	340g [12 oz]

MANIFOLDS

Vacuum Products | Dimensions | Technical Specifications

MBC/MLK Boom Mounted Double 8-Port

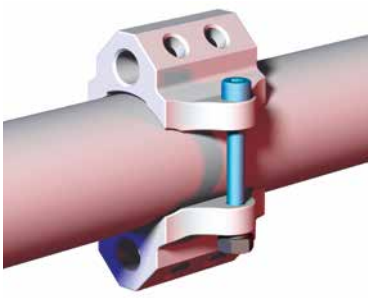

Features:

- Provides an 8-port (4 ports on top and bottom) air distribution system mount on the boom.
- Available in two sizes to allow clamping to Ø40mm [Ø1.50"] and Ø60mm [Ø2.50"] materials.

Specifications:

Material: Aluminum

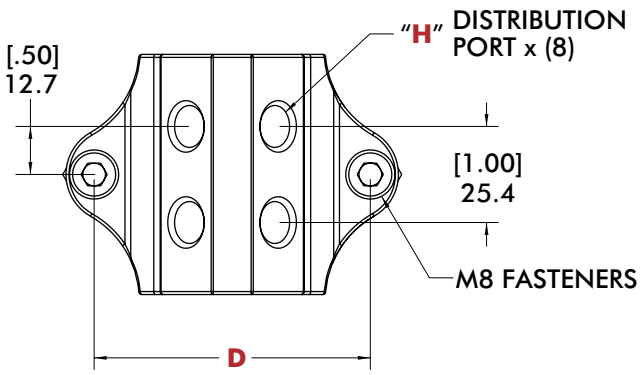

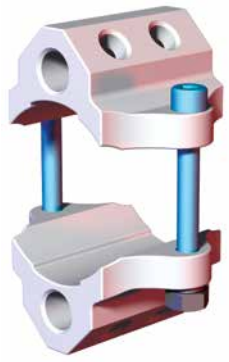

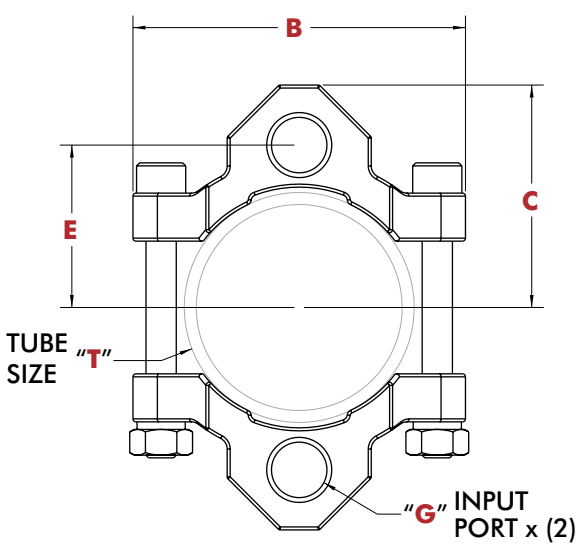

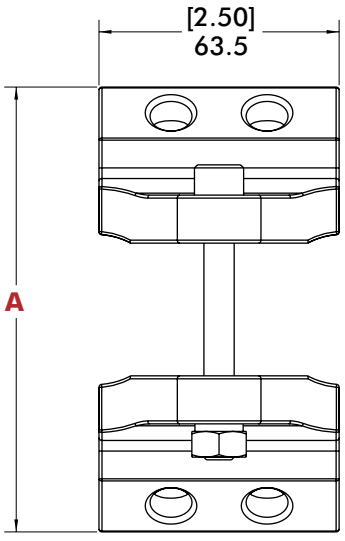

MBC/MLK Dimensions

Model	A	B	C	D	E	G	H	T	Weight
CPI-MLK-40-G88 [CPI-MBC-150-8-8]	105.1 [4.14]	64.3 [2.53]	52.5 [2.07]	48.5 [1.91]	36.8 [1.45]	3/8 G [3/8 NPT]	1/4 G [1/4 NPT]	Ø40MM [Ø1.50"]	425g [16 oz]
CPI-MLK-60-G88 [CPI-MBC-250-8-8]	117.6 [4.63]	87.9 [3.46]	58.8 [2.32]	73.0 [2.88]	42.9 [1.69]	3/8 G [3/8 NPT]	1/4 G [1/4 NPT]	Ø60MM [Ø2.50"]	510g [18 oz]

Dimensions and technical information are subject to change without notice

MBC Boom Mounted Single 6-Port

Specifications:
Material: Aluminum

Features:
- Provides a 6-port air distribution system mounted on the boom.
- Easy access.

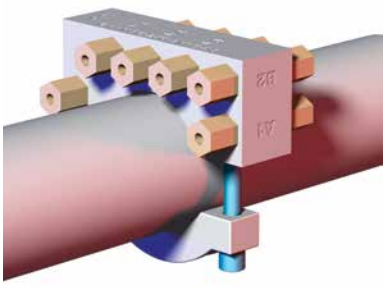

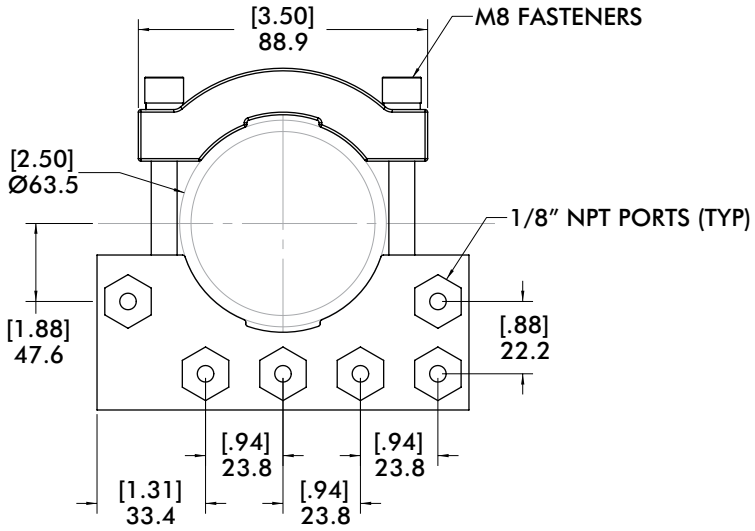

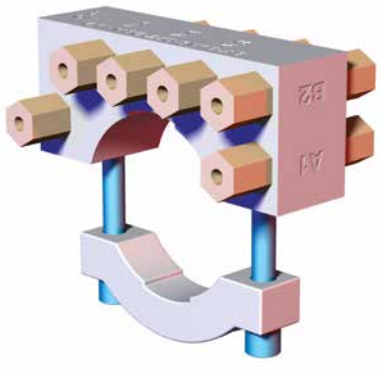

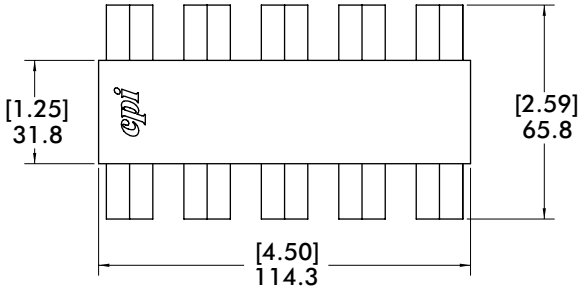

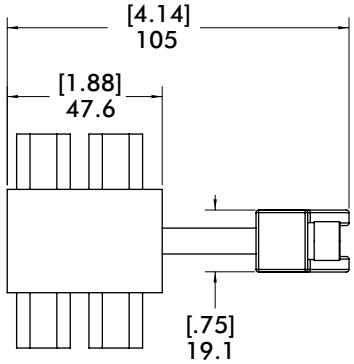

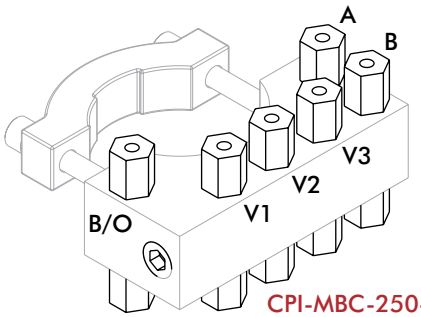

CPI-MBC-250-3V1B-AB

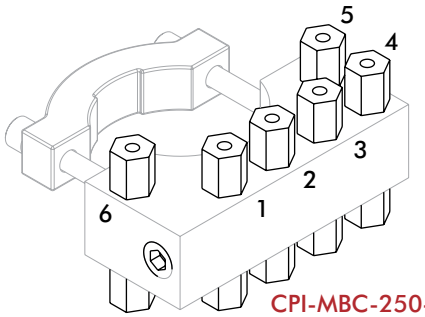

CPI-MBC-250-4V2B

MANIFOLDS

Vacuum Products | Dimensions | Technical Specifications

GDA/MBB Block Style for Remote Mounting



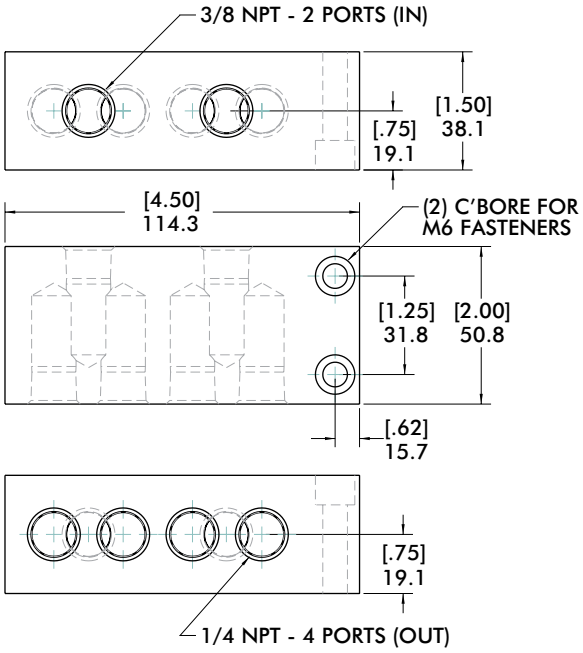

Material: Aluminum

Model	Weight
CPI-GDA-M24-37327	.23 kg [.56 lb]

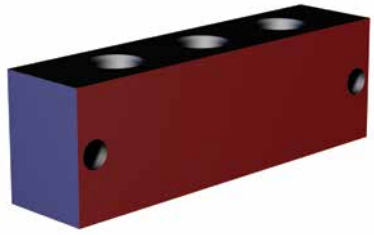

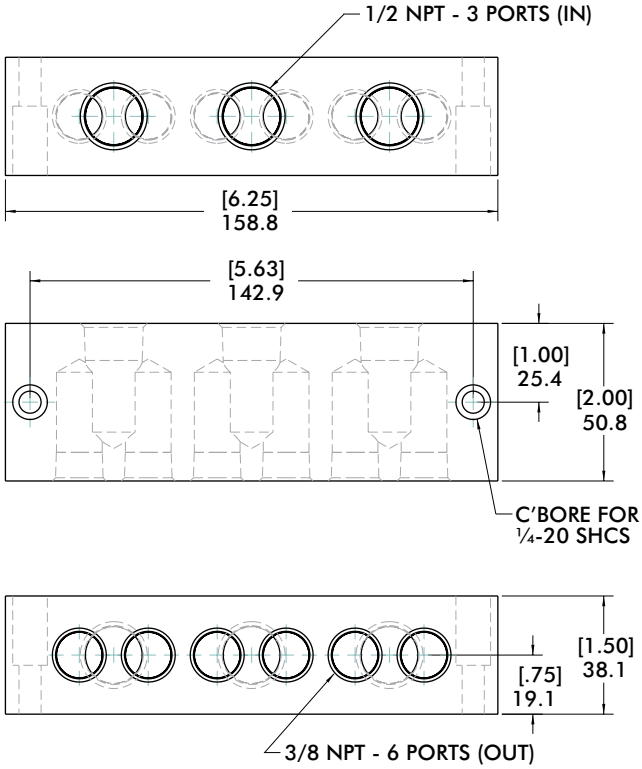

Material: Aluminum

Model	Weight
CPI-MMB-4V2B-LG	.23 kg [.56 lb]

MMB Block Style or Remote Mounting

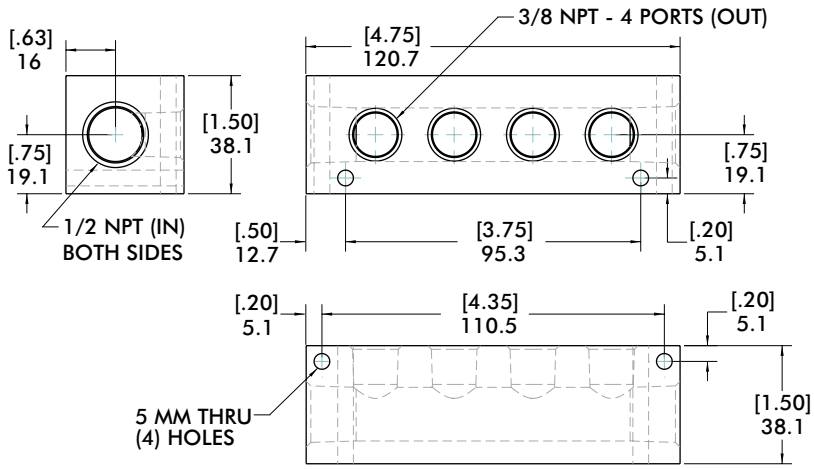

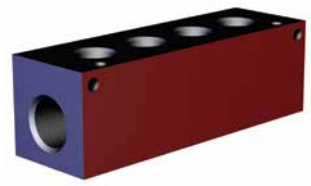

Material: Aluminum

Model	Weight
CPI-MMB-4P	.23 kg [.56 lb]

MMB Block Style or Remote Mounting

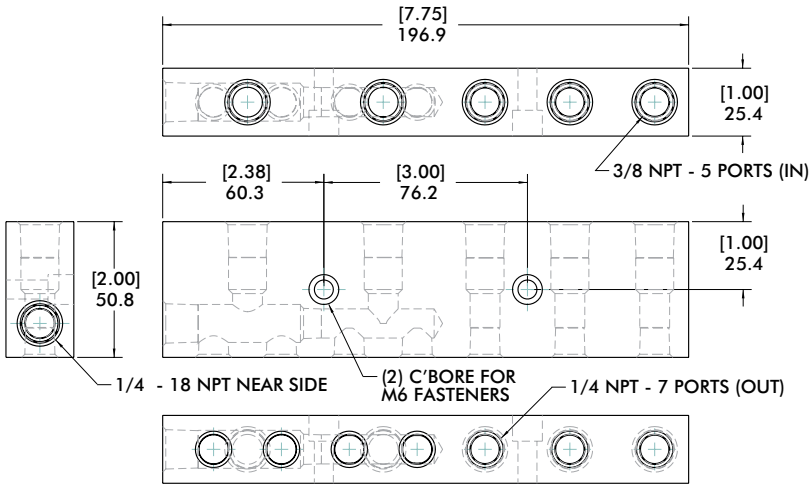

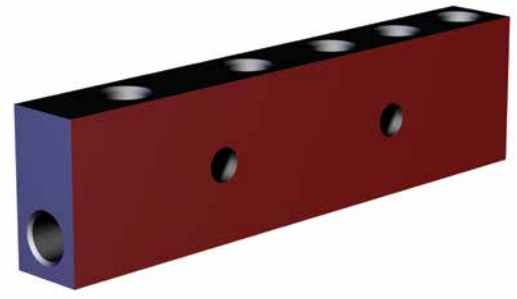

Material: Aluminum

Model	Weight
CPI-MMB-4VSP-AB	.23 kg [.56 lb]

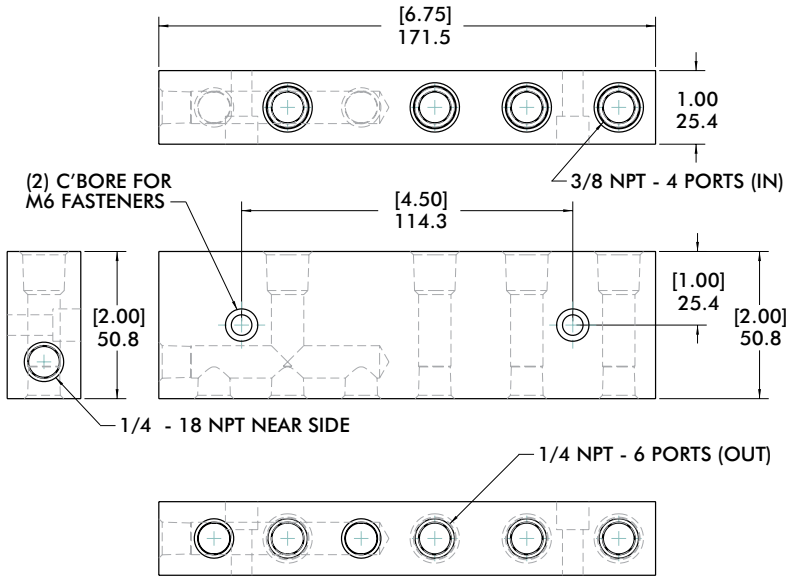



Material: Aluminum

Model	Weight
CPI-MMB-3V1B-AB	.23 kg [.56 lb]

BODYBUILDER™ TOOLING EXAMPLES

Table of Contents

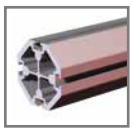
BodyBuilder™ Extruded Aluminum Octagonal Booms 5


BodyBuilder™ Structure Mid Mount Assemblies 11


BodyBuilder™ Structure End Mount Assemblies..... 28


BodyBuilder™ Transition Brackets and Blocks..... 32


BodyBuilder™ Low-Profile Transition Brackets 48


BodyBuilder™ Accessory Brackets and Mounts 66

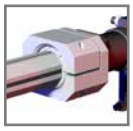
BodyBuilder™ Gripper Mounts 70


BodyBuilder™ Swivel Arm Mounts 73


BodyBuilder™ Swivel Arm Accessories 77

BODYBUILDER™ TOOLING EXAMPLES

BodyBuilder™ Octagonal Tooling | Typical Application Build Examples



Mid Mount with GR84 Series Mini-Clamps

Mid Mount with GR1 Series Gripper

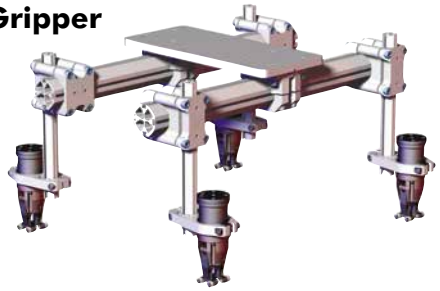

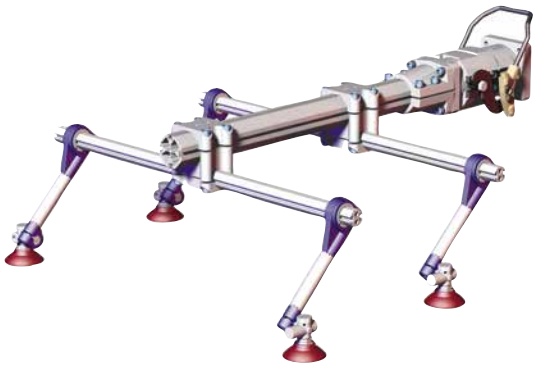

End Mount with Venturi Cup Mounts and Vacuum Cups



End Mount with GR84 Series Mini Clamp

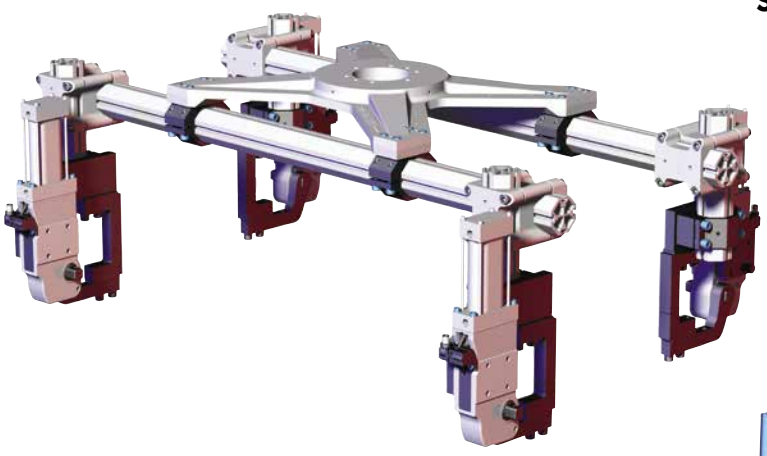

Mid Mount with 82M50 Enclosed Power Clamps

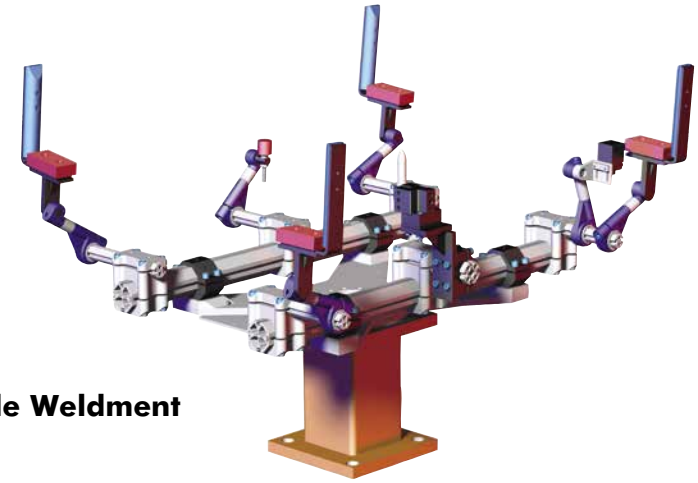

Mid Mounted Part Nest with CPI-HTW Hold Table Weldment and Nest Pad guides

BODYBUILDER™ END EFFECTOR SYSTEM

Product Overview

BodyBuilder™ is designed to maximize productivity, both before and after installation. The flexibility of the system allows modifications to the end effector in minutes, greatly reducing start up time to launch.

The octagonal structure is available in four sizes: 30mm, 45mm, 60mm, and 90mm.

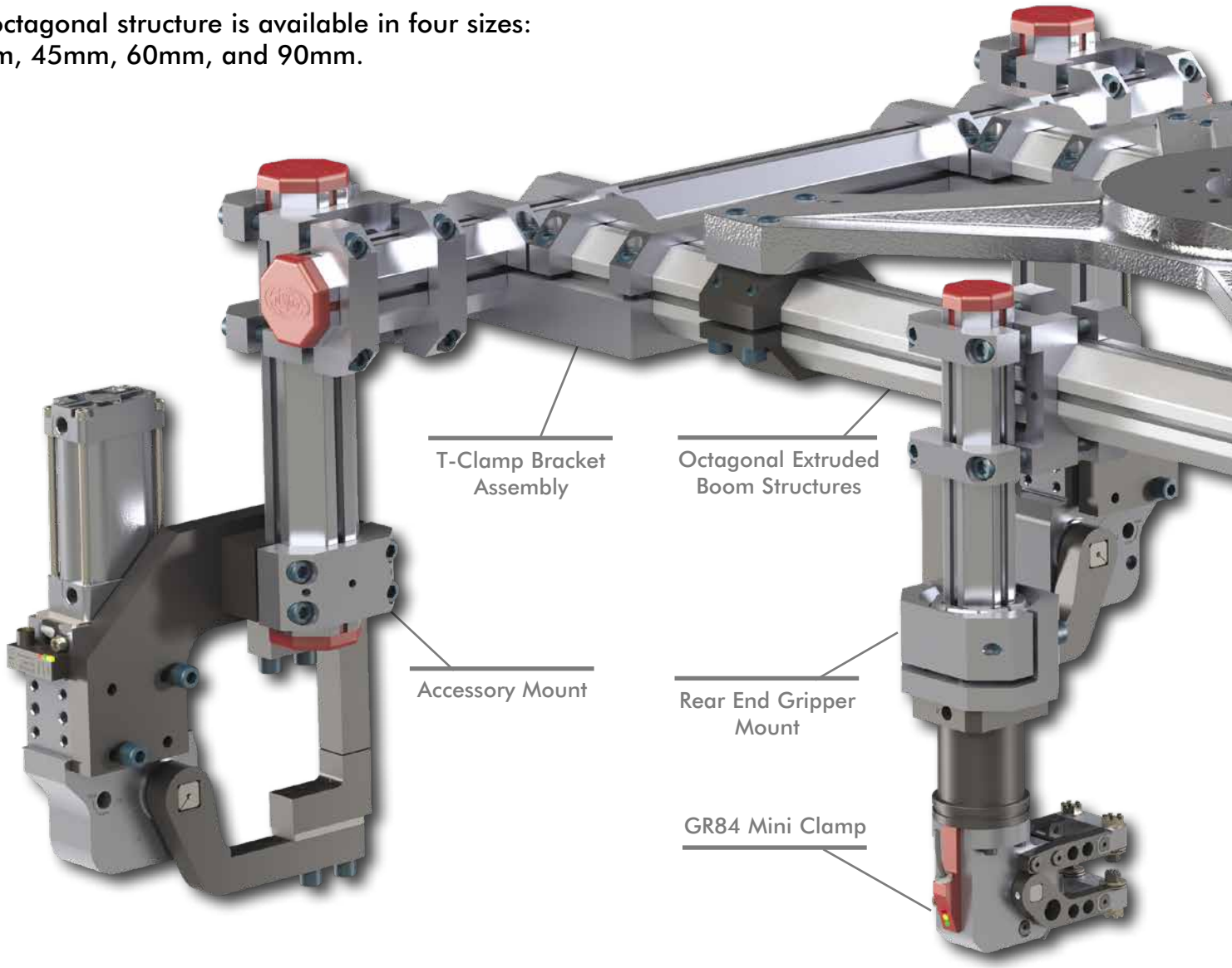

The patented BodyBuilder™ Alignment System allows the modular components to be replaced individually and easily returned to their original positions.

Alignment nut(s) are included with every Bodybuilder™ modular component, utilizing the patented alignment system.

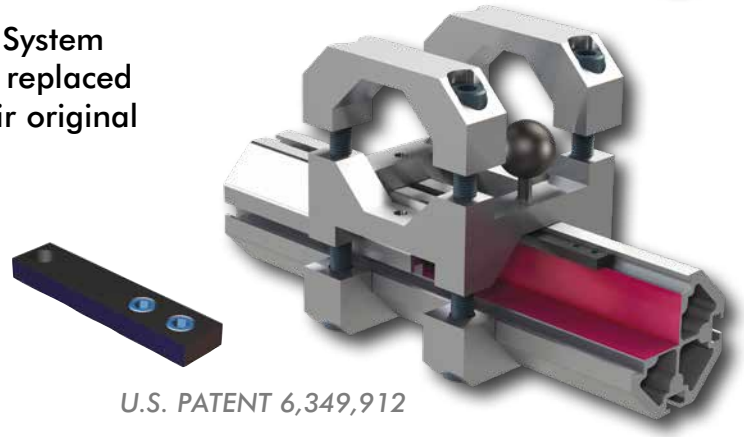

U.S. PATENT 6,349,912

Dimensions and technical information are subject to change without notice

BODYBUILDER™ END EFFECTOR SYSTEM

Product Overview

Most commonly used in:	
Applications	**Markets**
Robot Welding	Industrial
Pick and Place	Automotive
Material Handling	Transportation
Lower Nest	Appliance

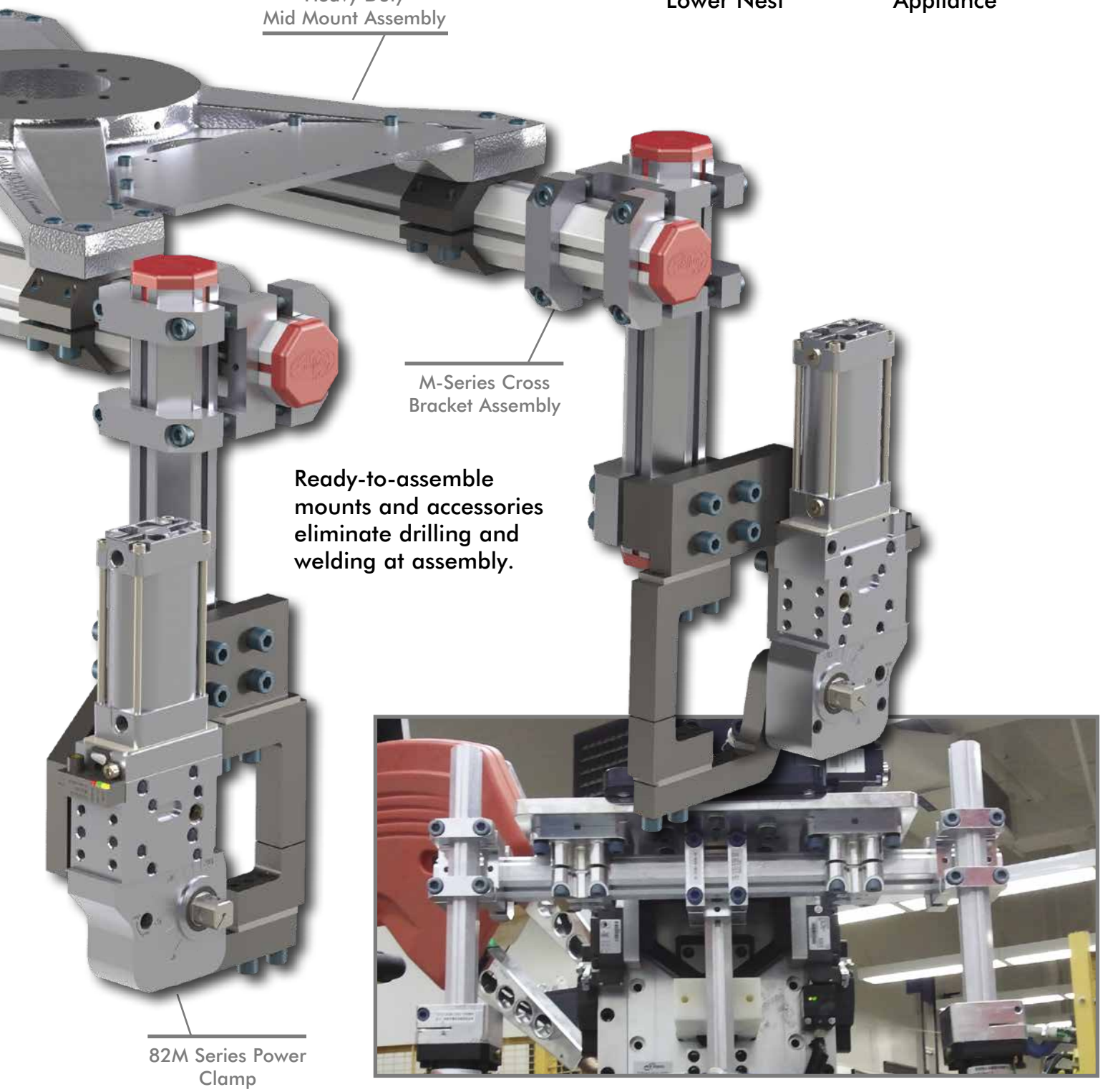

Ready-to-assemble mounts and accessories eliminate drilling and welding at assembly.

BODYBUILDER™ BOOM STRUCTURE

BodyBuilder™ Octagonal Tooling | Dimensions

30, 45, 60, and 90mm Boom Lengths and Ordering Numbers

BODYBUILDER™ OCTAGONAL ALUMINUM BOOM LENGTHS & ORDER NUMBERS	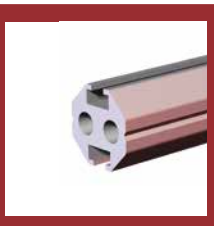	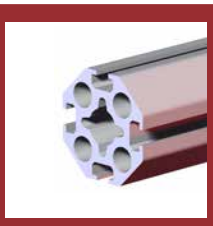	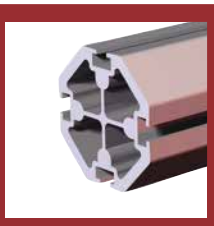	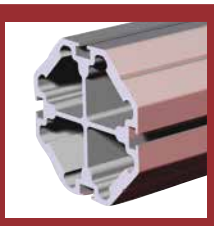
(L) Length	**B - 30 - (L) - 0**	**B - 45 - (L) - 0**	**B - 60 - (L) - 0**	**B - 90 - (L) - 0**
150 mm	B - 30 - 150 - 0	B - 45 - 150 - 0	B - 60 - 150 - 0	N/A
200 mm	B - 30 - 200 - 0	B - 45 - 200 - 0	B - 60 - 200 - 0	N/A
250 mm	B - 30 - 250 - 0	B - 45 - 250 - 0	B - 60 - 250 - 0	N/A
300 mm	B - 30 - 300 - 0	B - 45 - 300 - 0	B - 60 - 300 - 0	B - 90 - 300 - 0
400 mm	B - 30 - 400 - 0	B - 45 - 400 - 0	B - 60 - 400 - 0	B - 90 - 400 - 0
500 mm	B - 30 - 500 - 0	B - 45 - 500 - 0	B - 60 - 500 - 0	B - 90 - 500 - 0
600 mm	B - 30 - 600 - 0	B - 45 - 600 - 0	B - 60 - 600 - 0	B - 90 - 600 - 0
700 mm	B - 30 - 700 - 0	B - 45 - 700 - 0	B - 60 - 700 - 0	B - 90 - 700 - 0
750 mm	B - 30 - 750 - 0	B - 45 - 750 - 0	B - 60 - 750 - 0	B - 90 - 750 - 0
800 mm	B - 30 - 800 - 0	B - 45 - 800 - 0	B - 60 - 800 - 0	B - 90 - 800 - 0
900 mm	B - 30 - 900 - 0	B - 45 - 900 - 0	B - 60 - 900 - 0	B - 90 - 900 - 0
1200 mm	B - 30 - 1200 - 0	B - 45 - 1200 - 0	B - 60 - 1200 - 0	B - 90 - 1200 - 0
1500 mm	B - 30 - 1500 - 0	B - 45 - 1500 - 0	B - 60 - 1500 - 0	B - 90 - 1500 - 0
1800 mm	B - 30 - 1800 - 0	B - 45 - 1800 - 0	B - 60 - 1800 - 0	B - 90 - 1800 - 0
2100 mm	B - 30 - 2100 - 0	B - 45 - 2100 - 0	B - 60 - 2100 - 0	B - 90 - 2100 - 0
2400 mm	B - 30 - 2400 - 0	B - 45 - 2400 - 0	B - 60 - 2400 - 0	B - 90 - 2400 - 0
2700 mm	B - 30 - 2700 - 0	B - 45 - 2700 - 0	B - 60 - 2700 - 0	B - 90 - 2700 - 0
3000 mm	B - 30 - 3000 - 0	B - 45 - 3000 - 0	B - 60 - 3000 - 0	B - 90 - 3000 - 0

30mm Boom Profile Dimensions and Specifications

BodyBuilder™ 30mm Boom

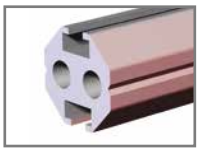

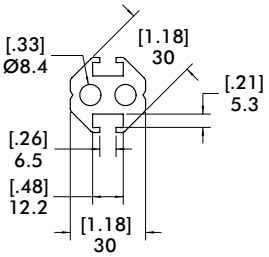



Model Number	Weight
B - 30 - (L) - 0	1.4 kg/m [0.9 lb/ft]

Dimensions and technical information are subject to change without notice

BODYBUILDER™ BOOM STRUCTURE

BodyBuilder™ Octagonal Tooling | Dimensions

45, 60, and 90mm Boom Profile Dimensions and Specifications

BodyBuilder™ 45mm Boom

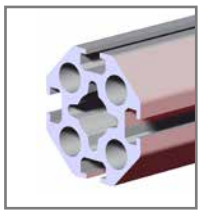

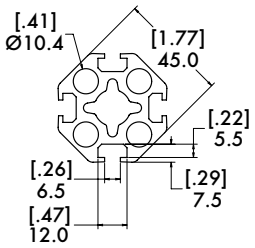

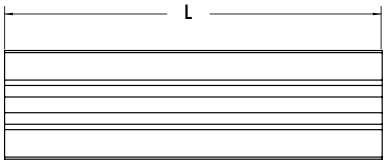

Model Number	Weight
B - 45 - (L) - 0	2.0 kg/m [1.4 lb/ft]

BodyBuilder™ 60mm Boom

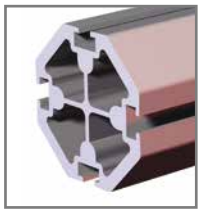

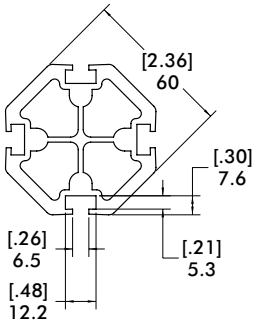

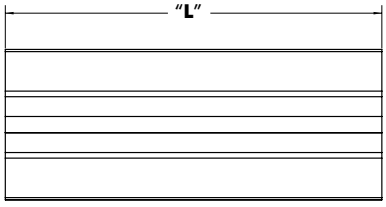

Model Number	Weight
B - 60 - (L) - 0	3.3 kg/m [2.2 lb/ft]

BodyBuilder™ 90mm Boom

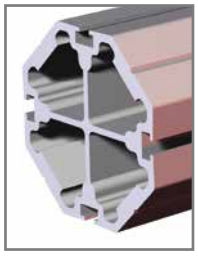

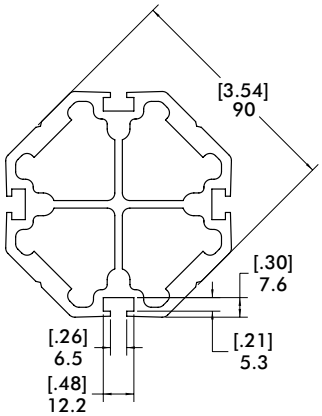

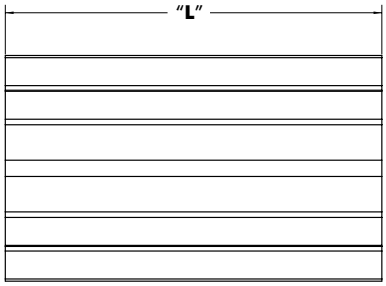

Model Number	Weight
B - 90 - (L) - 0	6.5 kg/m [4.4 lb/ft]

BODYBUILDER™ BOOM STRUCTURE

BodyBuilder™ Octagonal Tooling | Technical Specifications

30mm Boom Deflection and Torsion Charts

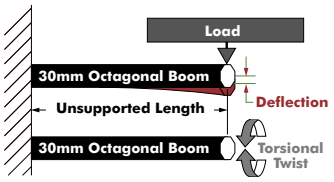

5 Kgf	11.0 lbf
10 Kgf	22.0 lbf
15 Kgf	33.0 lbf

100 Kgf-cm	86.8 lbf-in
200 Kgf-cm	173.6 lbf-in
300 Kgf-cm	260.4 lbf-in
400 Kgf-cm	347.2 lbf-in
800 Kgf-cm	694.4 lbf-in
1300 Kgf-cm	1128.4 lbf-in

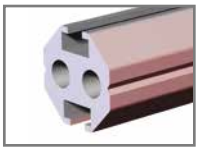

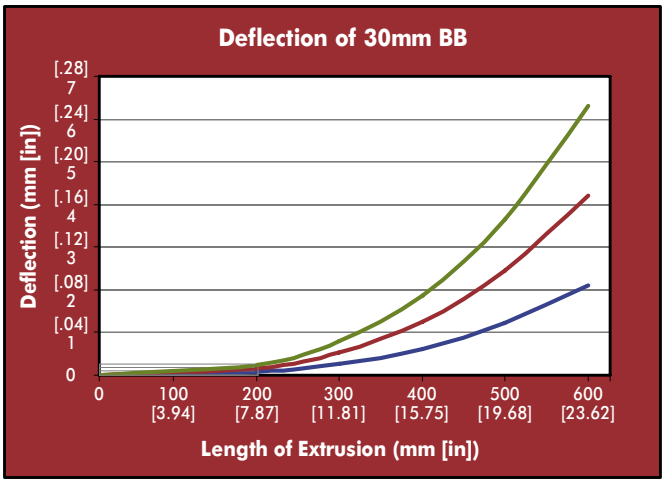

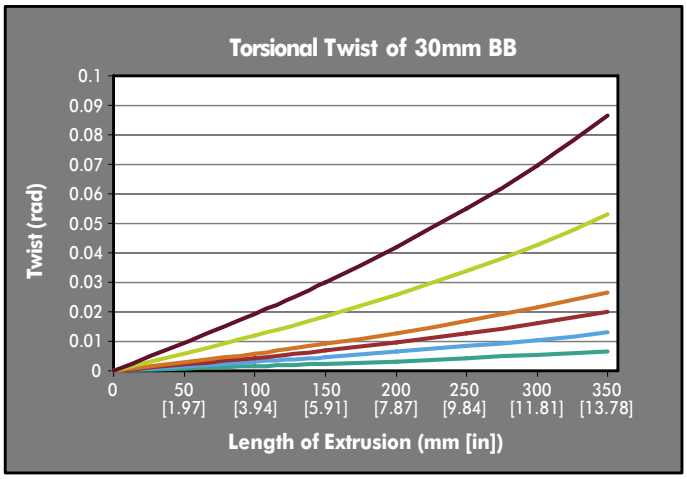

45mm Boom Deflection and Torsion Charts

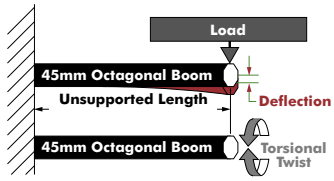

5 Kgf	11.0 lbf
10 Kgf	22.0 lbf
20 Kgf	44.1 lbf
30 Kgf	66.1 lbf
40 Kgf	88.2 lbf

400 Kgf-cm	347.2 lbf-in
700 Kgf-cm	607.6 lbf-in
1000 Kgf-cm	867.0 lbf-in
1300 Kgf-cm	1128.4 lbf-in
1600 Kgf-cm	1388.7 lbf-in
2000 Kgf-cm	1735.9 lbf-in
3000 Kgf-cm	2603.9 lbf-in



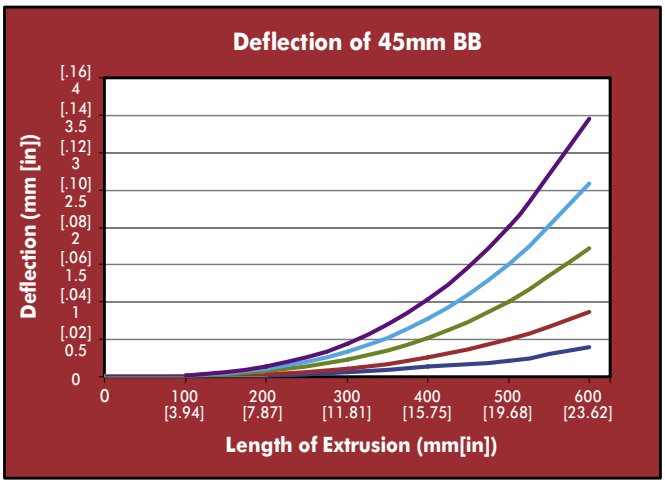

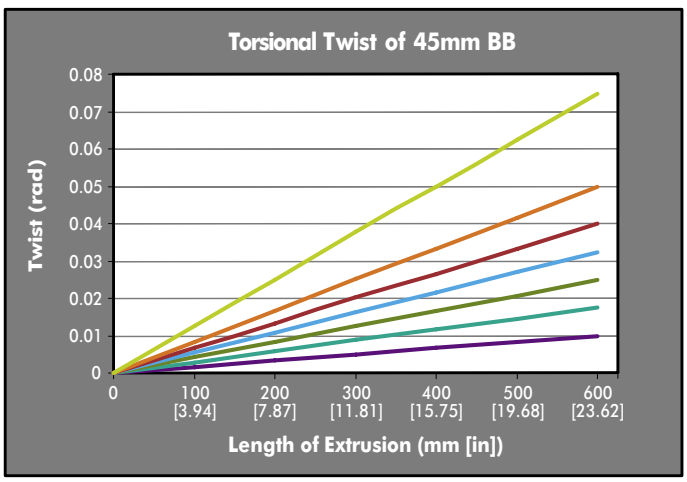

Note: Performance may vary if used with non-DESTACO components

BODYBUILDER™ BOOM STRUCTURE

BodyBuilder™ Octagonal Tooling | Technical Specifications

60mm Boom Deflection and Torsion Charts

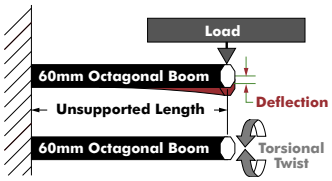

5 Kgf	11.0 lbf
10 Kgf	22.0 lbf
20 Kgf	44.1 lbf
30 Kgf	66.1 lbf
40 Kgf	88.2 lbf
50 Kgf	110.2 lbf

400 Kgf-cm	347.2 lbf-in
800 Kgf-cm	694.4 lbf-in
1200 Kgf-cm	1041.6 lbf-in
1600 Kgf-cm	1388.7 lbf-in
2000 Kgf-cm	1735.9 lbf-in
2400 Kgf-cm	2083.1 lbf-in
2800 Kgf-cm	2430.3 lbf-in
3400 Kgf-cm	2951.1 lbf-in
4000 Kgf-cm	3471.8 lbf-in

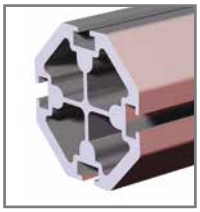

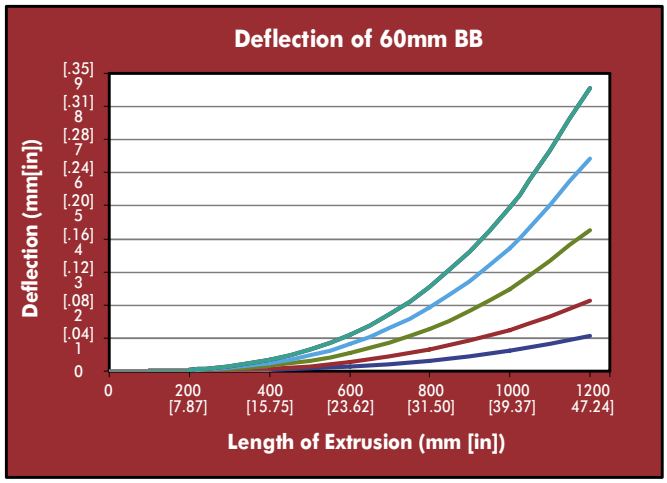

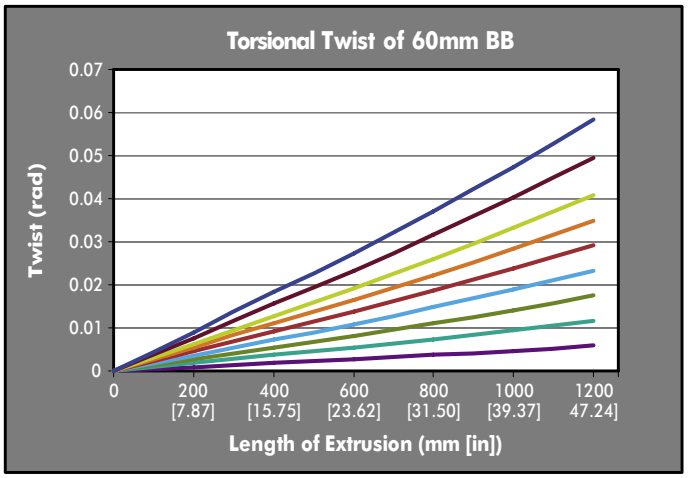

90mm Boom Deflection and Torsion Charts

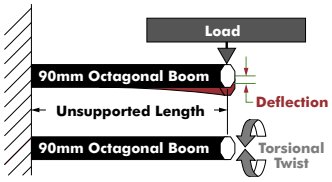

10 Kgf	22.0 lbf
20 Kgf	44.1 lbf
30 Kgf	66.1 lbf
40 Kgf	88.2 lbf
50 Kgf	110.2 lbf
60 Kgf	132.3 lbf

1000 Kgf-cm	867.0 lbf-in
2000 Kgf-cm	1735.9 lbf-in
3000 Kgf-cm	2603.9 lbf-in
4000 Kgf-cm	3471.8 lbf-in
5000 Kgf-cm	4339.8 lbf-in
6000 Kgf-cm	5207.8 lbf-in
8000 Kgf-cm	6943.7 lbf-in

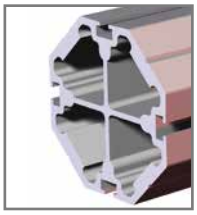

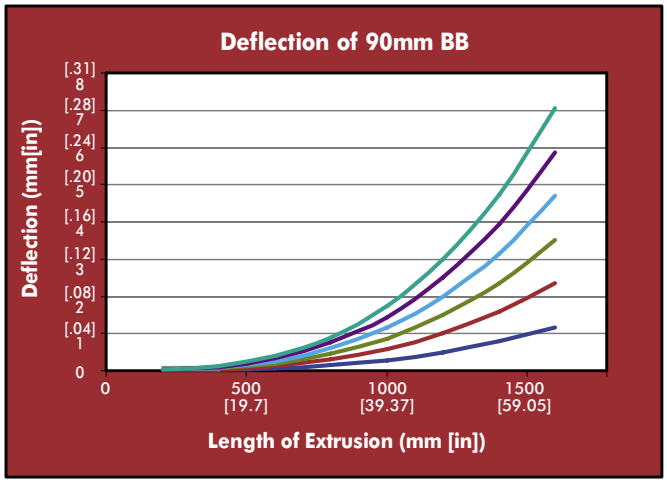

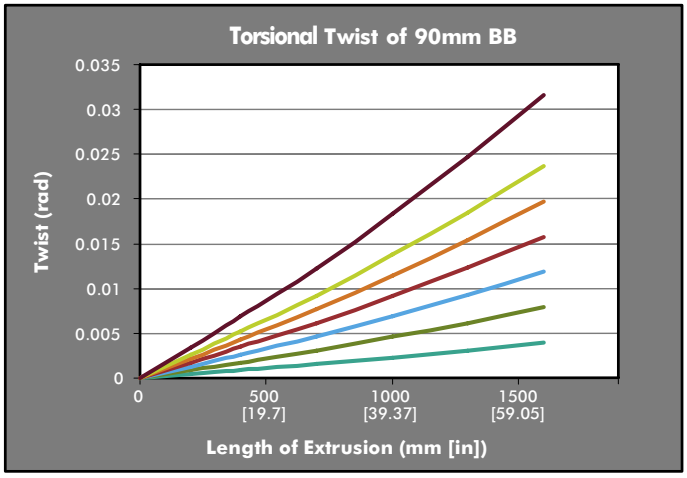

Note: Performance may vary if used with non-DESTACO components

BODYBUILDER™ BOOM STRUCTURE ACCESSORIES

BodyBuilder™ Octagonal Tooling | Dimensions | Technical Specifications

ETP-35 Extrusion Accessory Mount



Specifications:
Material: Aluminum

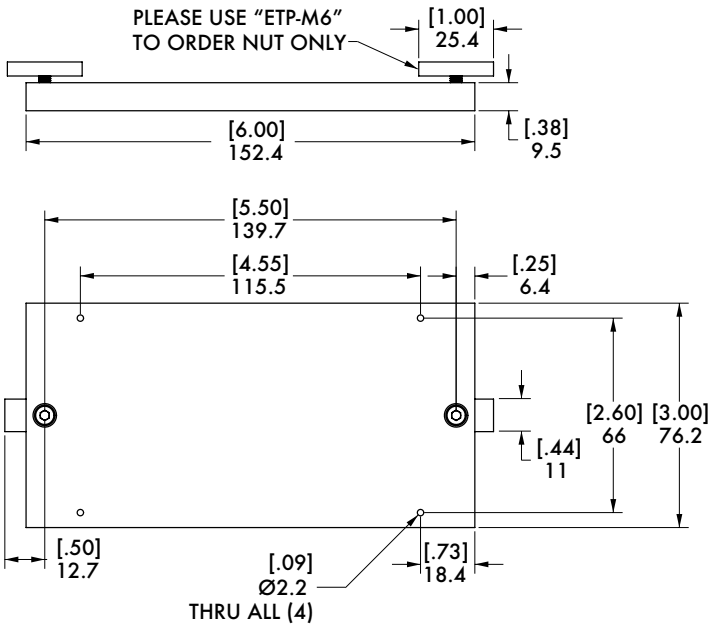



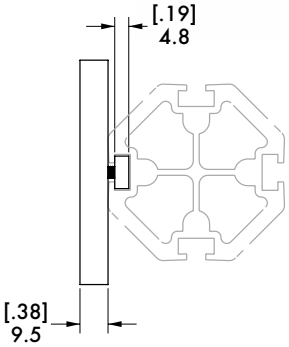

Model Number	Weight
CPI-ETP-35	.31 kg [.68 lb]

EC-60 60mm Bodybuilder Octagonal Boom End Cap

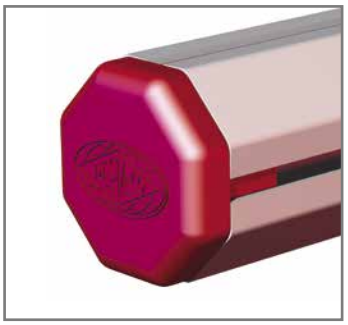

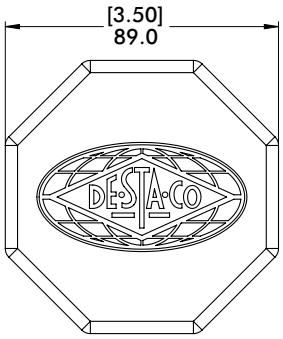

End Cap

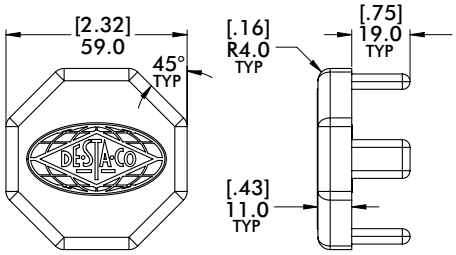

60mm End Cap



45mm End Cap



Model Number	Weight
CPI-EC-45B	.02 kg [.05 lb]
CPI-EC-60B	.04 kg [.09 lb]
CPI-EC-90B	.09 kg [.20 lb]

Dimensions and technical information are subject to change without notice

RMM-30B-40BC-08-90 Single Extrusion 30mm Mid Mount with 40mm Bolt Circle



Specifications:
Max. Static Product Load:
102 Nm [75 ft-lb]
Material: Aluminum

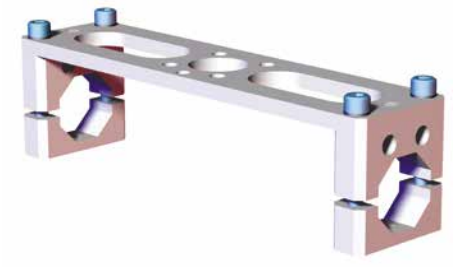

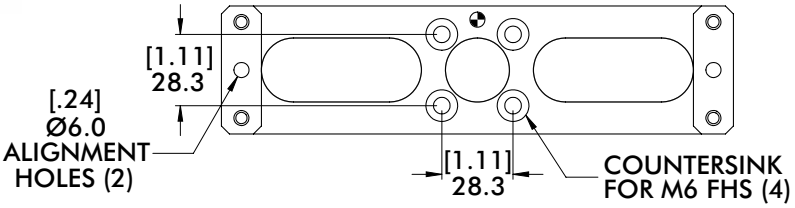

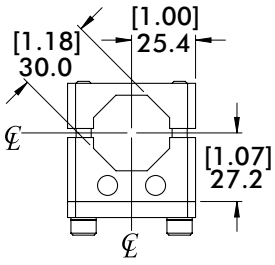

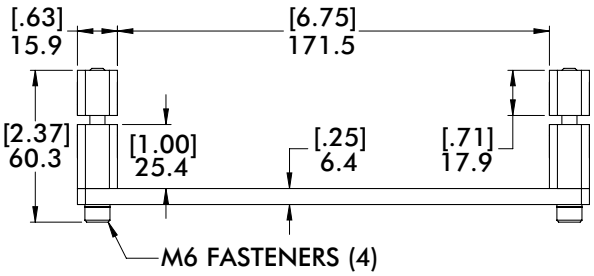

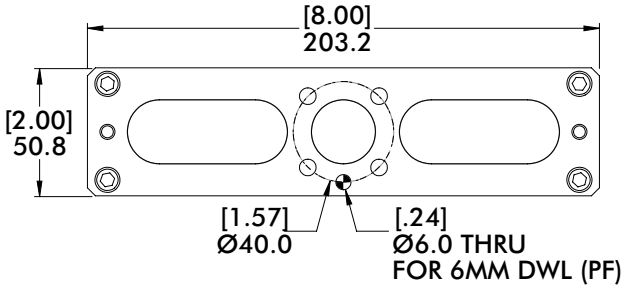

Model Number	Weight
CPI-RMM-30B-40BC-08-90	.28 kg [.62 lb]

BODYBUILDER™ MID-MOUNT ASSEMBLIES

BodyBuilder™ Octagonal Tooling | Dimensions | Technical Specifications

RMM-30B-SE Single Extrusion 60mm Robot Adaptor Mid Mount

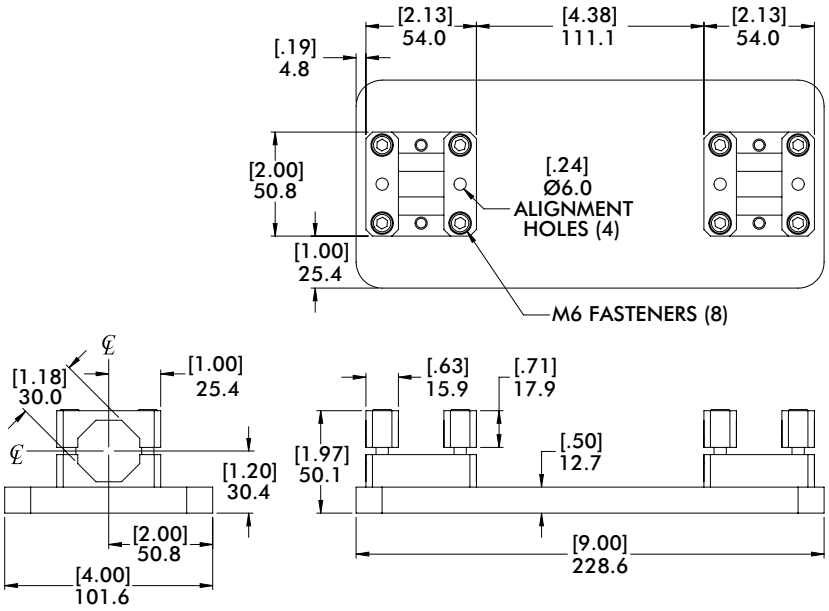

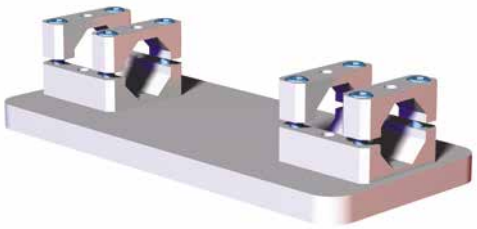

Specifications:
Max. Static Product Load:
102 Nm [75 ft-lb] Material:
Aluminum

Model Number	Weight
CPI-RMM-30B-SE	1.05 kg [2.31 lb]

RMM-30B-DE Double Extrusion 30mm Robot Adaptor Mid Mount

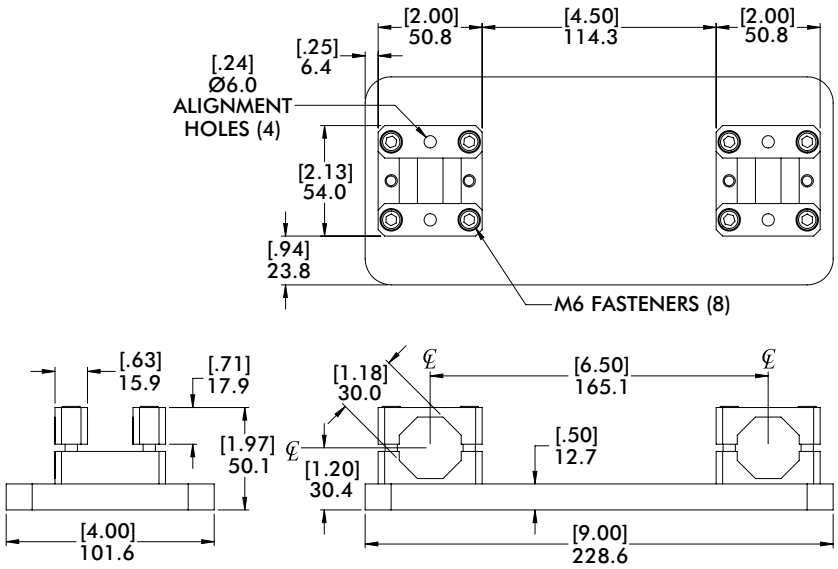

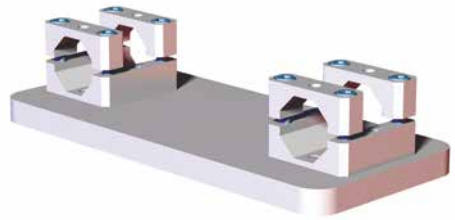

Specifications:
Max. Static Product Load:
102 Nm [75 ft-lb] Material:
Aluminum

Model Number	Weight
CPI-RMM-30B-DE	1.05 kg [2.31 lb]

Dimensions and technical information are subject to change without notice

BODYBUILDER™ MID MOUNT ASSEMBLIES

BodyBuilder™ Octagonal Tooling | Dimensions | Technical Specifications

BM1-45-SE Single Extrusion 45mm Mid Mount

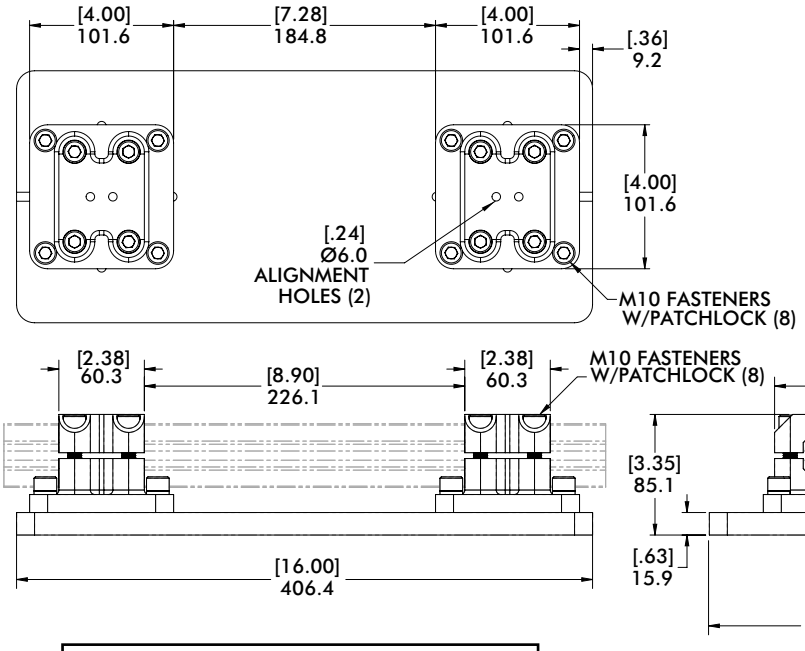

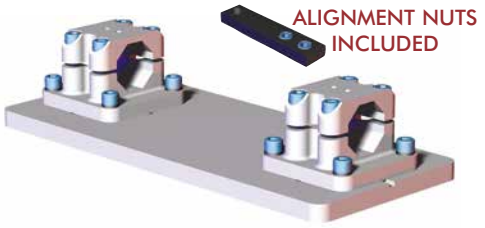

BM1-45 – **SE** – **RXX**

- **BM1-45** — **MODEL**
- **SE** — **BOOM SETUP** (SINGLE)
- **RXX** — **ROBOT INTERFACE PATTERN** (PAGE 19-21)

Specifications:
Max. Static Product Load:
350 Nm [258 ft-lb]
Material: Aluminum

Weight
5.05 kg [11.1 lb]

Can be supplied with robot interface hole patterns. (See pages 19-21).

BM1-45-DE Double Extrusion 45mm Mid Mount

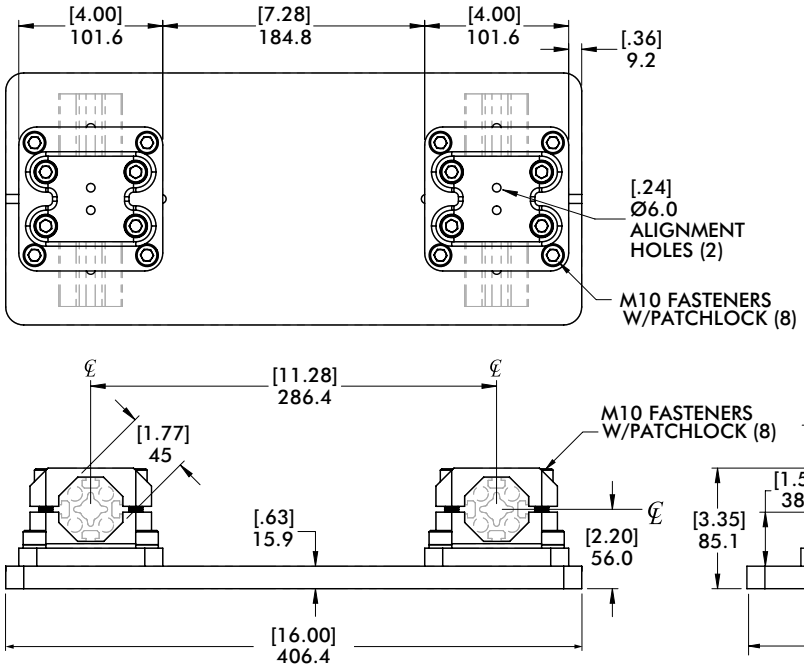

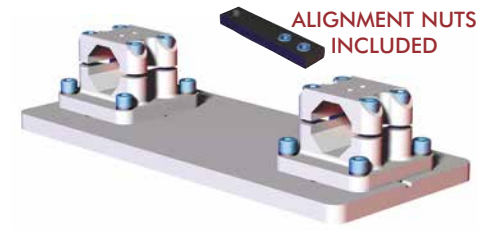

BM1-45 – **DE** – **RXX**

- **BM1-45** — MODEL
- **DE** — BOOM SETUP (DOUBLE)
- **RXX** — ROBOT INTERFACE PATTERN (PAGE 19-21)

Specifications:
Max. Static Product Load:
350 Nm [258 ft-lb]
Material: Aluminum

Weight
5.05 kg [11.1 lb]

Can be supplied with robot interface hole patterns. (See pages 19-21).

BODYBUILDER™ MID MOUNT ASSEMBLIES

BodyBuilder™ Octagonal Tooling | Dimensions | Technical Specifications

BM1-60-SE 60mm Single Extrusion Mid Mount Assembly

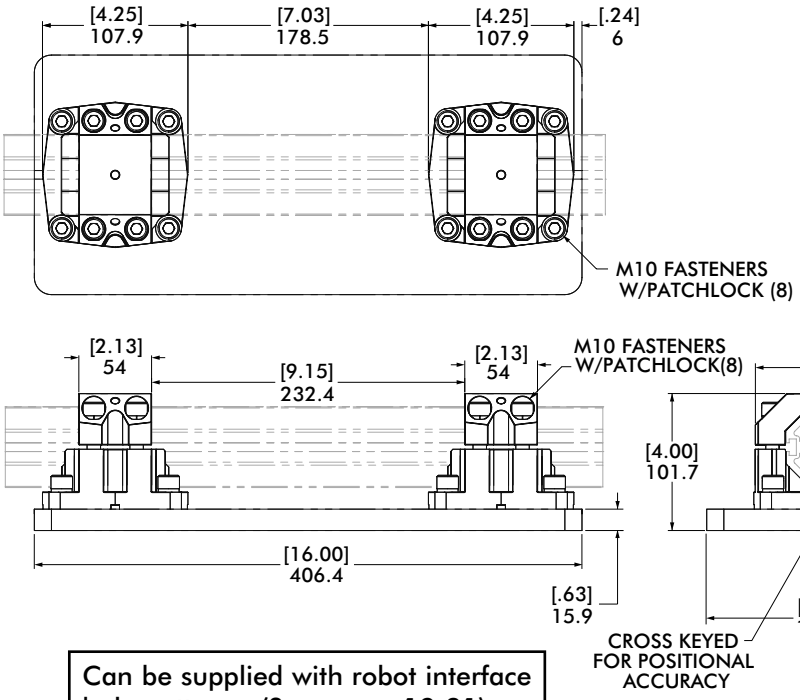

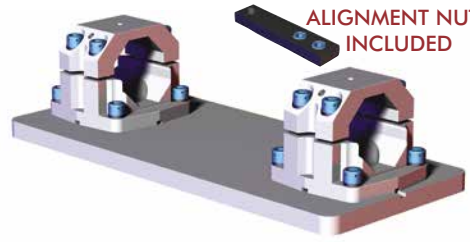

BM1-60 – **SE** – **RXX**

- BM1-60: MODEL
- SE: BOOM SETUP (SINGLE)
- RXX: ROBOT INTERFACE PATTERN (PAGE 19-21)

Can be supplied with robot interface hole patterns. (See pages 19-21).

Specifications:
Max. Static Product Load:
675 Nm [500 ft-lb]
Material: Aluminum

Weight
5.2 kg [11.5 lb]

BM1-60-DE 60mm Double Extrusion Mid Mount Assembly

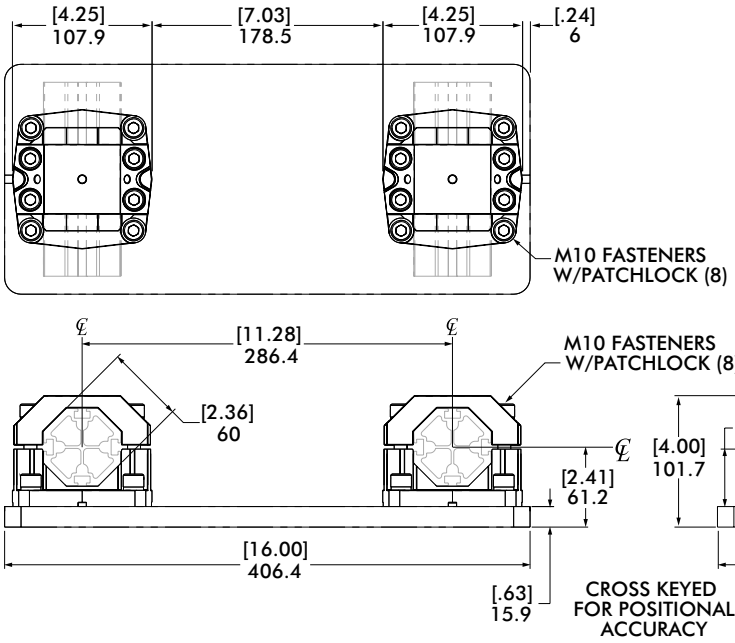

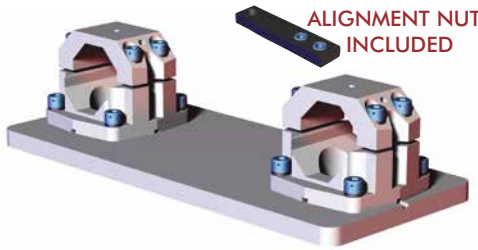

BM1-60 – **DE** – **RXX**

- BM1-60: MODEL
- DE: BOOM SETUP (DOUBLE)
- RXX: ROBOT INTERFACE PATTERN (PAGE 19-21)

Can be supplied with robot interface hole patterns. (See pages 19-21).

Specifications:
Max. Static Product Load:
675 Nm [500 ft-lb]
Material: Aluminum

Weight
5.2 kg [11.5 lb]

BODYBUILDER™ MID MOUNT ASSEMBLIES

BodyBuilder™ Octagonal Tooling | Dimensions | Technical Specifications

BM1-45/BM1-60 Mid Mount Assembly - Mount Plate

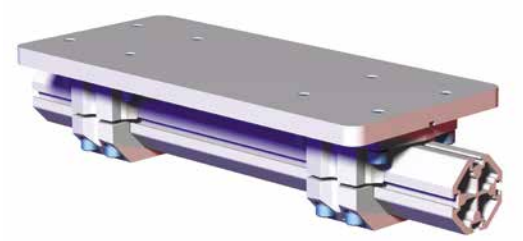

Specifications:
Material: Aluminum

Features:
- Can be machined or left blank.
- Can be supplied with robot interface hole patterns. (See pages 19-21).

BM1-45/BM1-60 Mid Mount Assembly - Adapter Plate

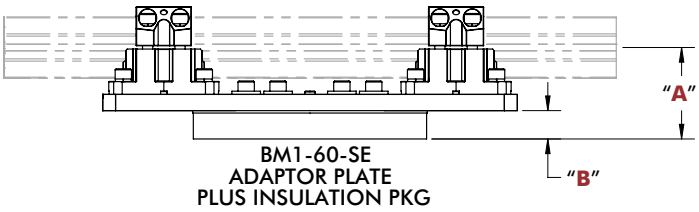

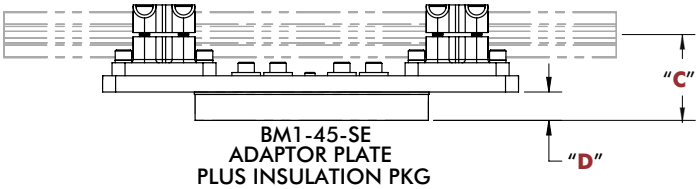

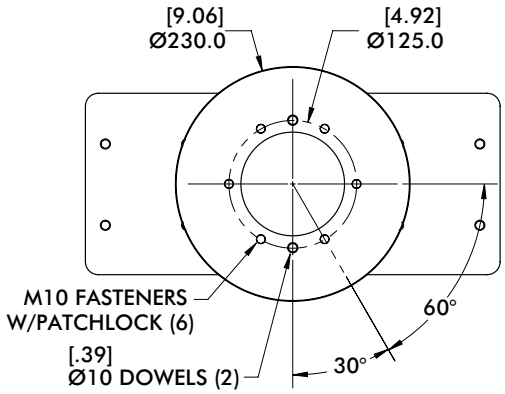

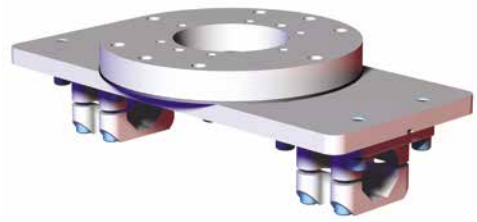

All mounting patterns on pages 19-21 can be used for BM1-60 and BM1-45 Mid Mount Assemblies.
All Ø200mm mounting patterns, when used on the BM1-45 and BM1-60, includes an Adapter Plate as shown.

MID MOUNT ASSEMBLY ADAPTER PLATE				
PATTERN	"A"	"B"	"C"	"D"
R01, R10, R11, R16	89.6 [3.53]	27.8 [1.09]	83.8 [3.30]	27.8 [1.09]
R07, R09	96.0 [3.78]	34.1 [1.34]	99.6 [3.92]	34.1 [1.34]

BODYBUILDER™ MID MOUNT ASSEMBLIES

BodyBuilder™ Octagonal Tooling | Dimensions | Technical Specifications

RM4-45 45mm, RM4-60 60mm Heavy Duty Mid Mount Assembly - Dimensions

Features:

- Can be used as a direct robot interface.
- Provide robust clamping of each extrusion for maximum stability.
- Standard robot interface patterns provided. Plate can also be left blank.

Specifications:

Max. Static Product Load:
453.6 kg [1000 lb]
Material:
Mid Mount:
Cast Aluminum
Clamps: Steel

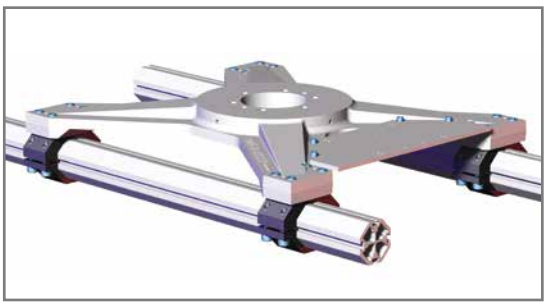



ALIGNMENT NUTS INCLUDED

ROBOT INTERFACE PLATE SHOWN BLANK.
PLEASE REFER TO PAGES 20-22 FOR STANDARD ROBOT INTERFACE BOLT PATTERNS & DIMENSIONS

NOTE:
SCREWS AND FASTERNERS FOR MOUNTING ARE NOT INCLUDED

ADD 1.5MM TO "A"/"AS" DIM FOR INSULATION PACKAGE IF REQUIRED.

INSULATION PACKAGE INCLUDES:
(1) INSULATION PLATE, BUSHINGS AND WASHERS

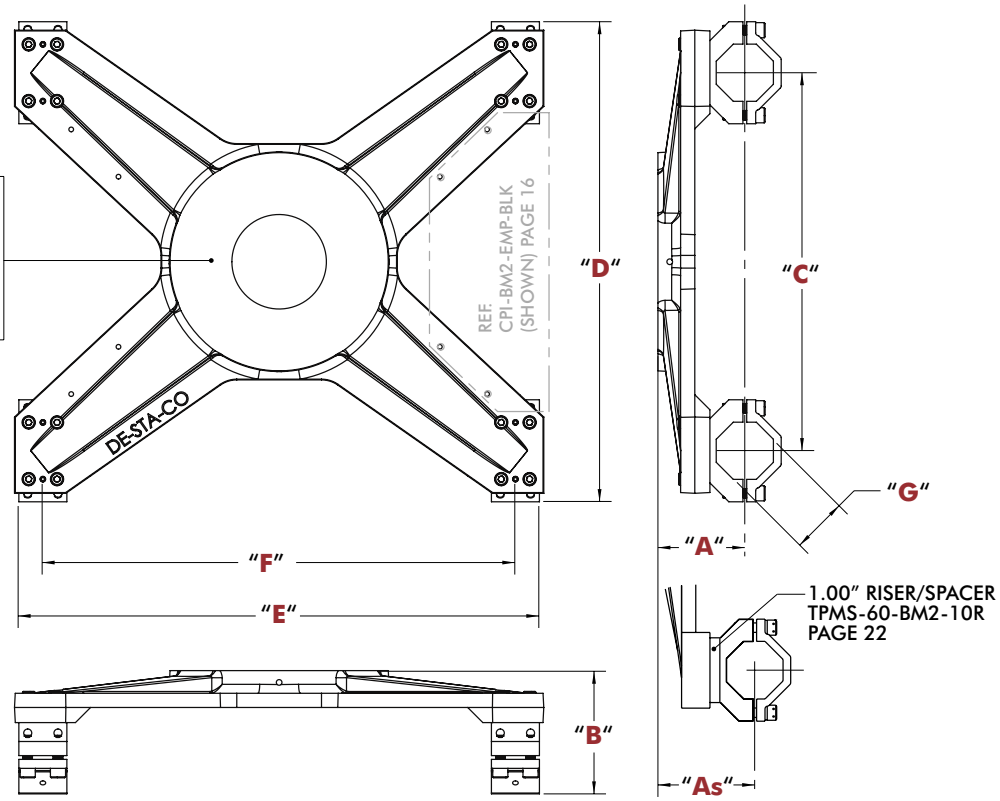

HEAVY-DUTY MID MOUNT ASSEMBLY DIMENSIONS

Model	"A"	"As"	"B"	"C"	"D"	"E"	"F"	"G"	Weight
RM4-45 (45mm)	85.6 [3.37]	111 [4.37]	117.6 [4.63]	400 [15.75]	490 [19.29]	560 [22.05]	500.0 [19.69]	45	13.6 kg [30.0 lb]
RM4-60 (60mm)	91.9 [3.62]	117.3 [4.62]	131.7 [5.185]	400.0 [15.75]	508 [20.00]	560.8 [22.85]	500.0 [19.69]	60	15.5 kg [34.2 lb]

RM4-XX – **RXX** – **S** – **XX**

- **RM4-XX** — **MODEL**
- **RXX** — **ROBOT INTERFACE PATTERN**
- **S** — **SPACER** (Skip if NONE)
- **XX** — **ACCESSORY** (e.g. EPM-01) (Leave Blank if NONE)



Dimensions and technical information are subject to change without notice

BODYBUILDER™ MID MOUNT ACCESSORY PLATE

BodyBuilder™ Octagonal Tooling | Dimensions | Technical Specifications

BM2-EPM Accessory Mount Plate

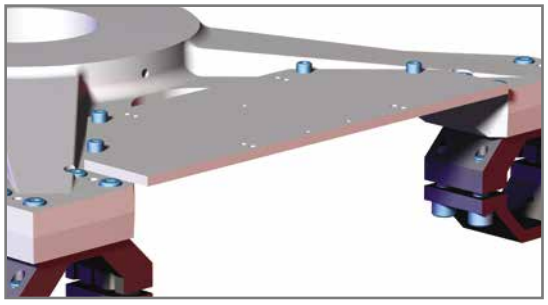

Specifications:
Material: Aluminum

Features:
- Mount directly to the RM4-45 or RM4-60 Heavy Duty Mid-Mount Assembly.
- Used to mount pneumatic manifolds and electric proximity blocks.



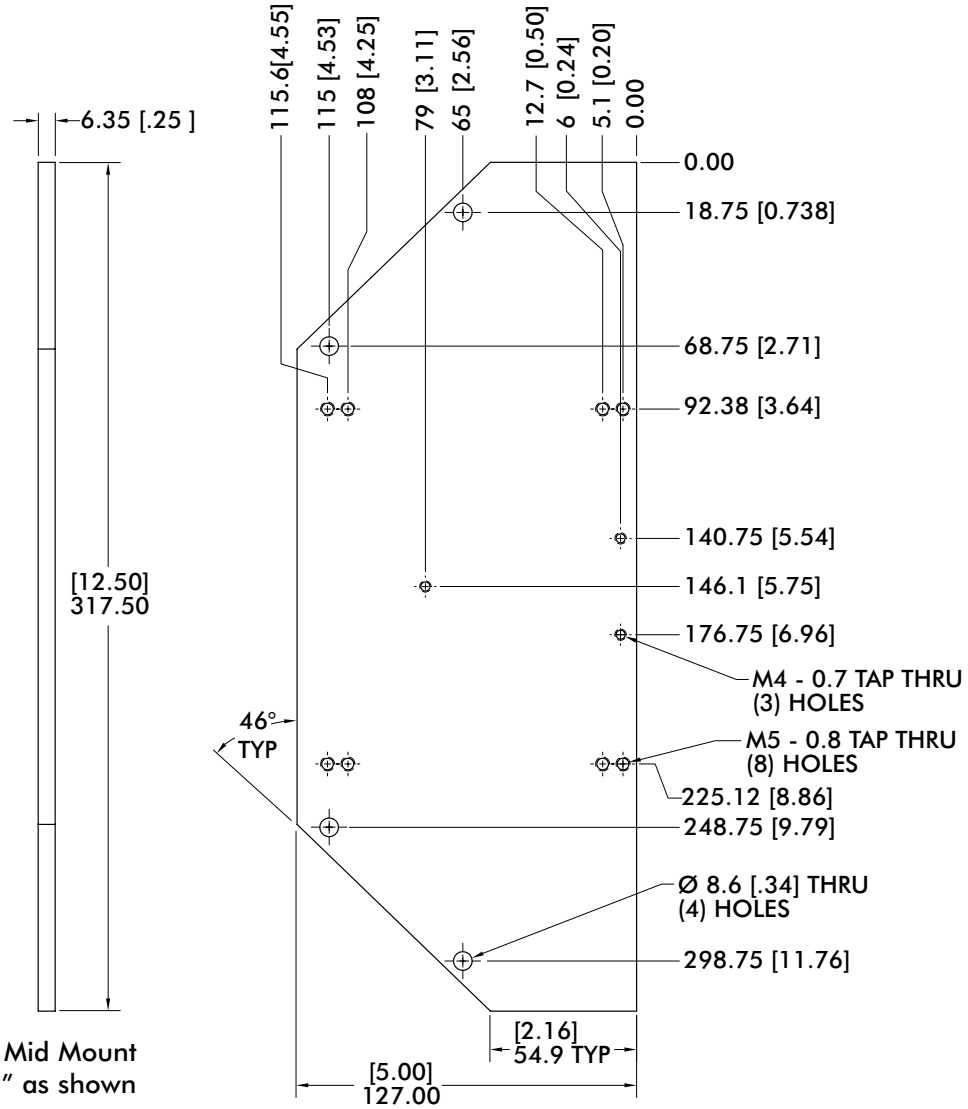

When ordering with Heavy Duty Mid Mount
Please add designation "EPM-01" as shown
RM4-XX-RXX-EPM-01 or
add designation "EPM-BLK" to order blank
RM4-XX-RXX-EPM-BLK
To order separately use Model Number

(A)	Pattern	Model **RM4-45/60**	Weight
EPM-01	Standard	CPI-**BM2**-EPM-**01**	.63 kg [1.39 lb]
EPM-BLK	Blank	CPI-**BM2**-EPM-**BLK**	

BODYBUILDER™ STRUCTURE MID MOUNT ASSEMBLIES

BodyBuilder™ Octagonal Tooling | Dimensions | Technical Specifications

BM3-90 90mm Heavy Duty Mid Mount Assembly - Dimensions

Features:

- Can be used as a direct robot interface.
- Provide robust clamping of each extrusion for maximum stability.
- Standard robot interface patterns provided. Plate can also be left blank.

Specifications:

Max. Static Product Load:
589.7 kg [1300 lb]
Material:
Mid Mount:
Cast Aluminum
Clamps: Steel

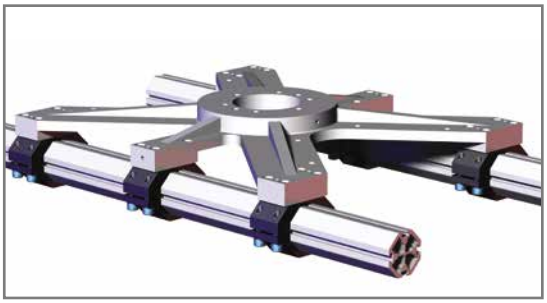



ALIGNMENT NUTS INCLUDED

ROBOT INTERFACE PLATE SHOWN BLANK.
PLEASE REFER TO PAGES 19-21 FOR STANDARD ROBOT INTERFACE BOLT PATTERNS & DIMENSIONS

NOTES:
SCREWS AND FASTENERS FOR MOUNTING ARE NOT INCLUDED

ADD 1.5MM TO "A"/"AS" DIM FOR INSULATION PACKAGE IF REQUIRED.

INSULATION PACKAGE INCLUDES:
(1) INSULATION PLATE, BUSHINGS AND WASHERS

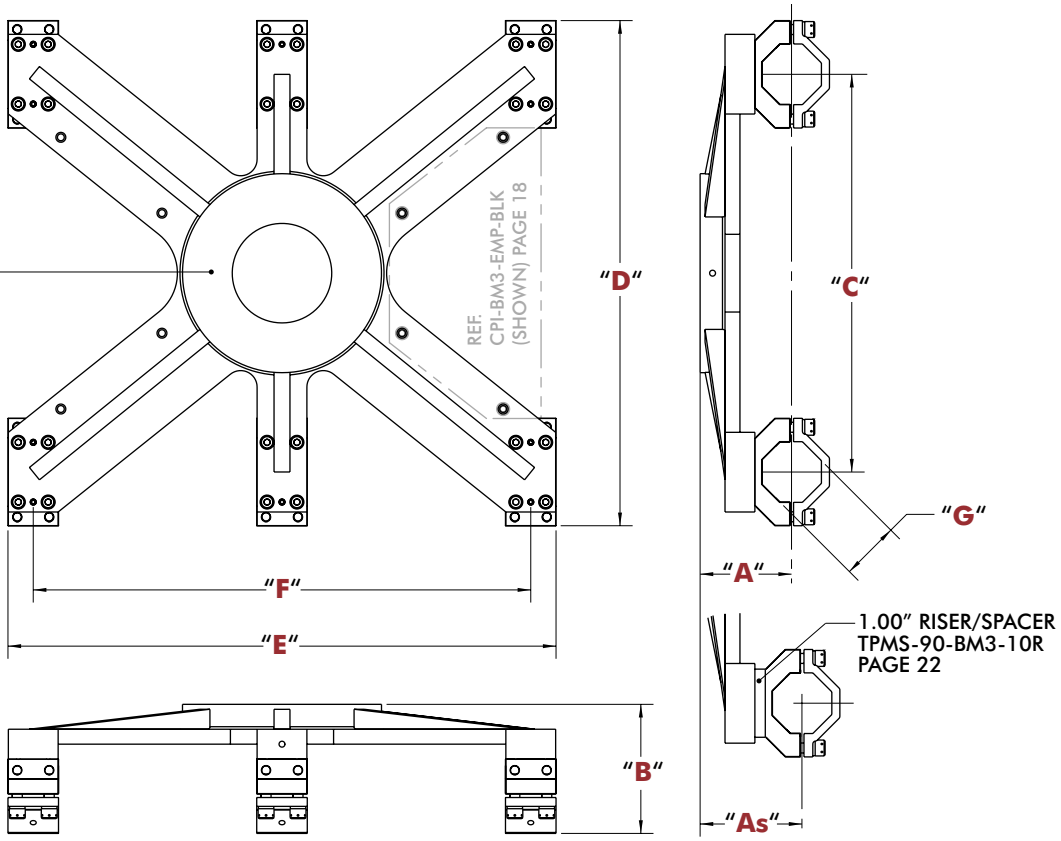

HEAVY-DUTY MID MOUNT ASSEMBLY DIMENSIONS

Model	"A"	"As"	"B"	"C"	"D"	"E"	"F"	"G"	Weight
BM3-90	107.8 [4.24]	133.2 [5.24]	165.3 [6.51]	600.0 [23.62]	738.0 [29.06]	750.0 [29.53]	700.0 [29.53]	90	24.1 kg [53.1 lb]

BM3-90 – **RXX** – **S** – **XX**

- **BM3-90** — **MODEL**
- **RXX** — **ROBOT INTERFACE PATTERN**
- **S** — **SPACER** (Skip if NONE)
- **XX** — **ACCESSORY** (e.g. EPM-01) (Leave Blank if NONE)



Dimensions and technical information are subject to change without notice

BODYBUILDER™ MID MOUNT ACCESSORY PLATE

BodyBuilder™ Octagonal Tooling | Dimensions | Technical Specifications

BM3-EPM Accessory Mount Plate

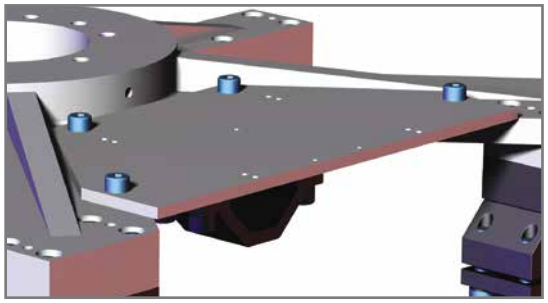

Specifications:
Material: Aluminum

Features:
- Mount directly to the BM3-90 Heavy Duty Mid-Mount Assembly.
- Used to mount pneumatic manifolds and electric proximity blocks.

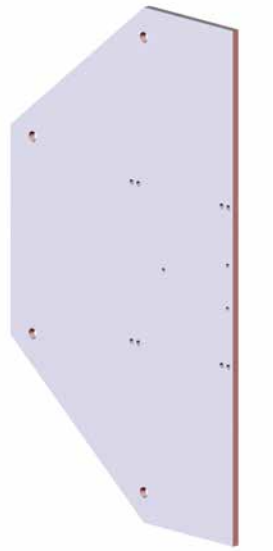

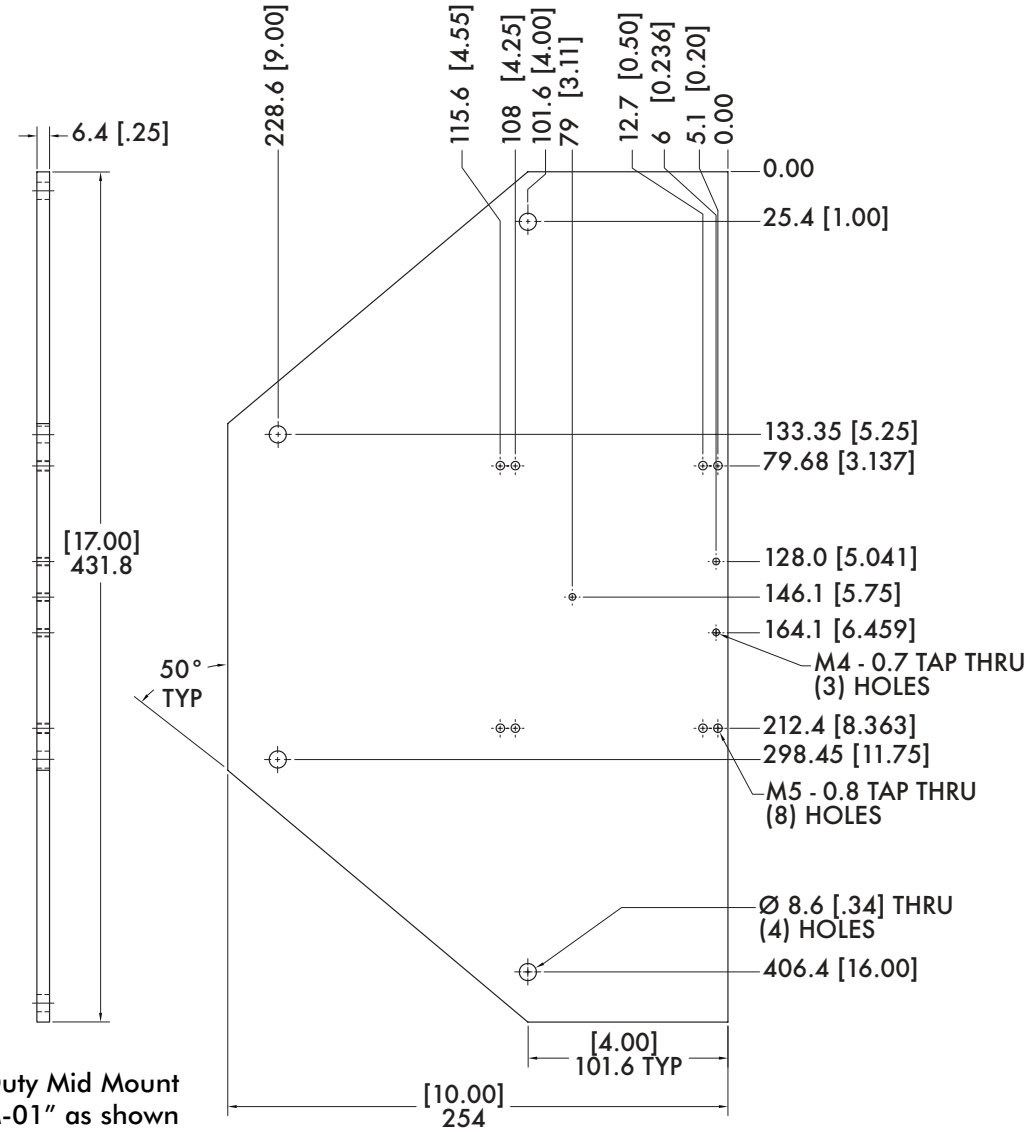

When ordering with Heavy Duty Mid Mount
Please add designation "EPM-01" as shown
BM3-90-RXX-EPM-01 or
add designation "EPM-BLK" to order blank
BM3-90-RXX-EPM-BLK
To order separately use Model Number

Model Number	Weight
CPI-BM3-EPM-xx	1.54 kg [3.39 lb]

BODYBUILDER™ MID MOUNT BOLT PATTERNS

BodyBuilder™ Octagonal Tooling | Robot Interface Bolt Patterns

R01 (Ø200mm Bolt Circle)

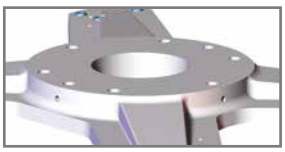

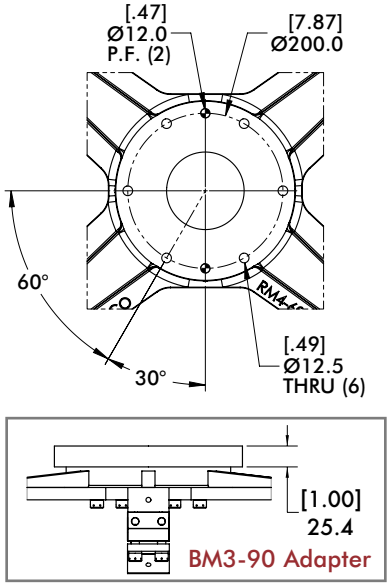

R02 (Ø125mm Bolt Circle)

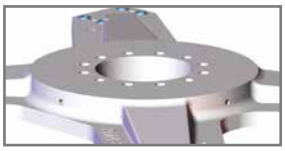

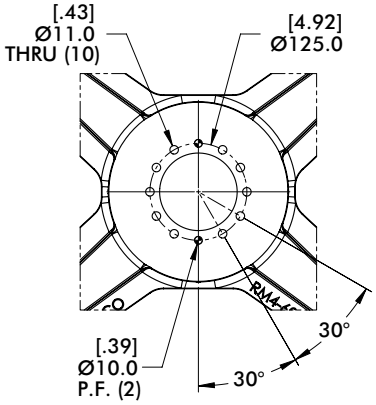

R03 (Ø160mm Bolt Circle)

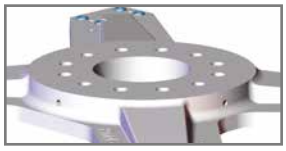

Includes Insulation

Add 1.5mm to Height Dim "A"/"AS"

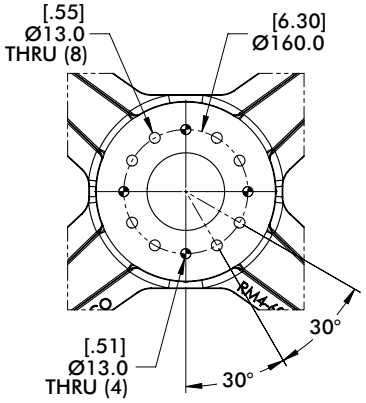

R04 (Ø160mm Bolt Circle)

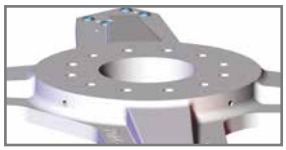

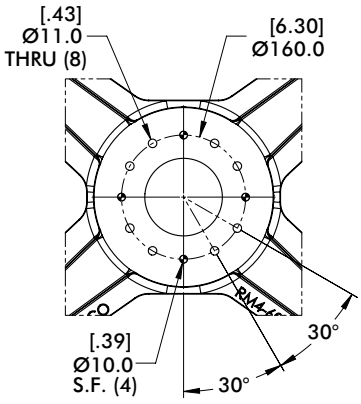

R05 (Ø125mm Bolt Circle)

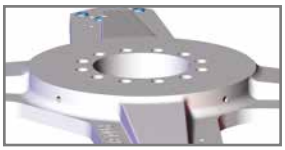

Includes Insulation

Add 1.5mm to Height Dim "A"/"AS"

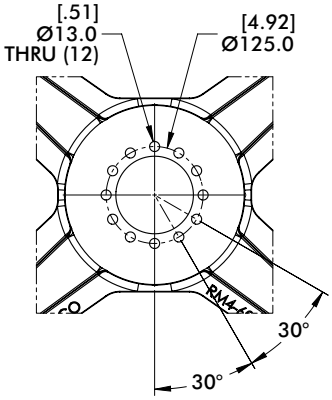

R06 (Ø125/160mm Bolt Circle)

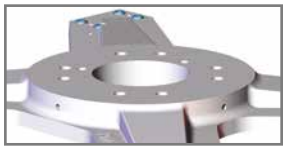

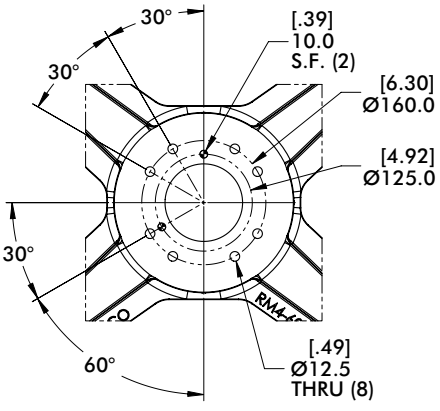

Dimensions and technical information are subject to change without notice

BODYBUILDER™ MID MOUNT BOLT PATTERNS

BodyBuilder™ Octagonal Tooling | Robot Interface Bolt Patterns

R07 (Ø200mm Bolt Circle)

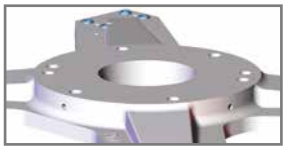

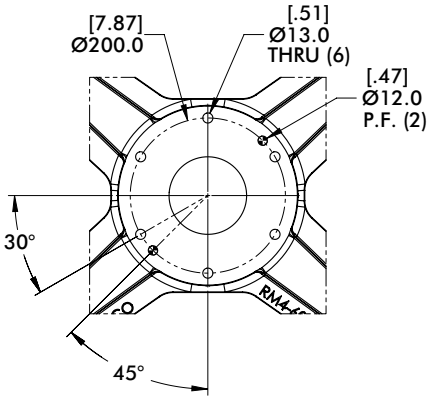

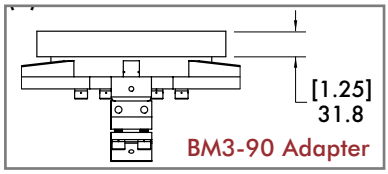

R08 (Ø125/160mm Bolt Circle)

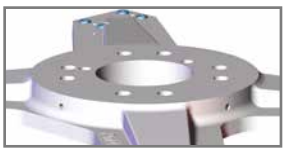

Includes Insulation

Add 1.5mm to Height Dim "A"/"AS"

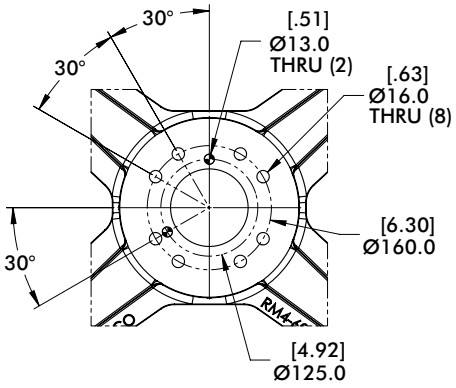

R09 (Ø200mm Bolt Circle)

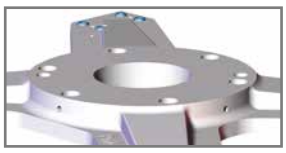

Includes Insulation

Add 1.5mm to Height Dim "A"/"AS"

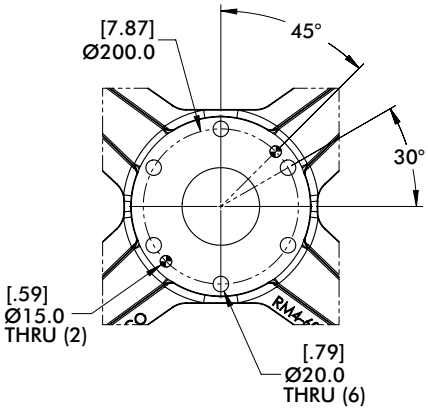

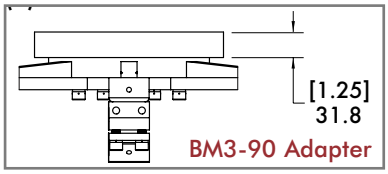

R10 (Ø200mm Bolt Circle)

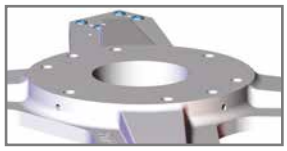

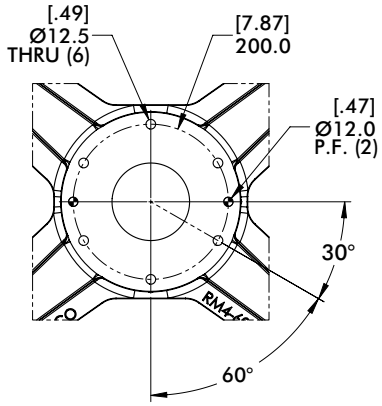

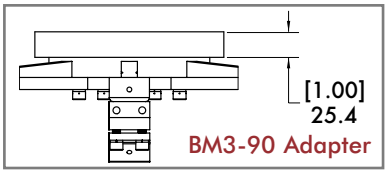

R11 (Ø200mm Bolt Circle)

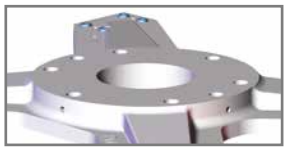

Includes Insulation

Add 1.5mm to Height Dim "A"/"AS"

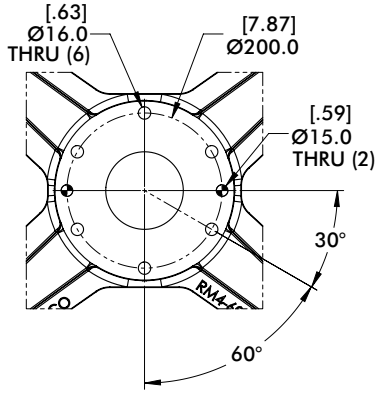

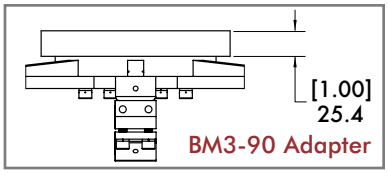

R12 (Ø160mm Bolt Circle)

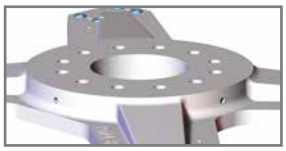

Includes Insulation

Add 1.5mm to Height Dim "A"/"AS"

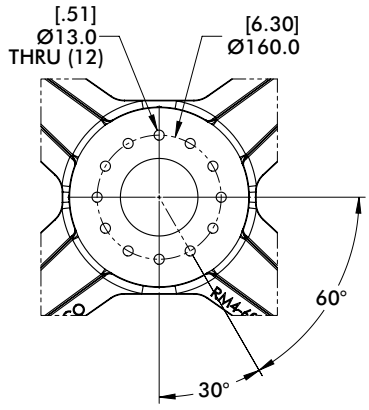

BODYBUILDER™ MID MOUNT BOLT PATTERNS

BodyBuilder™ Octagonal Tooling | Robot Interface Bolt Patterns

R13 (Ø125/160mm Bolt Circle) (Ø110mm Pilot, 5.5mm Deep)

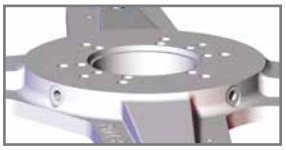

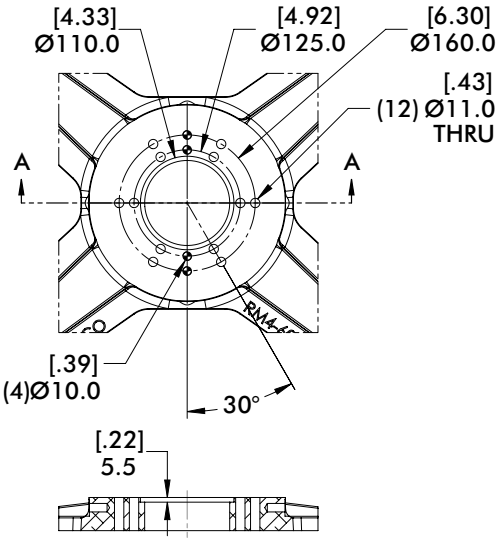

R14 (Ø200mm Bolt Circle) (Ø125mm Pilot, 11mm Deep)

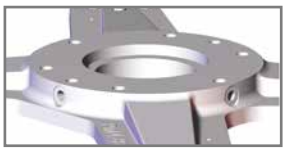

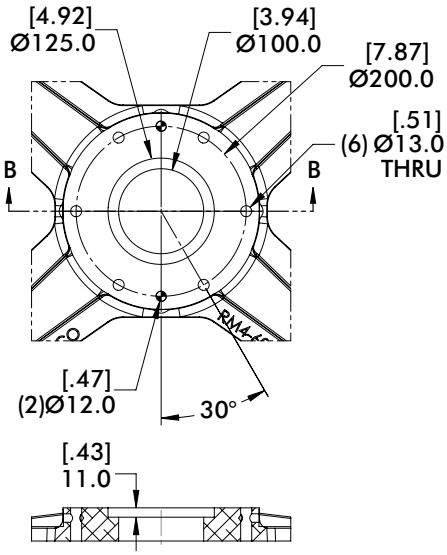

R16 (Ø200mm Bolt Circle)

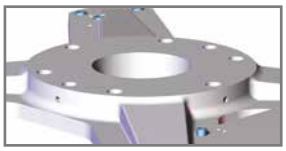

Includes Insulation

Add 1.5mm to Height Dim "A"/"AS"

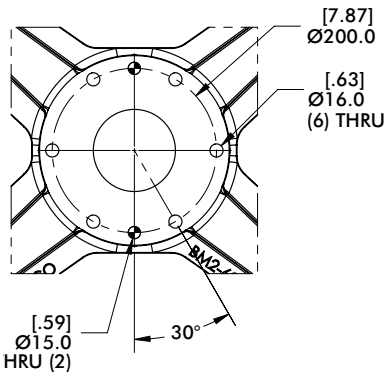

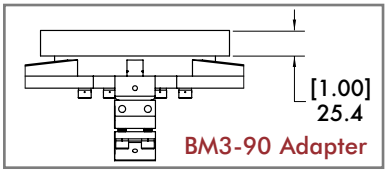

R17 (Ø160mm Bolt Circle)

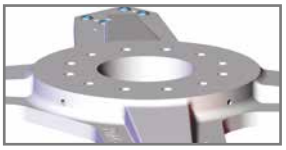

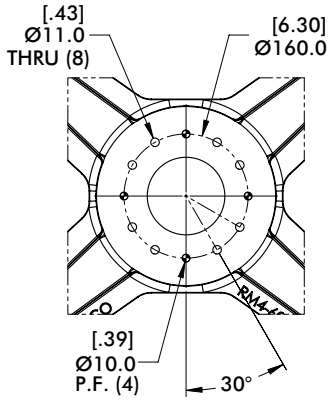

Dimensions and technical information are subject to change without notice

BODYBUILDER™ MID MOUNT RISERS

RM4-60 Heavy Duty Mid Mount Assembly - 1.00" Riser/Spacer

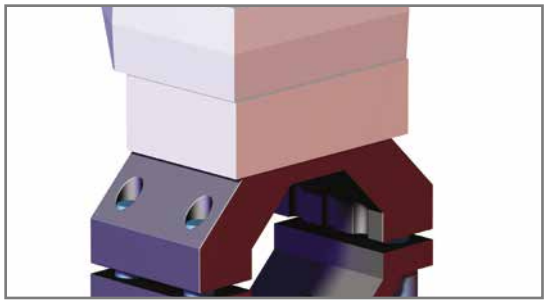

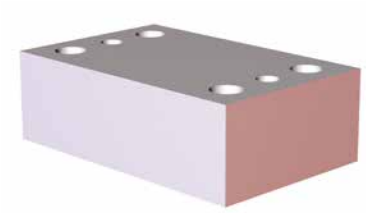

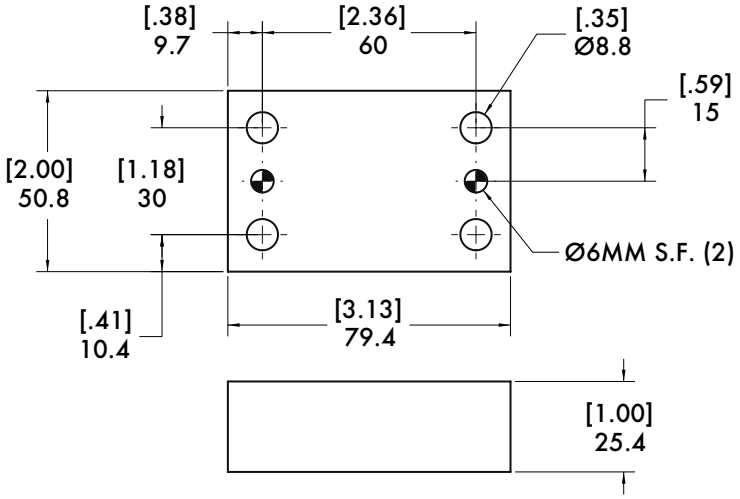

When ordering with Heavy Duty Mid Mount add designation (S) as shown:

RM4-60-RXX-**S**

To order Riser separately use Model Number.

Riser for	Model	Weight
RM4-45/60	TPMS-**60-BM2**-10R	.26 kg [.56 lb]

Specifications:
Material: Aluminum

BM3-90 Heavy Duty Mid Mount Assembly - 1.00" Riser/Spacer

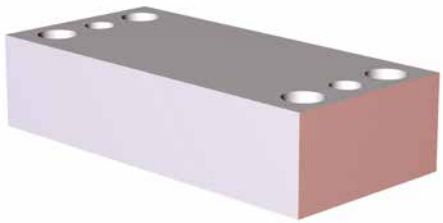

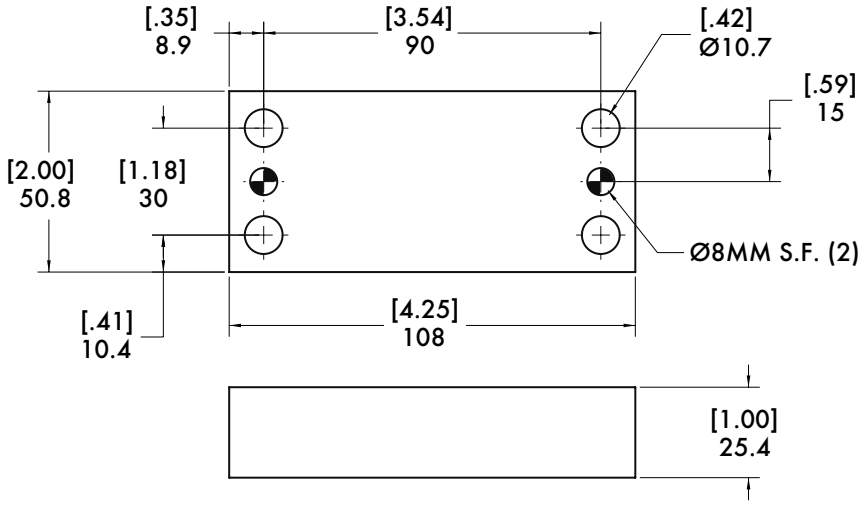

When ordering with Heavy Duty Mid Mount add designation (S) as shown:

BM3-90-RXX-**S**

To order Riser separately use Model Number.

Model Number	Weight
TPMS-90-BM3-10R	.34 kg [.76 lb]

Specifications:
Material: Aluminum

BODYBUILDER™ HOLD TABLE

BodyBuilder™ Octagonal Tooling | Dimensions | Technical Specifications

HTW 6" SQ. Pedestal Hold Table Weldment

Features:

- Pedestal Hold Table Weldment when used in conjunction with Mid Mount assemblies serves as a pedestal base for a robust parts nest.

Specifications:

Material: Steel

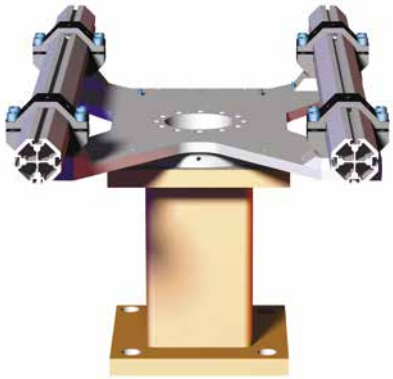

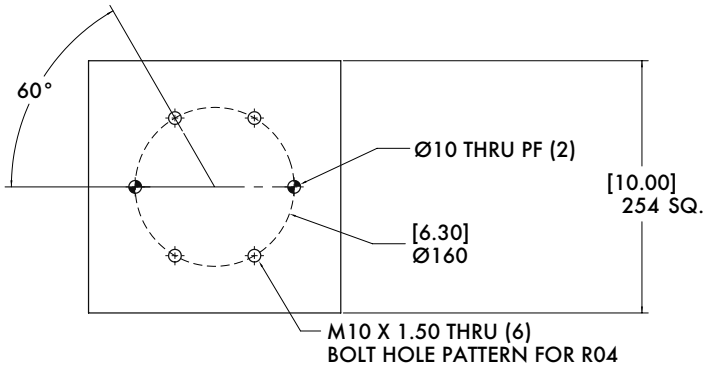

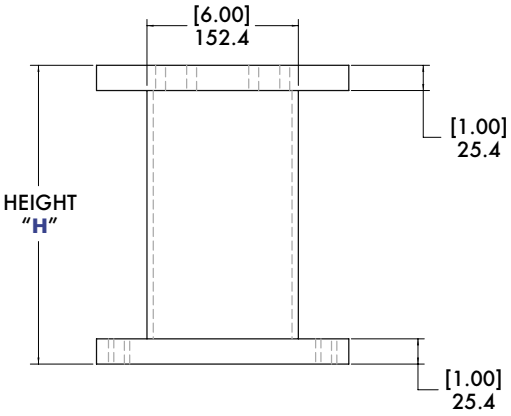

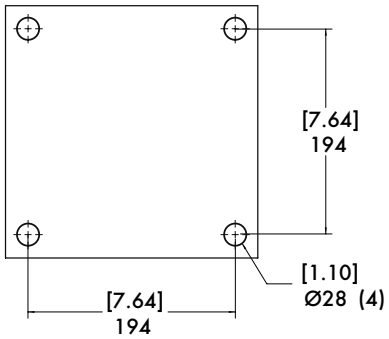



CPI-HTW-"H" HOLD TABLE WELDMENT		
"H"	Model Number	Weight
250	CPI-HTW-250	32.43 kg [71.30lb]
300	CPI-HTW-300	33.75 kg [74.40lb]
350	CPI-HTW-350	35.16 kg [77.50lb]
400	CPI-HTW-400	36.56 kg [80.60lb]
450	CPI-HTW-450	37.97 kg [83.70lb]
500	CPI-HTW-500	39.37 kg [86.81lb]
550	CPI-HTW-550	40.78 kg [89.91lb]
600	CPI-HTW-600	42.19 kg [93.01lb]
650	CPI-HTW-650	43.59 kg [96.11lb]
700	CPI-HTW-700	45.00 kg [99.21lb]
750	CPI-HTW-750	46.41 kg [102.31lb]
800	CPI-HTW-800	47.81 kg [105.41lb]
850	CPI-HTW-850	49.22 kg [108.51lb]
900	CPI-HTW-900	50.62 kg [111.61lb]

Dimensions and technical information are subject to change without notice

BODYBUILDER™ HOLD TABLE

BodyBuilder™ Octagonal Tooling | Dimensions | Technical Specifications

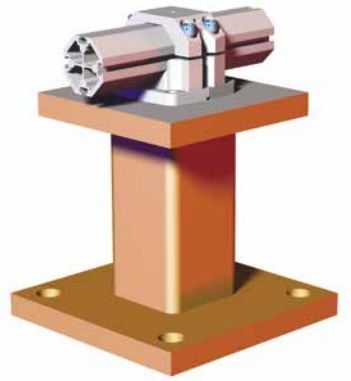

HTW-4 4" SQ. Pedestal Hold Table Weldment

Specifications:
Material: Steel

Features:
- Pedestal Hold Table Weldment when used in conjunction with 45mm or 60mm flange and end mount assemblies serves as a pedestal base for a robust parts nest.

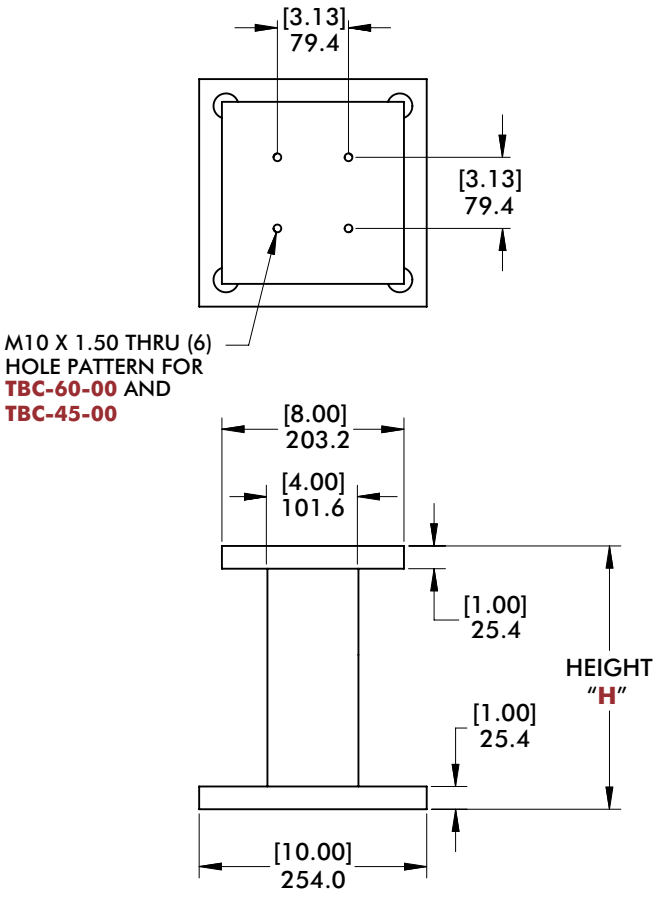

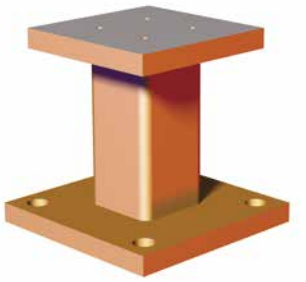

CPI-HTW-"H"-4 HOLD TABLE WELDMENT		
"H"	Model Number	Weight
250	CPI-HTW-250-4	24.02 kg [52.97lb]
300	CPI-HTW-300-4	24.93 kg [54.96lb]
350	CPI-HTW-350-4	25.83 kg [56.95lb]
400	CPI-HTW-400-4	26.73 kg [58.94lb]
450	CPI-HTW-450-4	27.63 kg [60.93lb]
500	CPI-HTW-500-4	28.54 kg [62.92lb]
550	CPI-HTW-550-4	29.44 kg [63.82lb]
600	CPI-HTW-600-4	30.35 kg [66.90lb]
650	CPI-HTW-650-4	31.25 kg [68.89lb]
700	CPI-HTW-700-4	32.15 kg [70.88lb]
750	CPI-HTW-750-4	33.05 kg [72.87lb]
800	CPI-HTW-800-4	33.96 kg [74.87lb]
850	CPI-HTW-850-4	34.86 kg [76.86lb]
900	CPI-HTW-900-4	35.76 kg [78.85lb]

BODYBUILDER™ HOLD TABLE

BodyBuilder™ Octagonal Tooling | Dimensions | Technical Specifications

HTW-1200/1400 Pass-Thru Hold Table Weldment

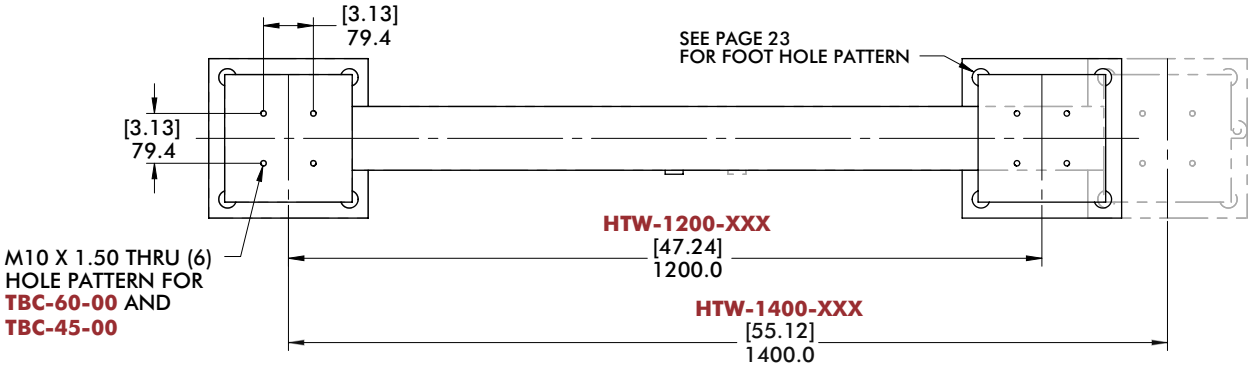

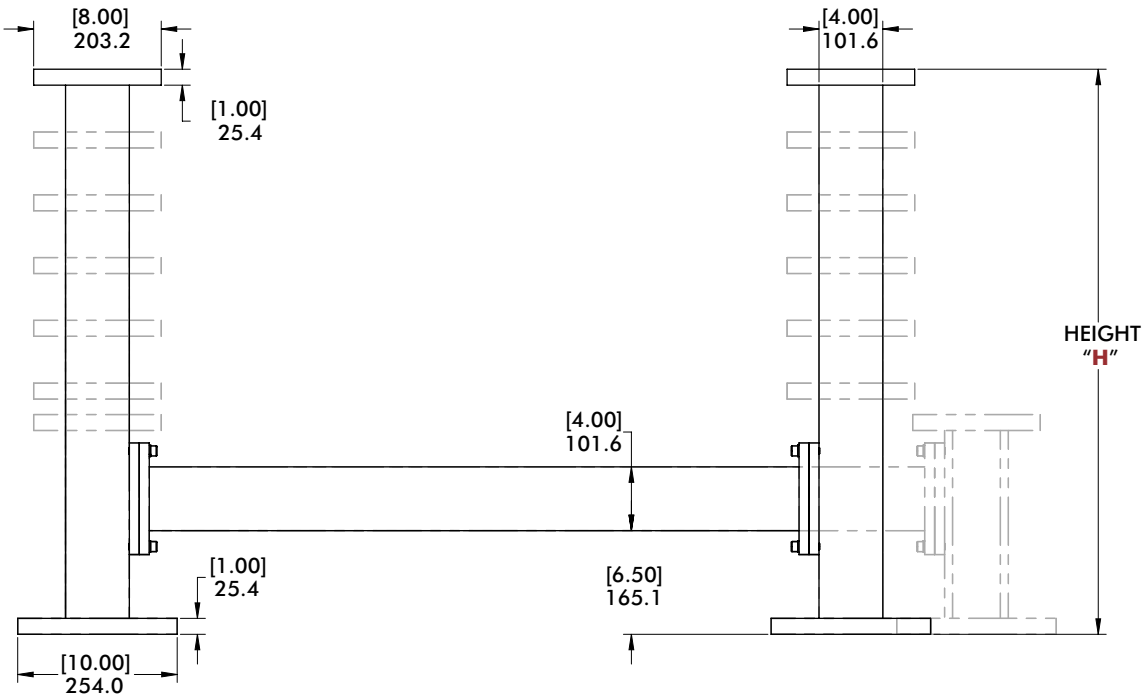



CPI-"MODEL"-"H" PASS THROUGH TABLE WELDMENT				
" H "	"Model"	Weight	"Model"	Weight
350	HTW-1200	84.62 kg [186.55lb]	HTW-1400	88.39 kg [194.87lb]
400	HTW-1200	86.42 kg [190.53lb]	HTW-1400	90.02 kg [198.85lb]
500	HTW-1200	90.04 kg [198.50lb]	HTW-1400	93.81 kg [206.82lb]
600	HTW-1200	93.65 kg [206.46lb]	HTW-1400	97.42 kg [214.78lb]
700	HTW-1200	97.26 kg [214.42lb]	HTW-1400	101.04 kg [222.74lb]
800	HTW-1200	100.87 kg [222.39lb]	HTW-1400	104.65 kg [230.71lb]
900	HTW-1200	104.49 kg [230.35lb]	HTW-1400	108.26 kg [238.67lb]

Dimensions and technical information are subject to change without notice

BODYBUILDER™ MID MOUNT ASSEMBLIES

BodyBuilder™ Octagonal Tooling | Dimensions | Technical Specifications

ATI-151-90HD-60BB 60mm Mid Mount

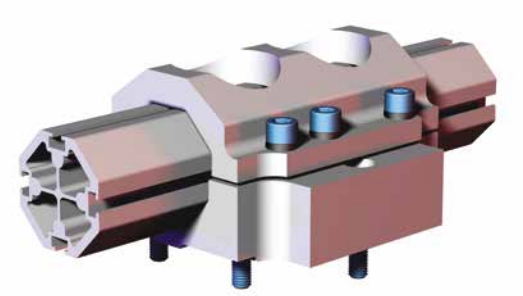

Specifications:
Max. Static Product Load:
746 Nm [550 ft-lb]]
Material: Aluminum

Features:
- Can be used as direct robot interface.

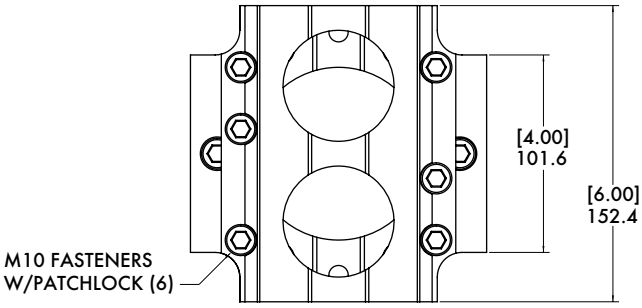

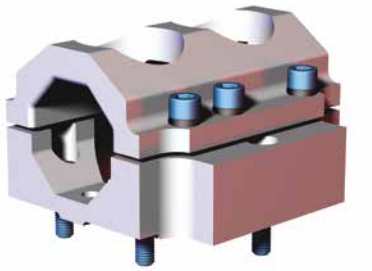

Fasteners included, Dowels not included

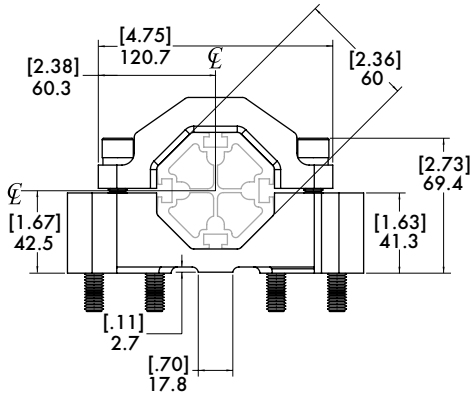

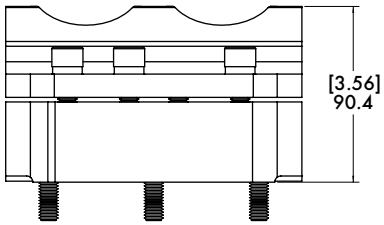

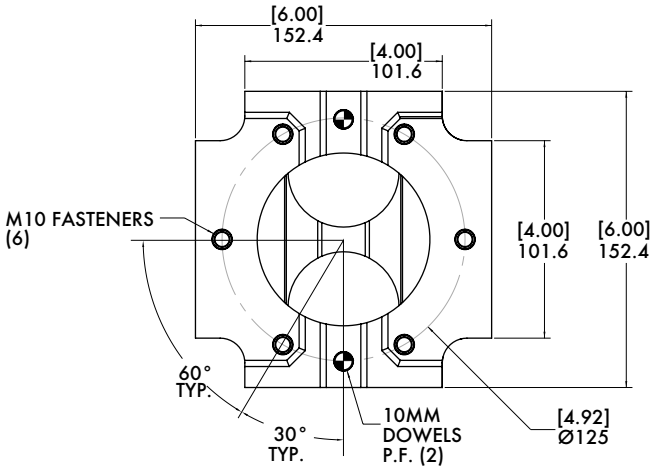

Model Number	Weight
CPI-ATI-151-90HD-60BB	3.22 kg [7.10 lb]

BODYBUILDER™ MID MOUNT ASSEMBLIES

BodyBuilder™ Octagonal Tooling | Dimensions | Technical Specifications

ATI-151-90HD-90BB 90mm Mid Mount

Features:

- Can be used as direct robot interface.

Specifications:

Max. Static Product Load:
1355 Nm [1000 ft-lb]
Material: Aluminum

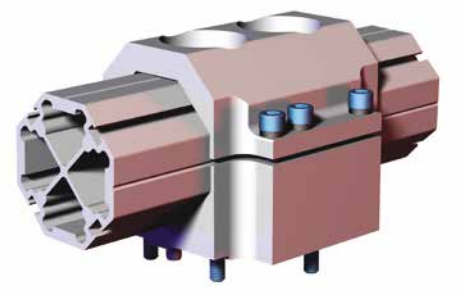

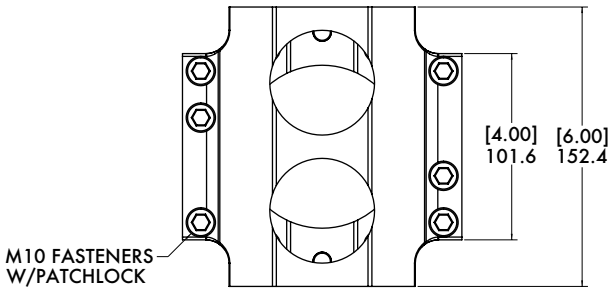

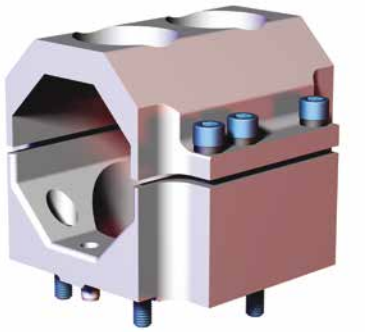

Fasteners and Dowels Included

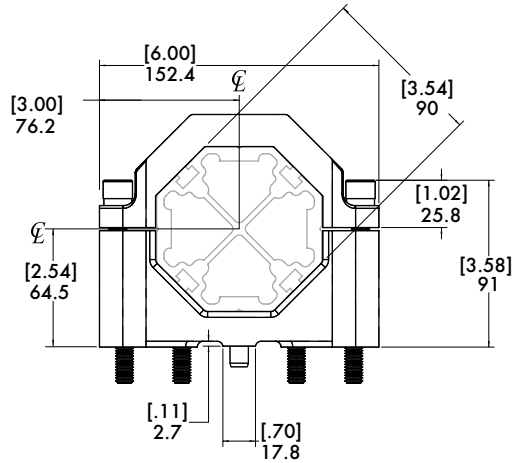

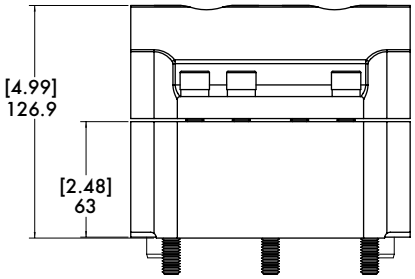

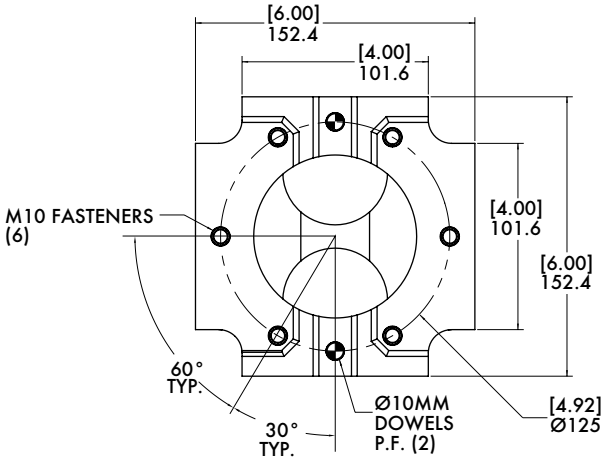

Model Number	Weight
CPI-ATI-151-90HD-90BB	2.89 kg [6.38 lb]

Dimensions and technical information are subject to change without notice

BODYBUILDER™ END MOUNT ASSEMBLIES

BodyBuilder™ Octagonal Tooling | Dimensions | Technical Specifications

CL-90B-160F 90mm End Mount



Specifications:
Max. Static Clamp Load:
746 Nm [550 ft-lb]
Material: Aluminum

Features:
- Can be used as direct robot interface.

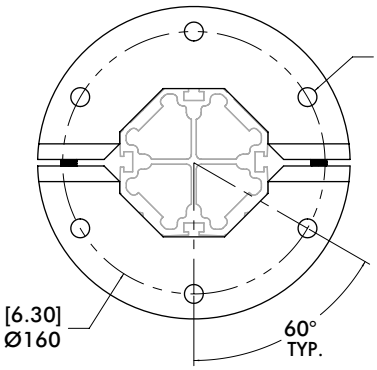

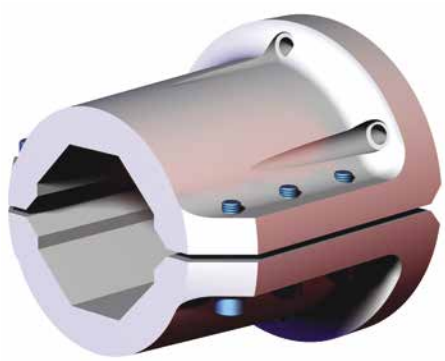

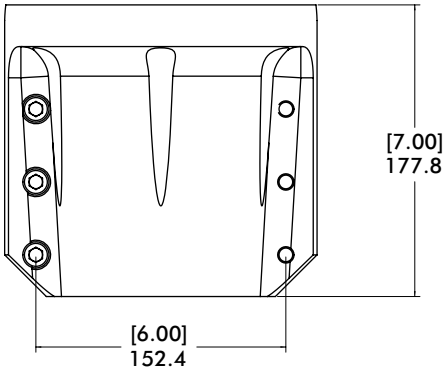

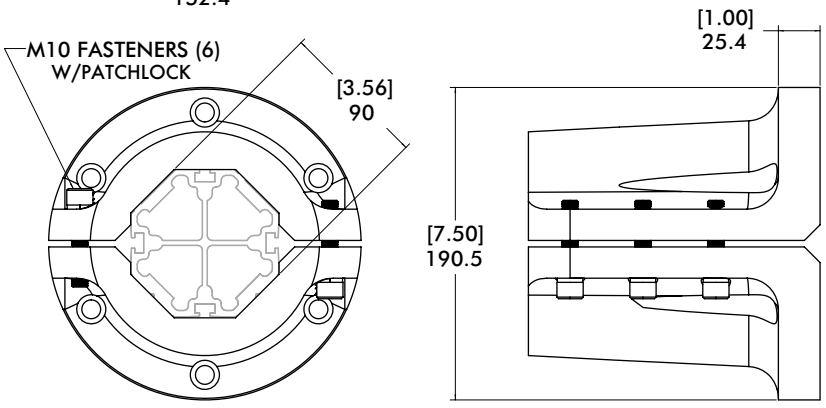

Model Number	Weight
CPI-CL-90B-160F	5.91 kg [13.04 lb]

BODYBUILDER™ BAYONETS

BodyBuilder™ Octagonal Tooling | Dimensions | Technical Specifications

RDCF-60B 60mm BodyBuilder™ Bayonet

Features:

- Used in conjunction with Quick Disconnect Housing to provide an efficient method for changing tools manually.
- Two, hardened alignment pins allow quick and accurate installation into the housing.
- Optional 4-port air and electric available.

Specifications:

Max. Static Product Load:
746 Nm [550 ft-lb]
Material:
Body: Aluminum
Pins: Steel



Used in conjunction with Quick Disconnect Housing to provide an efficient method for changing tools manually.

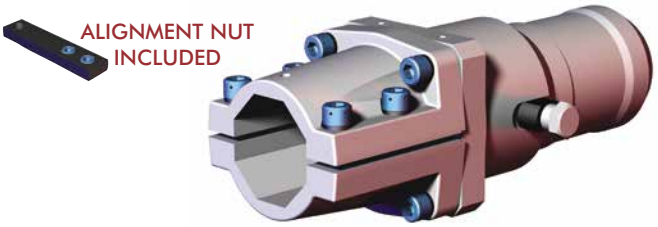

Optional 4-port air and electric connections available.

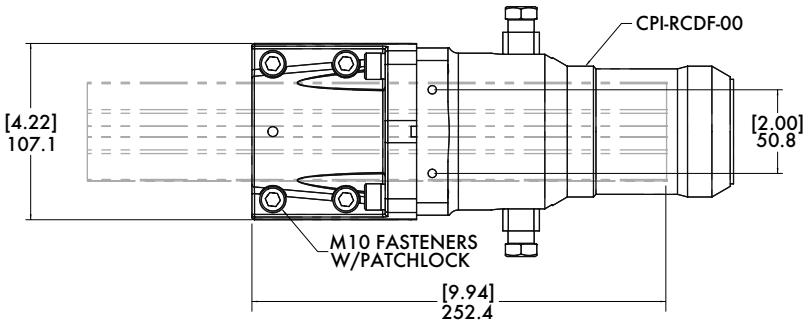

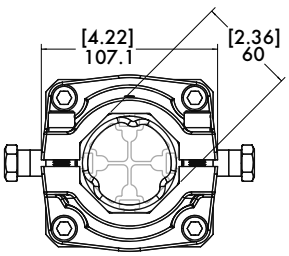

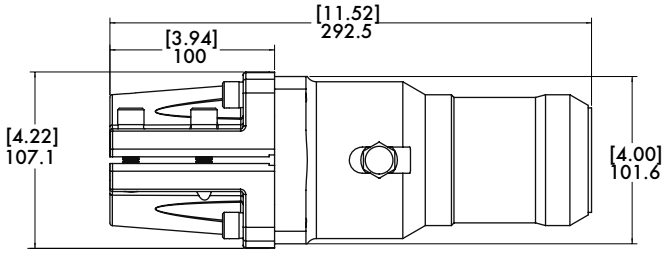

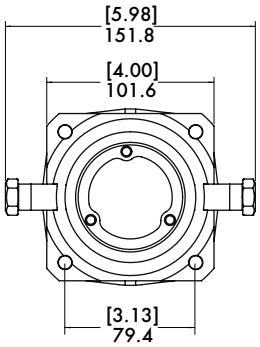

Model Number	Weight
CPI-RDCF-60B-00-00-X	3.16 kg [6.96 lb]

Dimensions and technical information are subject to change without notice

BODYBUILDER™ STRUCTURE END MOUNT ASSEMBLIES

BodyBuilder™ Octagonal Tooling | Dimensions | Technical Specifications

RDN-25-6 Manual Quick Disconnect Housing



Specifications:

Max. Static Product Load:
746 Nm [550 ft-lb]

Material:
Body: Aluminum
Knuckles: Brass
Handle and Hooks: Steel
Inserts: Urethane

Features:

- Actuation of handle allows quick and accurate installation by pulling the bayonet into a fixed position within the housing.
- The internal rings eliminate vibration and seat the bayonet into a clamped position.
- Hardened steel retainer slots reduce wear and extend product life.

Used in conjunction with 60 mm BodyBuilder™ Bayonet to provide an efficient method for changing tools manually.



Optional 4-port air and electric connections available.

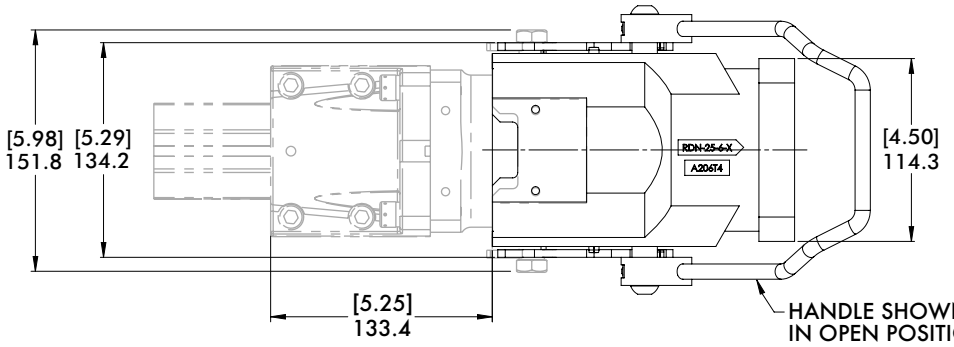

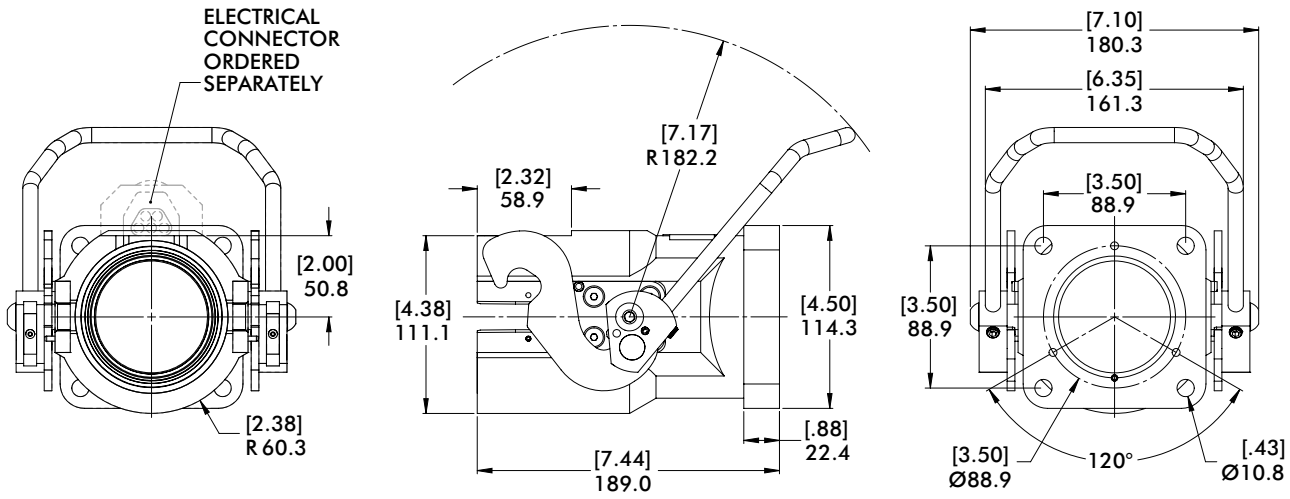

Model Number	Weight
CPI-RDN-25-6	4.00 kg [8.90 lb]

BODYBUILDER™ ALIGNMENT SYSTEM

BodyBuilder™ Octagonal Tooling | Explaining the Patented Alignment System

BodyBuilder™ Robotic Tooling System offers a patented alignment system, ensuring that all BodyBuilder™ components can be adjusted to the original set-up position.

Once the BodyBuilder™ structure bracket mount is secured into place during set-up, insert the alignment nut into the octagonal boom channel groove.

Be sure the alignment nut is inserted so that when it is slid under the bracket mount, the set screws can still be accessed outside the bracket mount as shown.

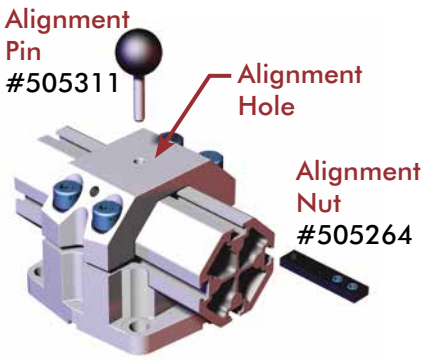

Slide the alignment nut along the boom groove and underneath the bracket mount until the hole in the block and the appropriate calibration hole in the bracket mount is aligned visual.

Insert the alignment pin into the alignment hole of the bracket mount, through the alignment nut until it stops in the groove of the boom channel.

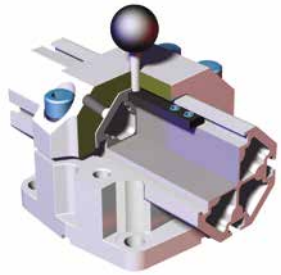

With the alignment pin in place, the alignment nut should not move. Secure bracket mount in the channel groove by tightening the two set screws. Remove alignment pin as it is used as a probe for alignment purposes only.



The alignment nut remains in place even when the bracket mount is removed.

To order replacement alignment pin or nut, please use the following order numbers:
Alignment Pin #505311, Alignment Nut #505264



To Replace the Bracket mount, place the assembled bracket mount on the Bodybuilder™ boom until the alignment holes are visually aligned. Insert the alignment pin to secure bracket mount in place, and tighten the fasteners.

Remove the alignment pin and continue tightening the fasteners to specified torque values.

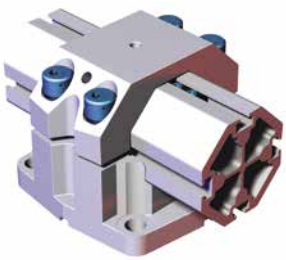

U.S. PATENT 6,349,912

Dimensions and technical information are subject to change without notice

30B-30B 30mm to 30mm Transition Bracket Assembly

Features:

- Connects (2) 30mm extrusions perpendicular to each other.
- Lightweight, high-strength aluminum design.

Specifications:

Max.Static Clamp Load:
30mm: 271 Nm [200 ft-lb]
Material: Aluminum



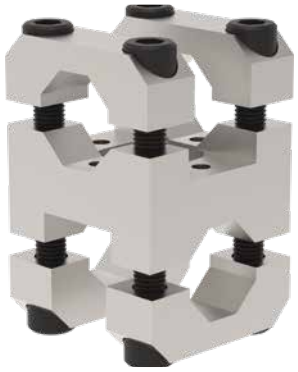



ALIGNMENT NUTS INCLUDED

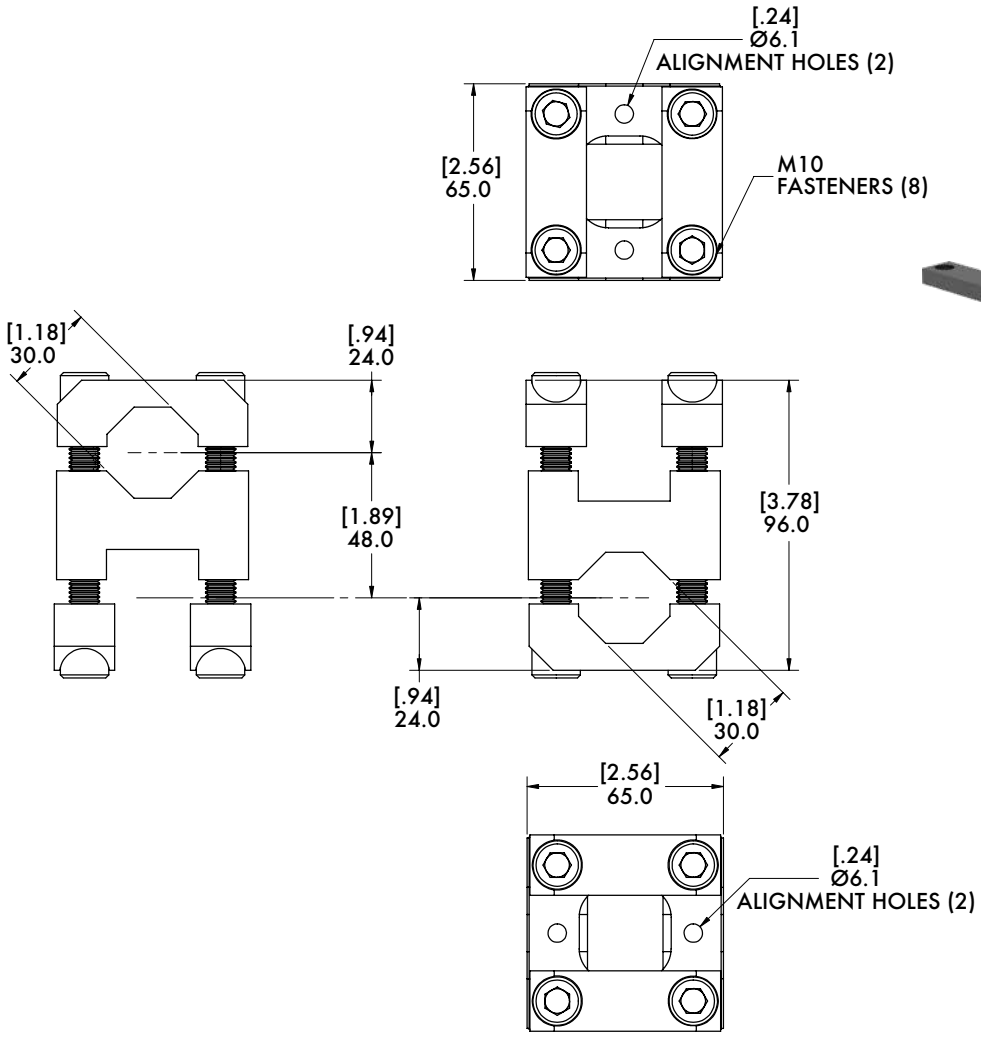

Model Number	Weight
M-30B-30B-M	.82 kg [1.80 lb]

BODYBUILDER™ TRANSITION BRACKETS AND BLOCKS

BodyBuilder™ Octagonal Tooling | Dimensions | Technical Specifications

30B-45B 30mm to 45mm Transition Bracket Assembly



Specifications:

Max. Static Clamp Load:
45mm: 475 Nm [350 ft-lb]
30mm: 271 Nm [200 ft-lb]
Material: Aluminum

Features:

- Connects 30mm and 45mm extrusions perpendicular to each other.
- Lightweight, high-strength aluminum design.

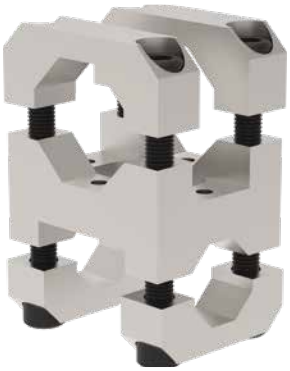



ALIGNMENT NUTS INCLUDED

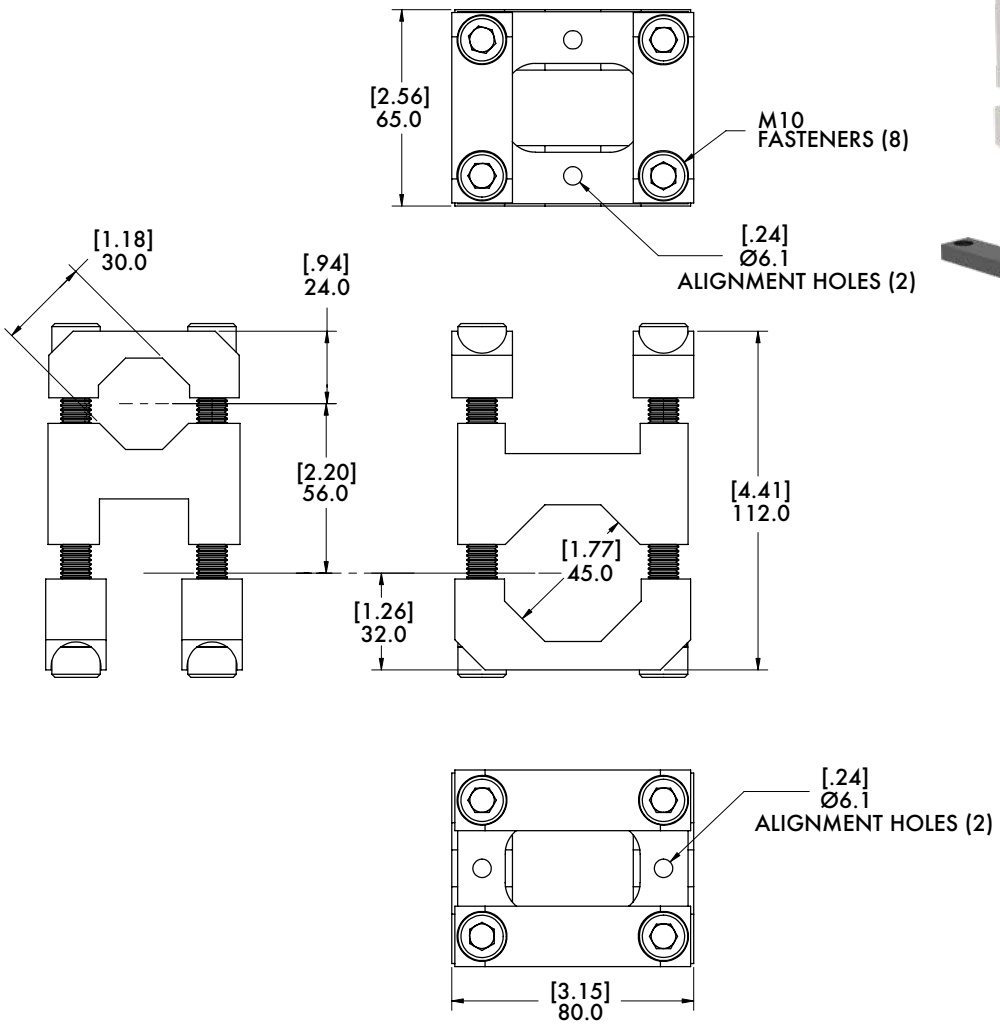

Model Number	Weight
M-30B-45B-M	1.00 kg [2.20 lb]

Dimensions and technical information are subject to change without notice

BODYBUILDER™ TRANSITION BRACKETS AND BLOCKS

BodyBuilder™ Octagonal Tooling | Dimensions | Technical Specifications

45B-45B 45mm to 45mm Transition Bracket Assembly

Features:
- Connects (2) 45mm extrusions perpendicular to each other.
- Lightweight, high-strength aluminum design

Specifications:
Max. Static Clamp Load:
45mm: 475 Nm [350 ft-lb]
Material: Aluminum







ALIGNMENT NUTS INCLUDED

Model Number	Weight
M-45B-45B-M	1.05 kg [2.31 lb]

BODYBUILDER™ TRANSITION BRACKETS AND BLOCKS

BodyBuilder™ Octagonal Tooling | Dimensions | Technical Specifications

30B-60B 30mm to 60mm Transition Bracket Assembly



Specifications:

Max. Static Clamp Load:
60mm: 746 Nm [550 ft-lb]
30mm: 271 Nm [200 ft-lb]
Material: Aluminum

Features:

- Connects 30mm and 60mm extrusions perpendicular to each other.
- Lightweight, high-strength aluminum design.





ALIGNMENT NUTS INCLUDED

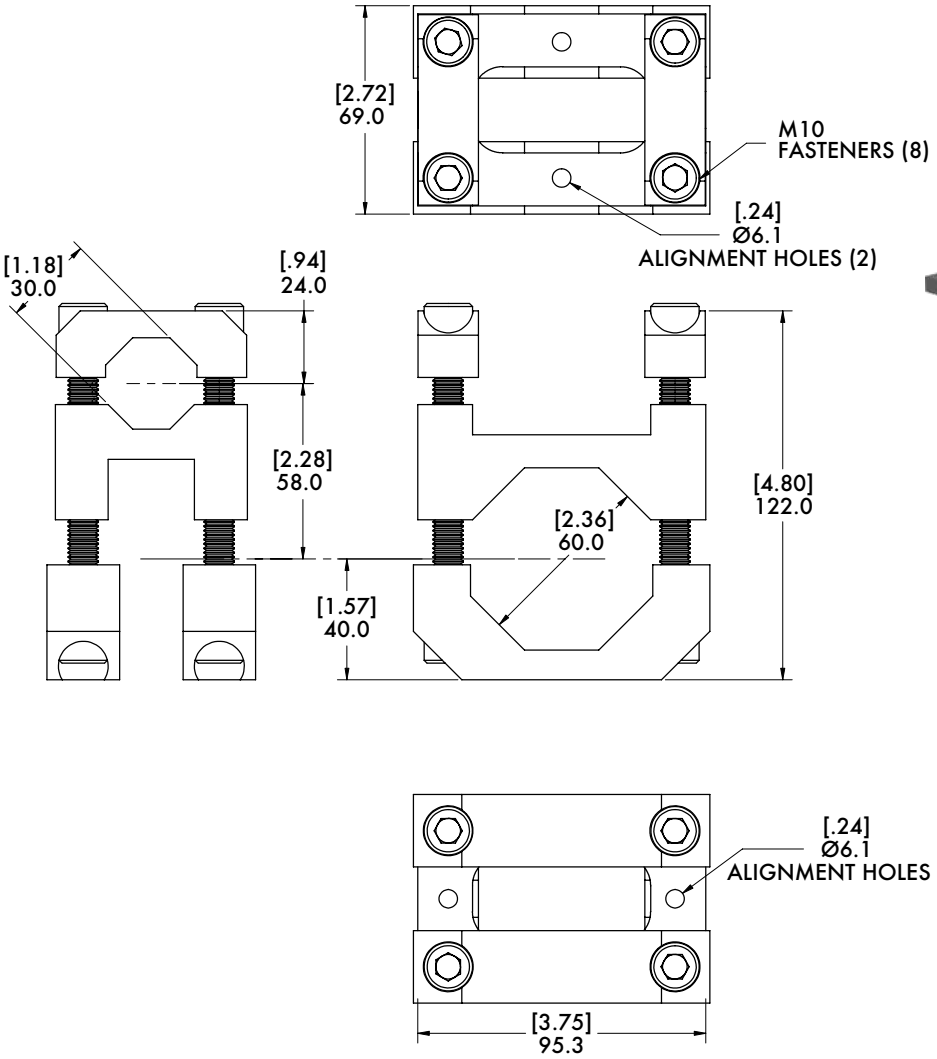

Model Number	Weight
M-30B-60B-M	1.13 kg [2.50 lb]

BODYBUILDER™ TRANSITION BRACKETS AND BLOCKS

BodyBuilder™ Octagonal Tooling | Dimensions | Technical Specifications

45B-60B 45mm to 60mm Transition Bracket Assembly

Features:

- Connects 45mm and 60mm extrusions perpendicular to each other.
- Lightweight, high-strength aluminum design.

Specifications:

Max. Static Clamp Load:
60mm: 746 Nm [550 ft-lb]
45mm: 475 Nm [350 ft-lb]
Material: Aluminum







ALIGNMENT NUTS INCLUDED

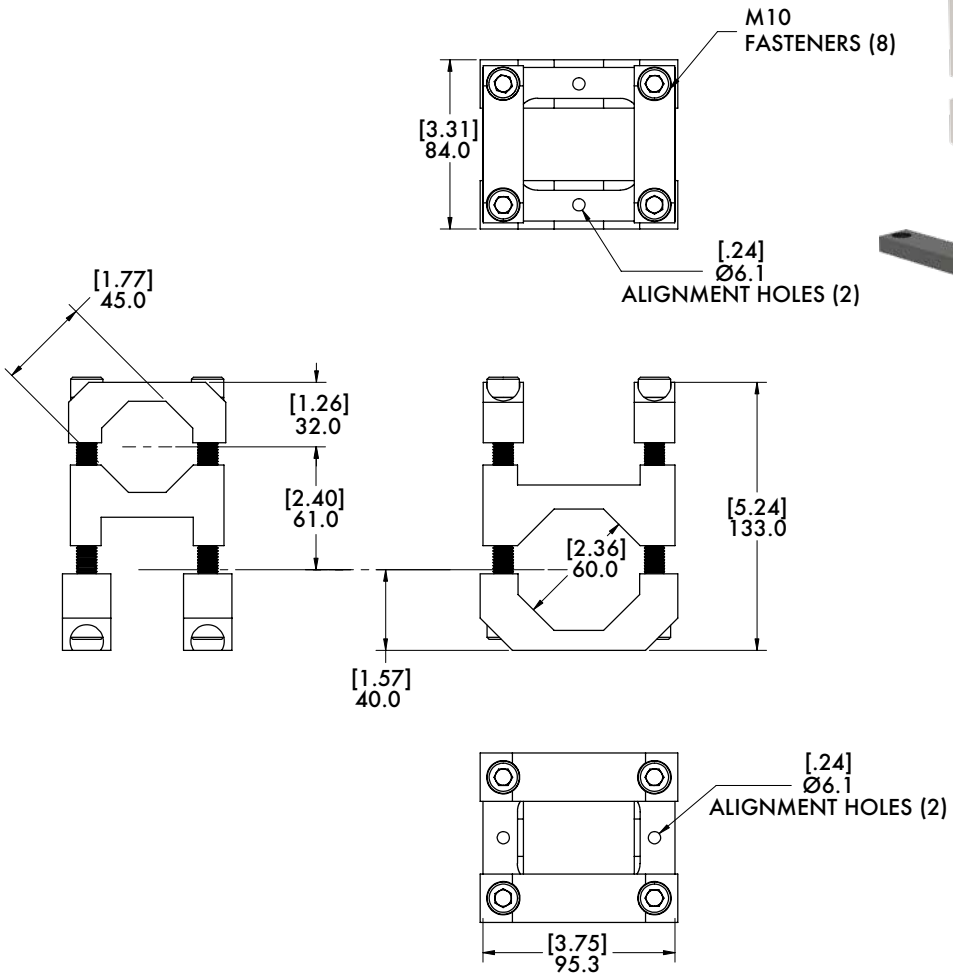

Model Number	Weight
M-45B-60B-M	1.23 kg [2.70 lb]

BODYBUILDER™ TRANSITION BRACKETS AND BLOCKS

BodyBuilder™ Octagonal Tooling | Dimensions | Technical Specifications

60B-60B 60mm to 60mm Transition Bracket Assembly



Specifications:

Max. Static Clamp Load:
60mm: 746 Nm [550 ft-lb]
Material: Aluminum

Features:

- Connects (2) 60mm extrusions perpendicular to each other.
- Lightweight, high-strength aluminum design





ALIGNMENT NUTS INCLUDED

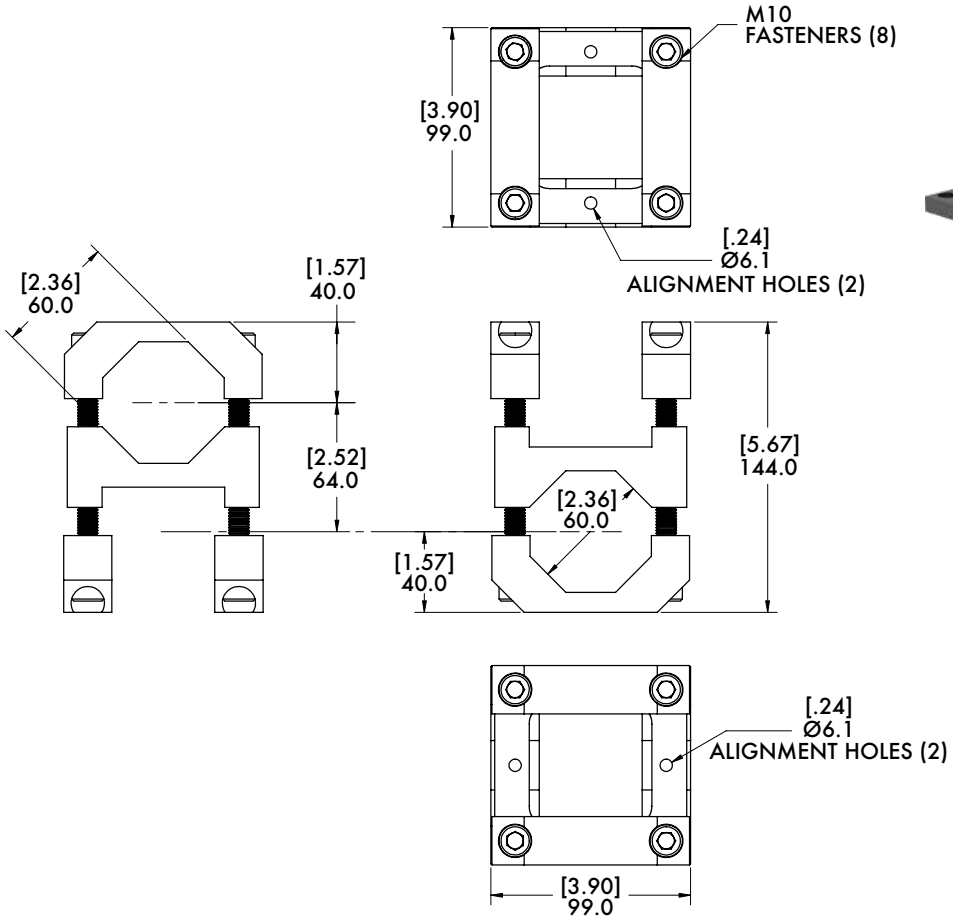

Model Number	Weight
M-60B-60B-M	1.36 kg [3.00 lb]

Dimensions and technical information are subject to change without notice

BODYBUILDER™ TRANSITION BRACKETS AND BLOCKS

BodyBuilder™ Octagonal Tooling | Dimensions | Technical Specifications

30B-90B 30mm to 90mm Transition Bracket Assembly

Features:

- Connects 30 and 90mm extrusions perpendicular to each other.
- Lightweight, high-strength aluminum design.

Specifications:

Max. Static Clamp Load:
30mm: 271 Nm [200 ft-lb]
90mm: 746 Nm [550 ft-lb]
Material: Aluminum

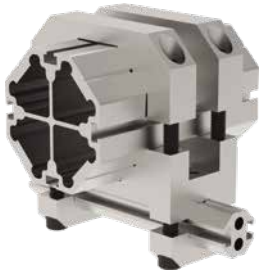





ALIGNMENT NUTS INCLUDED

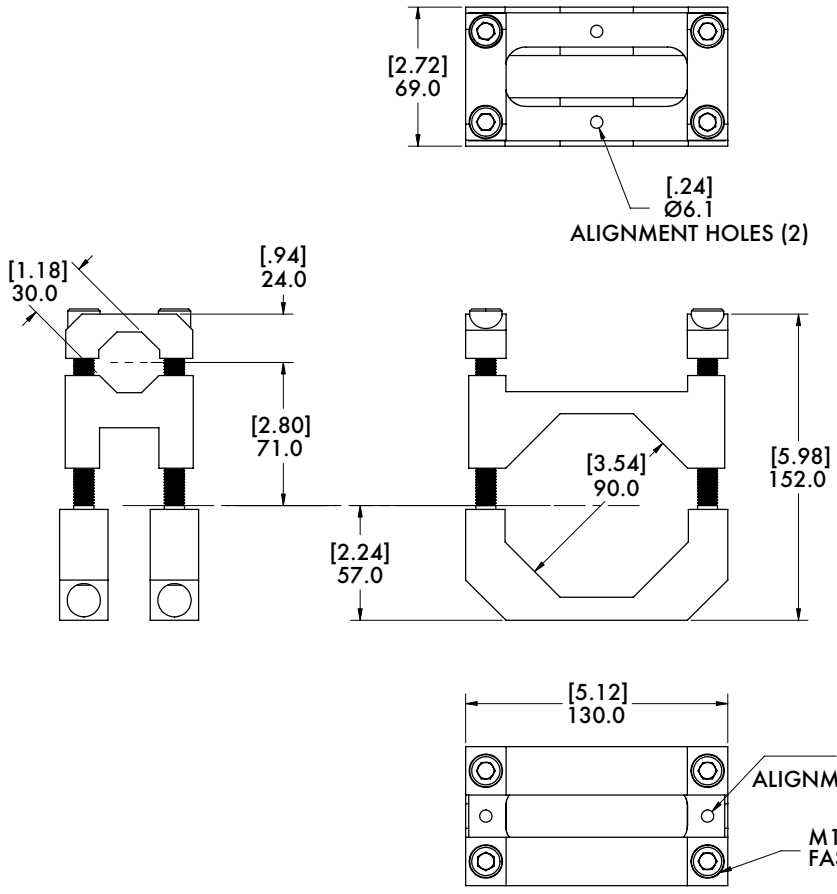

Model Number	Weight
M-30B-90B-M	1.78 kg [3.93 lb]

BODYBUILDER™ TRANSITION BRACKETS AND BLOCKS

BodyBuilder™ Octagonal Tooling | Dimensions | Technical Specifications

45B-90B 45mm to 90mm Transition Bracket Assembly



Specifications:

Max. Static Clamp Load:
45mm: 475 Nm [350 ft-lb]
90mm: 746 Nm [550 ft-lb]
Material: Aluminum

Features:

- Connects 45 and 90mm extrusions perpendicular to each other.
- Lightweight, high-strength aluminum design.





ALIGNMENT NUTS INCLUDED

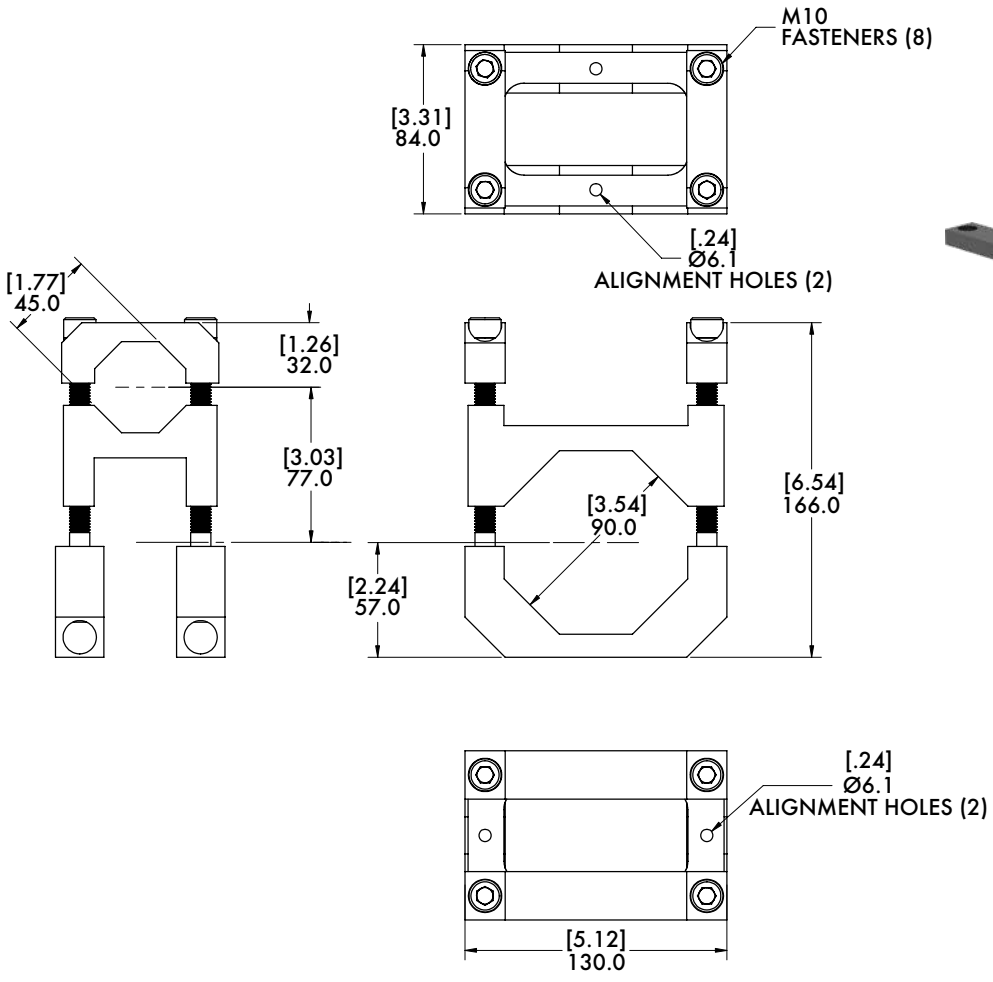

Model Number	Weight
M-45B-90B-M	1.91 kg [4.21 lb]

Dimensions and technical information are subject to change without notice

BODYBUILDER™ TRANSITION BRACKETS AND BLOCKS

BodyBuilder™ Octagonal Tooling | Dimensions | Technical Specifications

60B-90B 60mm to 90mm Transition Bracket Assembly

Features:

- Connects 60mm and 90mm extrusions perpendicular to each other.
- Lightweight, high-strength aluminum design.

Specifications:

Maximum Clamp Load:
60mm and 90mm:
746 Nm [550 ft-lb]
Material: Aluminum







ALIGNMENT NUTS INCLUDED

Model Number	Weight
M-60B-90B-M	2.25 kg [4.97 lb]

BODYBUILDER™ TRANSITION BRACKETS AND BLOCKS

BodyBuilder™ Octagonal Tooling | Dimensions | Technical Specifications

90B-90B 90mm to 90mm Transition Bracket Assembly



Specifications:
Max. Static Clamp Load:
746 Nm [550 ft-lb]
Material: Aluminum

Features:
- Connects (2) 90mm extrusions perpendicular to each other.
- Lightweight, high-strength aluminum design.

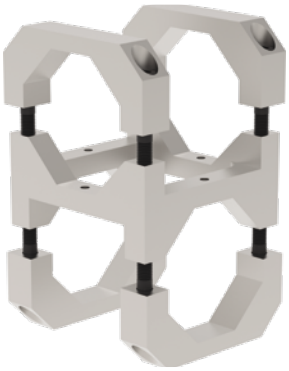



ALIGNMENT NUTS INCLUDED

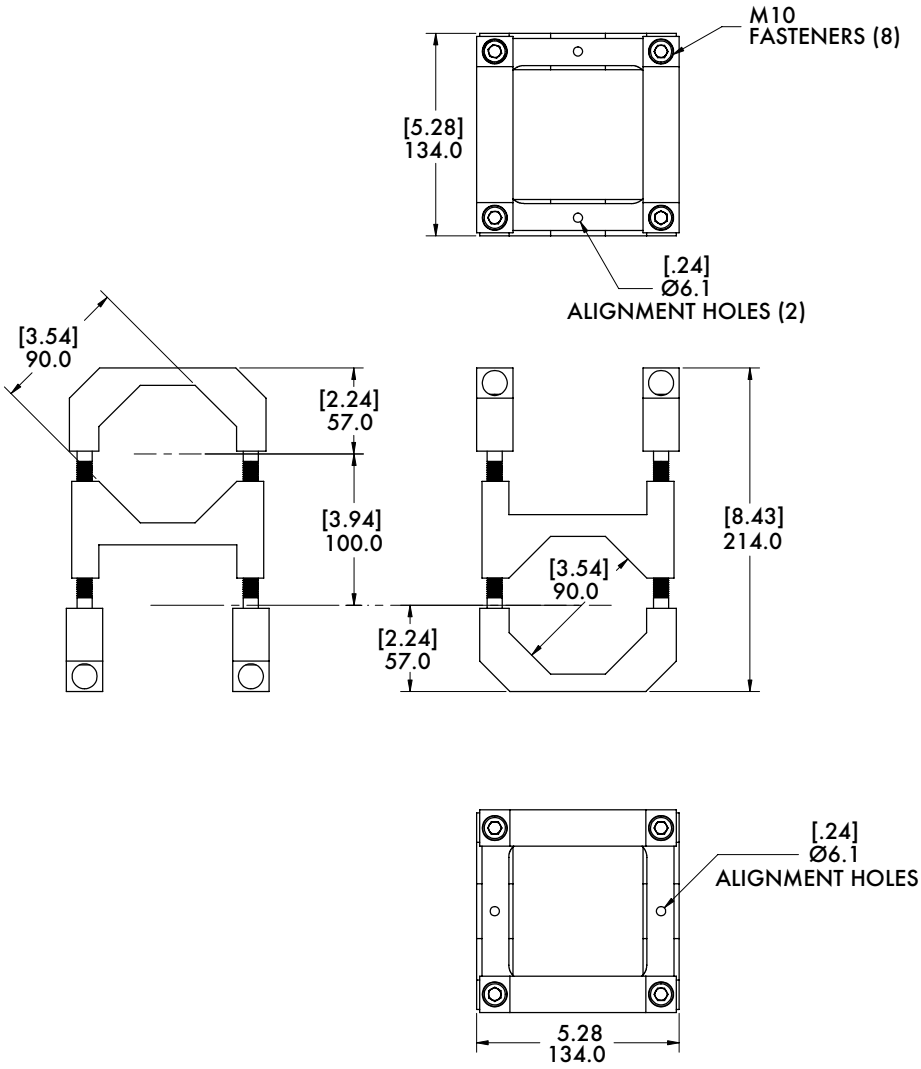

Model Number	Weight
M-90B-90B-M	3.33 kg [7.34 lb]

Dimensions and technical information are subject to change without notice

BodyBuilder™ Octagonal Tooling | Octagon to Round Transition Block Assembly

30B-25M 30mm Octagon to 25mm Round

Specifications:
Max. Static Clamp Load:
407 Nm [300 ft-lb]
Material: High Strength Aluminum

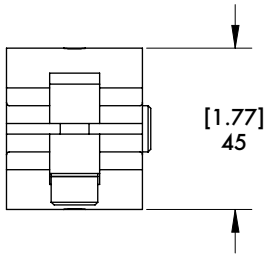

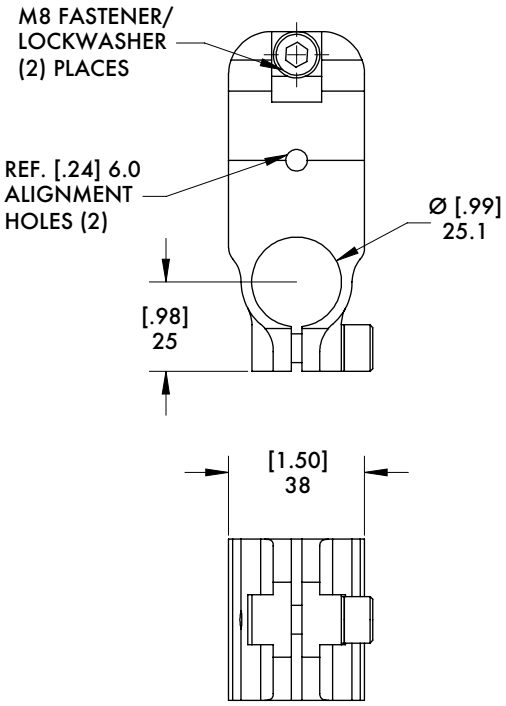

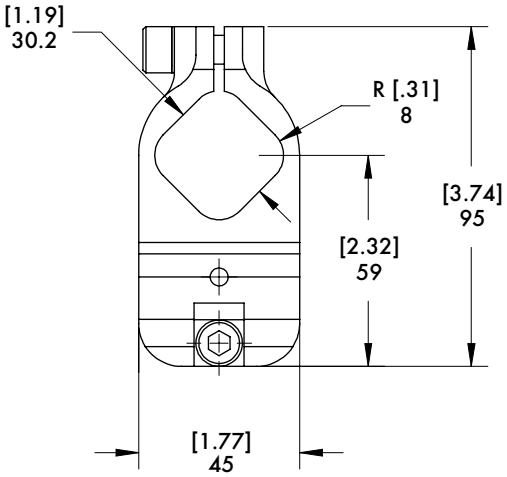



Model Number	Weight
M-30B-25M-M	203g [0.45lbs]

BODYBUILDER™ SQUARE CLAMPS

BodyBuilder™ Octagonal Tooling | Octagon to Round Transition Block Assembly

45B-25M (-10E) 45mm Octagon to 25mm or 1 in. Round

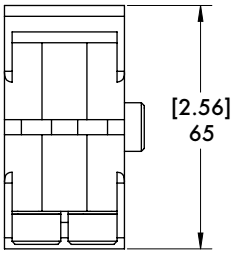

Specifications:
Max. Static Clamp Load:
407 Nm [300 ft-lb]
Material: High Strength Aluminum

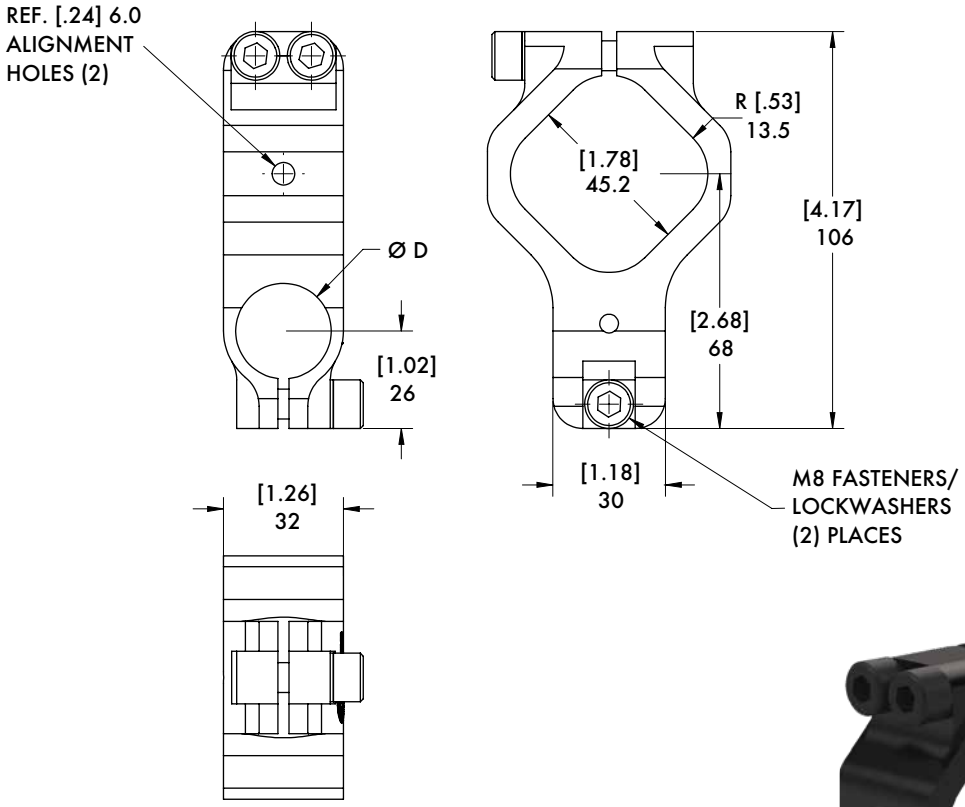



Model Number	Weight	ØD
M-45B-25M-M	239g [0.53lbs]	25mm
M-45B-10E-M	237g [0.52lbs]	1 in.

Dimensions and technical information are subject to change without notice

BODYBUILDER™ SQUARE CLAMPS

BodyBuilder™ Octagonal Tooling | Dimensions | Technical Specifications

60B-25M 60mm Octagon to 25mm Round

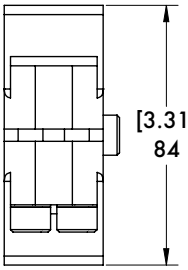

Specifications:
Max. Static Clamp Load:
407 Nm [300 ft-lb]
Material: High Strength Aluminum

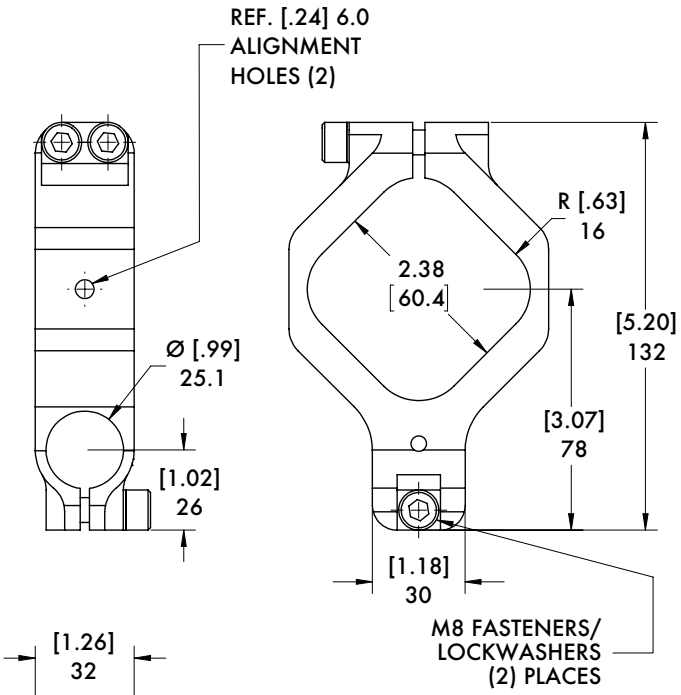

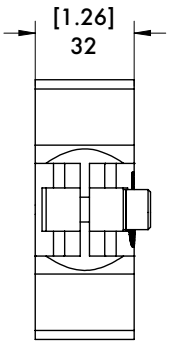



Model Number	Weight
M-60B-25M-M	356g [0.78lbs]

60B-40M (-15E) 60mm Octagon to 40mm or 1.5 in. Round

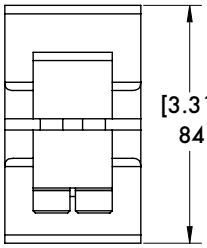

Specifications:
Max. Static Clamp Load:
813 Nm [600 ft-lb]
Material: High Strength Aluminum

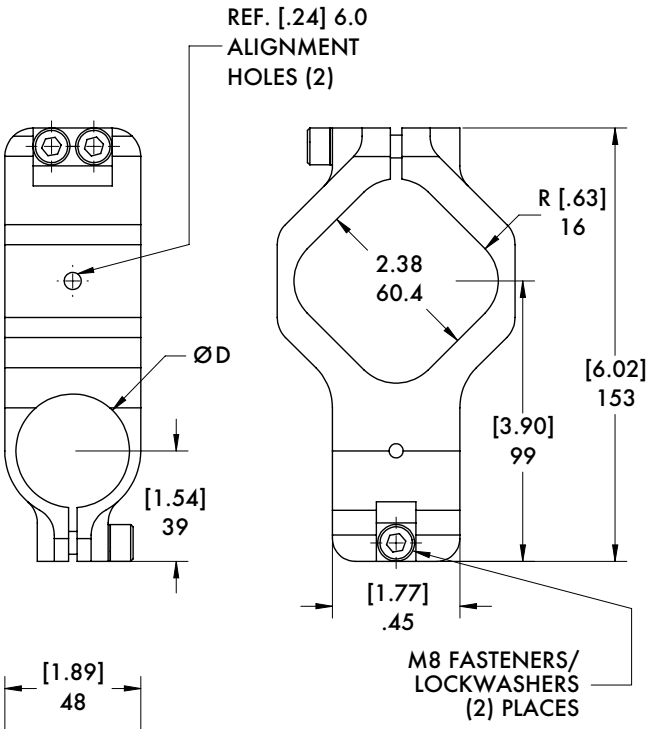

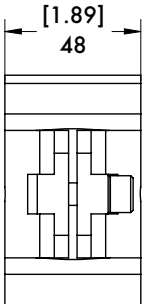



Model Number	Weight	ØD
M-60B-40M-M	520g [1.15lbs]	40mm
M-60B-15E-M	535g [1.18lbs]	1.5 in.

BODYBUILDER™ TRANSITION BRACKETS AND BLOCKS

BodyBuilder™ Octagonal Tooling | Dimensions | Technical Specifications

CLM-30B-50 30mm Octagon to Ø50"(in) Round Transition Bracket Assembly

Features:

- Connects BodyBuilder™ extrusion and round tubing perpendicular to each other.
- Lightweight, high-strength aluminum design.

Specifications:

Max. Static Clamp Load:
102 Nm [75 ft-lb]
Material: Aluminum

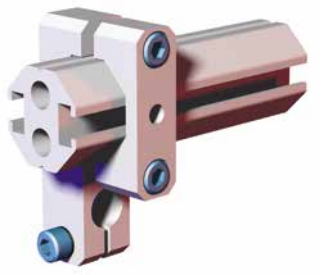

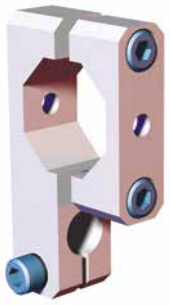

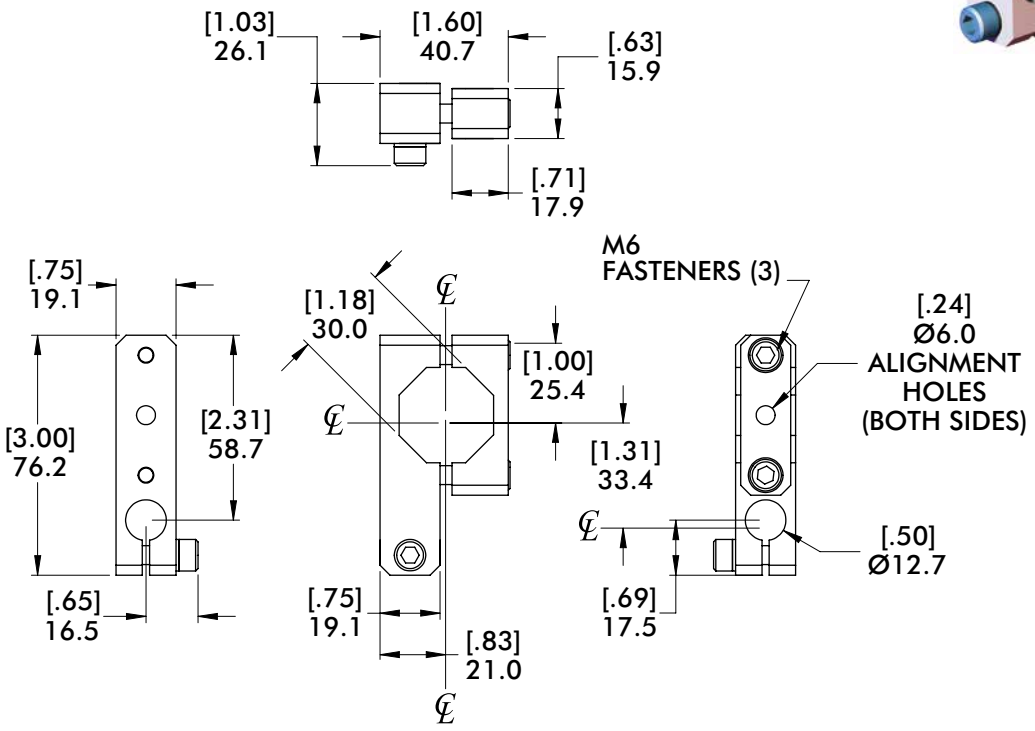

Model Number	Weight
CPI-CLM-30B-50-TR	.092 kg [.20 lb]

TCAM-30B-30B 30mm to 30mm Octagon (Micro) T-Clamp Bracket Assembly

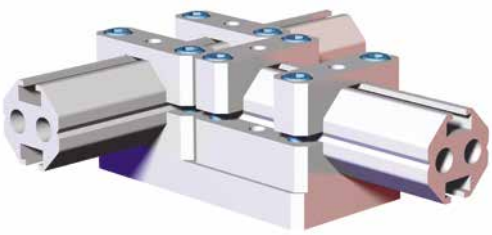

Specifications:
Max. Static Clamp Load:
102 Nm [75 ft-lb]
Material: Aluminum

Features:
- Connects (2) 30mm octagon extrusion perpendicular on the same plane.
- Lightweight, high-strength aluminum design.

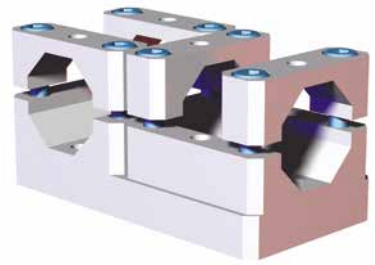

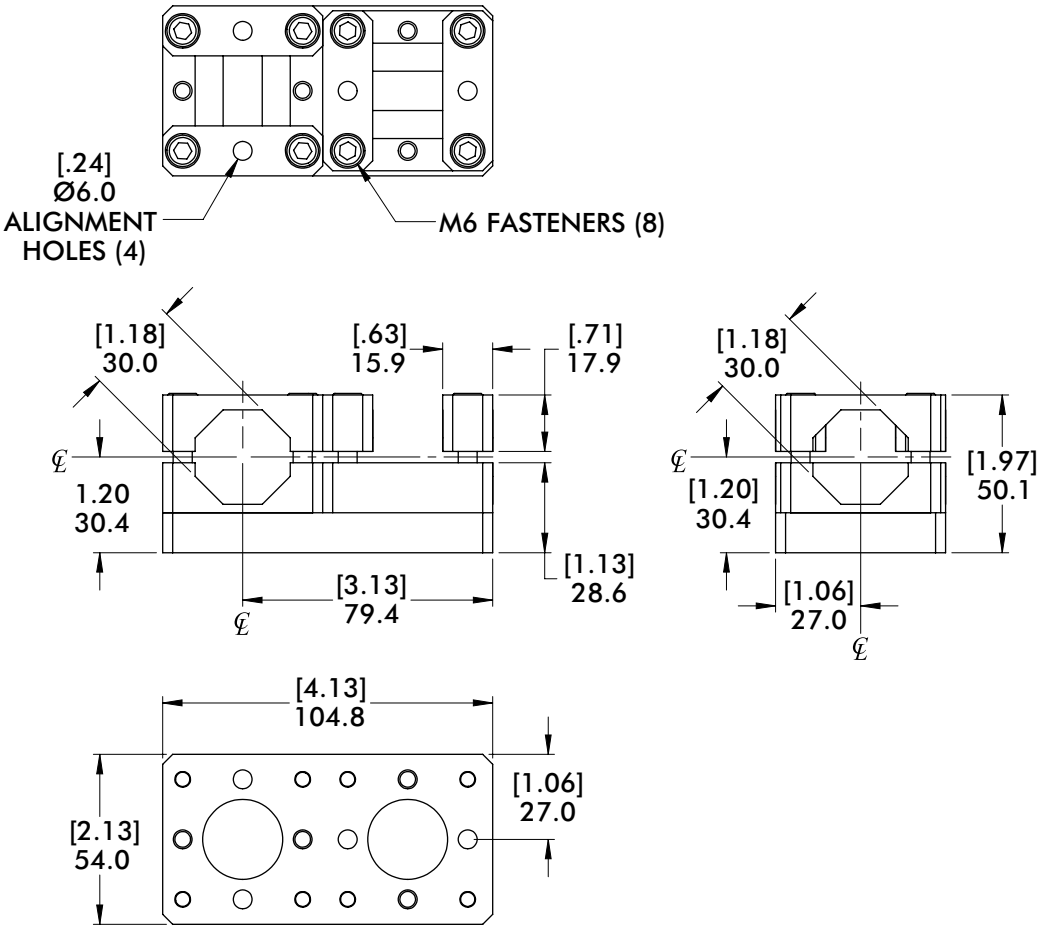

Model Number	Weight
CPI-TCAM-30B-30B-M	.45 kg [.99 lb]

BODYBUILDER™ T-CLAMPS

BodyBuilder™ Octagonal Tooling | Dimensions | Technical Specifications

TCA-30B-45B 30mm to 45mm Octagon T-Clamp Bracket Assembly

Features:

- Connects 30mm and 45mm octagon extrusion perpendicular on the same plane.
- Lightweight, high-strength aluminum design.

Specifications:

Max. Static Clamp Load:
45mm: 475 Nm [350 ft-lb]
30mm: 271 Nm [200 ft-lb]
Material: Aluminum

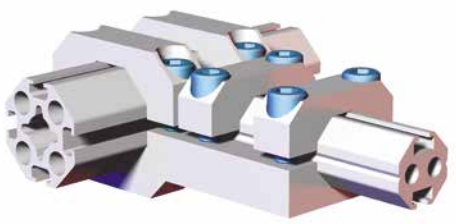

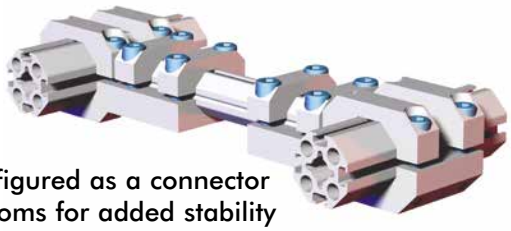

Can be configured as a connector between booms for added stability

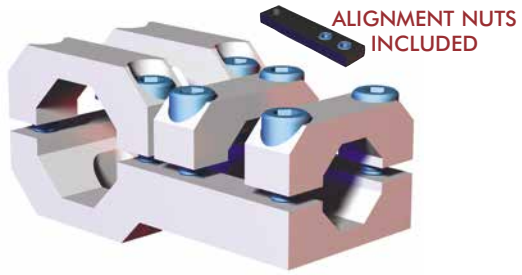

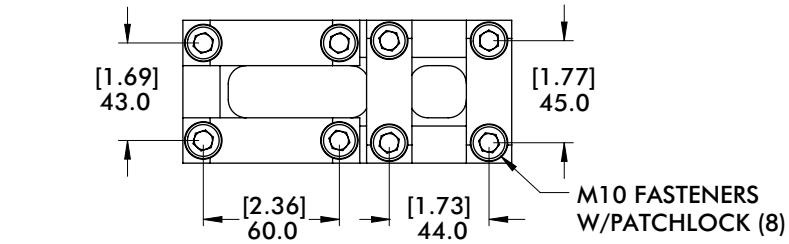

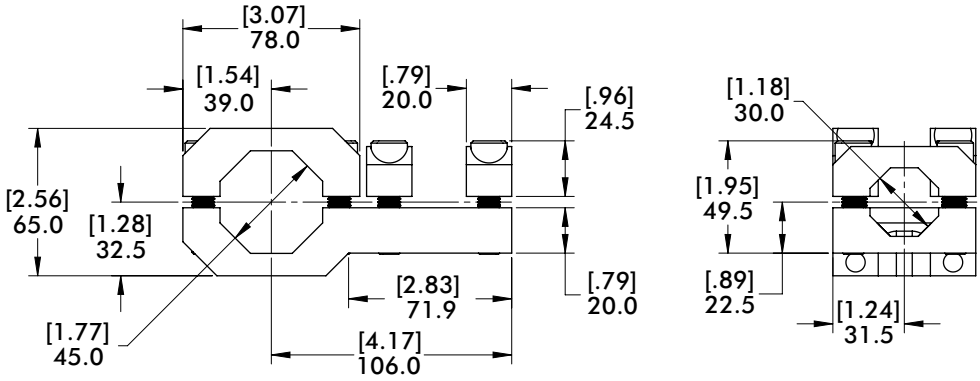

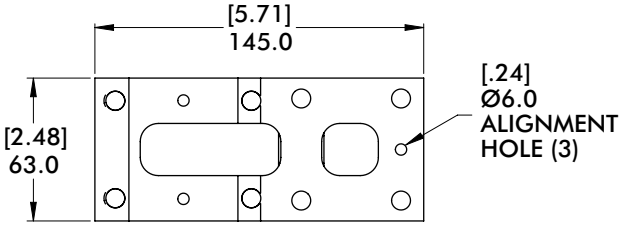

Model Number	Weight
CPI-TCA-30B-45B	.80 kg [1.76 lb]

Dimensions and technical information are subject to change without notice

TCA-30B-60B 30mm to 60mm Octagon T-Clamp Bracket Assembly

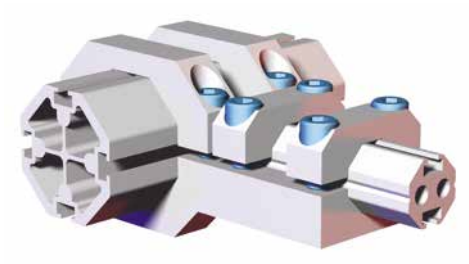

Specifications:
Max. Static Clamp Load:
60mm: 746 Nm [550 ft-lb]
30mm: 271 Nm [200 ft-lb]
Material: Aluminum

Features:
- Connects 30mm and 60mm octagon extrusion perpendicular on the same plane.
- Lightweight, high-strength aluminum design.

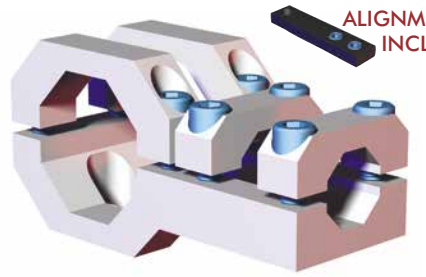

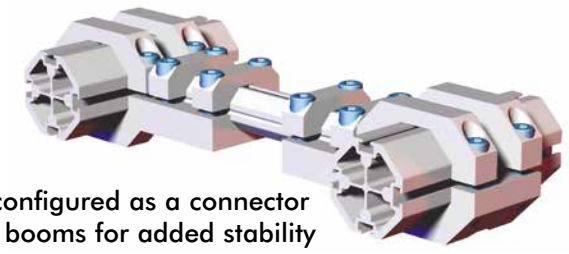

Can be configured as a connector between booms for added stability

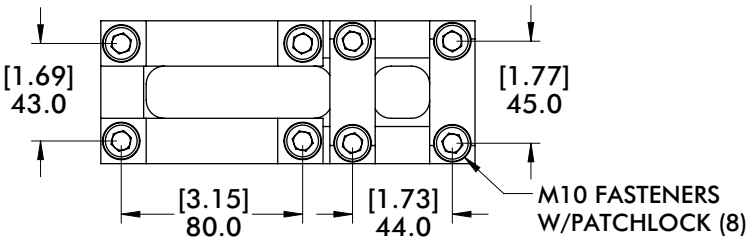

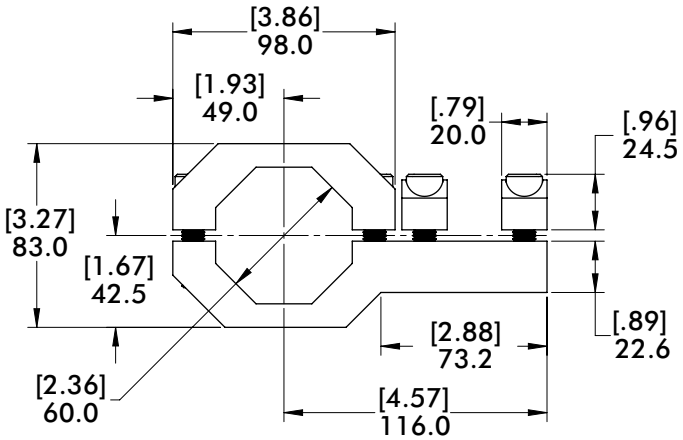

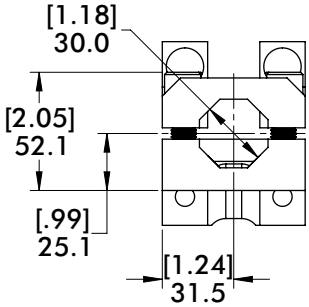

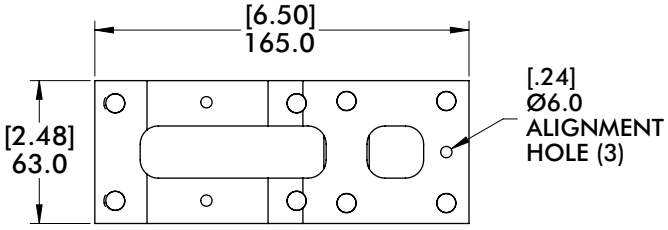

Model Number	Weight
CPI-TCA-30B-60B	1.23 kg [2.71 lb]

BODYBUILDER™ T-CLAMPS

BodyBuilder™ Octagonal Tooling | Dimensions | Technical Specifications

TCA-45B-30B 45mm to 30mm Octagon T-Clamp Bracket Assembly

Features:

- Connects 45mm and 30mm octagon extrusion perpendicular on the same plane.
- Lightweight, high-strength aluminum design.

Specifications:

Max. Static Clamp Load:
45mm: 475 Nm [350 ft-lb]
30mm: 271 Nm [200 ft-lb]
Material: Aluminum

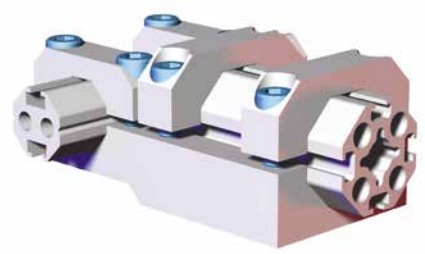

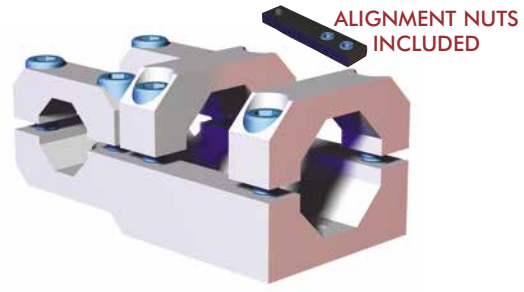

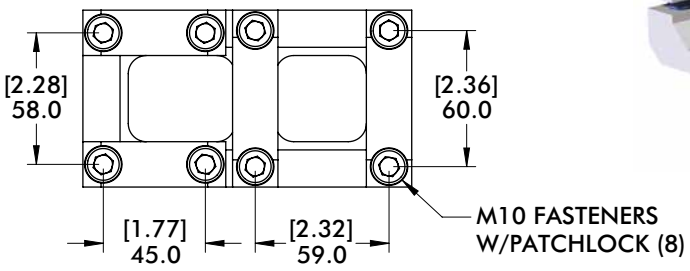

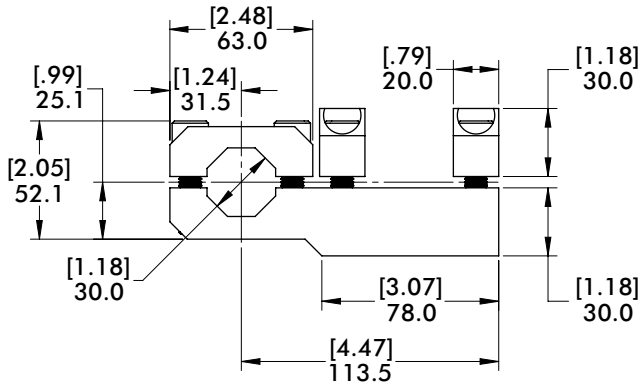

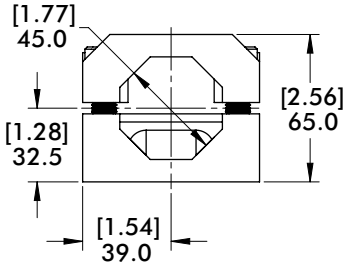

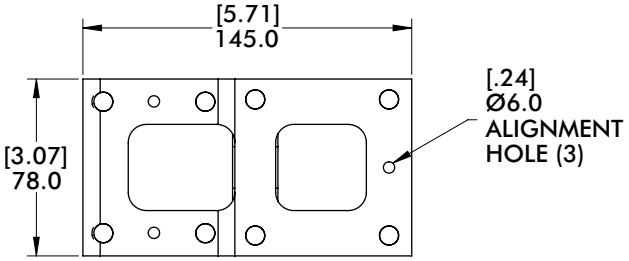

Model Number	Weight
CPI-TCA-45B-30B	.91 kg [2.02 lb]

Dimensions and technical information are subject to change without notice

TCA-45B-45B 45mm to 45mm Octagon T-Clamp Bracket Assembly

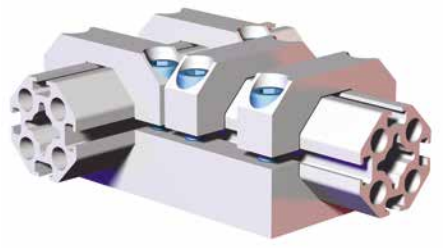

Specifications:
Max. Static Clamp Load:
45mm: 475 Nm [350 ft-lb]
Material: Aluminum

Features:
- Connects (2) 45mm octagon extrusion perpendicular on the same plane.
- Lightweight, high-strength aluminum design.

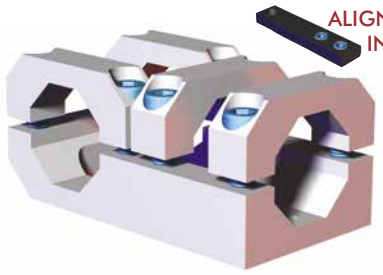

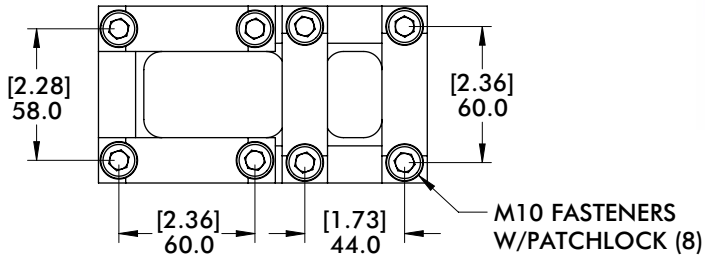

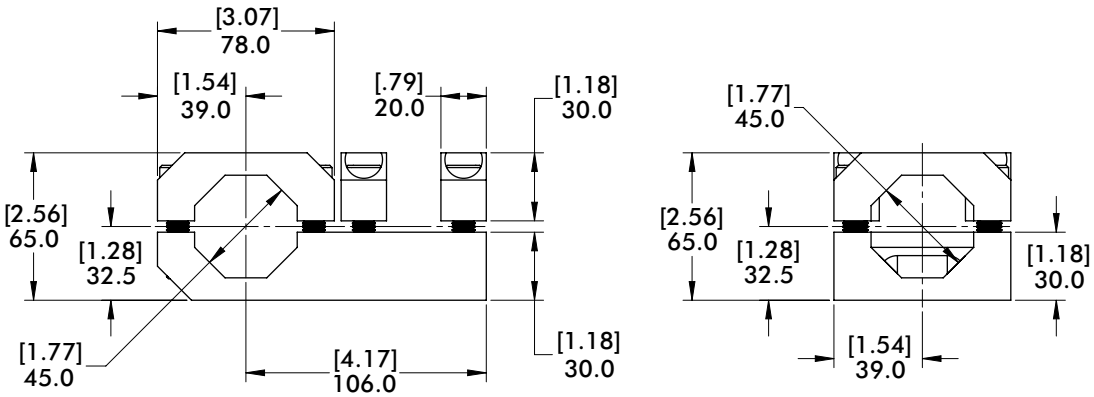

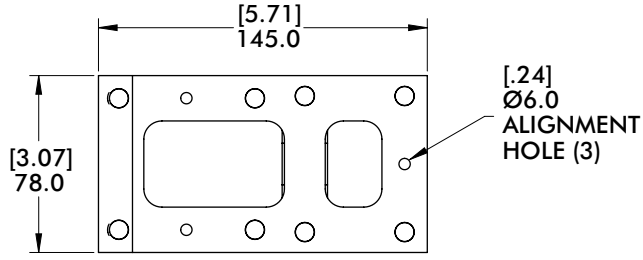

Model Number	Weight
CPI-TCA-45B-45B	.95 kg [2.09 lb]

BODYBUILDER™ T-CLAMPS

BodyBuilder™ Octagonal Tooling | Dimensions | Technical Specifications

TCA-45B-60B 45mm to 60mm Octagon T-Clamp Bracket Assembly

Features:

- Connects 45mm and 60mm octagon extrusion perpendicular on the same plane.
- Lightweight, high-strength aluminum design.

Specifications:

Max. Static Clamp Load:
60mm: 746 Nm [550 ft-lb]
45mm: 475 Nm [350 ft-lb]
Material: Aluminum

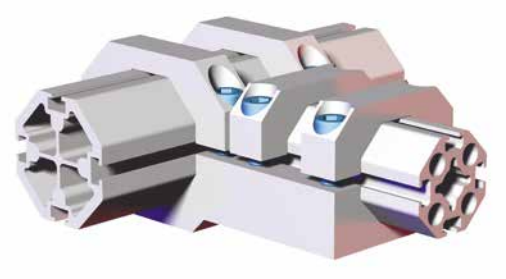

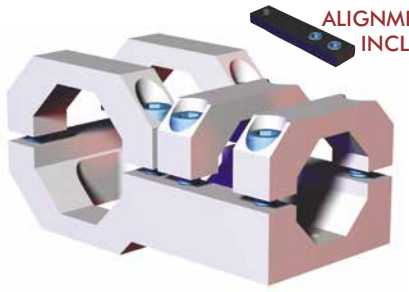

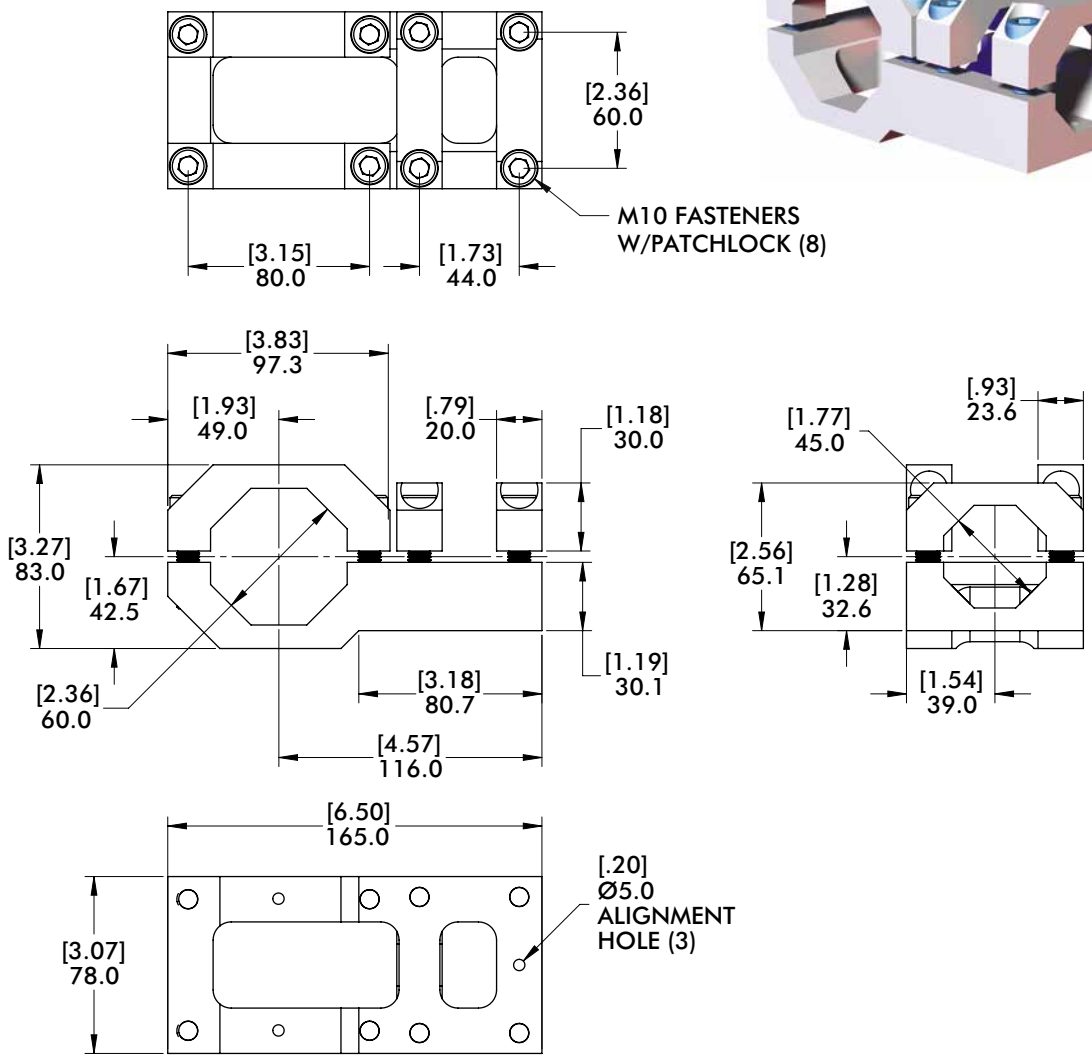

Model Number	Weight
CPI-TCA-45B-60B	1.21 kg [2.67lb]

Dimensions and technical information are subject to change without notice

TCA-45B-25M 45mm Octagon to 25mm Round T-Clamp Bracket Assembly

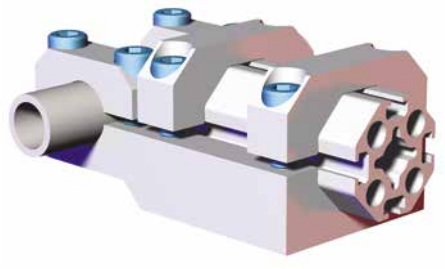

Specifications:
Max. Static Clamp Load:
45mm: 475 Nm [350 ft-lb]
25mm: 271 Nm [200 ft-lb]
Material: Aluminum

Features:
- Connects 45mm octagon and 25mm round perpendicular on the same plane.
- Lightweight, high-strength aluminum design.

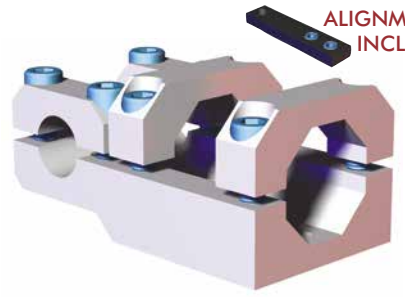

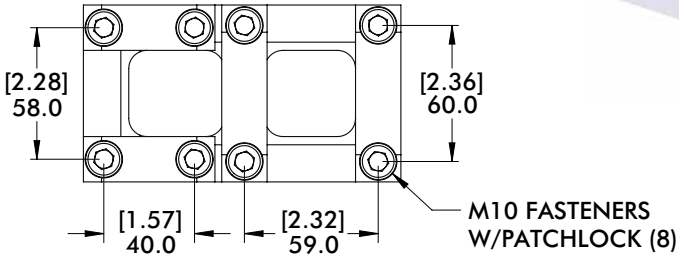

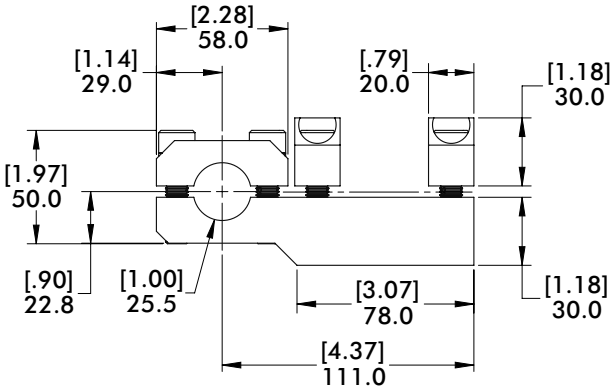

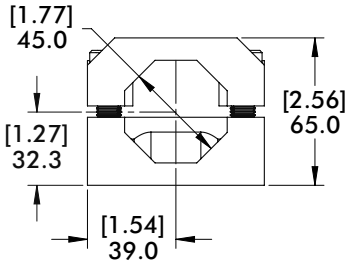

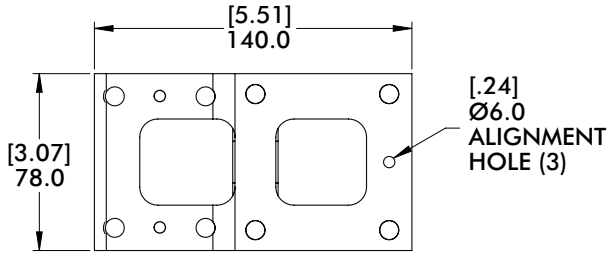

Model Number	Weight
CPI-TCA-45B-25M	.89 kg [1.97lb]

BODYBUILDER™ T-CLAMPS

BodyBuilder™ Octagonal Tooling | Dimensions | Technical Specifications

TCA-60B-30B 60mm to 30mm octagon T-Clamp Bracket Assembly

Features:

- Connects 60mm and 30mm octagon extrusion perpendicular on the same plane.
- Lightweight, high-strength aluminum design.

Specifications:

Max. Static Clamp Load:
60mm: 746 Nm [550 ft-lb]
30mm: 271 Nm [200 ft-lb]
Material: Aluminum

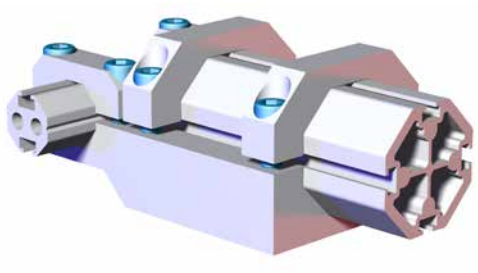



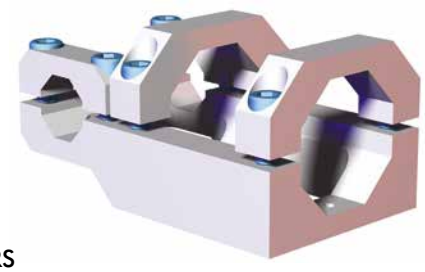

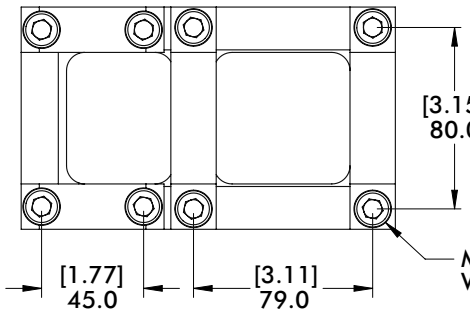

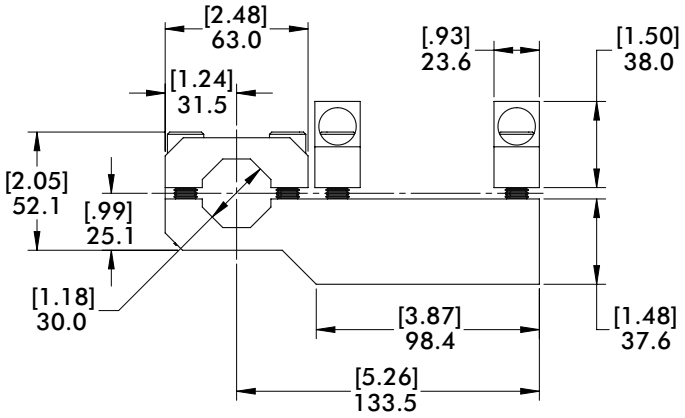

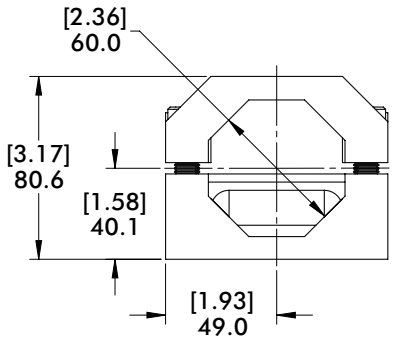

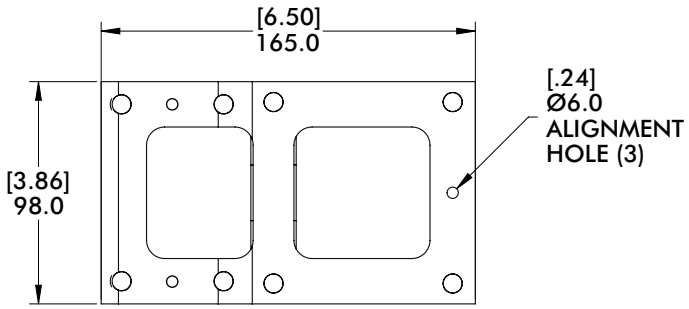

Model Number	Weight
CPI-TCA-60B-30B	1.32 kg [2.91 lb]

Dimensions and technical information are subject to change without notice

TCA-60B-45B 60mm to 45mm octagon T-Clamp Bracket Assembly

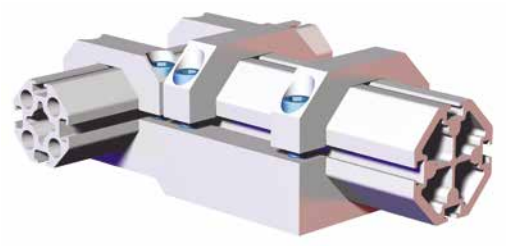

Specifications:

Max. Static Clamp Load:
60mm: 746 Nm [550 ft-lb]
45mm: 475 Nm [350 ft-lb]
Material: Aluminum

Features:

- Connects 60mm and 45mm octagon extrusion perpendicular on the same plane.
- Lightweight, high-strength aluminum design.

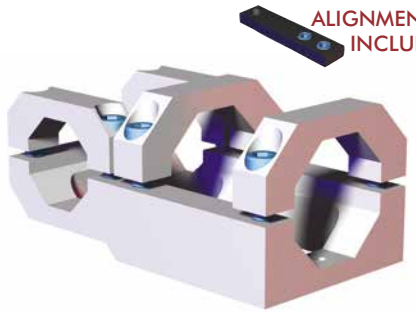

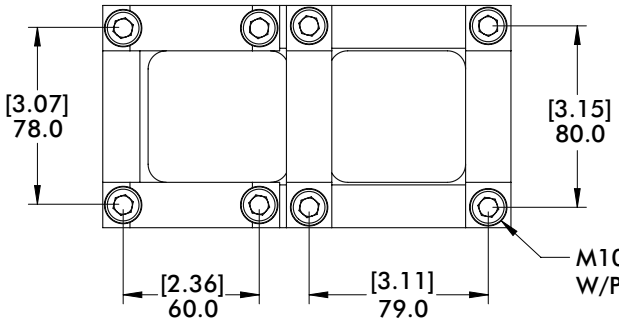

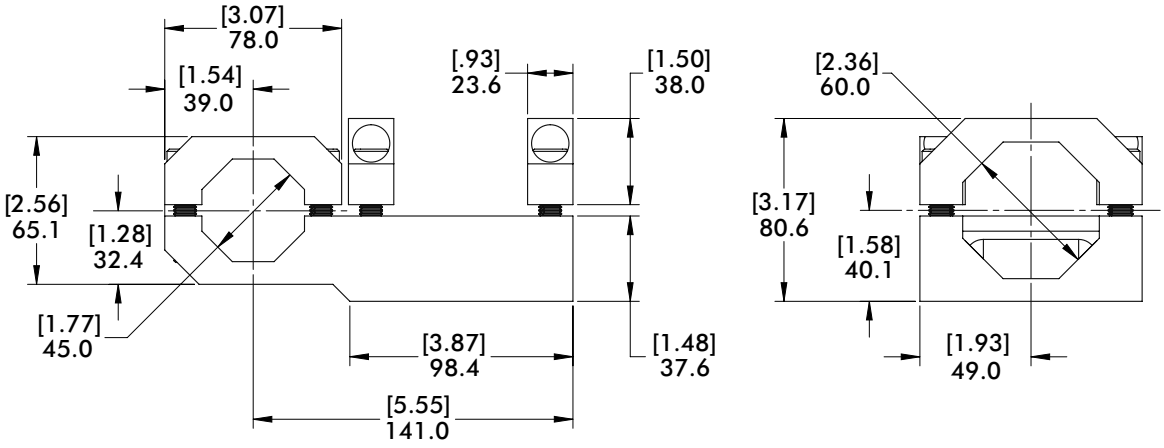

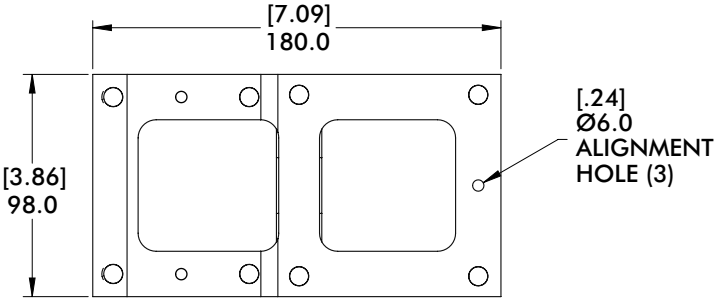

Model Number	Weight
CPI-TCA-60B-45B	1.45 kg [3.20 lb]

BODYBUILDER™ T-CLAMPS

BodyBuilder™ Octagonal Tooling | Dimensions | Technical Specifications

TCA-60B-60B 60mm to 60mm octagon T-Clamp Bracket Assembly

Features:

- Connects (2) 60mm octagon extrusions perpendicular on the same plane.
- Lightweight, high-strength aluminum design.

Specifications:

Max. Static Clamp Load:
60mm: 746 Nm [550 ft-lb]
Material: Aluminum

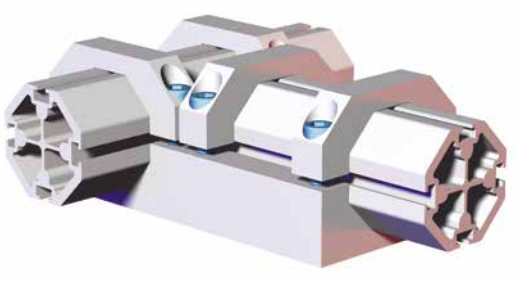

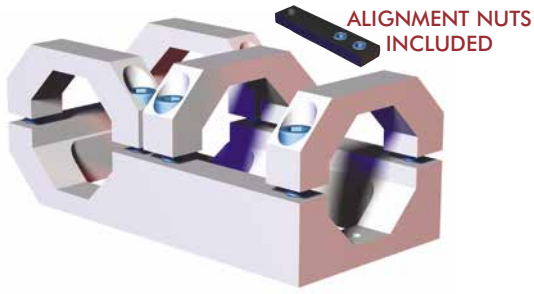

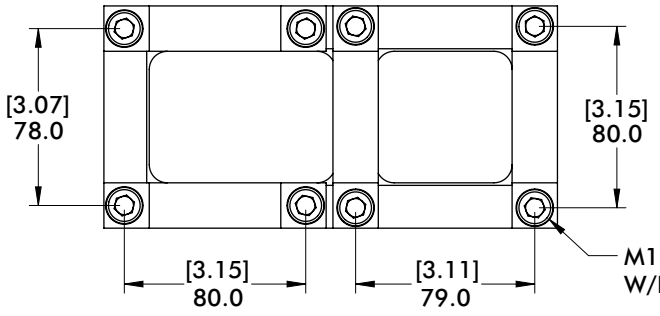

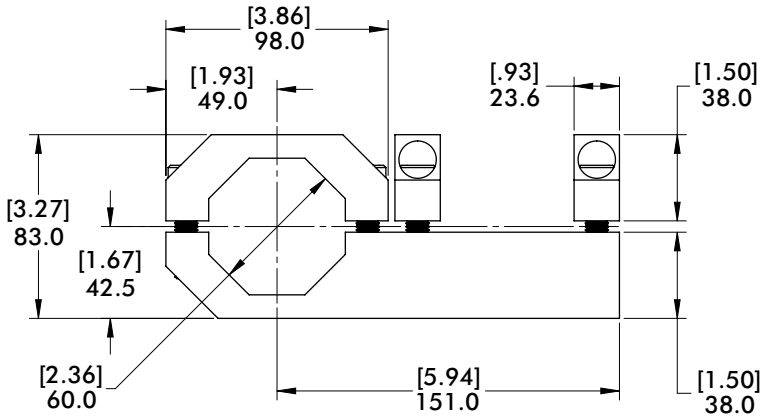

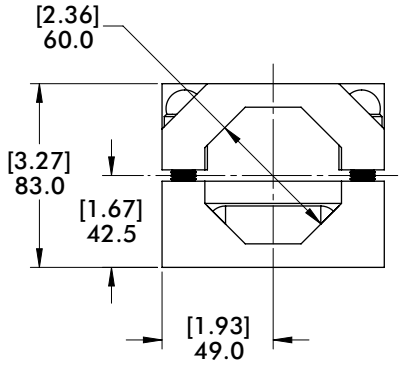

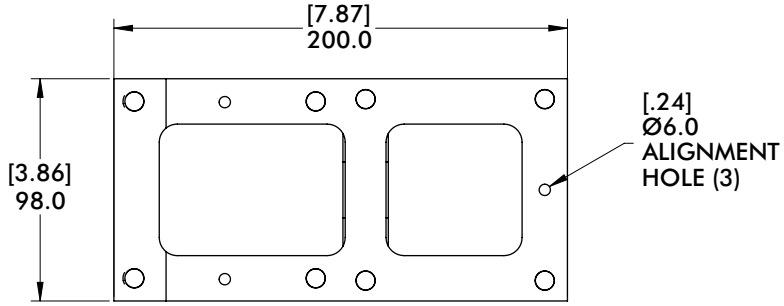

Model Number	Weight
CPI-TCA-60B-60B	1.77 kg [3.90 lb]

Dimensions and technical information are subject to change without notice

TCA-60B-25M 60mm Octagon to 25mm Round T-Clamp Bracket Assembly

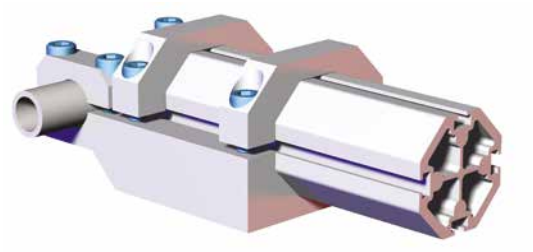

Specifications:
Max. Static Clamp Load:
60mm: 746 Nm [550 ft-lb]
30mm: 271 Nm [200 ft-lb]
Material: Aluminum

Features:
- Connects 60mm octagon and 25mm round perpendicular on the same plane.
- Lightweight, high-strength aluminum design.

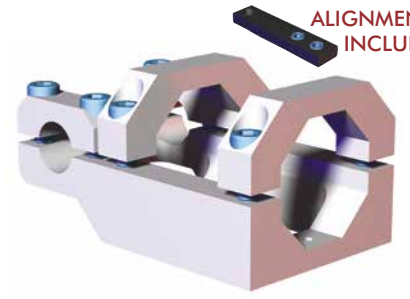

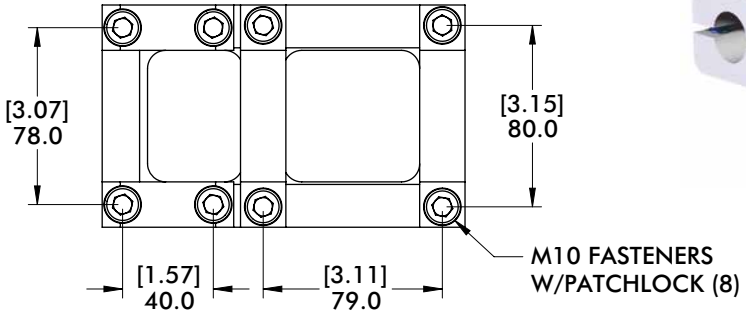

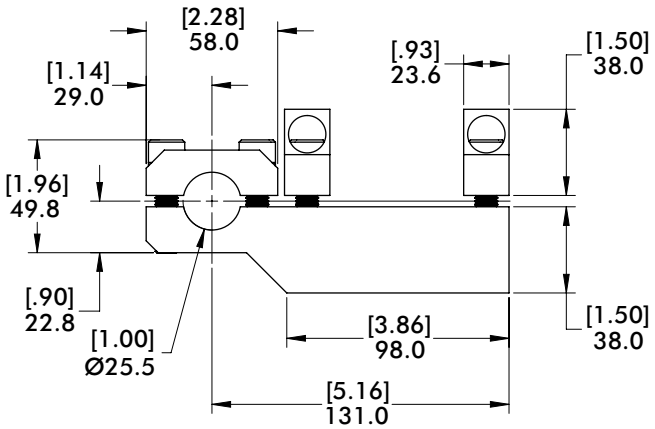

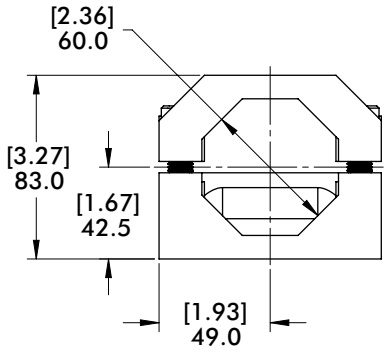

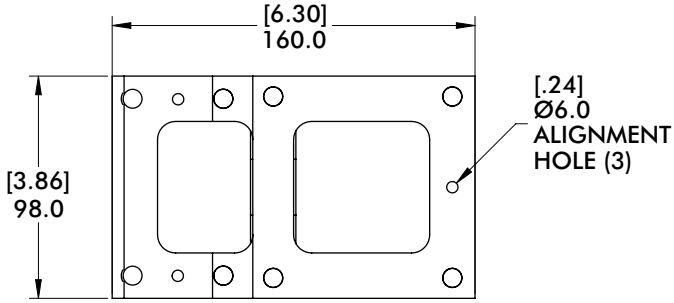

Model Number	Weight
CPI-TCA-60B-25M	1.25 kg [2.76 lb]

BODYBUILDER™ T-CLAMPS

BodyBuilder™ Octagonal Tooling | Dimensions | Technical Specifications

TCA-25M-45B 25mm Round to 45mm Octagon T-Clamp Brackets Assembly

Features:

- Connects 25mm round and 45mm octagon perpendicular on the same plane.
- Lightweight, high-strength aluminum design.

Specifications:

Max. Static Clamp Load:
45mm: 475 Nm [350 ft-lb]
25mm: 271 Nm [200 ft-lb]
Material: Aluminum

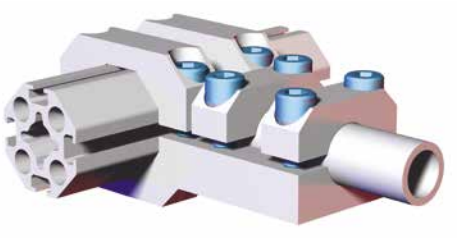

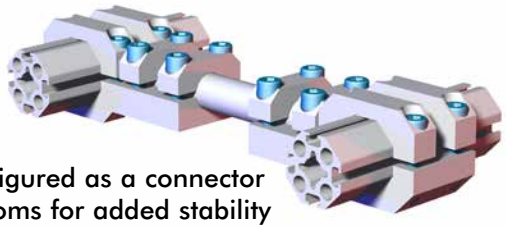

Can be configured as a connector between booms for added stability

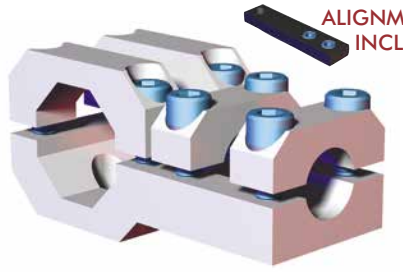

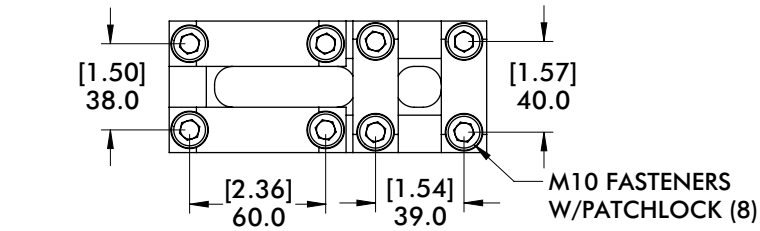

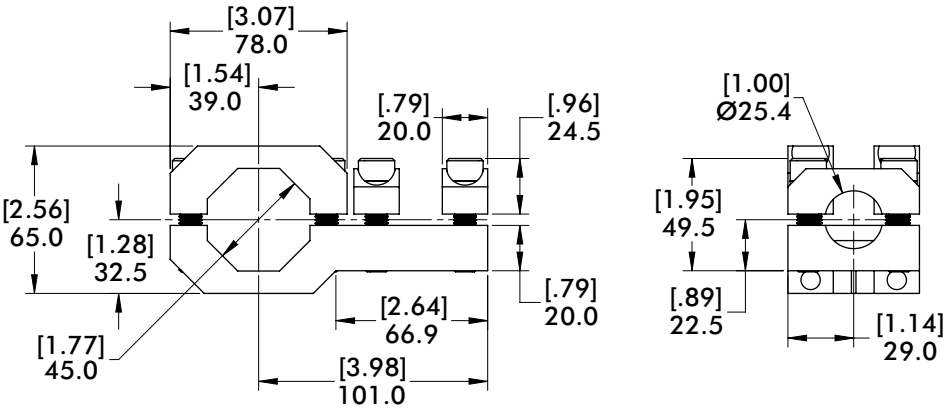

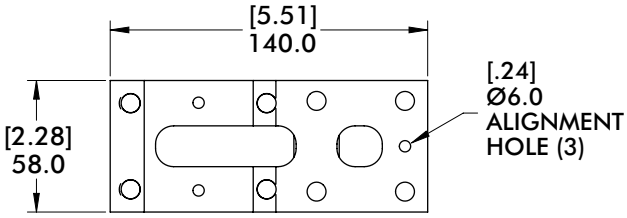

Model Number	Weight
CPI-TCA-25M-45B	.57 kg [1.26 lb]

TCA-25M-60B 25mm Round to 60mm Octagon T-Clamp Bracket Assembly

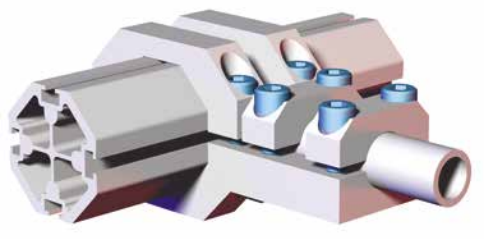

Specifications:
Max. Static Clamp Load:
60mm: 746 Nm [550 ft-lb]
25mm: 271 Nm [200 ft-lb]
Material: Aluminum

Features:
- Connects 25mm round and 60mm octagon perpendicular on the same plane.
- Lightweight, high-strength aluminum design.

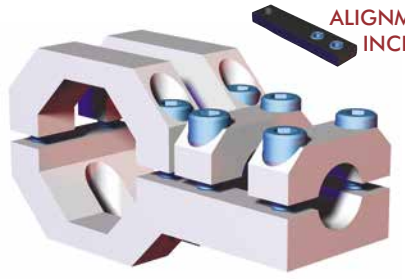

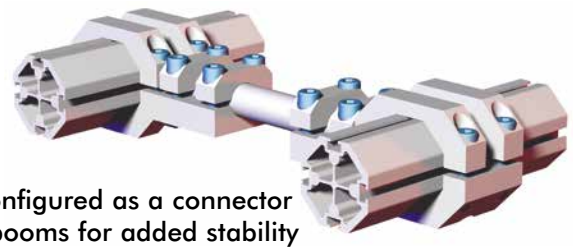

Can be configured as a connector between booms for added stability

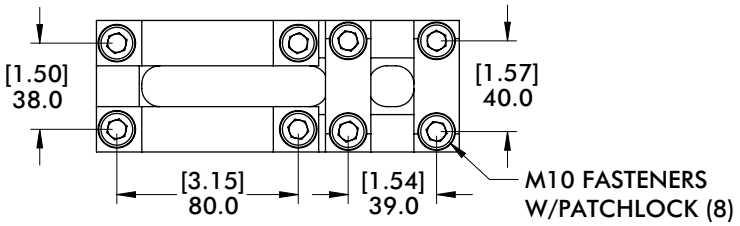

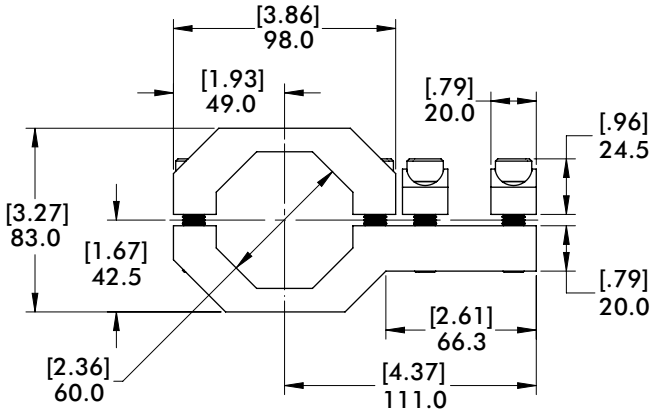

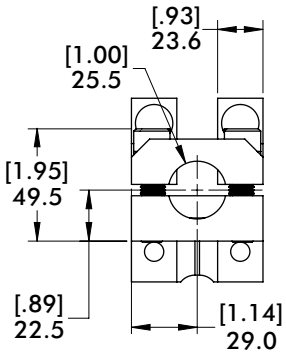

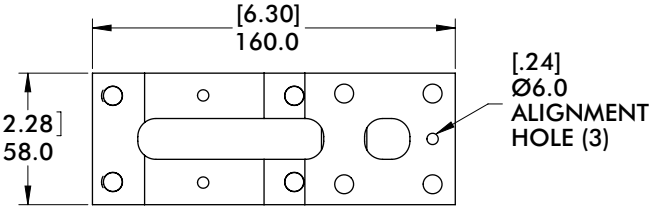

Model Number	Weight
CPI-TCA-25M-60B	.85 kg [1.87 lb]

BODYBUILDER™ ELBOWS

BodyBuilder™ Octagonal Tooling | Dimensions | Technical Specifications

45° Angular Boom Clamp Brackets

Features:
- Mounts (2) Bodybuilder extrusion booms inline at a 45° angle.

Specifications:
Material: Aluminum

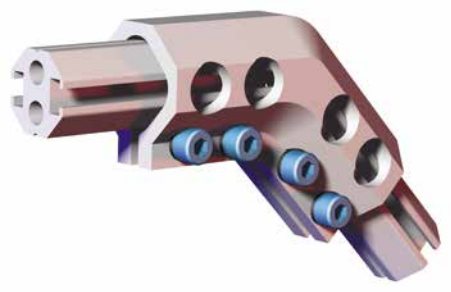

DC-3030B-45 30mm to 30mm 45° External Boom Clamp Brackets

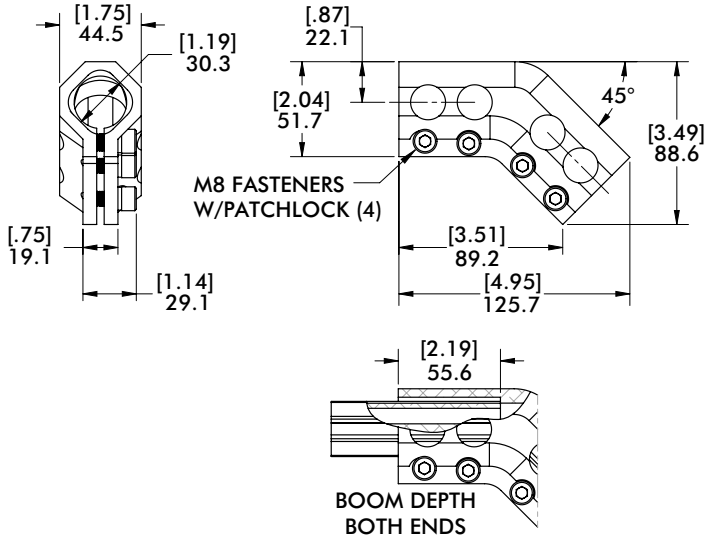

Specifications:
Max. Static Clamp Load:
271Nm [200 ft-lb]

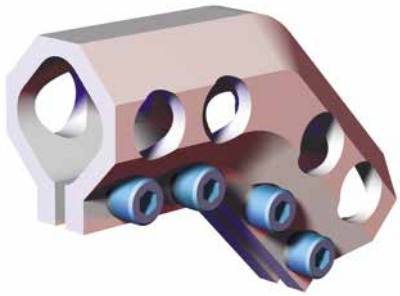

Model Number	Weight
CPI-DC-3030B-45	.30 kg [.66 lb]

DC-4545B-45 45mm to 45mm 45° Angular Boom Clamp Brackets

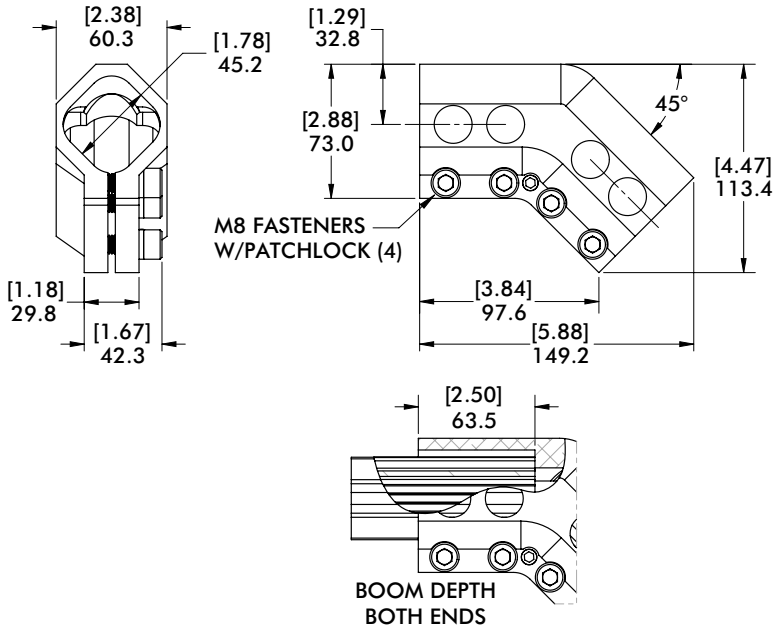

Specifications:
Max. Static Clamp Load:
475 Nm [350 ft-lb]

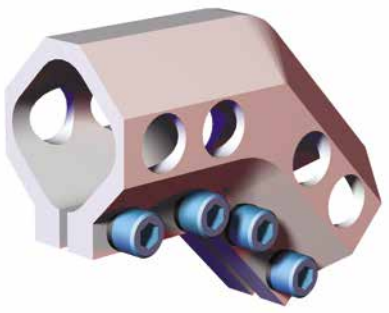

Model Number	Weight
CPI-DC-4545B-45	.64 kg [1.4 lb]

Dimensions and technical information are subject to change without notice

DC-6060B-45 60mm to 60mm 45° Angular Boom Clamp Brackets



Specifications:
Max. Static Clamp Load:
746 Nm [550 ft-lb]
Material: Aluminum

Features:
- Mounts (2) Bodybuilder extrusion booms inline at a 45° angle.

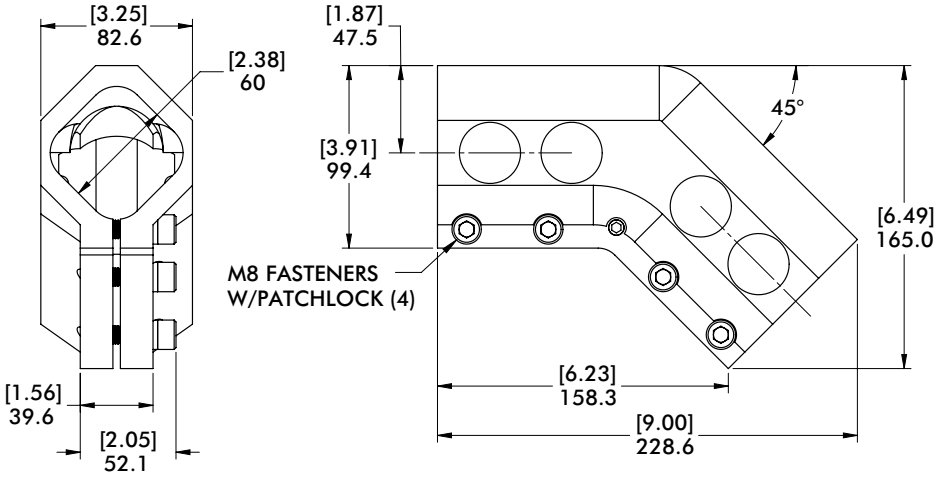

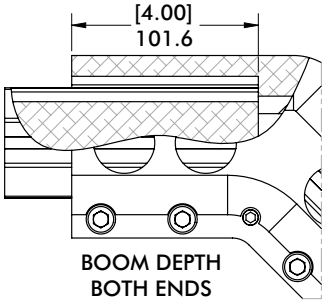

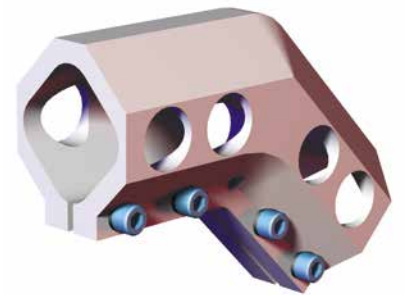

Model Number	Weight
CPI-DC-6060B-45	1.74 kg [3.8 lb]

BODYBUILDER™ MID FLANGE CLAMPS

BodyBuilder™ Octagonal Tooling | Dimensions | Technical Specifications

CLM-30B-152F-90 30mm Mid Flange Clamp Mount

Features:

- Mounts 30mm extrusion parallel to the mounting surface.
- Can be used as robot interface when quick-change connector is not required.

Specifications:

Max. Static Clamp Load:
102 Nm [75 ft-lb]
Material: Cast Aluminum

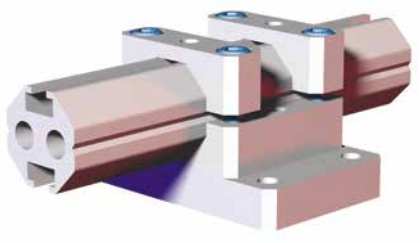

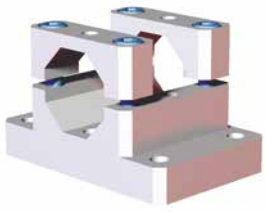

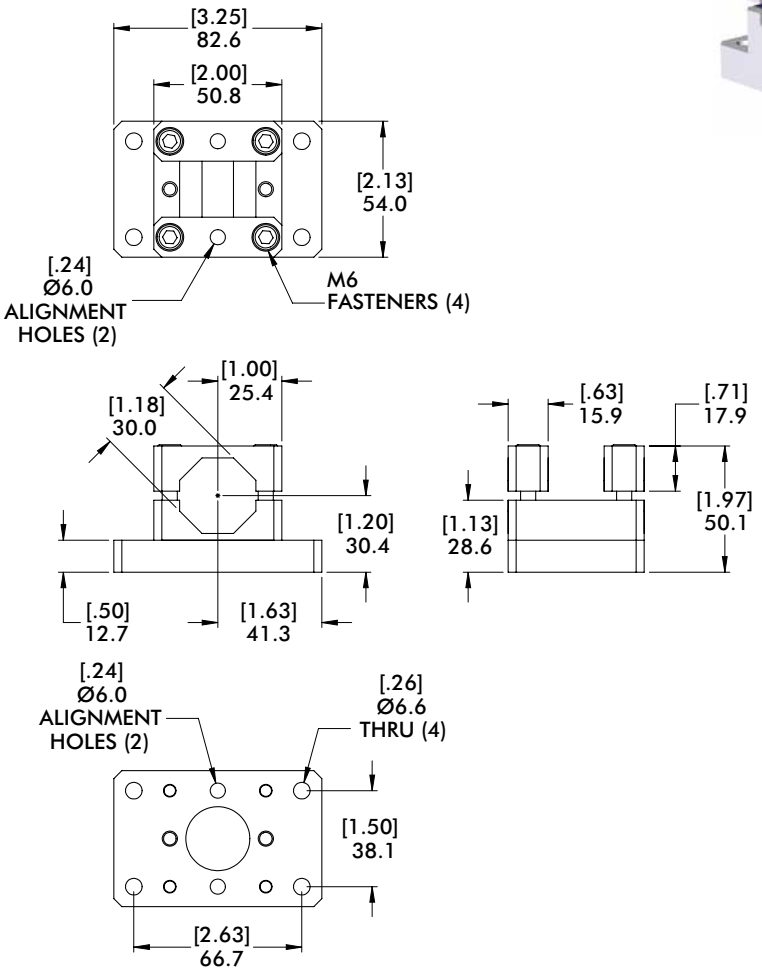

Model Number	Weight
CPI-CLM-30B-152F-90	0.28 kg [.61 lb]

Dimensions and technical information are subject to change without notice

BODYBUILDER™ MID FLANGE CLAMPS

BodyBuilder™ Octagonal Tooling | Dimensions | Technical Specifications

TBC-45 45mm Mid Flange Clamp Mount

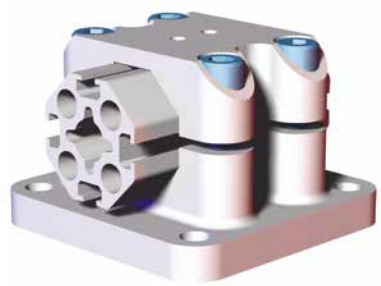

Specifications:
Max. Static Clamp Load:
475 Nm [350 ft-lb]
Material: Aluminum

Features:
- Mounts 45mm extrusion parallel to the mounting surface.
- Can be used as robot interface when quick-change connector is not required.

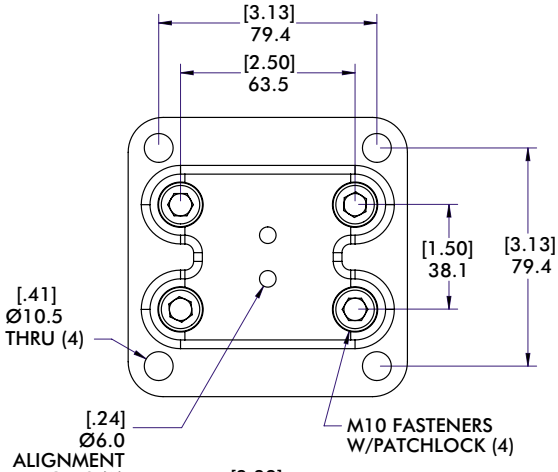

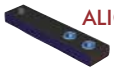

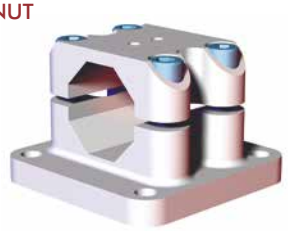

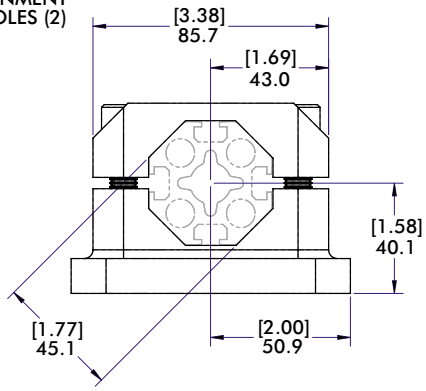

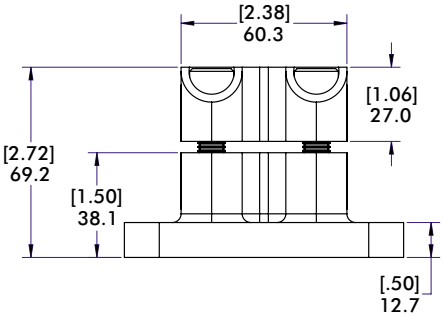

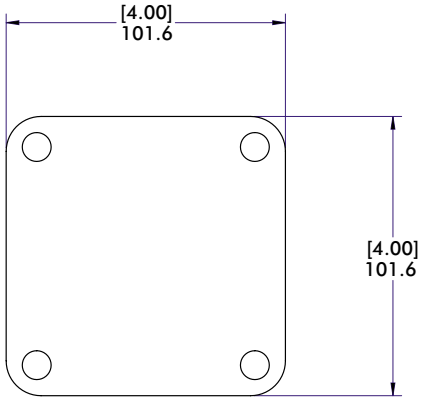

Model Number	Weight
TBC-45-00	0.79 kg [1.74 lb]

BODYBUILDER™ MID FLANGE CLAMPS

BodyBuilder™ Octagonal Tooling | Dimensions | Technical Specifications

TBC-60 60mm Mid Flange Clamp Mount

Features:

- Mounts 60mm extrusion parallel to the mounting surface.
- Can be used to mount to robot with an interface plate.
- Cross-key design provides added strength for high-torque applications when used in conjunction with a slot and key mechanism.

Specifications:

Max. Static Clamp Load:
746 Nm [550 ft-lb]
Material: Cast Aluminum

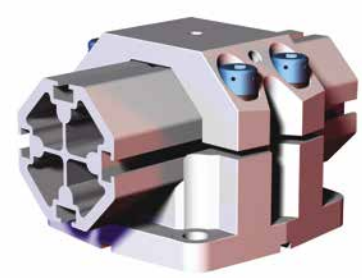

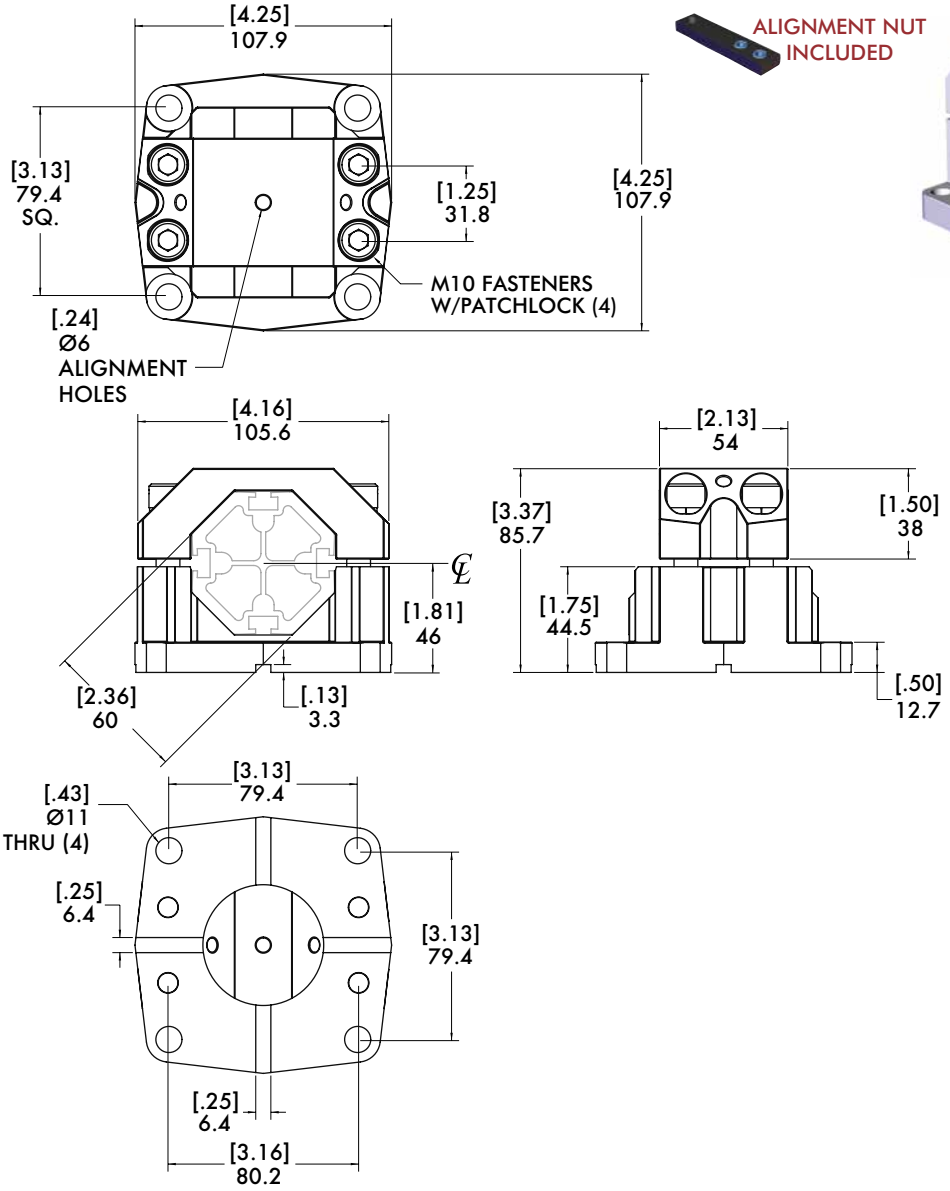

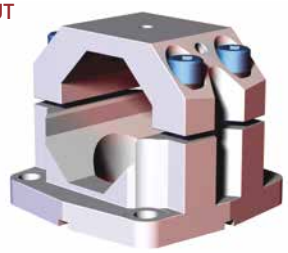

Cross Key sold separately: (2) x 540-25388

Model Number	Weight
TBC-60-00	0.92 kg [2.02 lb]

Dimensions and technical information are subject to change without notice

BODYBUILDER™ END FLANGE CLAMPS

BodyBuilder™ Octagonal Tooling | Dimensions | Technical Specifications

CLM-30B-20F 30mm End Flange Clamp Mount



Specifications:
Max. Static Clamp Load:
102 Nm [75 ft-lb]
Material: Aluminum

Features:
- Mounts 30mm extrusion 90° to the mounting surface.
- Can be used as robot interface when quick-change connector is not required.



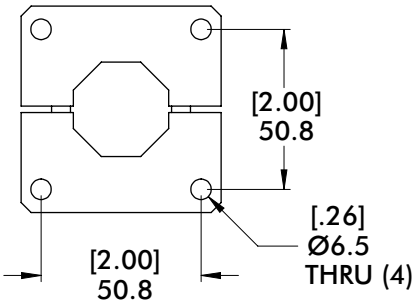

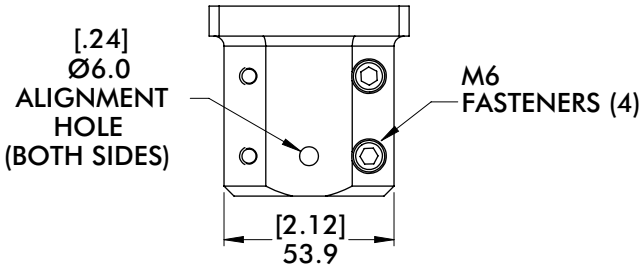

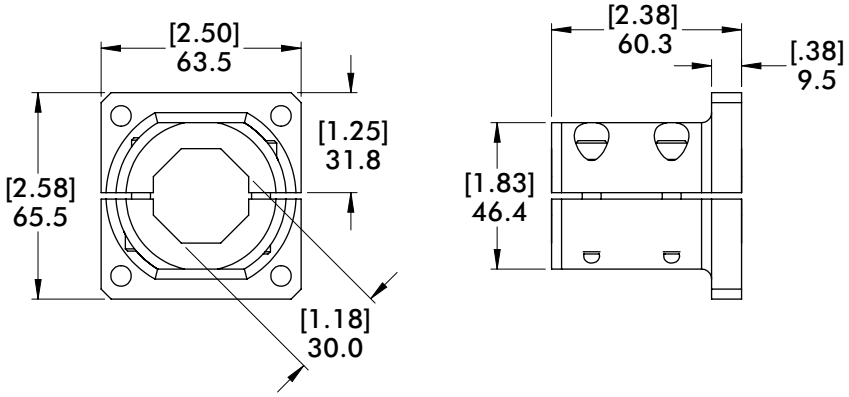

Model Number	Weight
CPI-CLM-30B-20F	.29 kg [.64 lb]

BODYBUILDER™ END FLANGE CLAMPS

BodyBuilder™ Octagonal Tooling | Dimensions | Technical Specifications

BECC-60 60mm End Flange Clamp Mount

Features:

- Mounts 60mm extrusion 90° to the mounting surface.
- Can be used as robot interface when quick-change connector is not required.
- Cross-key design provides added strength for high-torque applications when used in conjunction with a slot and key mechanism.

Specifications:

Max. Static Clamp Load:
746 Nm [550 ft-lb]
Material: Cast Aluminum

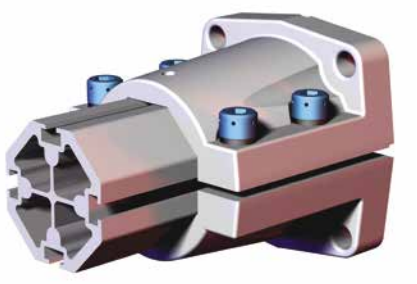

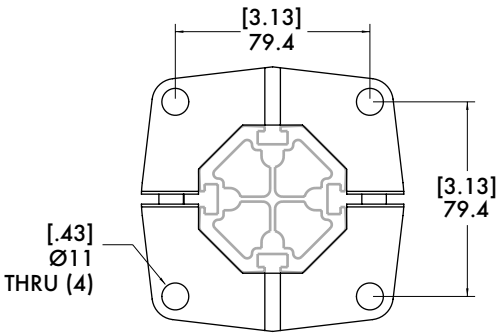



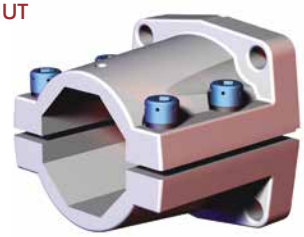

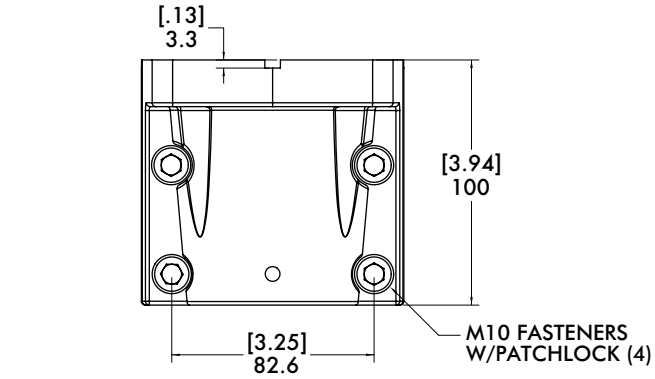

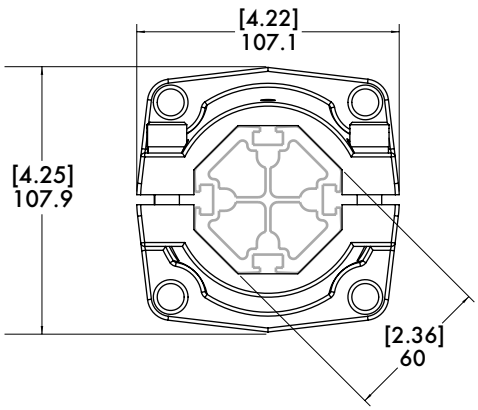

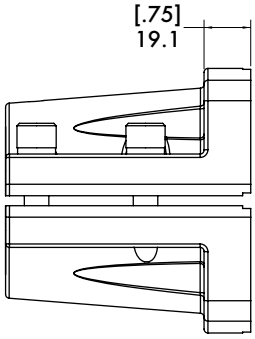

Cross Key sold separately: (2) x 540-25388

Model Number	Weight
BECC-60-00	1.21 kg [2.67 lb]

Dimensions and technical information are subject to change without notice

BODYBUILDER™ ACCESSORY MOUNTS

TPM-30 30mm Accessory Mounting Bracket

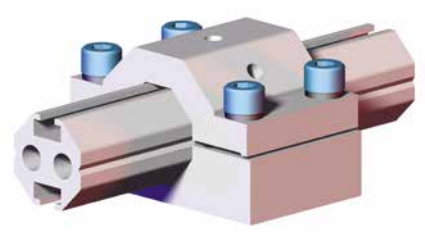

Specifications:
Max. Static Clamp Load:
271 Nm [200 ft-lb]
Material: Aluminum

Features:
- Provides a secure attachment point for clamps and pin locators.

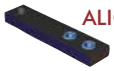

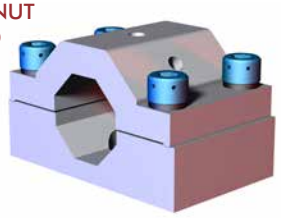

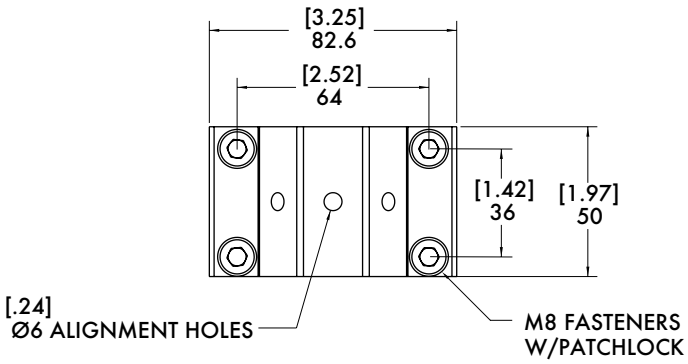

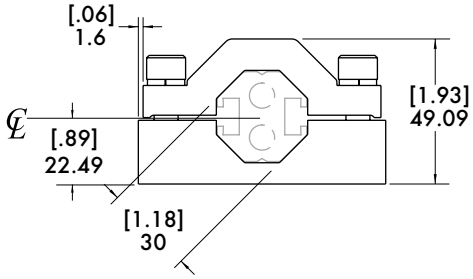

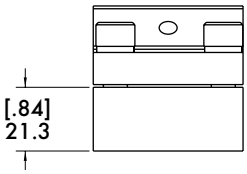

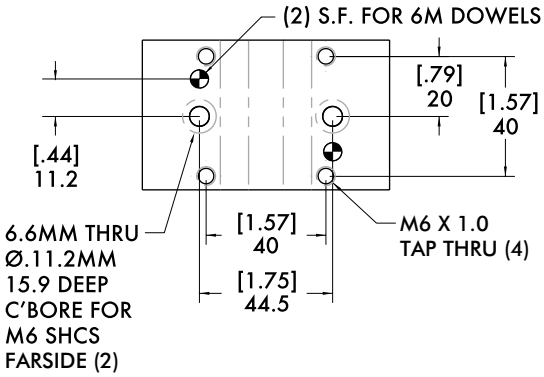

Model Number	Weight
TPM-30	.36 kg [.80 lb]

BODYBUILDER™ ACCESSORY MOUNTS

BodyBuilder™ Octagonal Tooling | Dimensions | Technical Specifications

TPM(S)-45 45mm Accessory Mounting Bracket

Features:

- Provides a secure attachment point for clamps and pin locators.
- Standard NAAMS mounting patterns.

Specifications:

Max. Static Clamp Load:
475 Nm [350 ft-lb]
Material:
TPMS-45: Steel
TPM-45: Aluminum



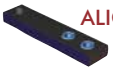

ALIGNMENT NUT INCLUDED



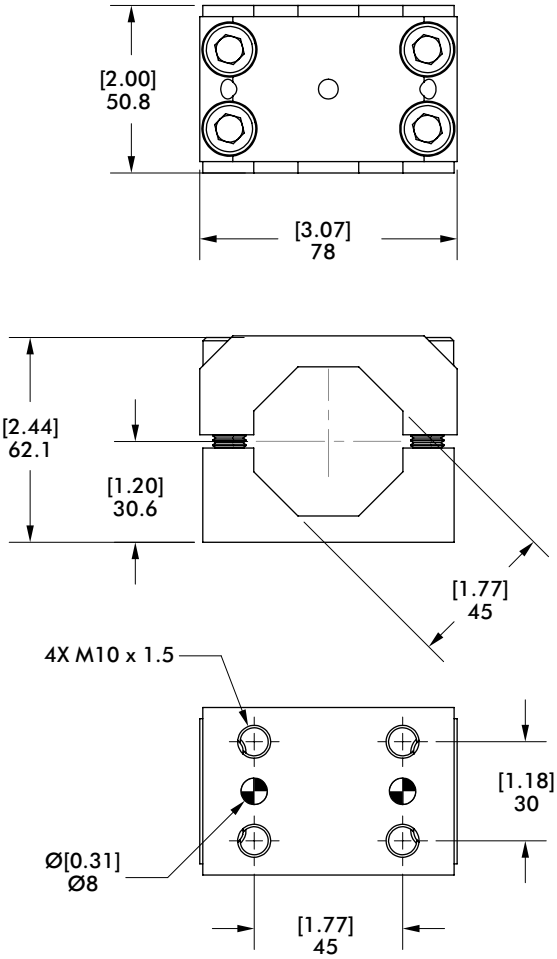

Model Number	Weight
TPM-45 (Aluminum)	.48 kg [1.28 lb]
TPMS-45 (Steel)	1.10 kg [2.90 lb]

Dimensions and technical information are subject to change without notice

BODYBUILDER™ ACCESSORY MOUNTS

TPMS-60 60mm Accessory Mounting Bracket.



Specifications:
Max. Static Clamp Load:
746 Nm [550 ft-lb]
Material: Steel

Features:
- Provides a secure attachment point for clamps and pin locators.
- Standard NAAMS mounting patterns.

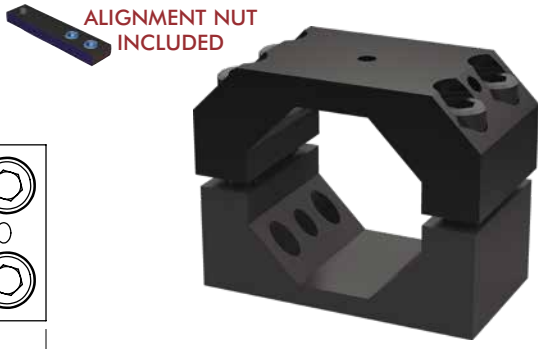

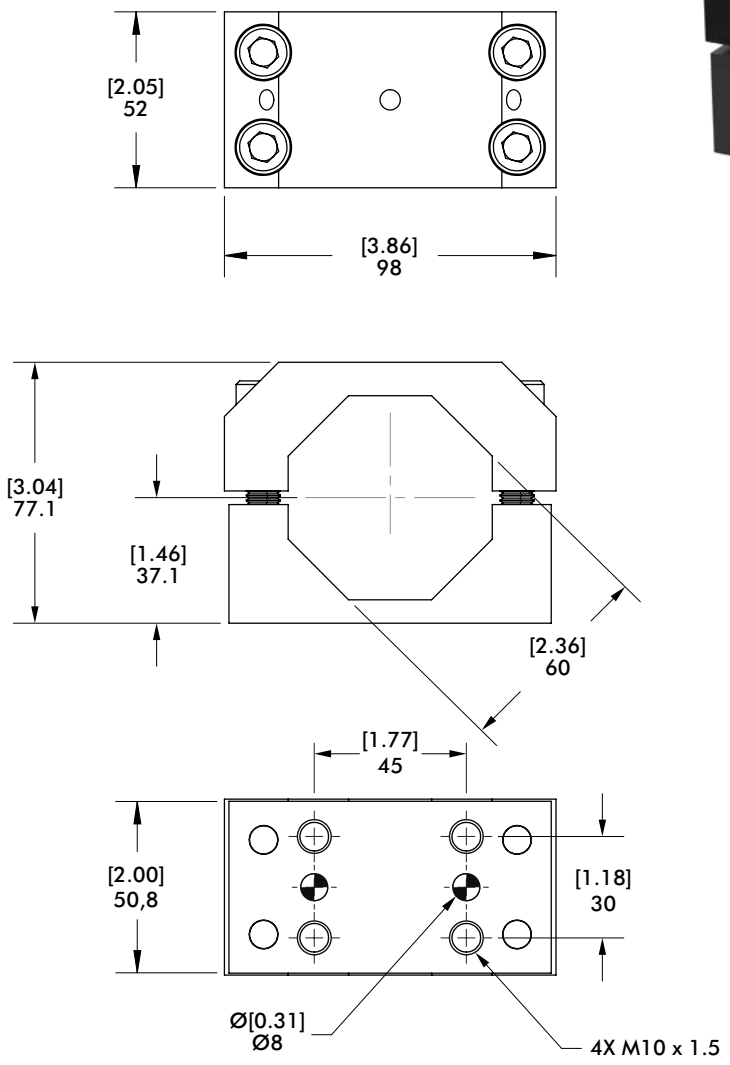

Model Number	Weight
TPMS-60	1.3 kg [2.90 lb]

BODYBUILDER™ ACCESSORY MOUNTS

BodyBuilder™ Octagonal Tooling | Dimensions | Technical Specifications

TPMS-90 90mm Accessory Mounting Bracket

Features:

- Provides a secure attachment point for clamps and pin locators.

Specifications:

Max. Static Clamp Load:
746 Nm [550 ft-lb]
Material: Steel





ALIGNMENT NUT INCLUDED



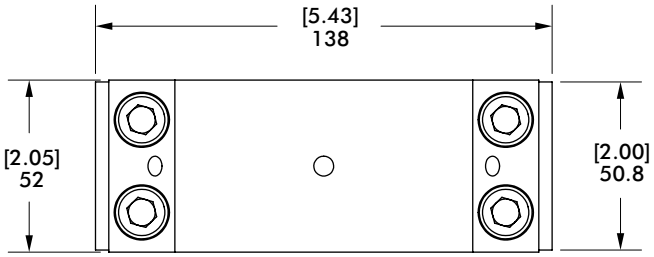

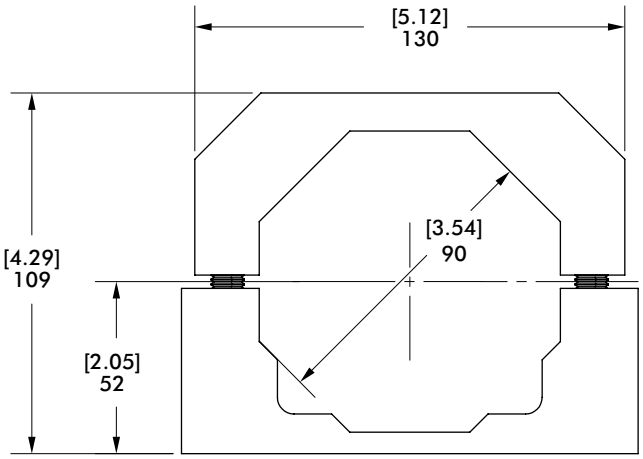

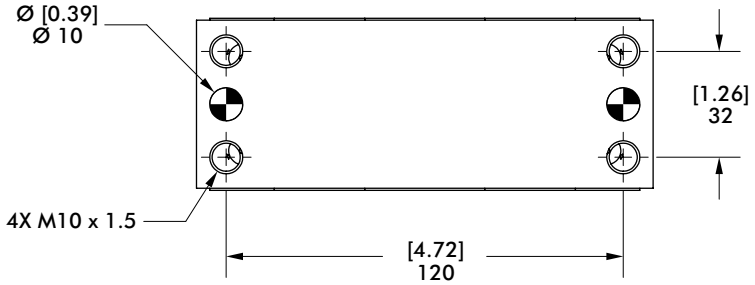

Model Number	Weight
TPMS-90	1.93kg [4.25lb]

Dimensions and technical information are subject to change without notice

BODYBUILDER™ GRIPPER MOUNTS

BodyBuilder™ Octagonal Tooling | Dimensions | Technical Specifications

GPC-150-30BBS 30mm Swivel 150 Series Parallel Gripper Mount

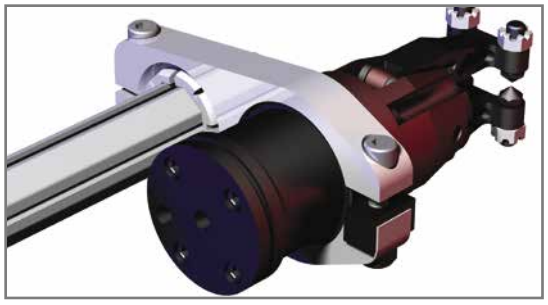

Specifications:

Max. Static Clamp Load:
271 Nm [200 ft-lb]

Material:
Body: Aluminum
Swivel Ball: Steel

Features:

- Removable grip mount lock allows gripper to be adjusted while continuing to holding it in place.
- Swivel ball allows for ±25° adjustment of swivel rotation.

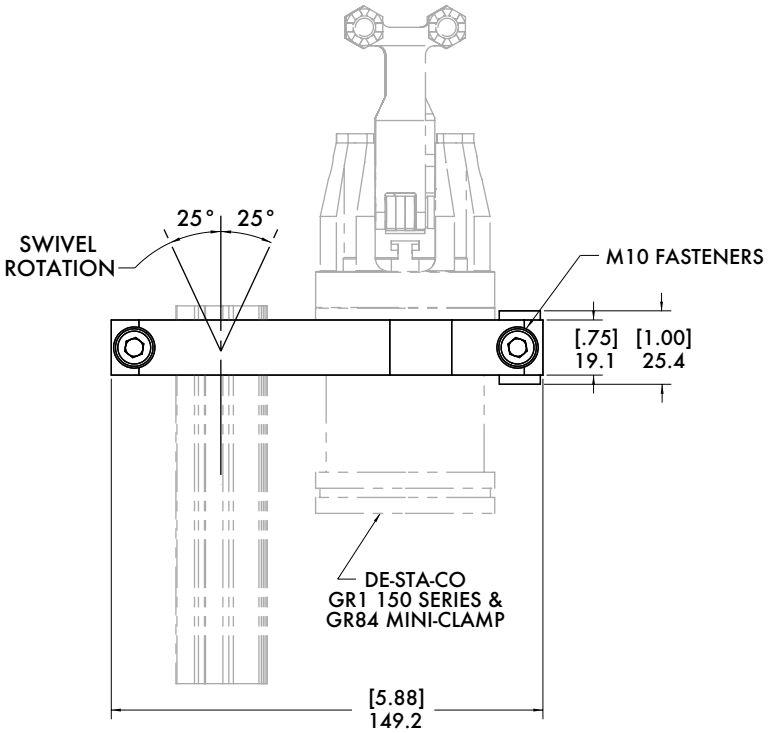

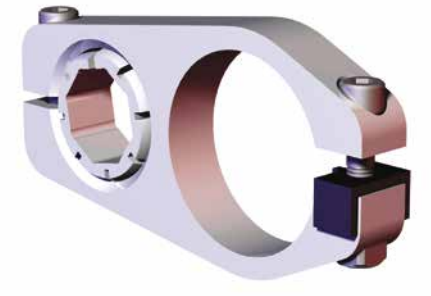

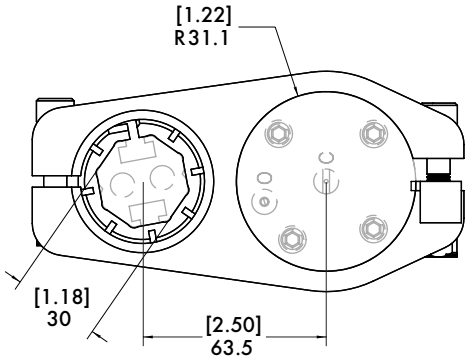

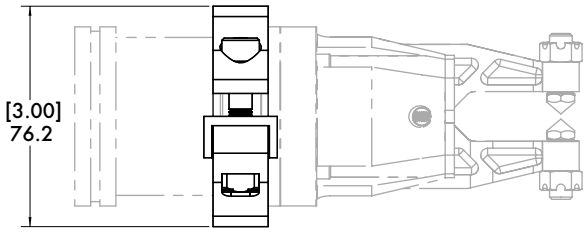

Model Number	Weight
CPI-GPC-150-30BBS-DC	.33 kg [.73 lb]

BODYBUILDER™ GRIPPER MOUNTS

BodyBuilder™ Octagonal Tooling | Dimensions | Technical Specifications

RJM-150-30BBS 30mm End Gripper Mount for 150 Series Gripper

Features:

- Swivel ball allows for ±25° adjustment of swivel rotation.

Specifications:

Max. Static Clamp Load:
271 Nm [200 ft-lb]
Material:
Housing:
Machined Aluminum
Swivel: Steel

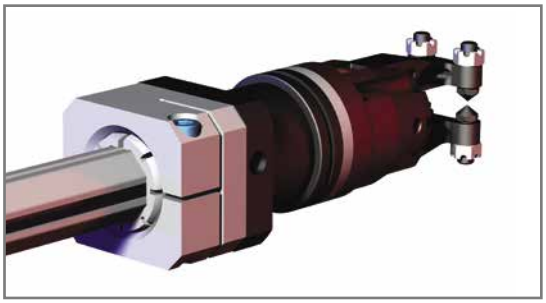

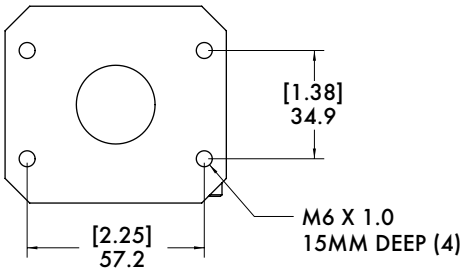

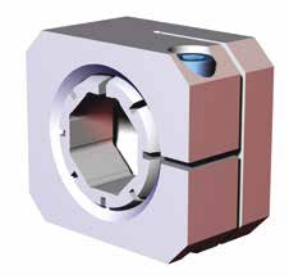

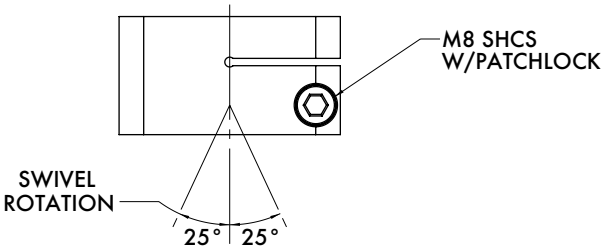

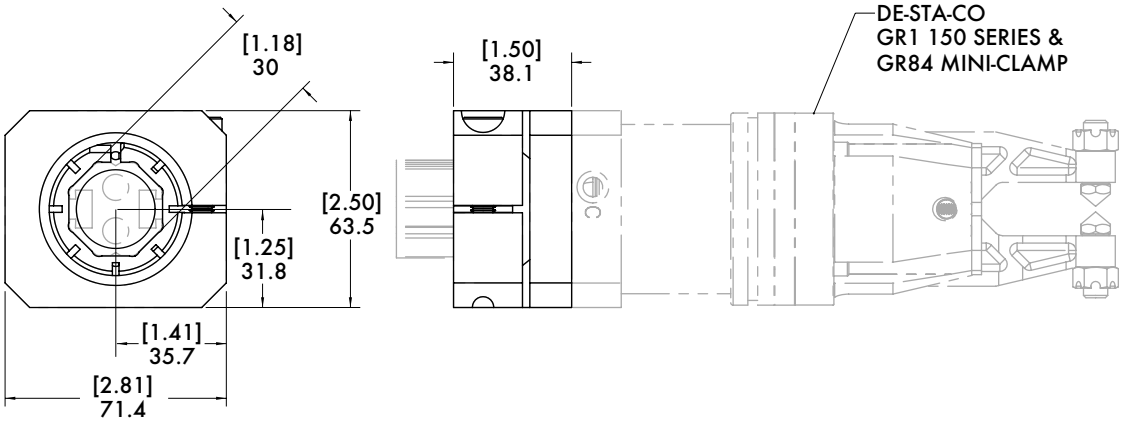

Model Number	Weight
CPI-RJM-150-30BBS	.33 kg [.74 lb]

Dimensions and technical information are subject to change without notice

BODYBUILDER™ GRIPPER MOUNTS

BodyBuilder™ Octagonal Tooling | Dimensions | Technical Specifications

RJM-150-45BBS 45mm End Gripper Mount for 150 Series Gripper

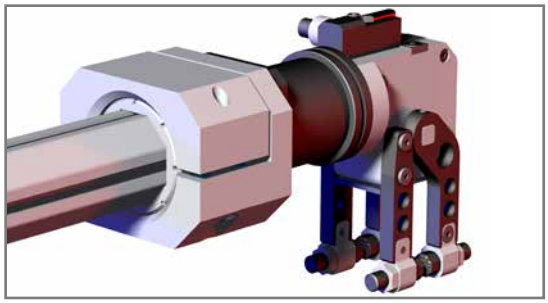

Specifications:
Max. Static Clamp Load:
475 Nm [350 ft-lb]
Material:
Housing:
Machined Aluminum
Swivel: Steel

Features:
- Swivel ball allows for ±22° adjustment of swivel rotation.

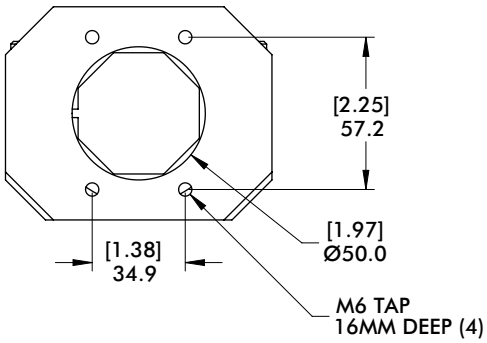

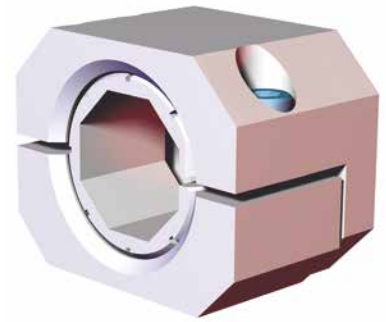

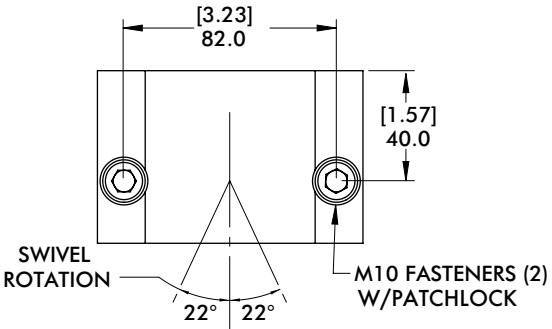

TO USE AS A FIXED MOUNT INSERT BOOM COMPLETELY UNTIL IT COMES INTO CONTACT WITH GRIPPER FOR SWIVEL OPTION INSERT BOOM 40 MM [1.57 IN] OR UNTIL BOOM IS INSERTED ENOUGH TO ALLOW ROTATION WITHOUT OBSTRUCTION

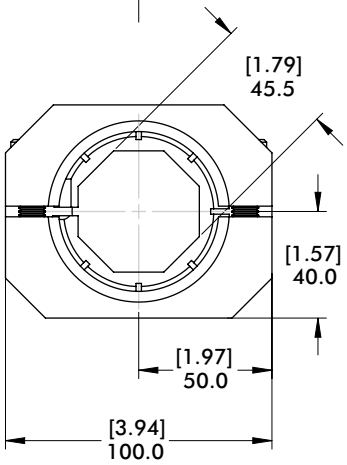

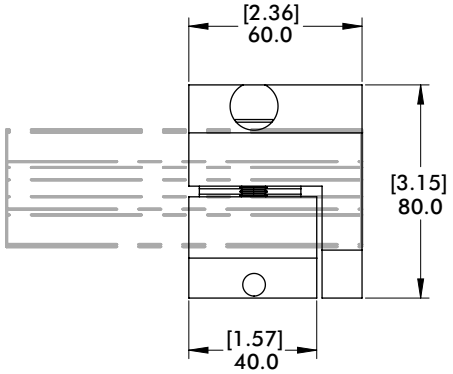

Model Number	Weight
CPI-RJM-150-45BBS	1.23 kg [2.71 lb]

BODYBUILDER™ SWIVEL ARMS

BodyBuilder™ Octagonal Tooling | Dimensions | Technical Specifications

30B50-MSA 30mm Swivel Arms for .50"(in) Apple Core Accessories

Features:

- Mounts to BodyBuilder™ 30mm extrusion boom.
- One bolt design for easy assembly and adjustment, allowing accessories to be repositioned easily.
- Provides 360° of adjustments in (3) axes.
- Used to mount venturi, bumpers, round locators, and proximity switches.

Specifications:

Max. Static Clamp Load:
102 Nm [75 ft-lb]
Material:
Body:
Cast Aluminum
Insert:
Machined Aluminum





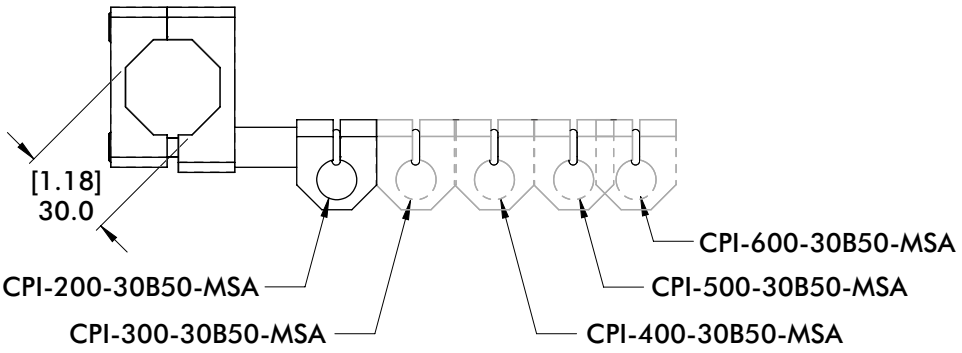

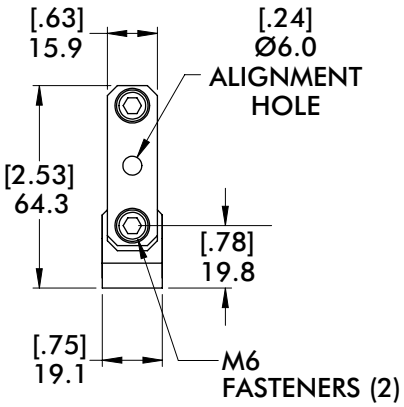

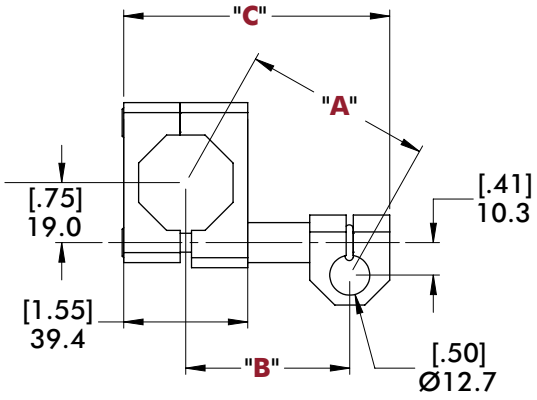

CPI-__L__-30B50-MSA SWIVEL ARM				
"__L__"	"A"	"B"	"C"	Weight
200	59.8 [2.35]	52.1 [2.05]	84.5 [3.33]	.10 kg [.22 lb]
300	82.6 [3.25]	77.2 [3.04]	109.6 [4.32]	.11 kg [.24 lb]
400	106.2 [4.18]	102.1 [4.02]	134.5 [5.30]	.12 kg [.26 lb]
500	130.6 [5.14]	127.3 [5.01]	159.7 [6.29]	.13 kg [.29 lb]
600	150.0 [5.90]	147.1 [5.79]	179.5 [7.07]	.14 kg [1.72 lb]

Dimensions and technical information are subject to change without notice

BODYBUILDER™ SWIVEL ARMS

BodyBuilder™ Octagonal Tooling | Dimensions | Technical Specifications

45B-CSA 45mm Swivel Arms for Ø19mm [.75 in] Apple Core Accessories



Specifications:

Max. Static Clamp Load:
271 Nm [200 ft-lb]
Material:
Body:
Cast Aluminum
Insert:
Machined Aluminum

Features:

- Mounts to BodyBuilder™ 45mm extrusion boom.
- One bolt design for easy assembly and adjustment, allowing accessories to be repositioned easily.
- Provides 360° of adjustments in (3) axes.
- Used to mount venturi, bumpers, round locators, and proximity switches.

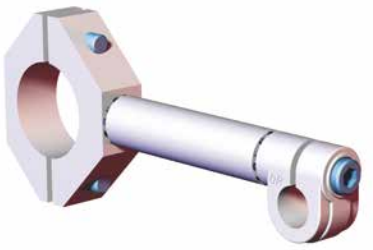

CPI-180-45B-CSA SHOWN

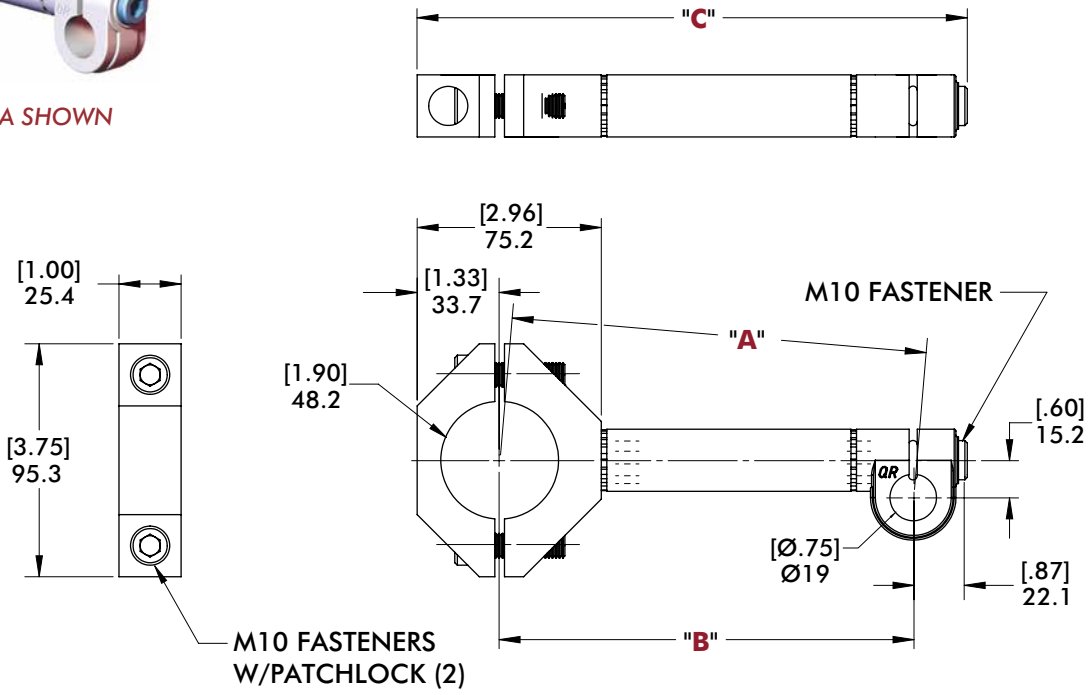

CPI-" L "-45B-CSA SWIVEL ARM				
" L "	"A"	"B"	"C"	Weight
130	119.8 [4.72]	118.8 [4.68]	140.9 [5.56]	.48 kg [1.06 lb]
180	169.8 [6.68]	169.1 [66.6]	224.9 [8.89]	.54 kg [1.20 lb]
230	219.7 [8.65]	219.1 [8.63]	275.0 [10.83]	.61 kg [1.34 lb]
280	269.6 [10.61]	269.2 [10.60]	325.0 [12.80]	.67 kg [1.47 lb]

BODYBUILDER™ SWIVEL ARMS

BodyBuilder™ Octagonal Tooling | Dimensions | Technical Specifications

SA-30 30mm Swivel Arms for Ø19mm [.75 in] Apple Core Accessories

Features:

- Mounts to BodyBuilder™ 30mm extrusion boom.
- One bolt design for easy assembly and adjustment, allowing accessories to be repositioned easily.
- Provides 360° of adjustments in (3) axes.
- Used to mount venturi, bumpers, round locators, and proximity switches.

Specifications:

Max. Static Clamp Load:
271 Nm [200 ft-lb]
Material:
Body:
Cast Aluminum
Insert:
Machined Aluminum





CPI-400-30-SA SHOWN

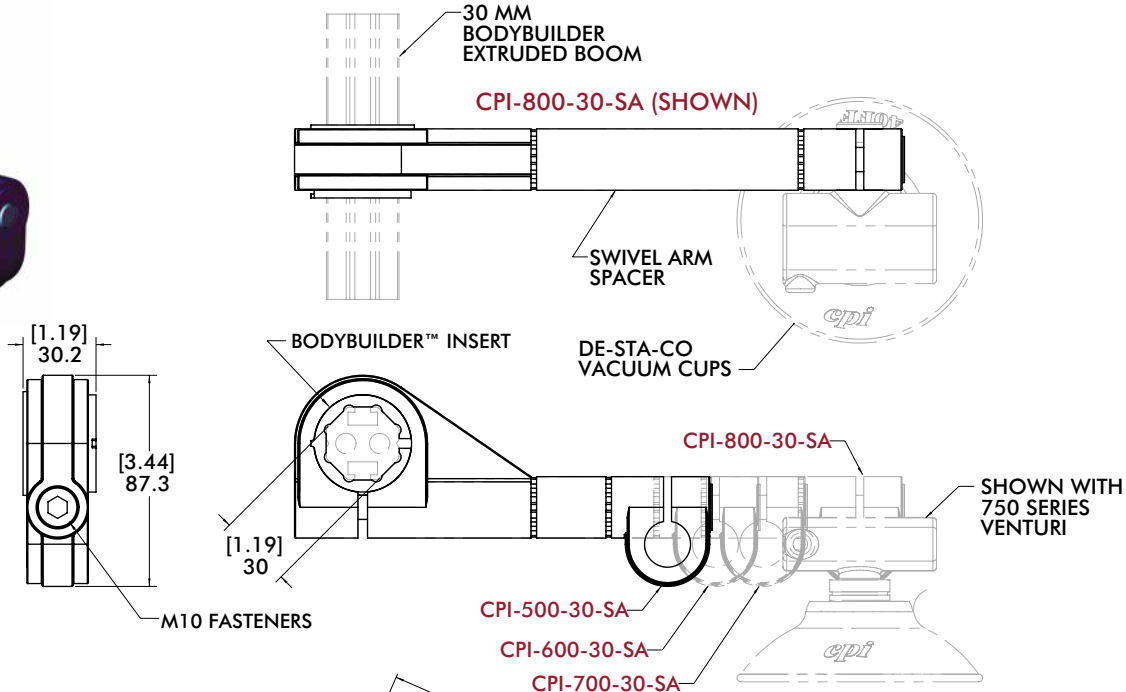

CPI-" L "-30-SA SWIVEL ARM				
" L "	"A"	"B"	"C"	Weight
400	103.8 [4.09]	95.1 [3.74]	142.5 [5.61]	.35 kg [.75 lb]
500	132.8 [5.26]	126.0 [4.96]	172.7 [6.80]	.39 kg [.88 lb]
600	151.7 [5.97]	146.0 [5.75]	192.5 [7.58]	.48 kg [1.06 lb]
700	170.6 [6.72]	165.4 [6.51]	212.1 [8.35]	.51 kg [1.13 lb]
800	209.7 [8.26]	205.5 [8.09]	252.2 [9.93]	.58 kg [1.25 lb]

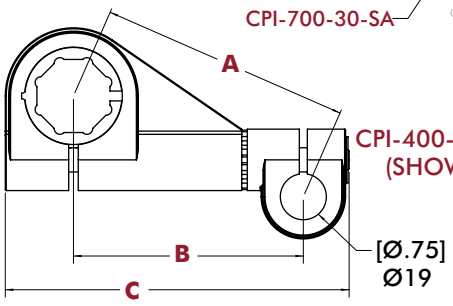

ALSO USED TO MOUNT SAP AND PSM SERIES PROXIMITY MOUNTS.

ROUGH LOCATORS, NEST PAD GUIDES, AND BUMPERS CAN ALSO BE MOUNTED WITH THE USE OF AN APPLE CORE STYLE MOUNT BRACKET SUCH AS THE EST AND AB SERIES NEST PAD BRACKETS

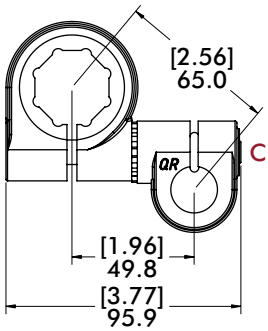

WEIGHT:
258.5 g
[9.1 oz]

BODYBUILDER™ SWIVEL ARMS

BodyBuilder™ Octagonal Tooling | Dimensions | Technical Specifications

30-SA-B112 30mm Swivel Arms for Swivel Ball Mount Accessories



CPI-500-30-SA-B112 (SHOWN)

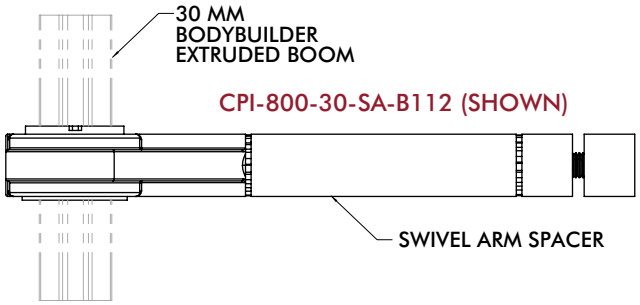

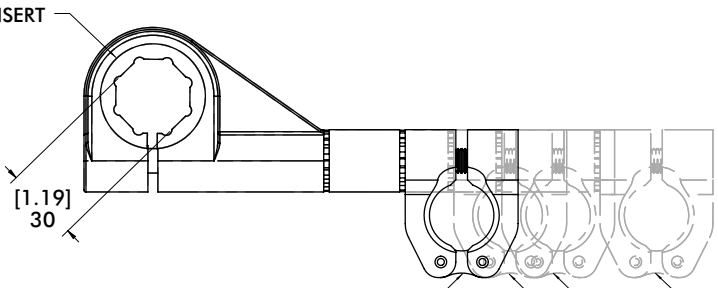

CPI-500-30-SA-B112
CPI-800-30-SA-B112
CPI-700-30-SA-B112
CPI-600-30-SA-B112

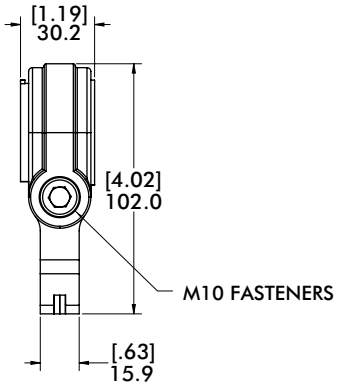

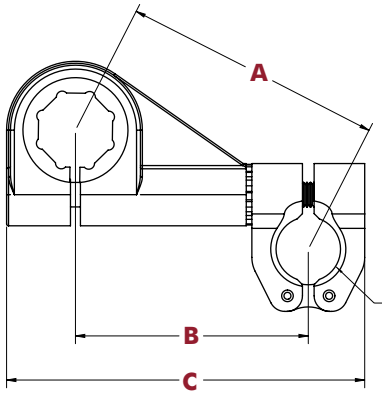

CPI-400-30-SA-B112 (SHOWN)

SWIVEL BALL END
Ø28.58 [Ø1.125]

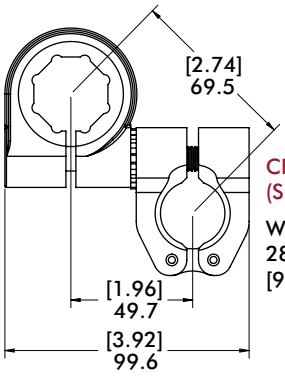

CPI-50-30-SA-B112 (SHOWN)

WEIGHT:
280 g
[9.9 oz]



CPI-" L "-30-SA-B112 SWIVEL ARM				
" L "	"A"	"B"	"C"	Weight
400	106.7 [4.20]	95.0 [3.74]	146.1 [5.75]	.40 kg [.88 lb]
500	135.0 [5.32]	126.0 [4.96]	177.1 [6.97]	.46 kg [1.00 lb]
600	153.7 [6.05]	145.8 [5.74]	196.9 [7.75]	.49 kg [1.06 lb]
700	172.3 [6.78]	165.4 [6.51]	216.5 [8.52]	.53 kg [1.19 lb]
800	211.1 [8.31]	205.5 [8.09]	256.6 [10.10]	.60 kg [1.31 lb]

BODYBUILDER™ SWIVEL ARM ACCESSORIES

BodyBuilder™ Octagonal Tooling | Dimensions | Technical Specifications

BC19 30mm Bodybuilder to Ø19mm [.75 in] Apple Core Swivel End Mount

Features:

- Mounts to BodyBuilder™ 30mm extrusion boom.
- One bolt design for easy assembly and adjustment, allowing accessories to be repositioned easily.
- Provides 360° of adjustment along (2) axis.

Specifications:

Material:
Aluminum



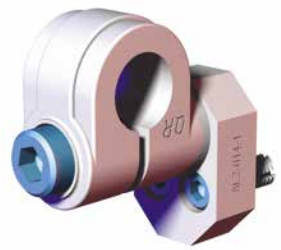

INCLUDES (2) INSERTS TO BE PRESS-FITTED INTO THE END OF 30MM BODYBUILDER™ OCTAGONAL BOOM

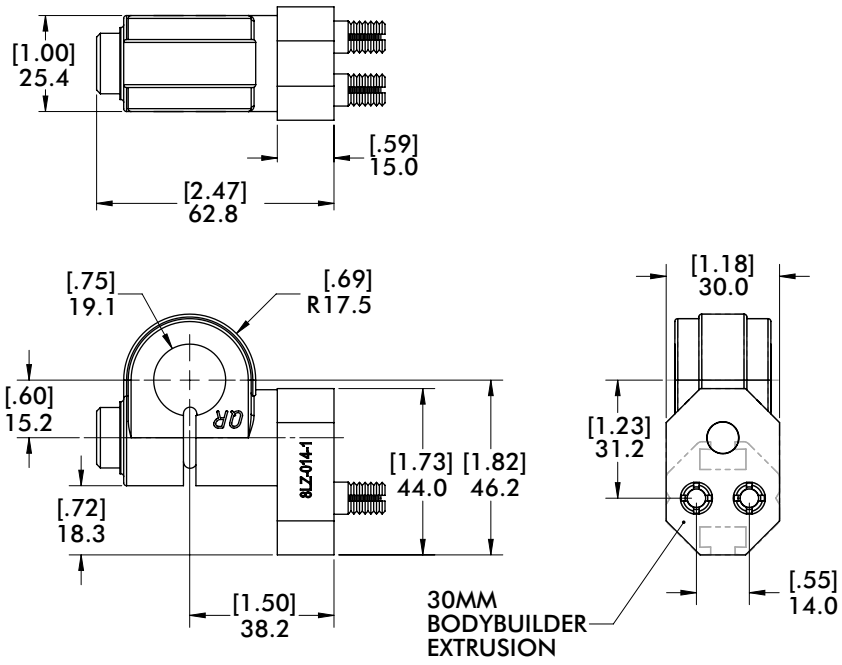

Model Number	Weight
CPI-BC-19	.13 kg [.28 lb]

Dimensions and technical information are subject to change without notice

BODYBUILDER™ SWIVEL ARM ACCESSORIES

BodyBuilder™ Octagonal Tooling | Dimensions | Technical Specifications

AB-750-SL Part Present Proximity Switch Mount

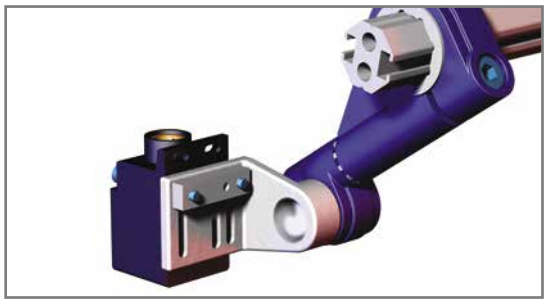

Specifications:

Max. Static Clamp Load:
271 Nm [200 ft-lb]

Material:
Aluminum

Features:

- Mounts a 40mm square proximity sensor to the BodyBuilder™ 30mm Swivel Arm (CPI-"L"-30-SA).
- Mount allows for 360 degrees of radial adjustment along one axis.
- Slots allows 28.6mm [1.13 in] of linear adjustment for fine tuning during final setup.



FASTENERS AND NUT INCLUDED

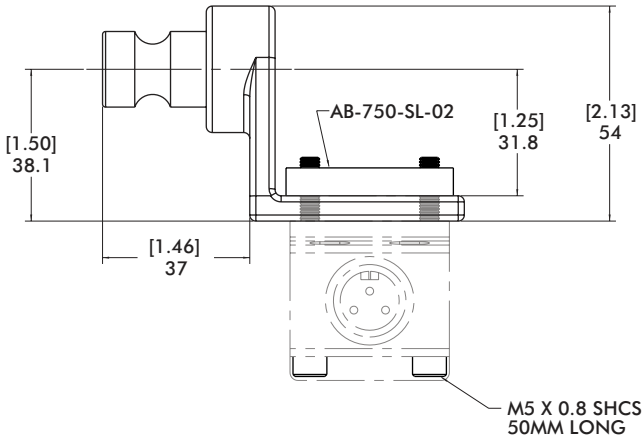

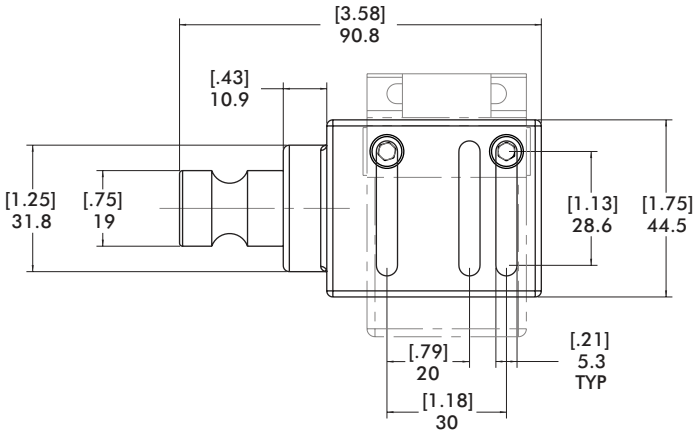

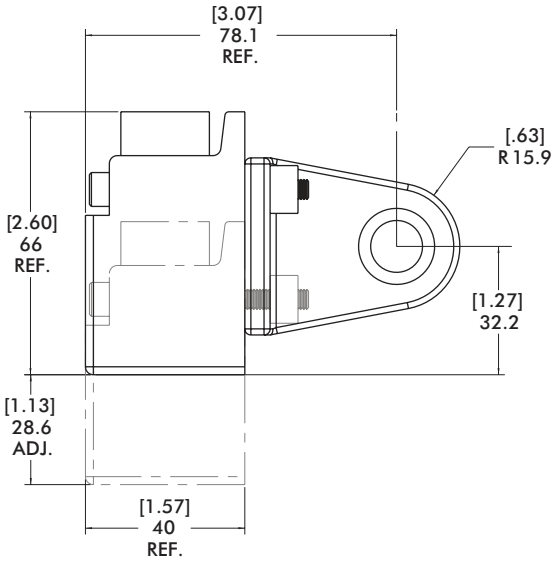

Model Number	Weight
CPI-AB-750-SL	.10 KG [.22 lb]

BODYBUILDER™ SWIVEL ARM ACCESSORIES

BodyBuilder™ Octagonal Tooling | Dimensions | Technical Specifications

NPG-15RL-400 Rough Locator

Features:

- Mounts to Nest Pad Brackets and indirectly to BodyBuilder™ 30mm Swivel Arm Mount.

Specifications:

Max. Static Clamp Load:
271 Nm [200 ft-lb]
Material:
Bracket: Steel
Wear Surface: UHMW

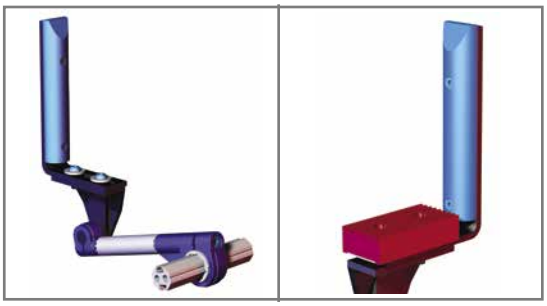

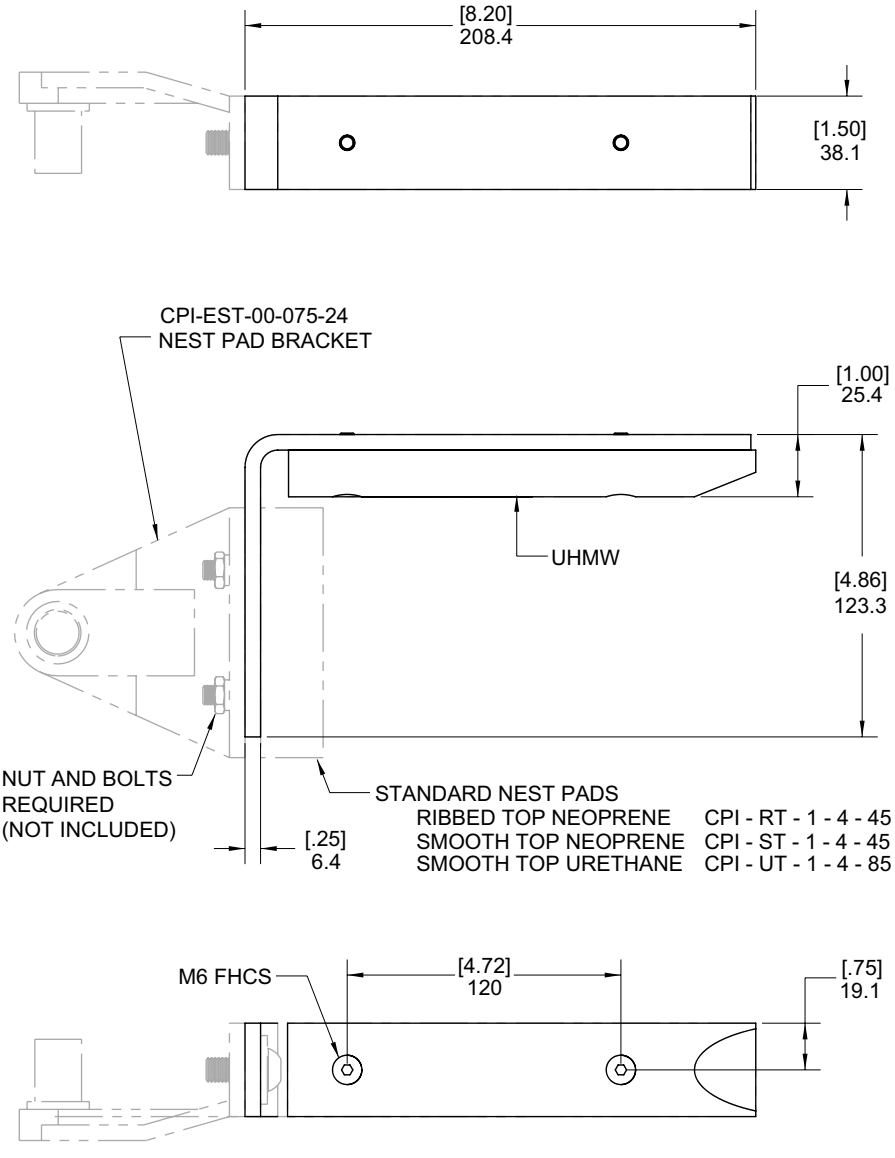



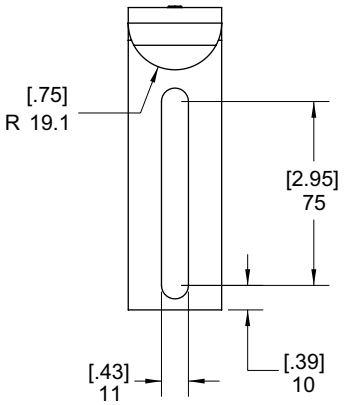

Model Number	Weight
CPI-NPG-15RL-400	0.86 kg [1.90 lb]

Dimensions and technical information are subject to change without notice

SAP-BM10 Ø19mm [.75 in] Apple Core Nest Bumper Mount

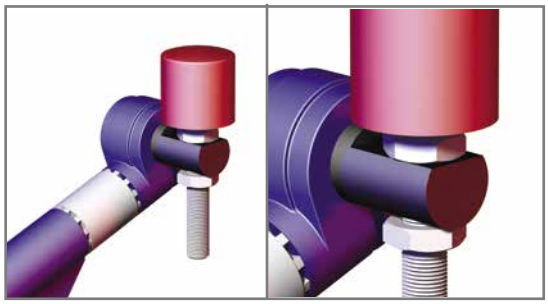

Specifications:

Max. Static Clamp Load:
271 Nm [200 ft-lb]

Material:
Steel

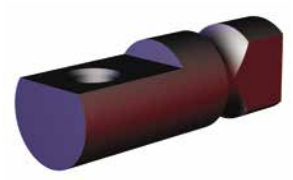

Model Number	Weight
CPI-SAP-BM10	.10 kg [.21 lb]

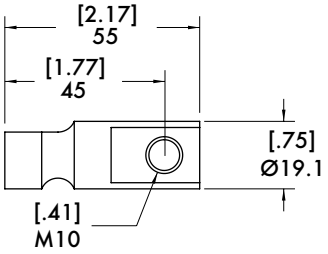

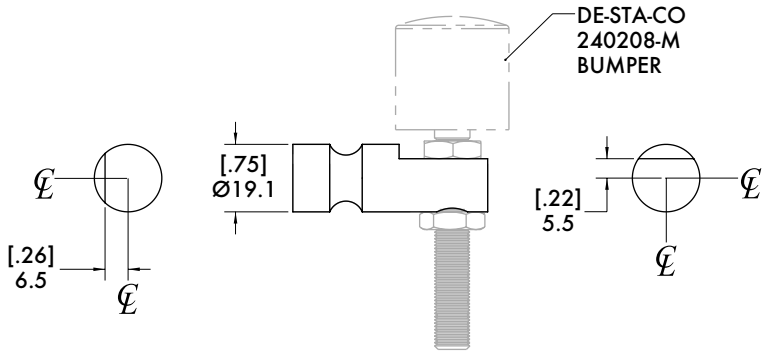

84N1 SERIES

Accelerate® Press Shop Sheet Metal Grippers | Ordering Information

84N1 - N - 030 - FC 01 - 1 - 0 - 0 - 3

Ports	Description
N	1/8 NPT
G	1/8 BSPP

Opening Angle	Description
030	30° Opening Angle
045	45° Opening Angle
060	60° Opening Angle
075	75° Opening Angle

Jaw Style/ Tip Mount	Description
FA	Fixed Lower 0° Jaw, Single Tip Mount
FC	Fixed Lower 0° Jaw, Double Tip Mount
CA	Fixed Lower Chisel Jaw, Single Tip Mount
CC	Fixed Lower Chisel Jaw, Double Tip Mount
CS	Fixed Lower Chisel Jaw, Double Tip w/Sensor Mount
PC	Fixed Lower 90° Jaw, Double Tip Mount

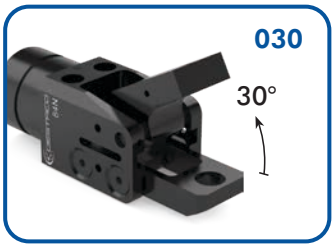

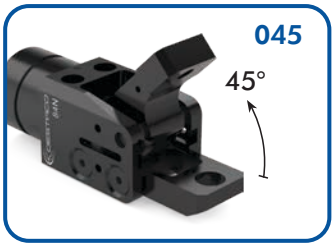

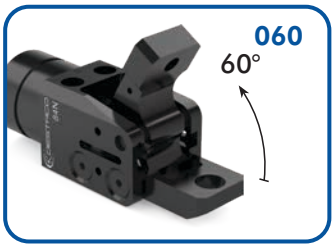

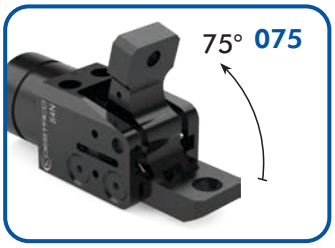

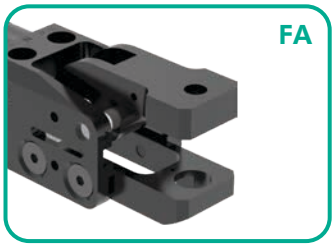

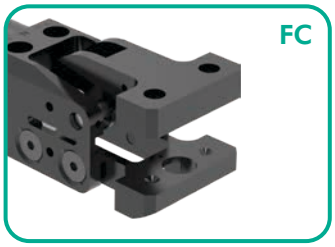

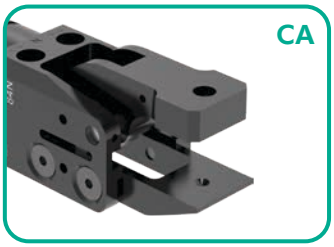

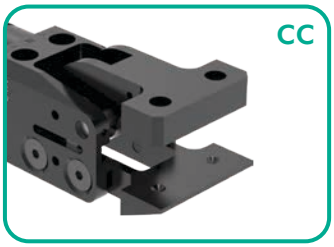

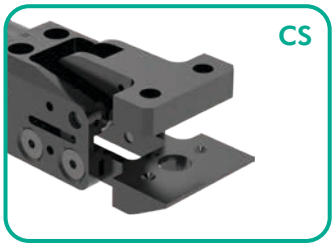

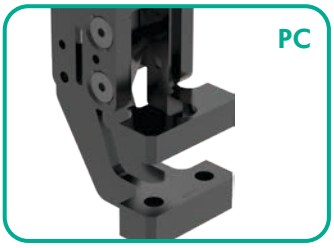



Specifications: SG-PRG-4

Mounts (sold separately): SG-PRG-19 thru 20

Accessories: SG-PRG-23 thru 28.

Dimensions and technical information are subject to change without notice

84N1 SERIES

Accelerate® Press Shop Sheet Metal Grippers | Ordering Information

Part Presence Detection	Description
0	None
P	PNP
N	NPN

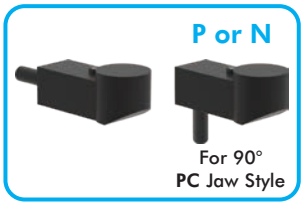

4mm Material Sensing Range

Left Sensor Side Mount	Description
0	None
1	Dual Magnetoresistive PNP Sensors Left Side
2	Dual Magnetoresistive NPN Sensors Left Side
3	Infrared PNP Sensing (not available for **PC** jaw style)

Right Sensor Side Mount	Description
0	None
1	Dual Magnetoresistive PNP Sensors Right Side
2	Dual Magnetoresistive NPN Sensors Right Side
3	Infrared PNP Sensing (not available for **PC** jaw style)

*Use of a Sheet Stop is highly recommended when using 2-Point Sensing.

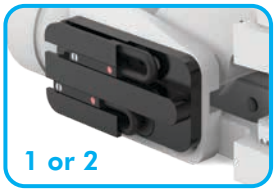

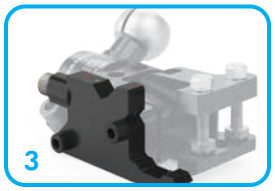

0.5 mm blank minimum sheet thickness. Side mount option 1 & 2 sensing detects gripper jaw position can be adjusted to sense blank, double, full open, and full closed based on jaw position.

Sheet Stop	Description
0	None (for **PC** option only)
1	Required (all jaw options except **PC**)



Adjustable Jaw Tip Options

Upper Jaw Only

00	None
01	Serrated Tip
02*	Serrated Notch Tip
03	Point Tip
04	Peen Tip
05	Polyurethane Tip (Durometer 70A)

*02 serrated notch tip (for use with part presence sensing FA jaw style only).

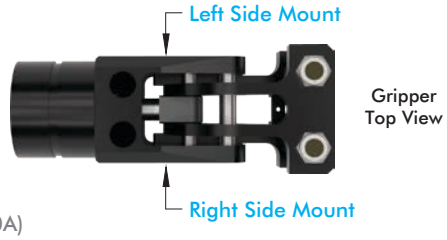

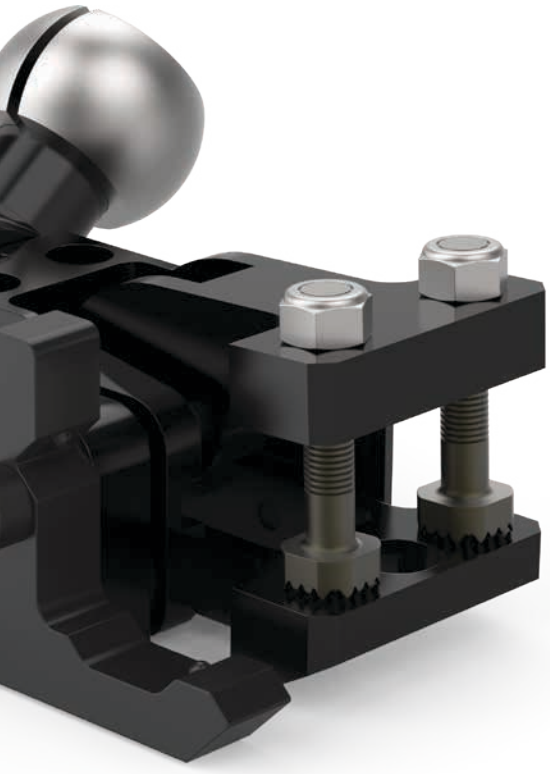











Description	Part #	Single Tip Jaw	Double Tip Jaw
Polyurethane Tip	8JD-1005-1	Yes*	Yes
Point Tip	8JD-1001-1	Yes*	Yes
Serrated Tip	8JD-1002-1	Yes*	Yes
Peen Tip	8JD-1003-1	Yes*	Yes
Serrated Notched Tip (for Jaw Style **FA** only)	8JD-1004-1	Yes	No

*These tips work with the FA jaw type but will cause a false positive signal if the part present sensor is installed.

Customer is responsible for final adjustments and tightening of all accessory mounting screws.

84N1 SERIES

Accelerate® Press Shop Sheet Metal Grippers | Dimensions

FA/FC Options: Standard Jaws

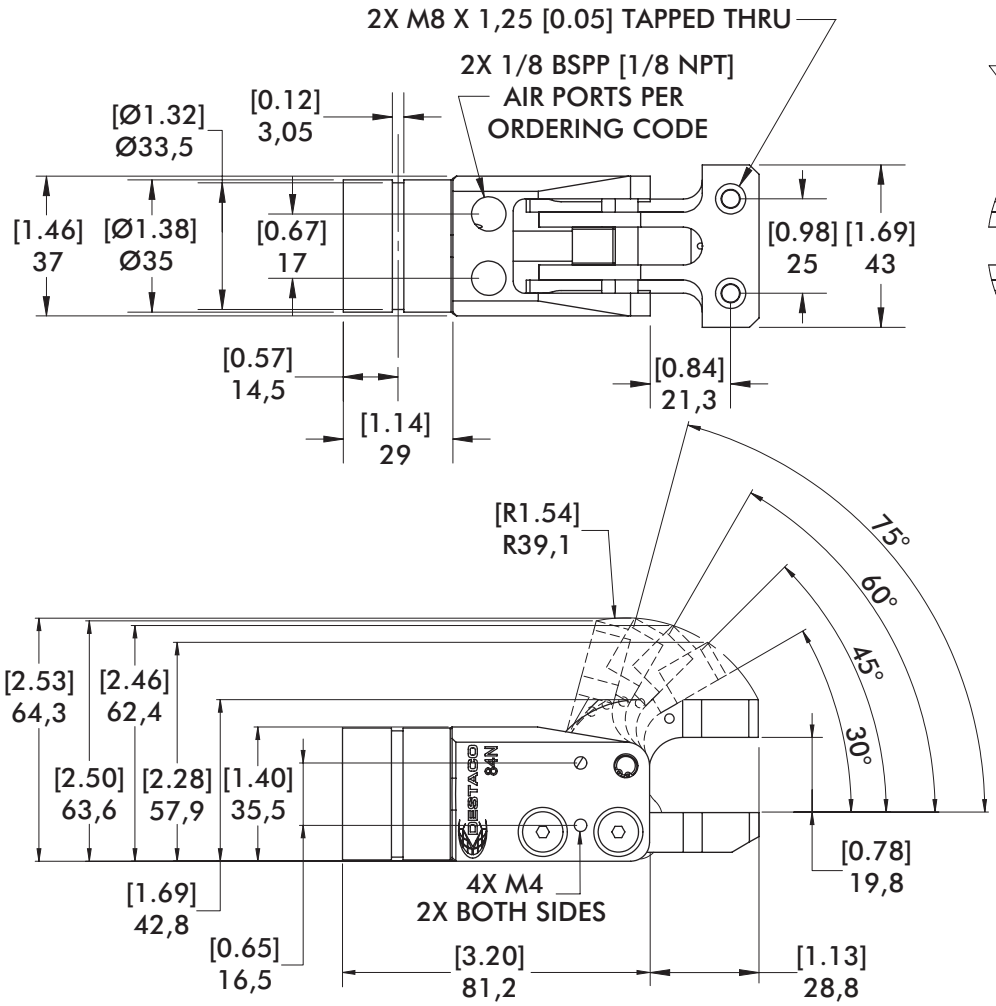

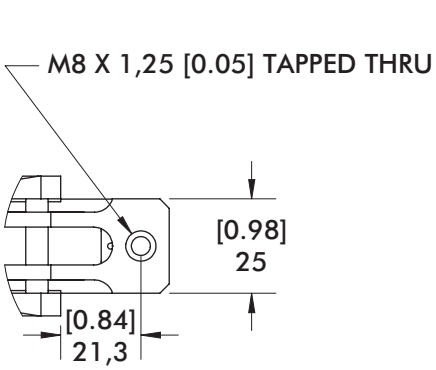

SINGLE TIP VERSION



FA Single Tip



FC Double Tip

CA/CC/CS Options: Chisel Jaws



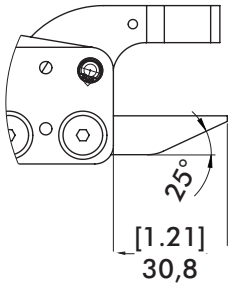

CA
Single Tip Version



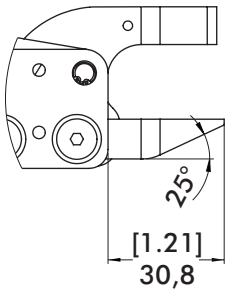

CC
Double Tip Version



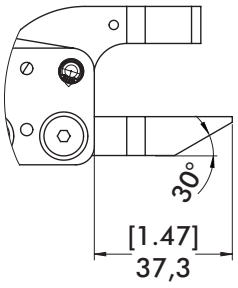

CS
Double Tip Version
Part Presence Sensor Ready

Dimensions and technical information are subject to change without notice

84N1 SERIES

Accelerate® Press Shop Sheet Metal Grippers | Dimensions and Ordering Information

PC Option: 90° Jaws

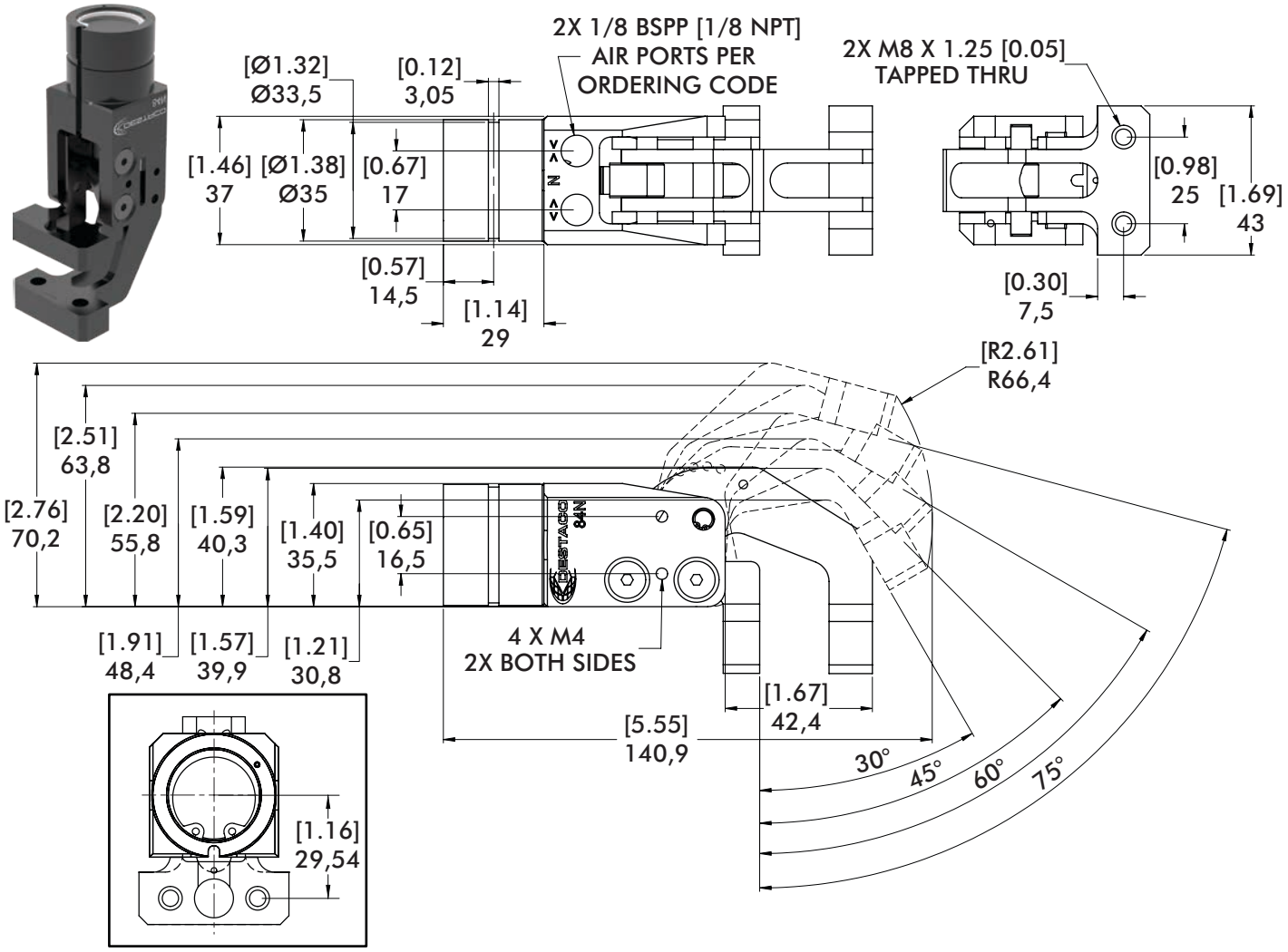

Specifications

Specification	Unit	84N1
Grip Force at 5 bar	N [lbf]	Up to 1000 [225]
Weight (**FA** jaws - no tips)	Kg [lb]	0.27 [0.6]
Size L x W x H (open)	mm [in]	110 x 43 x 64 [4.33] x [1.69] x [2.52]
Actuation Time	ms	33
Minimum Operating Pressure	bar [psi]	4 [58]
Opening Angles:		
Upper Jaws		30°, 45°, 60°, 75°
Lower Jaws		Fixed
Piston Ø	mm [in]	25 [0.98]
Air Consumption/Cycle	L [in³]	0,015 [0.92]
Temperature Range	C° [F°]	-35° to 80° [-31° to 176°]

84N2 SERIES

Accelerate® Press Shop Sheet Metal Grippers | Ordering Information

84N2 - **N** - **030** - **FA** - **2CS3** - **1** - **0** - **1** - **0**

Ports	Description
N	1/8 NPT
G	1/8 BSPP

Opening Angle	Description
030	30° Opening Angle
045	45° Opening Angle
060	60° Opening Angle
075	75° Opening Angle



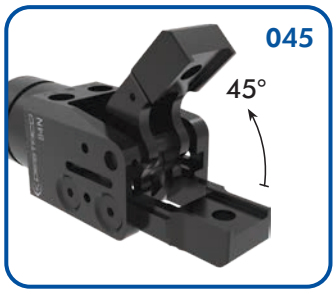

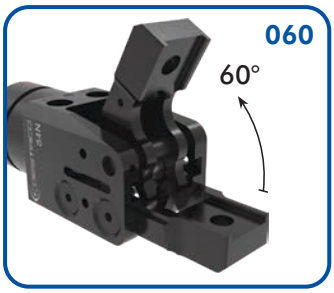

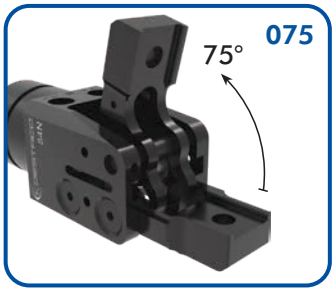

Jaw Type and Style	Description
FA	Straight Fixed Lower Jaw
PA	90° Jaw Configuration

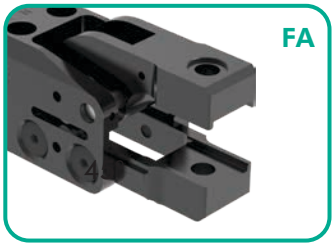

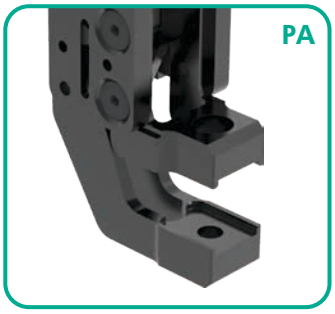



Specifications: SG-PRG-8

Mounts (sold separately): SG-PRG-19 thru 20

Accessories: SG-PRG-24 thru 28.

Dimensions and technical information are subject to change without notice

In-Jaw Blank Sensing*	Description
0	None
P	PNP
N	NPN

*In-jaw blank sensing not available with Single Cone Style Tip.



Sheet Stop	Description
0	None (for **PC** option only)
1	Required (for **FA** option only)



Left Sensor Side Mount*	Description
0	None
1	Dual Magnetoresistive PNP Sensors Left Side
2	Dual Magnetoresistive NPN Sensors Left Side
3	Infrared PNP Sensing (not available for **PA** jaw style)

Right Sensor Side Mount*	Description
0	None
1	Dual Magnetoresistive PNP Sensors Right Side
2	Dual Magnetoresistive NPN Sensors Right Side
3	Infrared PNP Sensing (not available for **PA** jaw style)

*Use of a Sheet Stop is highly recommended when using 2-Point Sensing.



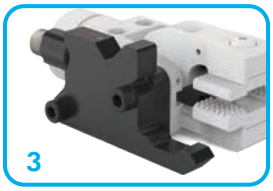

0.5 mm blank minimum sheet thickness. Side mount option **1** & **2** sensing detects gripper jaw position can be adjusted to sense blank, double, full open, and full closed based on jaw position.

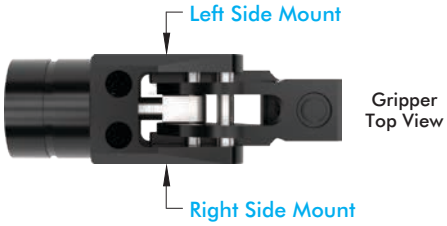

Non-Adjustable Jaw Tip Insert Options

0000 None

- or -

Step 1 - Tip Type

Choose One

2 C S 3

1 Single Tip
2 Double Tip*

*Double polyurethane tip style not available.





Step 2 - Upper Jaw Tip Insert

Choose One (see images below)

2 **C** S 3

C	Cone Style Tip*
S	Serrated Style Tip
F	Flat Style Tip
P	Polyurethane

*Single Cone [1Cxx] not compatible with In-Jaw Sensor.

Step 3 - Lower Jaw Tip Insert

Choose One (see images below)

2 C **S** 3

S	Serrated Style Tip Flat Style Tip
S	Serrated Style Tip Flat Style Tip
F	Serrated Style Tip Flat Style Tip Polyurethane Style Tip (Single Only)
P	Flat Style Tip Polyurethane Style Tip (Single Only)

Step 4 - Part Thickness Range *Choose One*

2 C S **4**

1	0.5 to 1.1 mm	Black – Black
2	1.1 to 1.7 mm	Silver – Black
3	1.7 to 2.3 mm	Silver – Silver
4	2.3 to 2.9 mm	Gold – Silver
5	2.9 to 3.5 mm	Gold – Gold

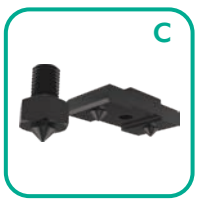

Single or Double Cone Tips (not available for lower jaw)



Single or Double Serrated Tips

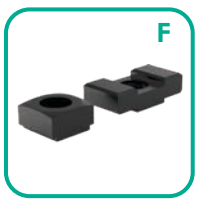

Single or Double Flat Tips

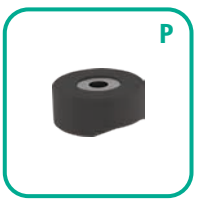

Single Polyurethane Tip

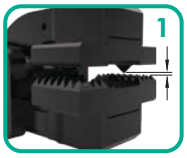

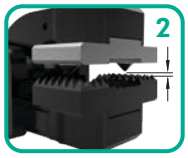

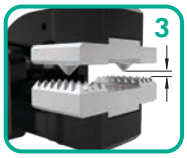

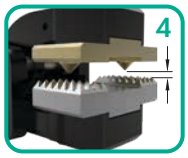

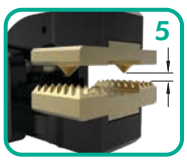

Customer is responsible for final adjustments and tightening of all accessory mounting screws.

84N2 SERIES

Accelerate® Press Shop Sheet Metal Grippers | Dimensions

FA Option: Standard Jaws



PA Option: 90° Jaws



Dimensions and technical information are subject to change without notice

Specification	Unit	84N2
Grip Force at 5 bar	N [lbf]	Up to 1000 [225]
Weight (**FA** jaws - no tips)	Kg [lb]	0.27 [0.6]
Size L x W x H (open)	mm [in]	110 x 43 x 64 [4.33] x [1.69] x [2.52]
Actuation Time	ms	33
Minimum Operating Pressure	bar [psi]	4 [58]
Opening Angles:		
Upper Jaws		30°, 45°, 60°, 75°
Lower Jaws		Fixed
Piston ∅	mm [in]	25 [0.98]
Air Consumption/Cycle	L [in^3]	0,015 [0.92]
Temperature Range	C° [F°]	-35° to 80° [-31° to 176°]

84N5 SERIES (FIXED LOWER JAW)

Accelerate® Press Shop Sheet Metal Grippers | Ordering Information

84N5 - **G** - **400** - **FA** - **1PF4** - **1** - **P** - **0** - **1**

Ports	Description
N	1/8 NPT
G	1/8 BSPP

Opening Angle	Description
300	30° Opening Angle (**FA** option only)
400	45° Opening Angle (**FA** option only)
075	75° Opening Angle
ADJ	15° to 75° Adjustable Opening Angle

Jaw Type and Style	Description
FA	Straight Fixed Lower Jaw
PA	90° Straight Fixed Lower Jaw

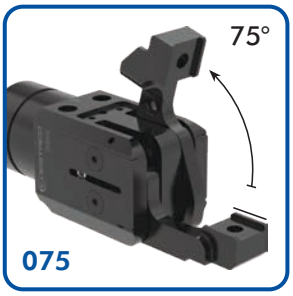





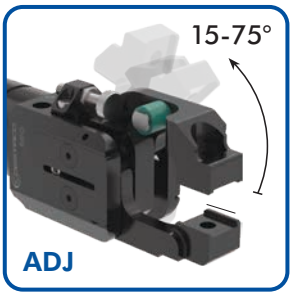

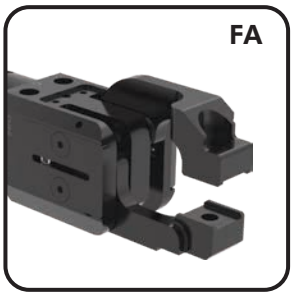

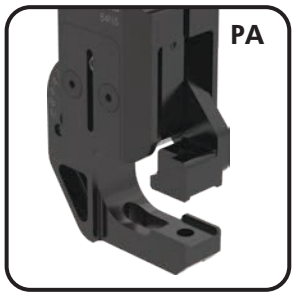

Specifications: SG-PRG-16

Mounts (sold separately): SG-PRG-21 thru 22

Accessories: SG-PRG-24 thru 28.



84N5-G-400-FA-1PF4-1-P-01
shown with **GT-84N1-32B-A** mount.

US Patent #10549431

84N5 SERIES (FIXED LOWER JAW)

Accelerate® Press Shop Sheet Metal Grippers | Ordering Information

In-Jaw Blank Sensing*	Description
0	None
P	PNP
N	NPN

*In-jaw blank sensing not available with Single Cone Style Tip.

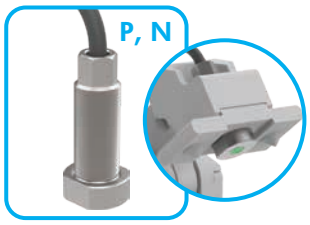

Left Side 2-Point Sensing	Description	Right Side 2-Point Sensing	Description
0	None	0	None
1	Dual Magneto-Resistive PNP Sensors Left Side	1	Dual Magneto-Resistive PNP Sensors Right Side
2	Dual Magneto-Resistive NPN Sensors Left Side	2	Dual Magneto-Resistive NPN Sensors Right Side



0.5 mm blank minimum sheet thickness. Side mount option **1** & **2** sensing detects gripper jaw position can be adjusted to sense blank, double, full open, and full closed based on jaw position.

Sheet Stop	Description
0	None (**PA** option only)
1	Required (**FA** option only)



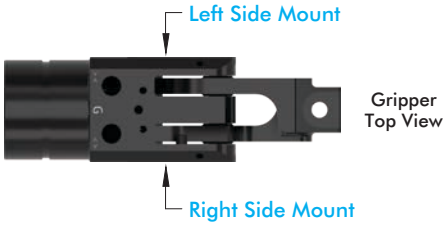

Non-Adjustable Jaw Tip Insert Options

0000 None

- or -

Step 1 - Tip Type

Choose One

2 C S 3

1 Single Tip
2 Double Tip*

*Double polyurethane tip style not available.





Step 2 - Upper Jaw Tip Insert

Choose One (see images below)

2 **C** S 3

C	Cone Style Tip*
S	Serrated Style Tip
F	Flat Style Tip
P	Polyurethane

*Single Cone [**1Cxx**] not compatible with In-Jaw Sensor.

Step 3 - Lower Jaw Tip Insert†

Choose One (see images below)

2 C **S** 3

S	Serrated Style Tip Flat Style Tip
S	Serrated Style Tip Flat Style Tip
F	Serrated Style Tip Flat Style Tip Polyurethane Style Tip (Single Only)
P	Flat Style Tip Polyurethane Style Tip (Single Only)

†For Chisel Jaw types **SC** and **DC** enter **0** for Lower Jaw Tip Insert.

Step 4 - Part Thickness Range *Choose One*

2 C S **4**

1	0.5 to 1.1 mm	Black – Black
2	1.1 to 1.7 mm	Silver – Black
3	1.7 to 2.3 mm	Silver – Silver
4	2.3 to 2.9 mm	Gold – Silver
5	2.9 to 3.5 mm	Gold – Gold

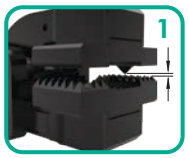

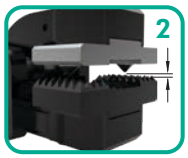

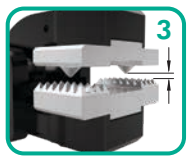

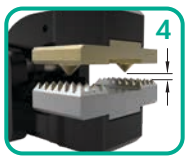

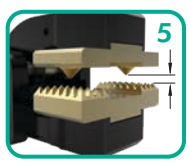

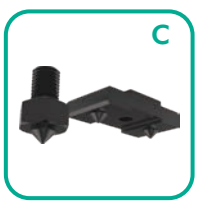

Single or Double Cone Tips (not available for lower jaw)



Single or Double Serrated Tips

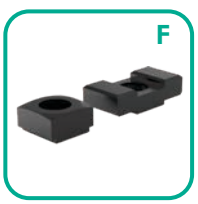

Single or Double Flat Tips

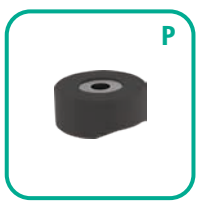

Single Polyurethane Tip

Customer is responsible for final adjustments and tightening of all accessory mounting screws.

84N5 SERIES (MOVEABLE LOWER JAWS)

Accelerate® Press Shop Sheet Metal Grippers | Ordering Information

84N5 - G - ADJ - DA - 2CS4 - 1 - P - 0 - 1

Ports	Description
N	1/8 NPT
G	1/8 BSPP







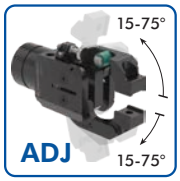

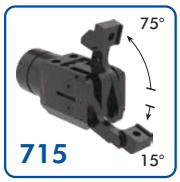

















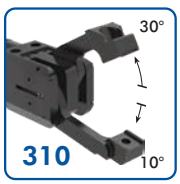

Opening Angle	Upper Jaw	Lower Jaw	For Jaw Type
375	30°	75°	DA
475	45°	75°	DA
075	75°	75°	DA
ADJ	15-75°	15-75°	DA
315	30°	15°	DR, SC, DC
415	45°	15°	DR, SC, DC
715	75°	15°	DR, SC, DC
322	30°	22°	DR, SC, DC
422	45°	22°	DR, SC, DC
722	75°	22°	DR, SC, DC
330	30°	30°	DR, SC, DC
430	45°	30°	DR, SC, DC
730	75°	30°	DR, SC, DC
310	30°	10°	EJ

Specifications: SG-PRG-16

Mounts (sold separately):
SG-PRG-21 thru 22

Accessories: SG-PRG-24 thru 28.

Jaw Type and Style	Description
DA	Double Open Jaws
DR	Drop Jaw
SC	Single Chisel Jaw
DC	Double Chisel Jaw
EJ	Extended Jaw





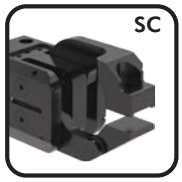

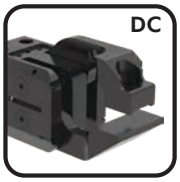



84N5-G-ADJ-DA-2CS4-1-P-01
shown with **GT-84N-GPC-25MS-A** mount.

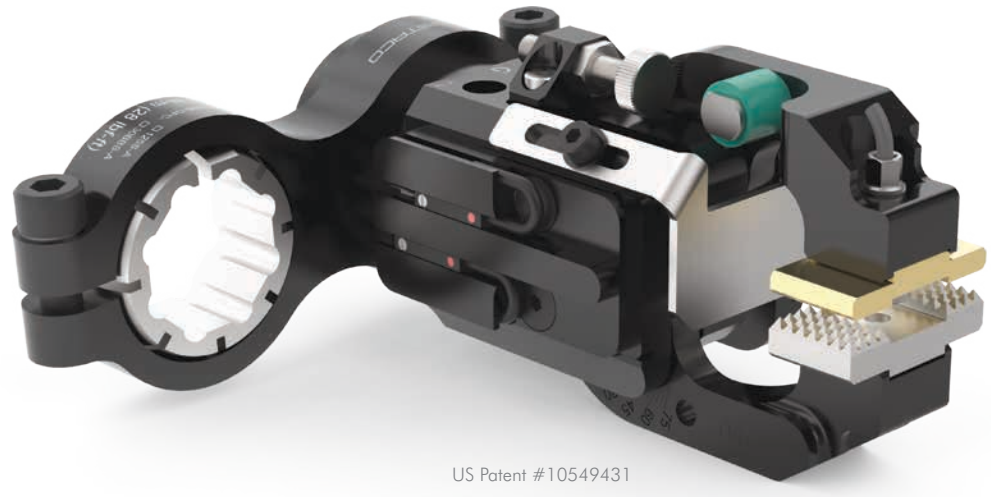

US Patent #10549431

Dimensions and technical information are subject to change without notice

84N5 SERIES (MOVEABLE LOWER JAWS)

Accelerate® Press Shop Sheet Metal Grippers | Ordering Information

In-Jaw Blank Sensing*	Description
0	None
P	PNP
N	NPN

*In-jaw blank sensing not available with Single Cone Style Tip.

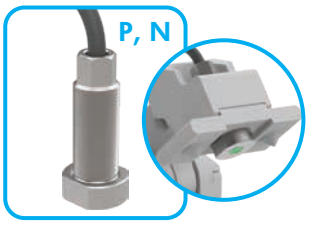

Left Side 2-Point Sensing	Description
0	None
1	Dual Magneto-Resistive PNP Sensors Left Side
2	Dual Magneto-Resistive NPN Sensors Left Side

Right Side 2-Point Sensing	Description
0	None
1	Dual Magneto-Resistive PNP Sensors Right Side
2	Dual Magneto-Resistive NPN Sensors Right Side



0.5 mm blank minimum sheet thickness. Side mount option **1** & **2** sensing detects gripper jaw position can be adjusted to sense blank, double, full open, and full closed based on jaw position.

Sheet Stop	Description
1	Required



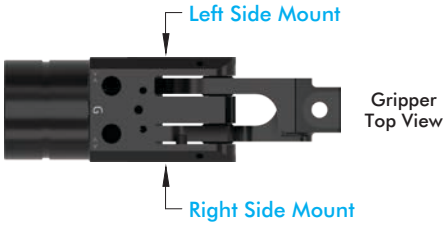

Non-Adjustable Jaw Tip Insert Options

0000 None

- or -

Step 1 - Tip Type*

Choose One

2 C S 3

1 Single Tip
2 Double Tip





*Single Tip not compatible with Double Chisel Jaw type option **DC**. Double polyurethane tip style not available.

Step 2 - Upper Jaw Tip Insert

Choose One (see images below)

2 **C** S 3

C	Cone Style Tip*
S	Serrated Style Tip
F	Flat Style Tip
P	Polyurethane

*Single Cone [**1Cxx**] not compatible with In-Jaw Sensor.

Step 3 - Lower Jaw Tip Insert†

Choose One (see images below)

2 C **S** 3

S	Serrated Style Tip
	F Flat Style Tip
S	Serrated Style Tip
	F Flat Style Tip
F	Flat Style Tip
	P Polyurethane Style Tip (Single Only)
P	Polyurethane
	F Flat Style Tip
	P Polyurethane Style Tip (Single Only)

†For Chisel Jaw types **SC** and **DC** enter **0** for Lower Jaw Tip Insert.

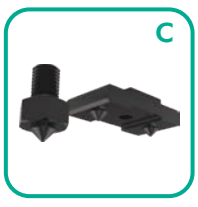

Single or Double Cone Tips (not available for lower jaw)



Single or Double Serrated Tips

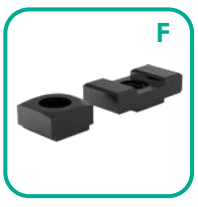

Single or Double Flat Tips

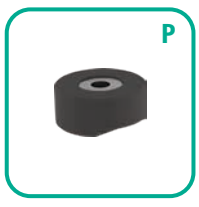

Single Polyurethane Tip

Step 4 - Part Thickness Range *Choose One*

2 C S **4**

1	0.5 to 1.1 mm	Black – Black
2	1.1 to 1.7 mm	Silver – Black
3	1.7 to 2.3 mm	Silver – Silver
4	2.3 to 2.9 mm	Gold – Silver
5	2.9 to 3.5 mm	Gold – Gold

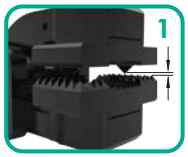

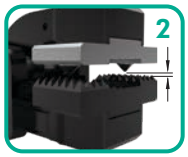

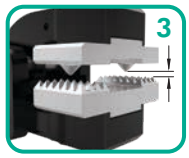

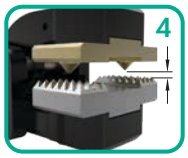

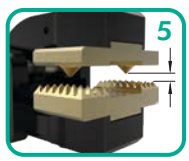

Customer is responsible for final adjustments and tightening of all accessory mounting screws.

84N5 SERIES (FIXED LOWER JAW)

Accelerate® Press Shop Sheet Metal Grippers | Dimensions

FA Option: Standard Jaws



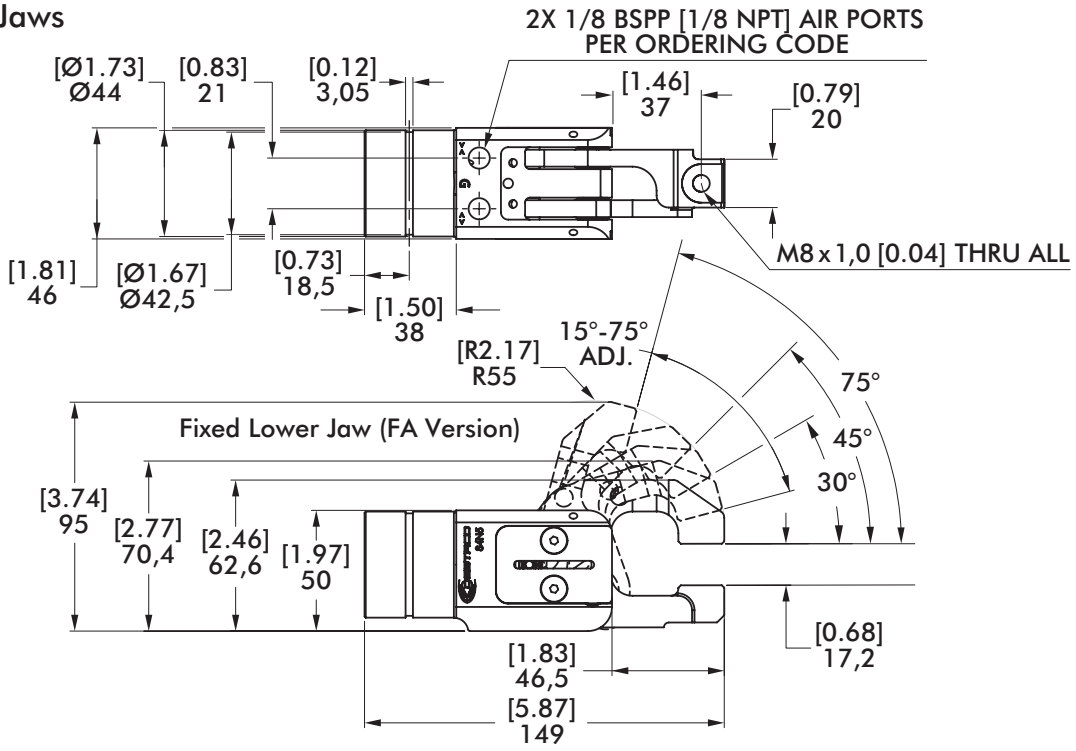

PA Option: 90° Straight Fixed Lower Jaw



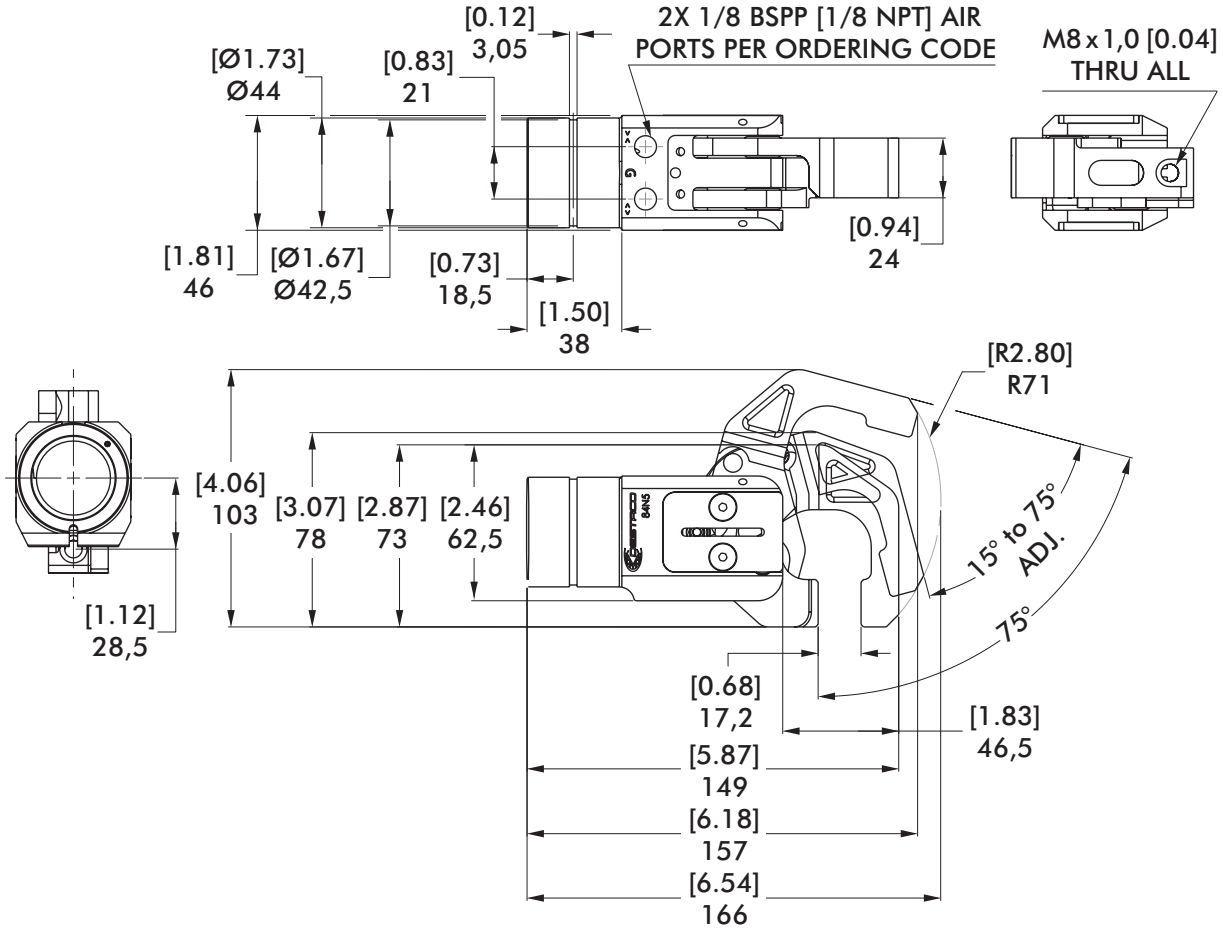

Dimensions and technical information are subject to change without notice

84N5 SERIES (MOVEABLE LOWER JAWS)

Accelerate® Press Shop Sheet Metal Grippers | Dimensions

DA Option: Moveable Double Open Jaws



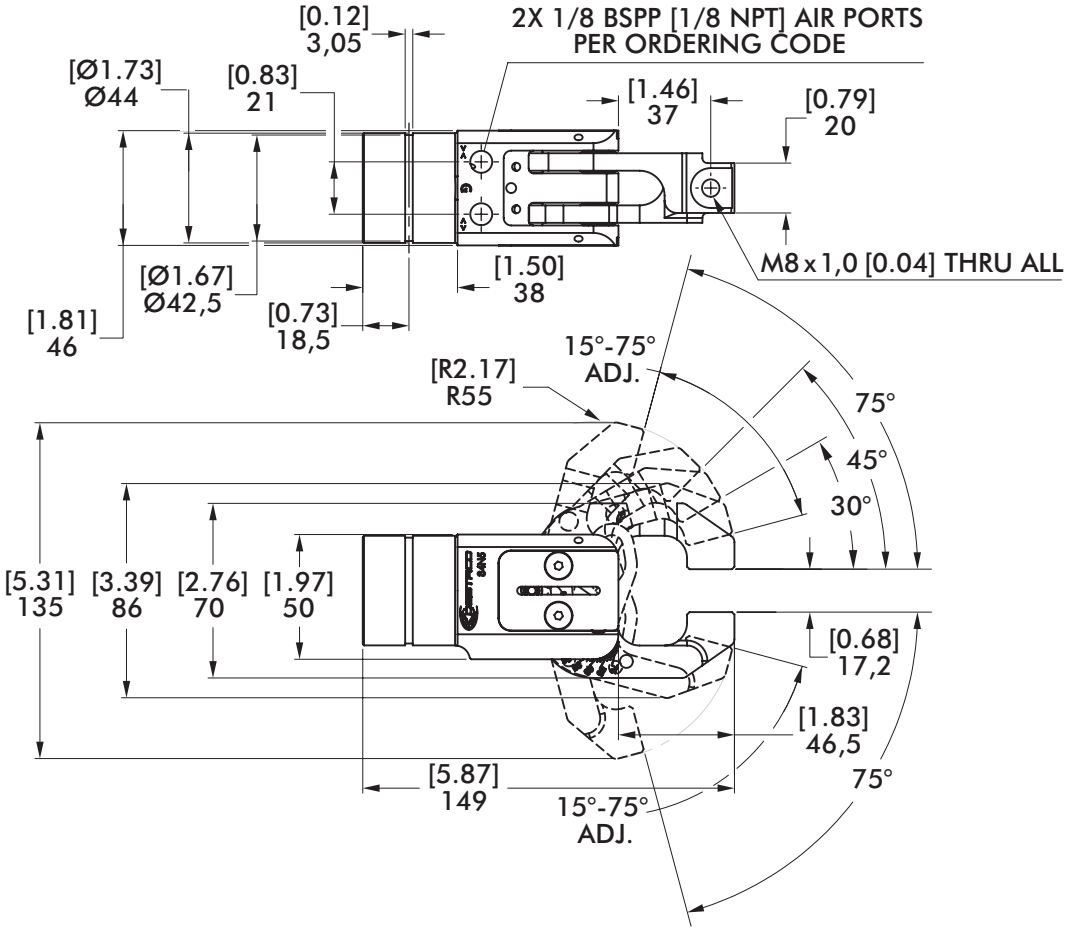

DR Option: Moveable Lower Drop Jaw



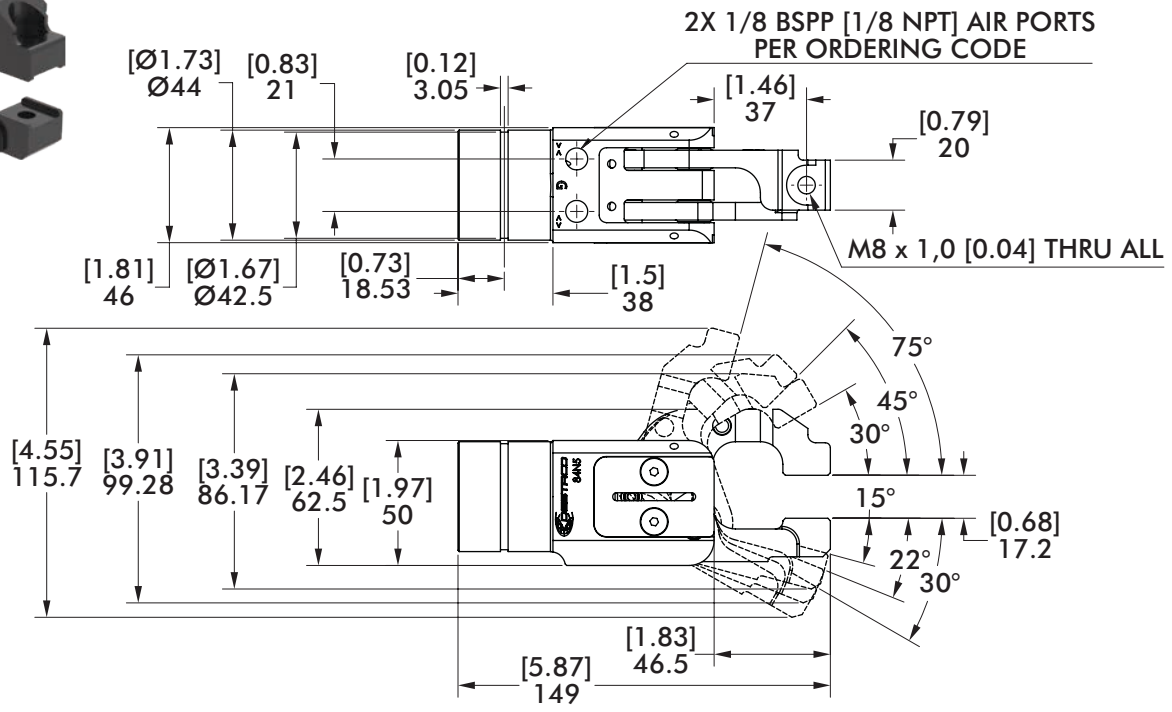

84N5 SERIES (MOVEABLE LOWER JAWS)

Accelerate® Press Shop Sheet Metal Grippers | Dimensions

SC/DC Option: Moveable Single/Double Chisel Lower Jaw



SC Single Chisel



DC Double Chisel

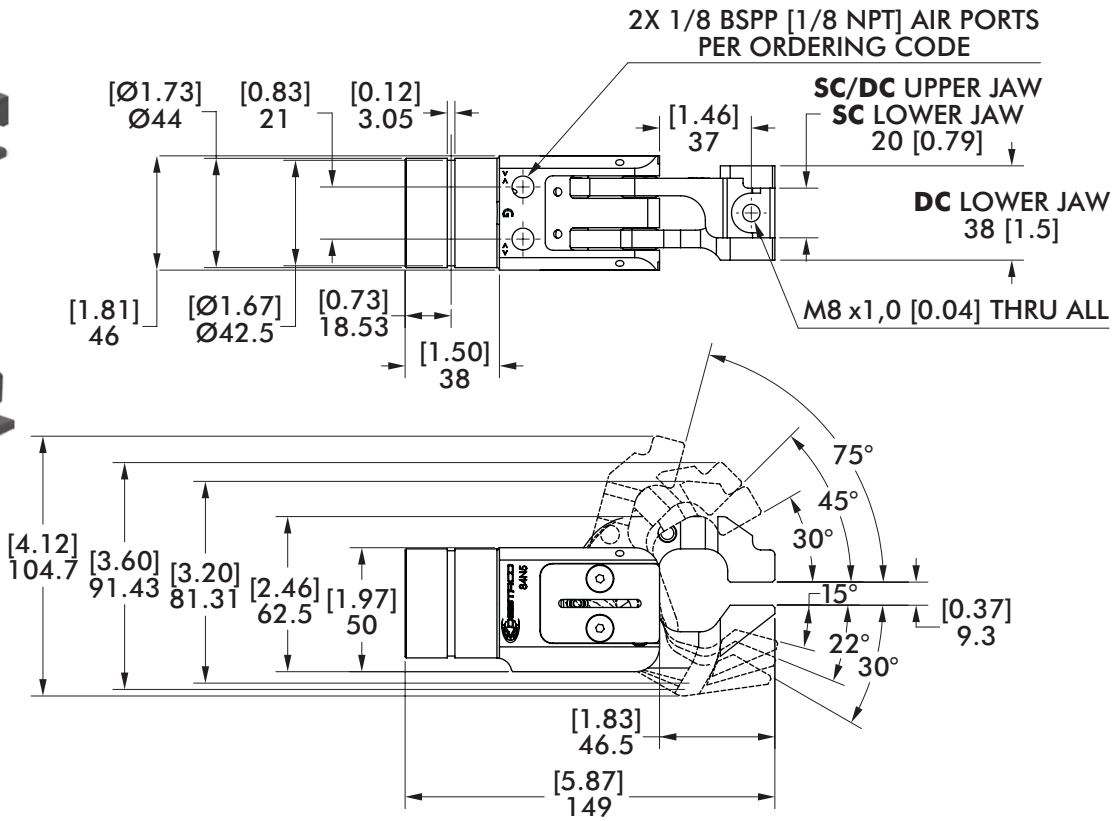

EJ Option: Moveable Extended Lower Jaw



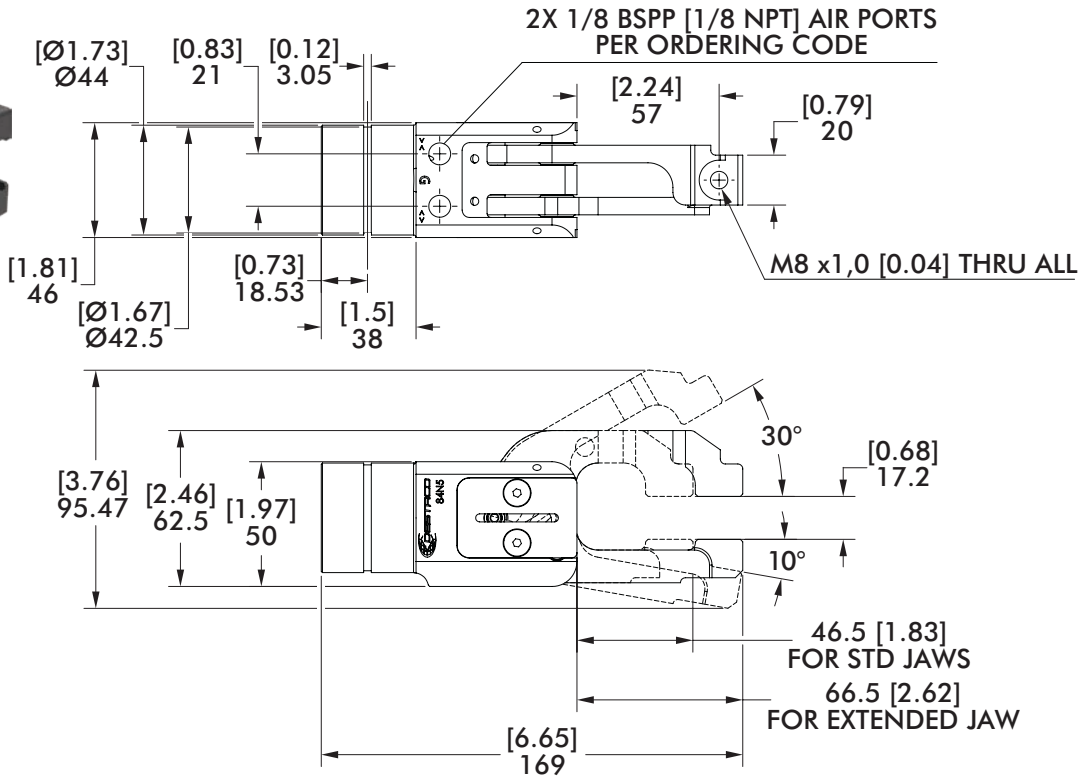

Dimensions and technical information are subject to change without notice

84N5 SPECIFICATIONS/FIXED LOWER JAWS KITS

Accelerate® Press Shop Sheet Metal Grippers | Specifications and Ordering Information

Specifications

Specification	Unit	84N5
Grip Force at 5 bar	N [lbf]	up to 1200 [270]
Weight (FA jaws - no tips)	Kg [lb]	0,68 [1.50]
Size L x W x H (Open)	mm [in]	149 x 46 x 95 [5.87] x [1.81] x [3.74]
Actuation Time	ms	70
Minimum Operating Pressure	bar [psi]	4 [58]
Opening Angles:		
Upper Jaws		30°, 45°, 75°, ADJ (15°-75°)
Lower Jaws		10°, 15°, 22°, 30°, 75°, ADJ (15°-75°)
Piston Ø	mm [in]	32 [1.26]
Air Consumption/Cycle	L [in3]	0,036 [2.20]
Temperature Range	C° [F°]	-35° to 80° [-31° to 176]

Fixed Lower Jaw Replacement Kits

All kits include 2 jaws, 2 pivot pins, 2 cam follower bushings, 1 cam follower and 4 flat head cap screws.



Straight Fixed Lower Jaw		Part #
Upper Jaw	Lower Jaw	
30°	0°	**84N5-300-FA-KIT**
45°	0°	**84N5-400-FA-KIT**
75°	0°	**84N5-FA-KIT**



90° Straight Fixed Lower Jaw		Part #
Upper Jaw	Lower Jaw	
75°	0°	**84N5-PA-KIT**

84N5 MOVEABLE LOWER JAWS KITS

Accelerate® Press Shop Sheet Metal Grippers | Ordering Information

Moveable Lower Jaw Replacement Kits

All kits include 2 jaws, 2 pivot pins, 2 cam follower bushings, 1 cam follower and 4 flat head cap screws.



Double Open Jaw		Part #
Upper Jaw	Lower Jaw	
30°	75°	**84N5-375-DA-KIT**
45°	75°	**84N5-475-DA-KIT**
75°	75°	**84N5-DA-KIT**



Extended Drop Jaw		Part #
Upper Jaw	Lower Jaw	
30°	10°	**84N5-310-EJ-KIT**



Single Chisel Jaw		Part #
Upper Jaw	Lower Jaw	
30°	15°	**84N5-315-SC-KIT**
30°	22°	**84N5-322-SC-KIT**
30°	30°	**84N5-330-SC-KIT**
45°	15°	**84N5-415-SC-KIT**
45°	22°	**84N5-422-SC-KIT**
45°	30°	**84N5-430-SC-KIT**
75°	15°	**84N5-715-SC-KIT**
75°	22°	**84N5-722-SC-KIT**
75°	30°	**84N5-730-SC-KIT**



Double Chisel Jaw		Part #
Upper Jaw	Lower Jaw	
30°	15°	**84N5-315-DC-KIT**
30°	22°	**84N5-322-DC-KIT**
30°	30°	**84N5-330-DC-KIT**
45°	15°	**84N5-415-DC-KIT**
45°	22°	**84N5-422-DC-KIT**
45°	30°	**84N5-430-DC-KIT**
75°	15°	**84N5-715-DC-KIT**
75°	22°	**84N5-722-DC-KIT**
75°	30°	**84N5-730-DC-KIT**



Drop Jaw		Part #
Upper Jaw	Lower Jaw	
30°	15°	**84N5-315-DR-KIT**
30°	22°	**84N5-322-DR-KIT**
30°	30°	**84N5-330-DR-KIT**
45°	15°	**84N5-415-DR-KIT**
45°	22°	**84N5-422-DR-KIT**
45°	30°	**84N5-430-DR-KIT**
75°	15°	**84N5-715-DR-KIT**
75°	22°	**84N5-722-DR-KIT**
75°	30°	**84N5-730-DR-KIT**

Dimensions and technical information are subject to change without notice

Notes

84N1, 84N2 MOUNTS

Accelerate® Press Shop Sheet Metal Grippers | Dimensions and Ordering Information

Side Ball and Apple Core Mounts

Side Ball



Apple Core



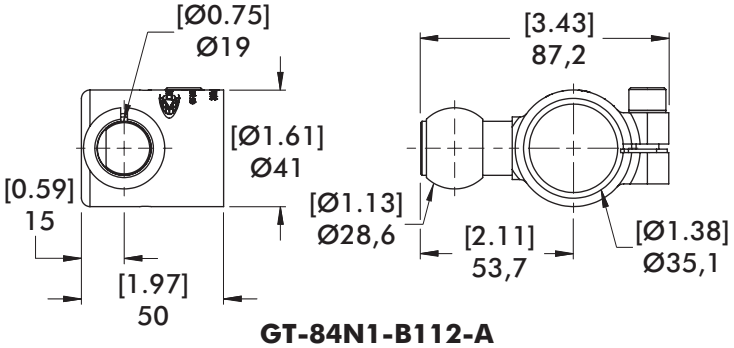

GT-84N1-B112-A

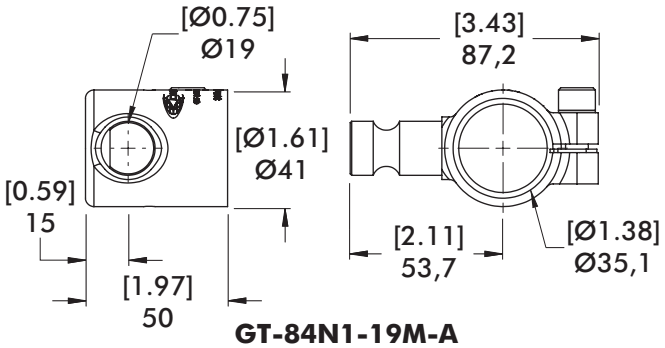

GT-84N1-19M-A

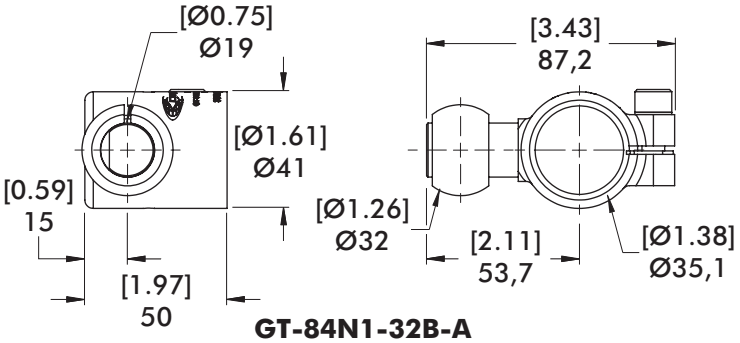

GT-84N1-32B-A

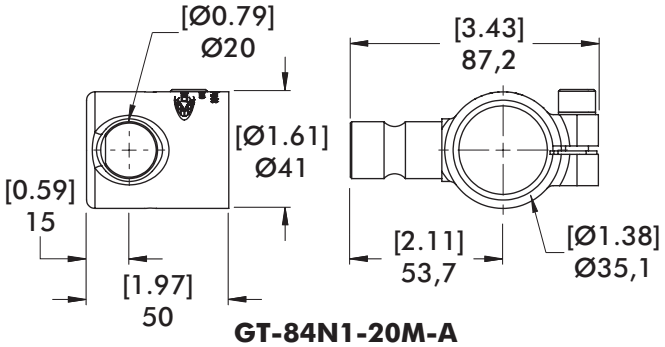

GT-84N1-20M-A

Rear Ball and Flange Mounts

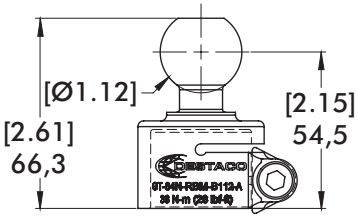

GT-84N-RBM-B112-A

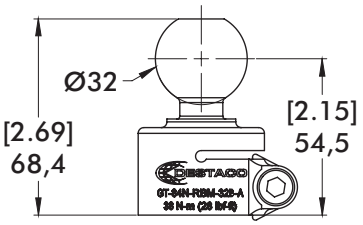

GT-84N-RBM-32B-A

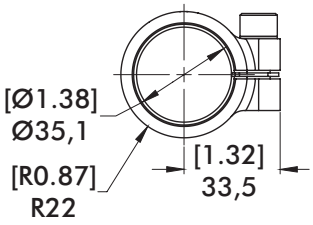

Rear Ball



Rear Flange



GT-84N-RFM-2213-A

Side Ball and Apple Core	Part #
1.125 in. (28.5mm) Side Ball	**GT-84N1-B112-A**
32mm Side Ball	**GT-84N1-32B-A**
19mm Applecore	**GT-84N1-19M-A**
20mm Applecore	**GT-84N1-20M-A**

Rear Ball and Flange	Part #
1.125 in. (28.5mm) Rear Ball	**GT-84N-RBM-B112-A**
32mm Rear Ball	**GT-84N-RBM-32B-A**
Rear Flange	**GT-84N-RFM-2213-A**

Dimensions and technical information are subject to change without notice

84N1, 84N2 MOUNTS

Accelerate® Press Shop Sheet Metal Grippers | Dimensions and Ordering Information

Parallel Swivel Mounts

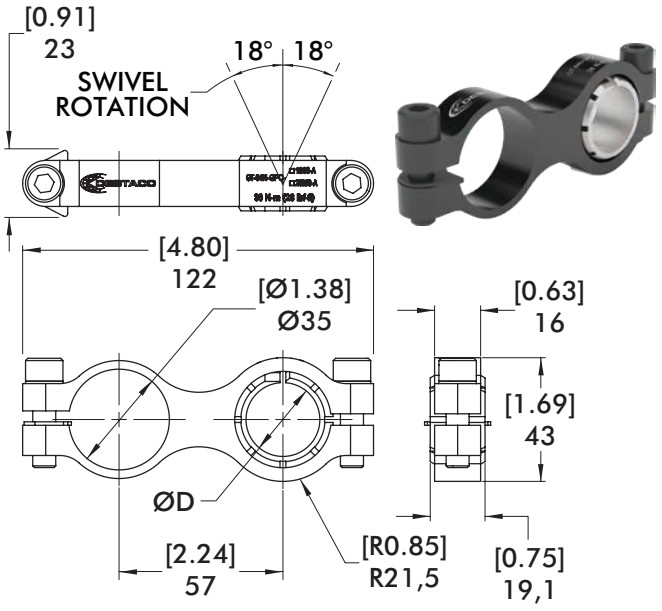

ØD=1.00 in. **GT-84N-GPC-100S-A**
ØD=25mm **GT-84N-GPC-25MS-A**

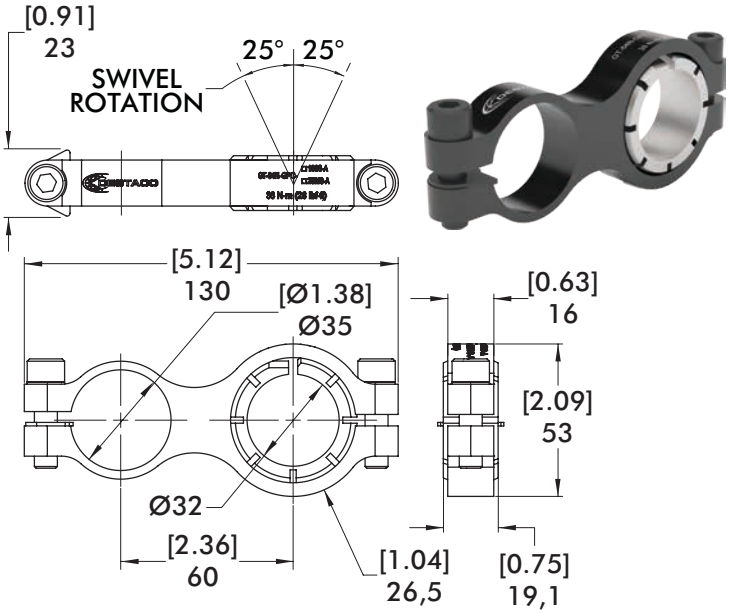

GT-84N-GPC-125S-A

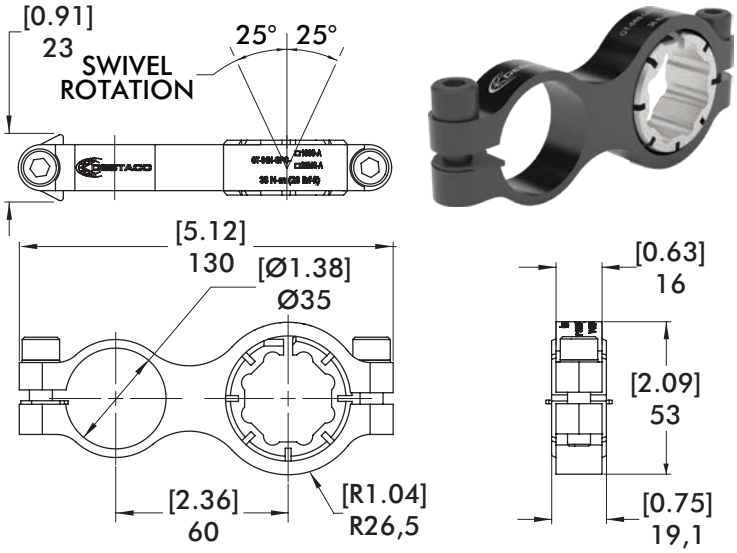

GT-84N-GPC-30BBS-A

Parallel Swivel Mount	Part #
1 in. Swivel Mount	**GT-84N-GPC-100S-A**
1-1/4 in. Swivel Mount	**GT-84N-GPC-125S-A**
25mm Swivel Mount	**GT-84N-GPC-25MS-A**
30mm Body Builder Swivel Mount	**GT-84N-GPC-30BBS-A**

Rear Swivel Mount

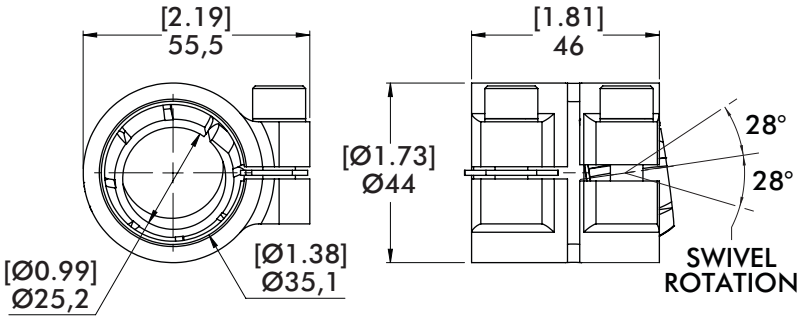

GT-84N-RSM-25MS-A



Rear Swivel Mount	Part #
25mm Swivel Mount	**GT-84N-RSM-25MS-A**

84N5 MOUNTS

Accelerate® Press Shop Sheet Metal Grippers | Dimensions and Ordering Information

Side Ball and Apple Core Gripper Mounts

Side Ball



Apple Core



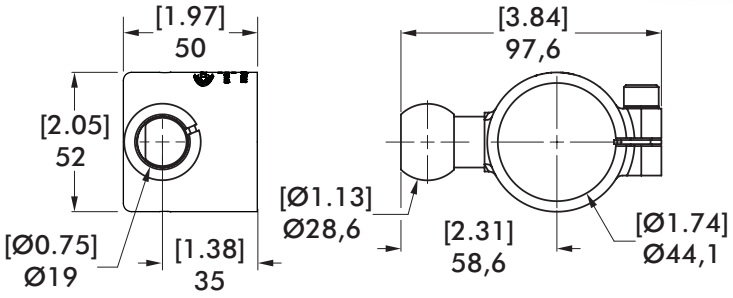

GT-84N5-B112-A

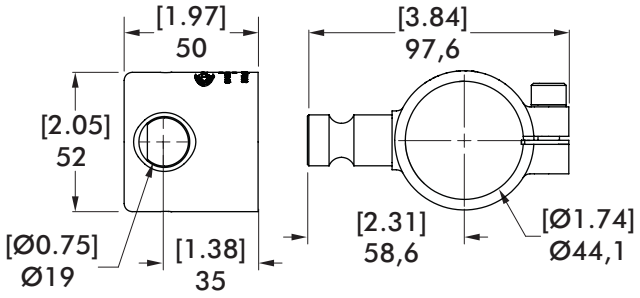

GT-84N5-19M-A

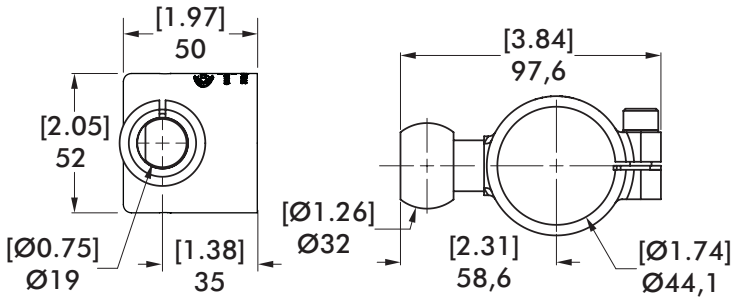

GT-84N5-32B-A

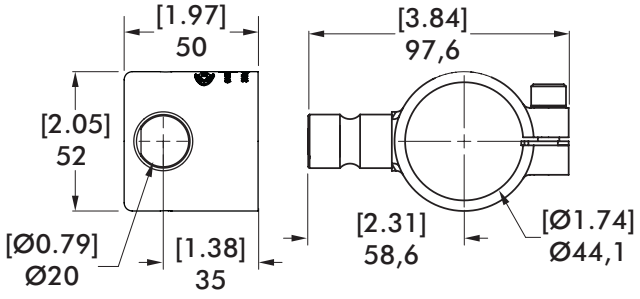

GT-84N5-20M-A

Rear Ball and Flange Gripper Mounts

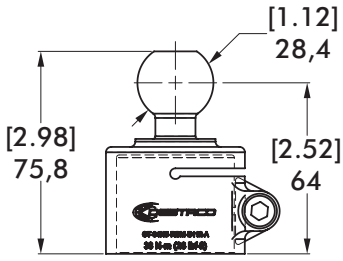

GT-84N5-RBM-B112-A

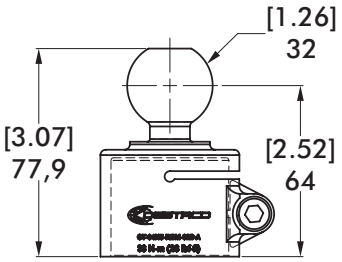

GT-84N5-RBM-32B-A

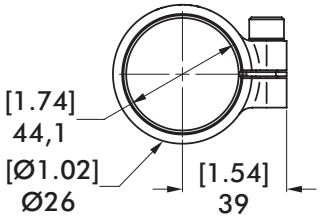

Rear Ball



Rear Flange



GT-84N5-RFM-2213-A

Side Ball and Apple Core	Part #
1.125 in. (28.5mm) Side Ball	**GT-84N5-B112-A**
32mm Side Ball	**GT-84N5-32B-A**
19mm Applecore	**GT-84N5-19M-A**
20mm Applecore	**GT-84N5-20M-A**

Rear Ball and Flange	Part #
1.125 in. (28.5mm) Rear Ball	**GT-84N5-RBM-B112-A**
32mm Rear Ball	**GT-84N5-RBM-32B-A**
Rear Flange	**GT-84N5-RFM-2213-A**

Dimensions and technical information are subject to change without notice

84N5 MOUNTS

Accelerate® Press Shop Sheet Metal Grippers | Dimensions and Ordering Information

Parallel Swivel Gripper Mount

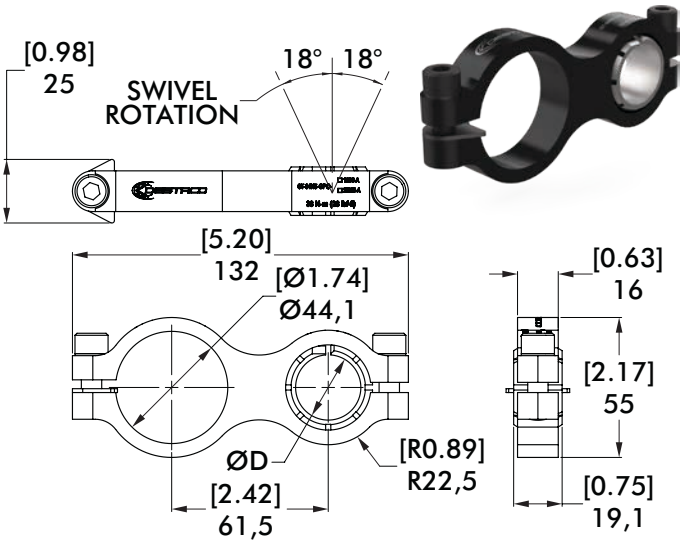

ØD= 1.00 in. **GT-84N5-GPC-100S-A**
ØD= 25mm. **GT-84N5-GPC-25MS-A**

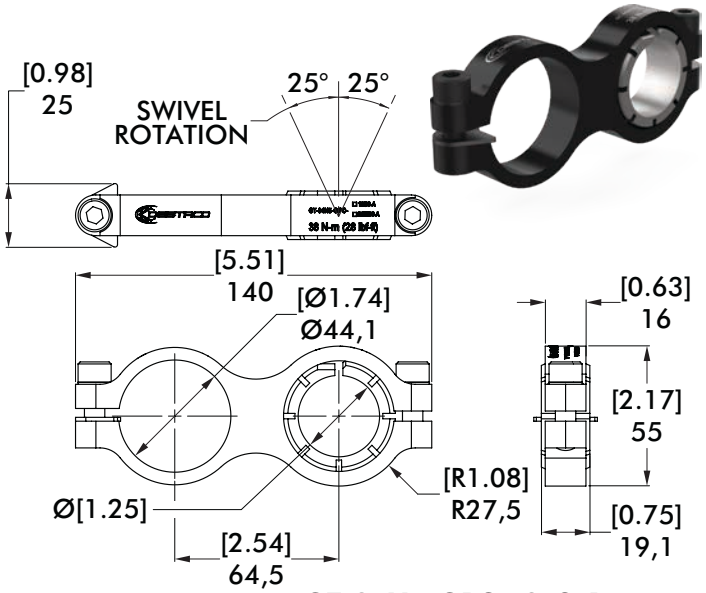

GT-84N5-GPC-125S-A

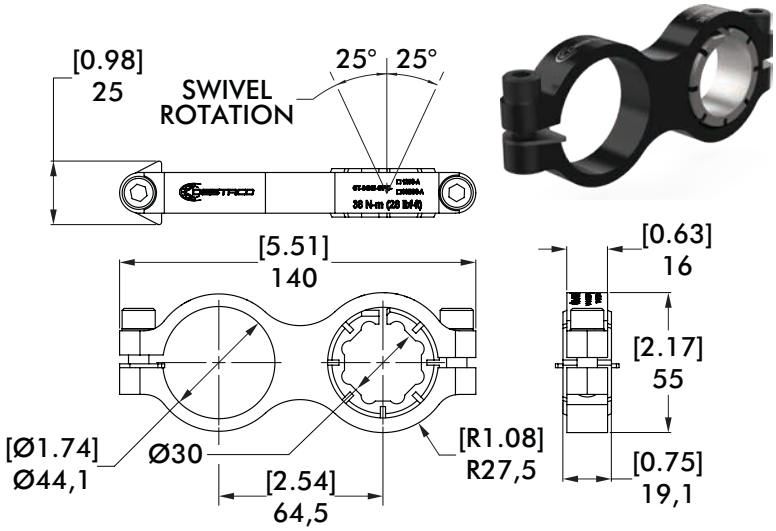

GT-84N5-GPC-30BBS-A

Parallel Swivel Mounts	Part #
1" Swivel Mount	**GT-84N5-GPC-100S-A**
1-1/4" Swivel Mount	**GT-84N5-GPC-125S-A**
25mm Swivel Mount	**GT-84N5-GPC-25MS-A**
30mm Body Builder Swivel Mount	**GT-84N5-GPC-30BBS-A**

Rear Clamp Swivel Mount

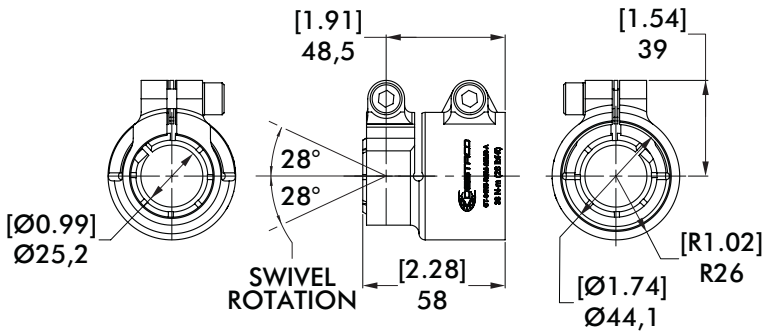

GT-84N5-RSM-25MS-A



Rear Swivel Mount	Part #
25mm Swivel Mount	**GT-84N5-RSM-25MS-A**

84N1 SINGLE TIPS

Accelerate® Press Shop Sheet Metal Grippers | Dimensions and Ordering Information

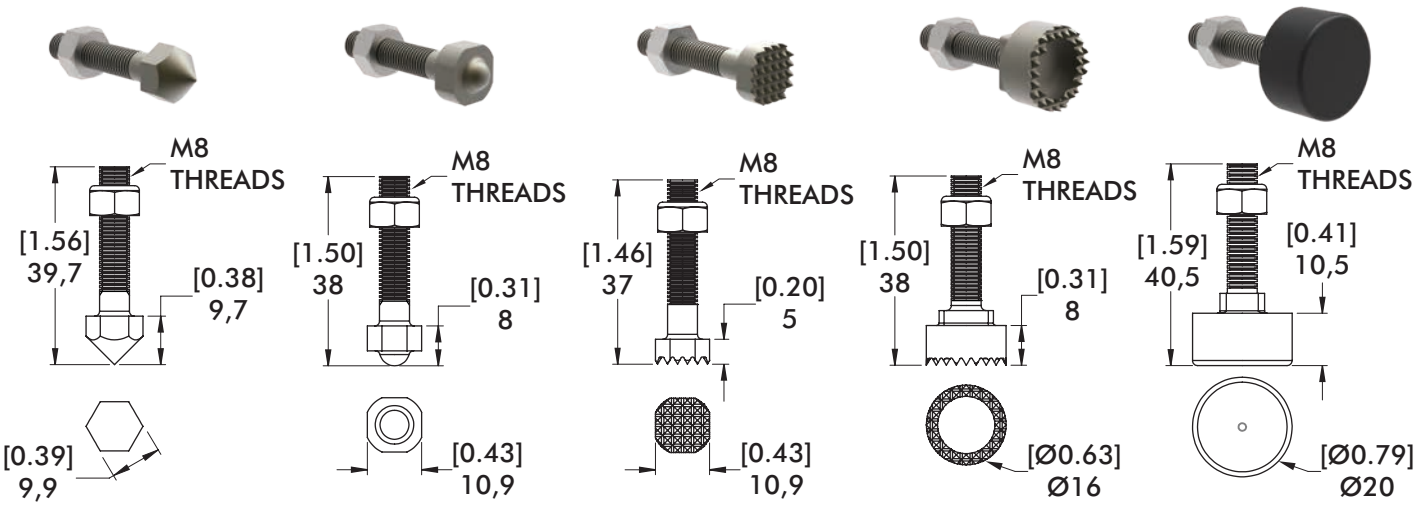

Point Tip	Peen Tip	Serrated Tip (for all Jaw Styles except **FA**)	Serrated Tip (for **FA** Jaw Style only)	Polyurethane Tip
Part #	Part #	Part #	Part #	Part #
8JD-1001-1	**8JD-1003-1**	**8JD-1002-1**	**8JD-1004-1**	**8JD-1005-1**

Dimensions and technical information are subject to change without notice

84N2, 84N5 SINGLE TIPS

Accelerate® Press Shop Sheet Metal Grippers | Dimensions and Ordering Information

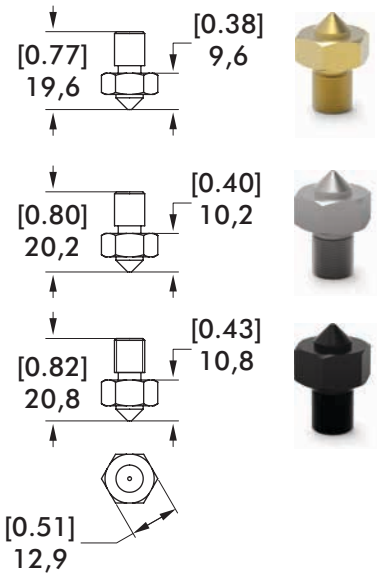

Single Cone	Part #
Gold	8JD-1013-1
Silver	8JD-1012-1
Black	8JD-1011-1

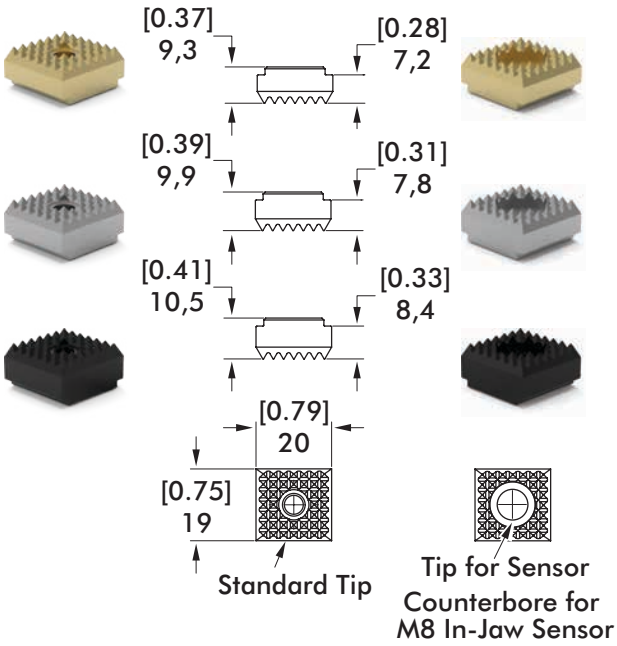

Single Serrated	Standard Tip	Tip for Sensor
Gold	8JD-1019-1	8JD-1028-1
Silver*	8JD-1018-1	8JD-1027-1
Black*	8JD-1017-1	8JD-1026-1

*Includes optional shims for use with SC and DC chisel jaw options.

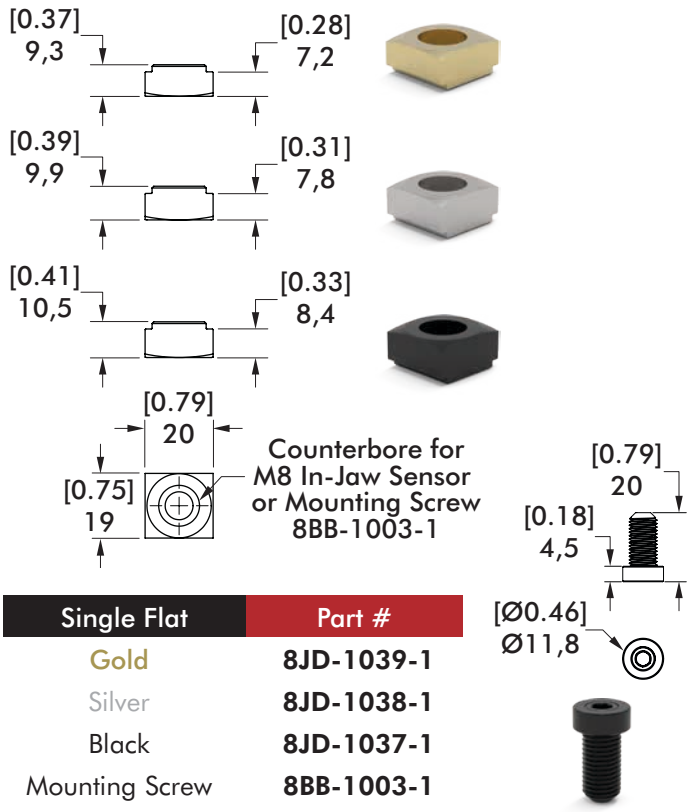

Single Flat	Part #
Gold	8JD-1039-1
Silver	8JD-1038-1
Black	8JD-1037-1
Mounting Screw	8BB-1003-1

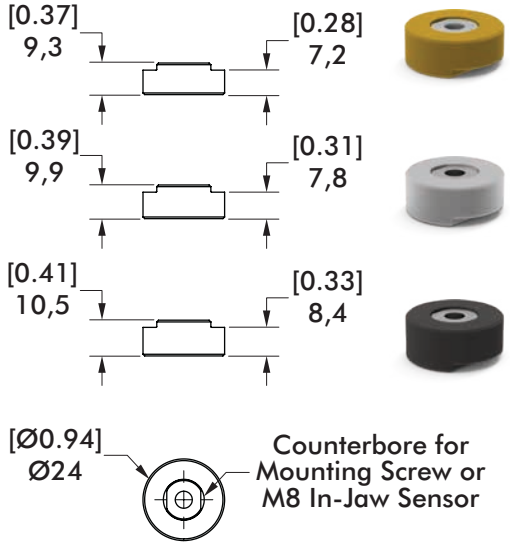

Single Polyurethane	Part #
Gold	8JD-1042-1
Silver	8JD-1041-1
Black	8JD-1040-1

84N2, 84N5 DOUBLE TIPS

Accelerate® Press Shop Sheet Metal Grippers | Dimensions and Ordering Information

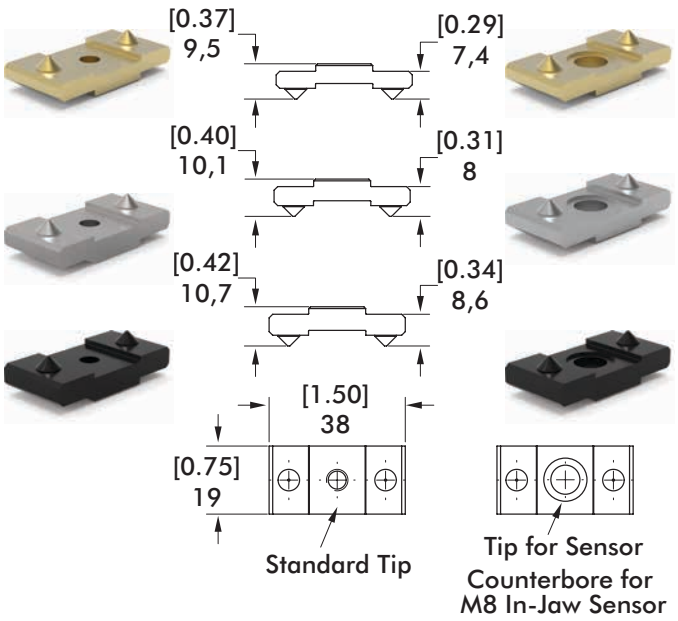

Double Cone	Standard Tip	Tip for Sensor
Gold	**8JD-1016-1**	**8JD-1025-1**
Silver	**8JD-1015-1**	**8JD-1024-1**
Black	**8JD-1014-1**	**8JD-1023-1**

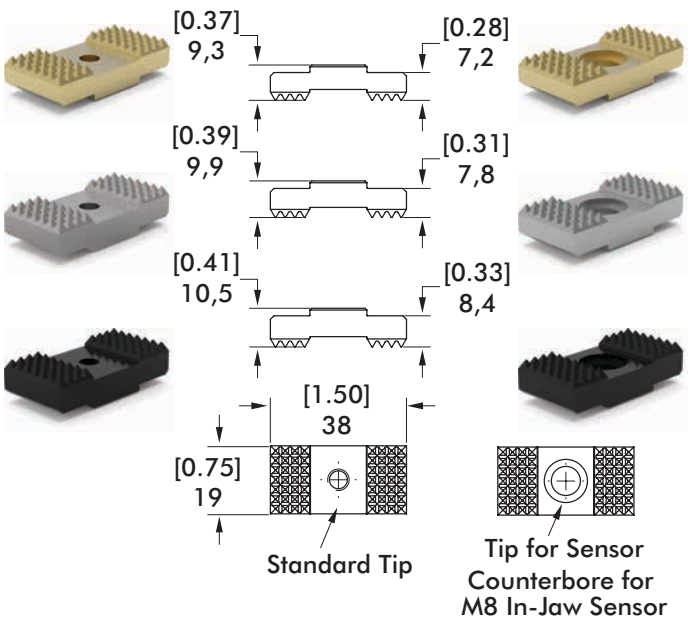

Double Serrated	Standard Tip	Tip for Sensor
Gold	**8JD-1022-1**	**8JD-1036-1**
Silver*	**8JD-1021-1**	**8JD-1035-1**
Black*	**8JD-1020-1**	**8JD-1034-1**

*Includes optional shims for use with **SC** and **DC** chisel jaw options.

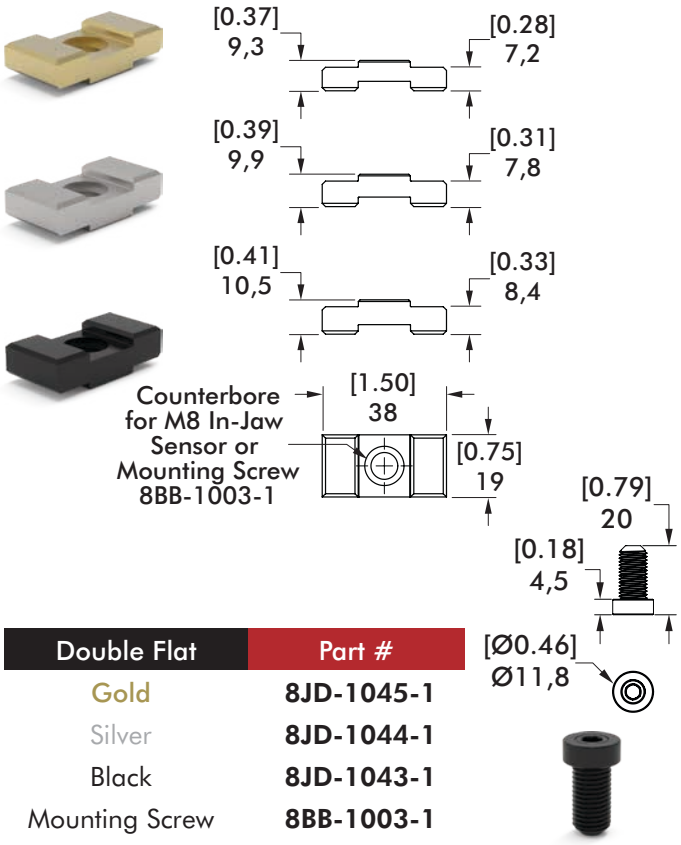

Double Flat	Part #
Gold	**8JD-1045-1**
Silver	**8JD-1044-1**
Black	**8JD-1043-1**
Mounting Screw	**8BB-1003-1**

Dimensions and technical information are subject to change without notice

84N1, 84N2 SENSING OPTIONS

Accelerate® Press Shop Sheet Metal Grippers | Dimensions and Ordering Information

Jaw Part Present Sensor (84N1 only)

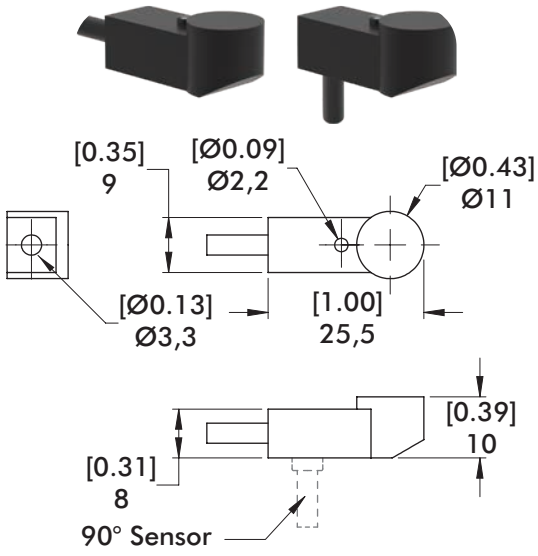

Description	Part #
PNP Inductive Part Present Sensor Kit	**8EA-1024-1**
NPN Inductive Part Present Sensor Kit	**8EA-1025-1**
90° PNP Inductive Part Present Sensor Kit**	**8EA-1027-1**
90° NPN Inductive Part Present Sensor Kit**	**8EA-1028-1**
Quick Disconnect 2 Meter Cable Length*	**CABL-010**
Quick Disconnect 5 Meter Cable Length*	**CABL-013**

*Sensor and cable sold separately. **for **84N1 PC** Jaw Style only.

2-Point Side Mount Sensing (84N1, 84N2 only)

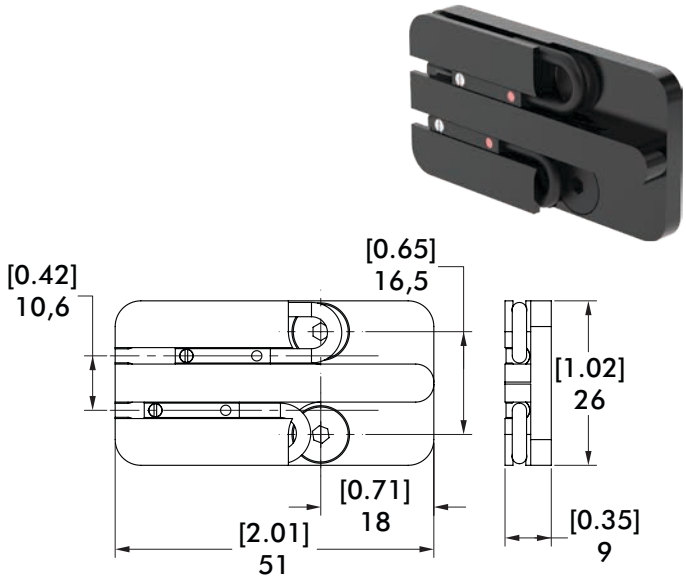

Description	Part #
PNP Magneto-Resistive Sensor Kit (Inc. 2 Sensors)	**8EA-1035-1**
NPN Magneto-Resistive Sensor Kit (Inc. 2 Sensors)	**8EA-1036-1**
4mm PNP Magneto-Resistive Sensor Only (Qty. 1)	**OHSP-017**
4mm NPN Magneto-Resistive Sensor Only (Qty. 1)	**OHSN-017**
Quick Disconnect 2 Meter Cable Length*	**CABL-010**
Quick Disconnect 5 Meter Cable Length*	**CABL-013**

*Sensor and cable sold separately.

Infrared Part Present Sensor and Mounting Adapter (84N1, 84N2 only)

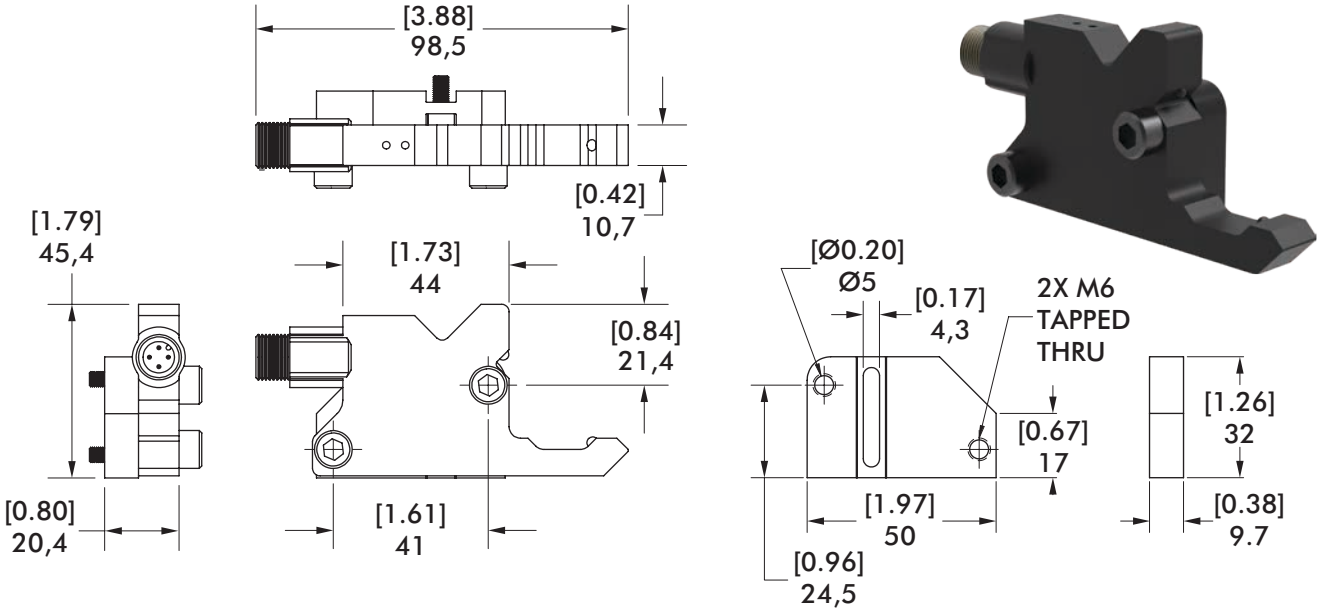

Description	Part #
84N1/84N2 Infrared Part Present Sensor Kit	**8EA-1023-1**

84N2, 84N5 SENSING OPTIONS

Accelerate® Press Shop Sheet Metal Grippers | Dimensions and Ordering Information

In-Jaw Part Sensor (84N2, 84N5 only)



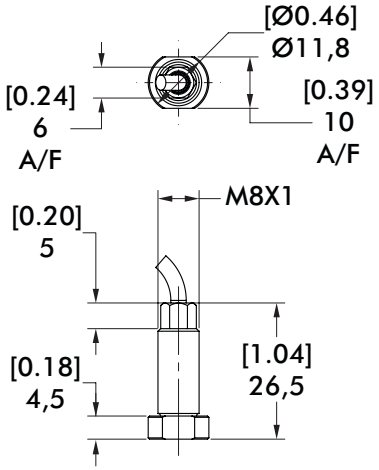

Description	Part #
PNP Inductive In-Jaw Sensor	**8EA-1033-1**
NPN Inductive In-Jaw Sensor	**8EA-1034-1**
Quick Disconnect 2M Cable Length*	**CABL-010**
Quick Disconnect 5M Cable Length*	**CABL-013**

*Sensor and cable sold separately.

2-Point Side Mount Sensing (84N5 only)



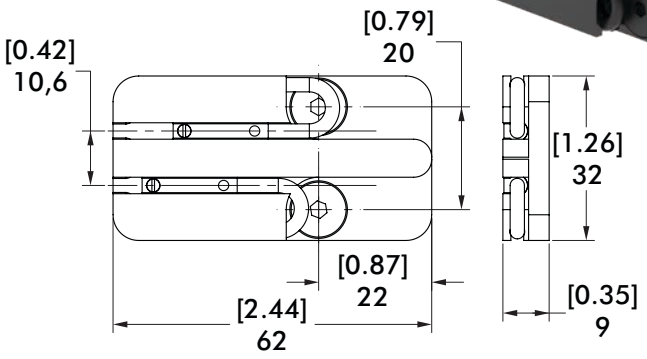

Description	Part #
PNP Magneto-Resistive Sensor Kit (Inc. 2 Sensors)	**8EA-1052-1**
NPN Magneto-Resistive Sensor Kit (Inc. 2 Sensors)	**8EA-1053-1**
4mm PNP Magneto-Resistive Sensor Only (Qty. 1)	**OHSP-017**
4mm NPN Magneto-Resistive Sensor Only (Qty. 1)	**OHSN-017**
Quick Disconnect 2M Cable Length*	**CABL-010**
Quick Disconnect 5M Cable Length*	**CABL-013**

*Sensor and cable sold separately.

84N ACCESSORIES

Accelerate® Press Shop Sheet Metal Grippers | Dimensions and Ordering Information



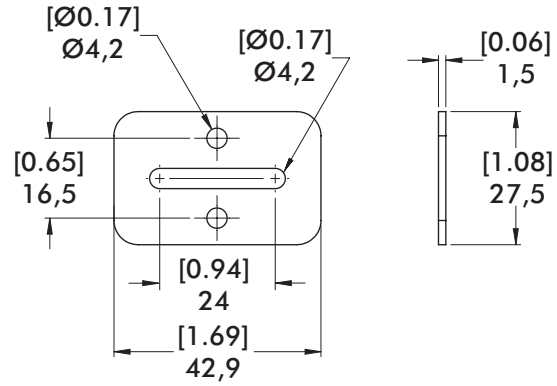

Sheet Stop Options



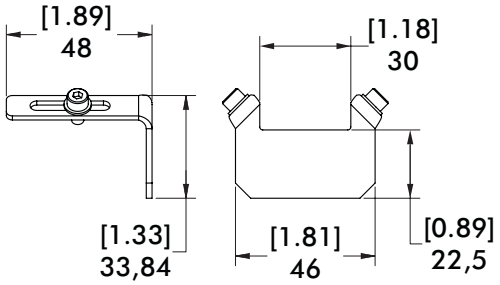

Description	Part #
84N1/84N2 Sheet Stop Kit	**8MH-1003-1**

Includes socket head cap mounting screws.

Description	Part #
84N5 Sheet Stop Kit	**8MH-1053-1**

Includes socket head cap mounting screws.

Opening Angle Adjustment Kit (84N5 only*)



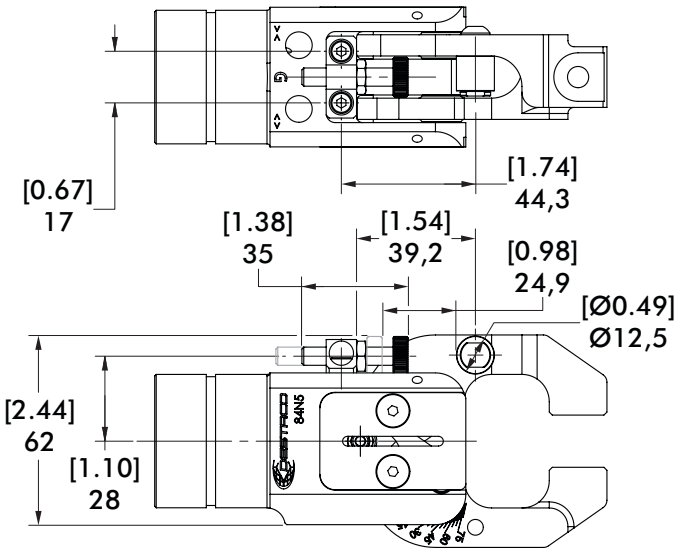

Description	Part #
84N5 Opening Angle Adjustment Kit	**8MH-1052-1**

Includes mounting screws. *For **FA**, **PA** and **DA** models **-075** and **-ADJ** only.

Seal Kits



Description	Part #
84N1/84N2 Seal Kit	**SLKT-478**
84N5 Seal Kit	**SLKT-479**

Includes shock pad, rod u-cup seal, o-ring cap, piston seal and retainer ring.

GRIPPERS/SLIDES/ROTARIES

Table of Contents

Introduction:

North American Xpress Program GR-PRO-2
European Xpress Program GR-PRO-3
Clean Room Solutions GR-PRO-6
Robotic Tooling Solutions GR-PRO-7
Modular Mounting Solutions/DirectConnect™ GR-PRO-11
Product Sizing and Application Charts GR-TCH-1


Electric Grippers ..... GR-EPG


Precision Grippers ..... GR-PRC


General Industrial Grippers .. GR-GEN


Heavy Duty Grippers .....GR-HDP


OEM Machine Builder.....GR-OEM

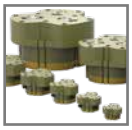
3-Jaw Parallel Grippers GR-3JP


Angular Grippers.....GR-ANG


Specialty Grippers ..... GR-SPC


Rotary Actuators ..... GR-ROT


Linear Slides..... GR-LIN


Feed Escapements..... GR-ESC

NORTH AMERICAN XPRESS PROGRAM

A Full Line of Automation Products to Meet Your Application Needs Quickly

XPRESS FAST LOCAL DELIVERY *ON OUR MOST POPULAR PRODUCTS*

To choose the best and most cost-effective automation solution for your application please contact your DESTACO sales representative or DESTACO customer service.

Product listed below are for North American Market only.

Parallel Grippers

		SIZE	STROKE [mm]	FORCE [N]
	HEAVY DUTY **RDH/RTH Series** 2 & 3 Jaw Impact Resistant Shielded Gripper	1, 2, 3, 4, 5 -L Stroke option	4.0-26	125-675
	HEAVY DUTY **RP Series** Rugged Impact Resistant Gripper	5, 10, 11, 12, 15	4.0-12.7	156-311
	**RPL/RPLC Series** Zero Side Play, High Repeatability Gripper	1, 2, 3, 4 (C)=Clean Room Version	6.4-25.4	116-160
	**RPM/RPMC Series** Low Friction Micro Gripper	1, 2, 3, (C)=Clean Room Version	4.1-6.3	36
	**DPG Series** Modular Multi-Part Sensing Gripper	10M-2	12.7	222
	HEAVY DUTY **DPW Series** Wide Parts/ Long Finger Gripper	250, 375, 500	19.05-63.5	222-800
	HEAVY DUTY **RPW Series** Wide Parts/ Long Finger Gripper	625	50.8-88.9	1068

Angular Grippers

		SIZE	ANGLE	FORCE [N]
	**RA Series** Low Cost Small Size Angular Gripper	RA-5	15° (per finger)	89

Rotary Actuators

		SIZE	ANGLE	PAYLOAD [Kg]
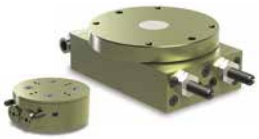	**RR Series** High Torque Compact Rotary Actuators	18, 28, 36	0-180°	0.45-3.6

EUROPEAN XPRESS PROGRAM

A Full Line of Automation Products to Meet Your Application Needs Quickly

XPRESS FAST LOCAL DELIVERY *ON OUR MOST POPULAR PRODUCTS*

To choose the best and most cost-effective automation solution for your application please contact your DESTACO sales representative or DESTACO customer service.

Product listed below are for European Market only.

2-Jaw Parallel Grippers		SIZE	STROKE [mm]	FORCE [N]
	HEAVY DUTY **RDH Series** Impact Resistant Shielded Gripper	All Sizes	4-70	361-28002
	**2P Series** Precision Cylindrical Gripper	All Sizes	10-30	109-3043
	**REP-2 Series** Cylindrical Shielded Gripper	All Sizes	10-30	480-3351
	**DGC Series** Precision Long Stroke Gripper	All Sizes	20-60	474-2318
	**DPG Series** Modular Gripper	All Sizes	6.4-25.4	222
	**DPW Series** Wide Parts/ Long Finger Gripper	All Sizes	19.1-63.5	222-800
	HEAVY DUTY **RPW Series** Wide Parts/ Long Finger Gripper	625, 750	19.1-114.3	222-2091
	HEAVY DUTY **RP Series** Rugged Impact Resistant Gripper	All Sizes	4.0-50.8	40-3336
	**DPL Series** Long Stroke, Low Profile Gripper	All Sizes	40-140	811-2035
	**CP Series** Compact Gripper	All Sizes	4-32	10-2749
	**RPL/RPLC Series** Zero Side Play, High Repeatability Gripper	All Sizes (C)=Clean Room	6.4-25.4	116-160
	**RPM/RPMC Series** Low Friction Micro Gripper	All Sizes (C)=Clean Room	3.2-6.3	36
	**RDE Series** Water Immersion Gripper	Contact DESTACO for More Information		

Dimensions and technical information are subject to change without notice

EUROPEAN XPRESS PROGRAM

A Full Line of Automation Products to Meet Your Application Needs Quickly

XPRESS FAST LOCAL DELIVERY *ON OUR MOST POPULAR PRODUCTS*

To choose the best and most cost-effective automation solution for your application please contact your DESTACO sales representative or DESTACO customer service.

Product listed below are for European Market only.

3-Jaw Parallel Grippers

		SIZE	STROKE [mm]	FORCE [N]
	HEAVY DUTY **RTH Series** Impact Resistant Shielded Gripper	All Sizes	4-20	579-4562
	**3P Series** Precision Cylindrical Gripper	All Sizes	10-30	107-2030
	**REP-3 Series** Cylindrical Shielded Gripper	All Sizes	10-30	469-3268
	**PPC Series** Thru-Hole Gripper	All Sizes	10-30	896-4332
	**RTE Series** Water Immersion Gripper	Contact DESTACO for More Information		

Angular Grippers

		SIZE	ANGLE	FORCE [N]
	**RUA Series** Cylindrical Gripper	All Sizes	15.9-19.1° (per finger)	313-3941
	**DCT-CT Series** 180° Jaw Opening Gripper	All Sizes	90° (per finger)	32-893
	**RA Series** Compact Gripper	RA-6	15° (per finger)	71-801
	**FUA Series** Food Gripper	All Sizes	35° (per finger)	9-32

EUROPEAN XPRESS PROGRAM

A Full Line of Automation Products to Meet Your Application Needs Quickly

XPRESS FAST LOCAL DELIVERY *ON OUR MOST POPULAR PRODUCTS*

To choose the best and most cost-effective automation solution for your application please contact your DESTACO sales representative or DESTACO customer service.

Product listed below are for European Market only.

Rotary Actuators		SIZE	ANGLE	PAYLOAD [Kg]
	**RR Series Light-Duty** High Torque Compact Rotary Actuators	All Sizes	0-180°	0.45-1.3
	HEAVY DUTY **RR Series Heavy-Duty** High Torque Compact Rotary Actuators	All Sizes	0-180°	3.6-91

Feed Escapements		SIZE	STROKE [mm]	PARTS ESCAPED
	**RFE Series** 2-Finger Actuation	All Sizes	16-32	85-150 (per minute)

Tool Changers and Compliance		SIZE	PORTS	PAYLOAD [Kg]
	HEAVY DUTY **RQC/RTP Series** Heavy-Duty Tool Changer	All Sizes	19 pin Electrical and 6 Pneumatic Ports	90-550
	**QC/TP Series** Tool Changer	All Sizes	12-15 pin Electrical and 4 Pneumatic Ports	30-150
	**CH Series** Horizontal Compliance	All Sizes	N/A	2-40
	**AU Series** Resettable Emergency Stop Module	Contact DESTACO for More Information		

Dimensions and technical information are subject to change without notice

CLEAN ROOM RATED SOLUTIONS

DESTACO's Clean Room Rated Solutions are geared toward laboratory, semiconductor, medical, and food handling type environments. Many of our pneumatic products include a scavenge or purge port. These extra ports create internal vacuum or pressure to control contaminants escaping into the environment or prevent de-greaser or other chemicals penetrating our product.

Solutions include:

- Diverse line-up of products for class 10/100 cleanroom environments
- Manufactured with corrosion-resistant materials for use with de-ionized water
- Customized solutions available with food and medical grade lubricants, stainless steel, and nickel-plated materials to meet your application requirements.

	Electric Parallel Grippers		
Rating	RPE-100	DPE-200	DPE-400
ISO 4 (Class10)	● ◎		
ISO 5 (Class100)	●		●
ISO 6 (Class1,000)	●	●	●
ISO 7 (Class10,000)	●	●	●
ISO 8 (Class100,000)	●	●	●

	Pneumatic 2-Jaw and 3-Jaw Grippers								
Rating	RPMC	RPLC	DPDS	DPDL	DPG	DPP	RDH	RTH	DCT
ISO 4 (Class10)	● ◎	● ◎	● ◎						
ISO 5 (Class100)	● ◎	● ◎	● ◎	● ◎	●		● ◎	● ◎	●
ISO 6 (Class1,000)	● ◎	● ◎	●	●	●		●	●	●
ISO 7 (Class10,000)	●	●	●	●	●	●	●	●	●
ISO 8 (Class100,000)	●	●	●	●	●	●	●	●	●

	Linear Slides		
Rating	DLB	DLT	DLM
ISO 4 (Class10)			
ISO 5 (Class100)			
ISO 6 (Class1,000)	●	●	●
ISO 7 (Class10,000)	●	●	●
ISO 8 (Class100,000)	●	●	●

Rating	RR
ISO 4 (Class10)	
ISO 5 (Class100)	
ISO 6 (Class1,000)	
ISO 7 (Class10,000)	
ISO 8 (Class100,000)	●

●	Standard Clean Room
◎	With use of Scavenge Port

Note: All products tested using Krytox™ Grease. Please contact factory for individual test results and additional clean room requirements.

ROBOTIC TOOLING SOLUTIONS

CLICK OR SCAN
To view full catalog pages on these product

Automatic Tool Changers | Features and Benefits

Automatic Tool Changers

Robotic Applications:
Perfect for those flexible/multiple tooling applications utilizing one Robot. This product was designed with exceptional repeatability, high rigidity & load capacity to make it ideal for any robotic application.

Automation Applications:
End effector tooling and interchangeable fixturing can be changed quickly and easily to accommodate many different styles of parts on the same assembly machine or machining center.

Highly Configurable, Modular Design (RQC/RTP):
The Modular RQC series easily accommodates up to (4) optional modular interfaces, offering a high level of flexibility.

Mounting Information

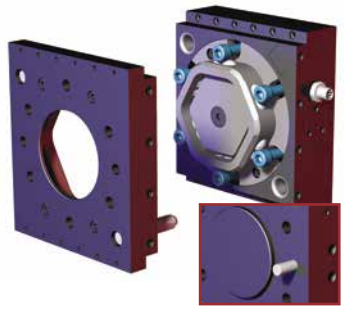

RQC Robot Plate Adaptor
Counterbored holes for mounting with a dowel pin hole, a raised boss for location and a ISO9409-1 mounting pattern.

Back Side of RQC



RTP Tool Plate Adaptor
Tapped holes, two dowel pin holes for accurate location of payload and a ISO9409-1 mounting pattern.



QC Robot Plate Adaptor
has counterbored holes for mounting and two dowel pins for hole location (size 30 has pilot boss).



TP Tool Plate Adaptor
has counterbored holes for mounting and two dowel pins for hole location (size 30 has pilot boss).



RHC Robot Plate Adaptor
mounts with screws from behind or through the front and locates with dowel pins for accuracy.



RHC Tool Plate Adaptor
mounts payload with screws from behind or through the front and locates with dowel pins for accuracy. Protect cone surfaces from debris to insure proper positioning.

Compliance Device | Features and Benefits

Flexibility of the Tool:
Cylindrical Horizontal compliance devices are used for inserting components that may be misaligned with the tool. They allow a horizontal displacement that compensates for part placing inaccuracies.

For Precision Applications:
High quality components allows for centering repeatability from 0.02mm and angular repeatability from ±10°.

Harsh Environments:
Enclosed design allows them to be used in harsh environments.

Spring Assist:
Optional spring assist allows for use in single acting mode.

Mounting Information



CH Horizontal Compliance
The compliance is located using a pilot boss and a dowel pin and assembled using 4 or 6 through body screws.



Tool Mounting
Tooling is located using a centering and a dowel pin and assembled using 4 screws.

XPRESS
FAST LOCAL DELIVERY

See pages 2-5 for product availability in your region.

Dimensions and technical information are subject to change without notice

RQC/RTP SERIES

Automatic Tool Changers | Technical Information

XPRESS
FAST LOCAL DELIVERY
See pages 2-5 for product availability in your region.

RQC-200/RTP-200

Combined Weight: 3 Kg [6.7 lb]
Max. Payload: 90 Kg [200 lb]
Max. Moment: 810 Nm [7200 in-lb]

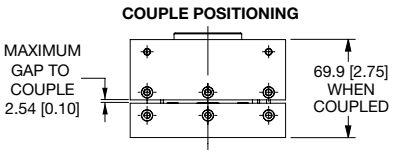

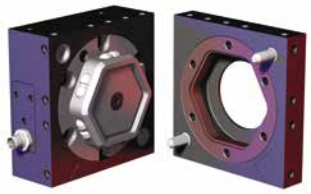

RQC-200 Robot Plate | RTP-200 Tool Plate

RQC-400/RTP-400

Combined Weight: 4.7 Kg [10.4 lb]
Max. Payload: 180 Kg [400 lb]
Max. Moment: 1580 Nm [14000 in-lb]

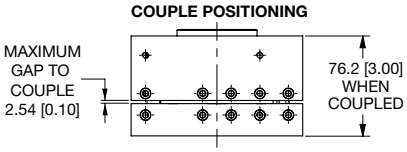

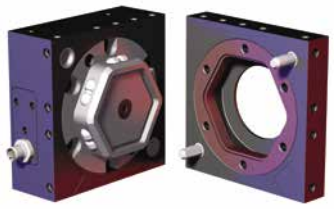

RQC-400 Robot Plate | RTP-400 Tool Plate

RQC-800/RTP-800

Combined Weight: 7.1 Kg [15.8 lb]
Max. Payload: 360 Kg [800 lb]
Max. Moment: 2490 Nm [22000 in-lb]

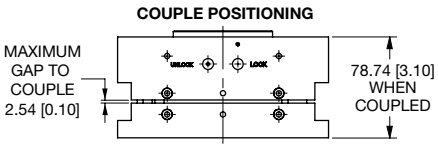

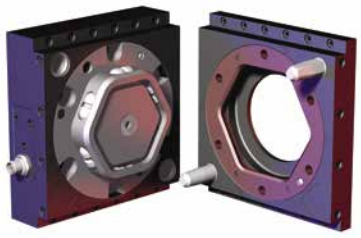

RQC-800 Robot Plate | RTP-800 Tool Plate

RQC-1200/RTP-1200

Combined Weight: 8.3 Kg [18.4 lb]
Max. Payload: 550 Kg [1200 lb]
Max. Moment: 3390 Nm [30000 in-lb]

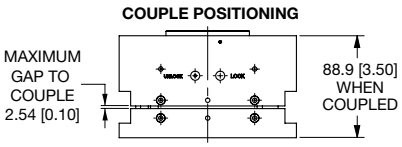

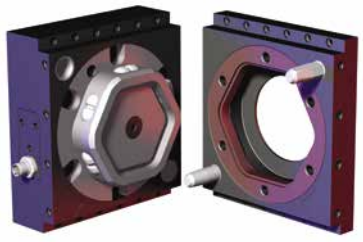

RQC-1200 Robot Plate | RTP-1200 Tool Plate

RQC-2400/RTP-2400

Combined Weight: 30 Kg [66.1 lb]
Max. Payload: 1089 Kg [2400 lb]
Max. Moment: 7000 Nm [61955 in-lb]

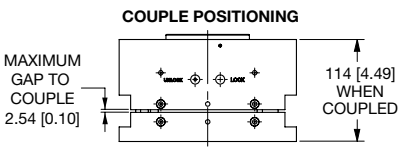

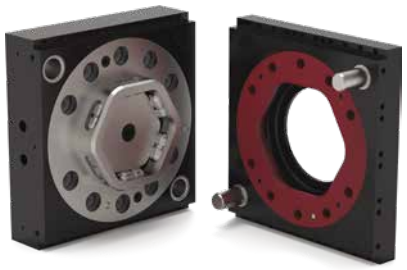

RQC-2400 Robot Plate | RTP-2400 Tool Plate

QC/TP, RHC SERIES

CLICK OR SCAN
To view full catalog pages on these product

Automatic Tool Changers | Features and Benefits

QC Series Tool Changers

XPRESS

See page 2-5 for product availability in your region.

QC-30 Robot Plate | **TP-30** Tool Plate



Combined Weight: 0.34 Kg [0.75 lbs]
Max. Payload: 13.6 Kg [30 lbs]
Max. Moment: 22.6 Nm [200 in-lbs]

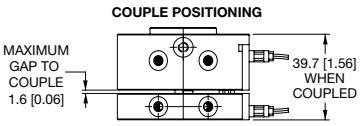

QC-60 Robot Plate | **TP-60** Tool Plate



Combined Weight: 1.27 Kg [2.8 lbs]
Max. Payload: 27 Kg [60 lbs]
Max. Moment: 88.1 Nm [780 in-lbs]

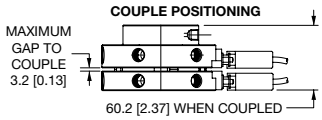

QC-60-10P Robot Plate | **TP-60-10P** Tool Plate



Combined Weight: 1.27 Kg [2.8 lbs]
Max. Payload: 27 Kg [60 lbs]
Max. Moment: 88.1 Nm [780 in-lbs]

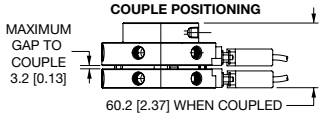

QC-150 Robot Plate | **TP-150** Tool Plate



Combined Weight: 3.2 Kg [7.1 lbs]
Max. Payload: 68 Kg [150 lbs]
Max. Moment: 215 Nm [1900 in-lbs]

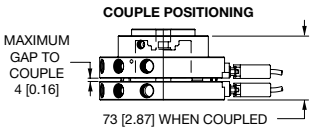

RHC Series Tool Changers

RHC-1-R Robot Plate | **RHC-1-T** Tool Plate



Combined Weight: 0.29 Kg [0.63 lbs]
Max. Payload: 9 Kg [20 lbs]
Max. Moment: 28 Nm [250 in-lbs]

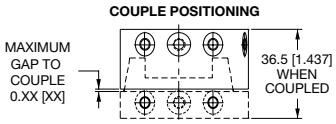

RHC-2-R Robot Plate | **RHC-2-T** Tool Plate



Combined Weight: 0.82 Kg [1.81 lbs]
Max. Payload: 59 Kg [130 lbs]
Max. Moment: 136 Nm [1200 in-lbs]

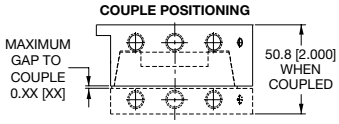

RHC-4-R Robot Plate | **RHC-3-T** Tool Plate



Combined Weight: 3.1 Kg [6.8 lbs]
Max. Payload: 136 Kg [300 lbs]
Max. Moment: 1017 Nm [9000 in-lbs]

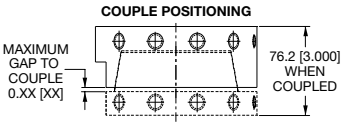

RHC-4-R Robot Plate | **RHC-4-T** Tool Plate



Combined Weight: 11 Kg [24.3 lbs]
Max. Payload: 454 Kg [1000 lbs]
Max. Moment: 2825 Nm [25000 in-lbs]

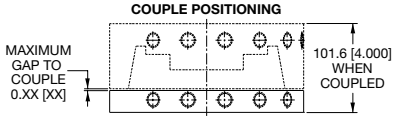

Dimensions and technical information are subject to change without notice

DESTACO offers custom and standard Docking Stations to fit customers needs. Please contact DESTACO Sales for more information.

Key Features:

- Allows for quick changing of tooling
- Reducing machine down-time
- Safely stores tooling when not in use
- Standard or custom stations

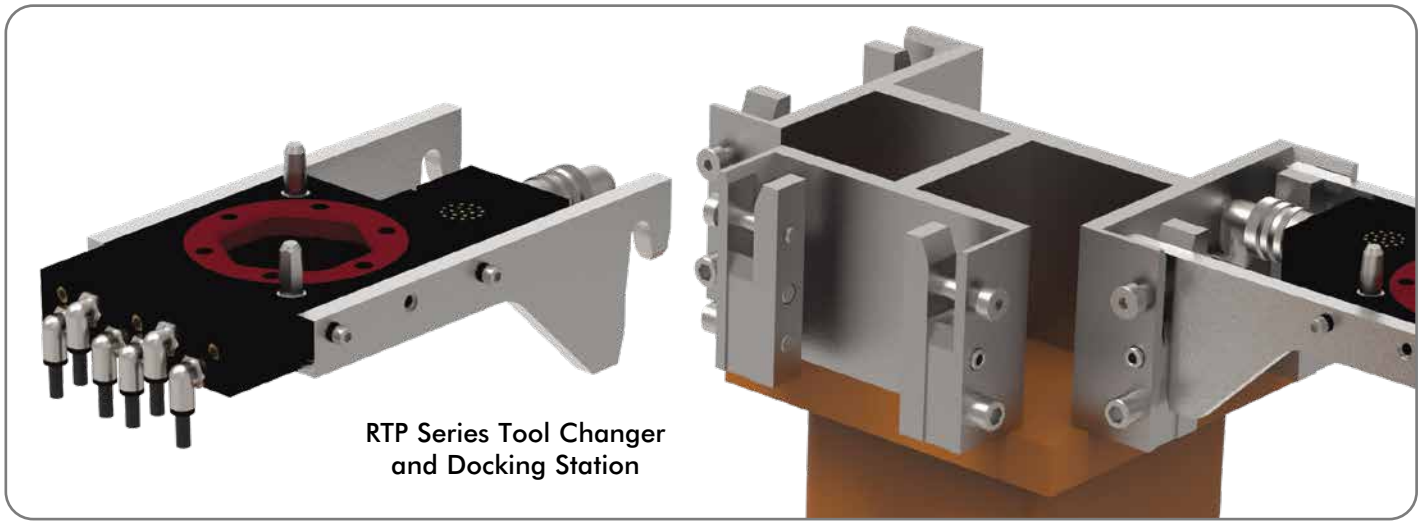

RTP Series Tool Changer and Docking Station

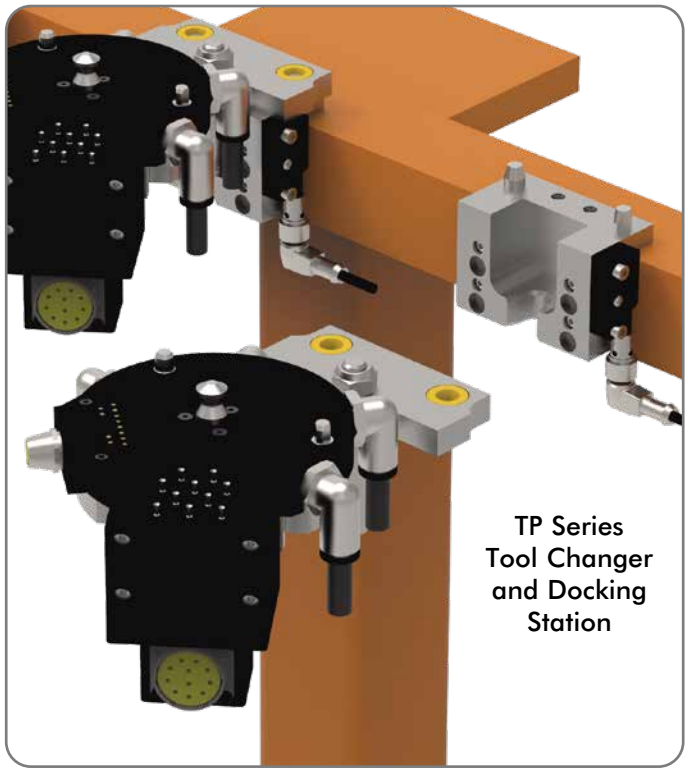

TP Series Tool Changer and Docking Station

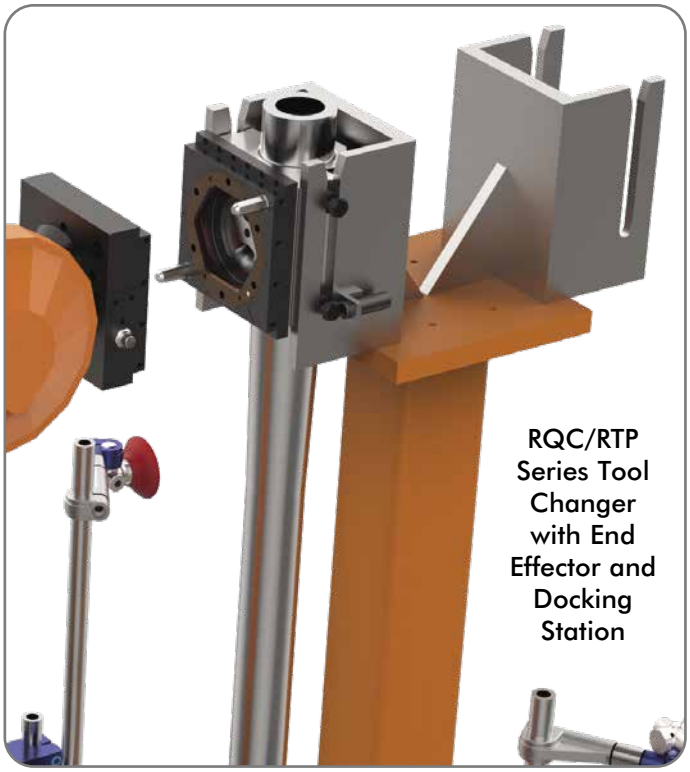

RQC/RTP Series Tool Changer with End Effector and Docking Station

MODULAR MOUNTING SOLUTIONS

Grippers/Slides/Rotaries | Product Overview

DESTACO's modular automation systems feature DIRECTCONNECT™ technology, allowing all components of the system–base slides, block thrusters, thruster slides, grippers, and mounting stanchions—to be mounted together quickly and easily without any adapter plates.

- Reduces engineering design
- Saves $$$ with modular solutions
- Change device orientations quickly
- Eliminates Adapter Plates

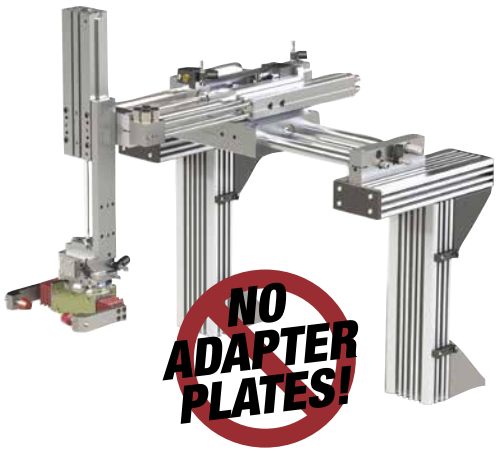

Modular DIRECTCONNECT Mounting Style Examples:

Look for more examples of each main section of the catalog. This is a sample of configurations we offer. Custom solutions also available.

Rotate & Place

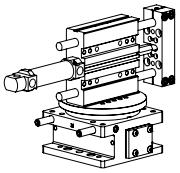

DRF Rotary Actuator to DLT Linear Slide

Pick & Place

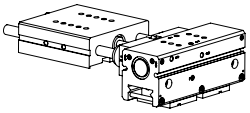

DLT Base Slide to DPP Parallel Gripper

Place & Place

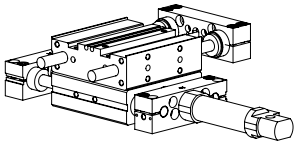

DLB Base Slide to DLT Linear Slide

Place & Place

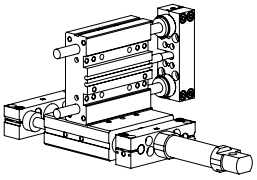

DLB Base Slide to DLT Linear Slide

Connect Different Sizes & Styles

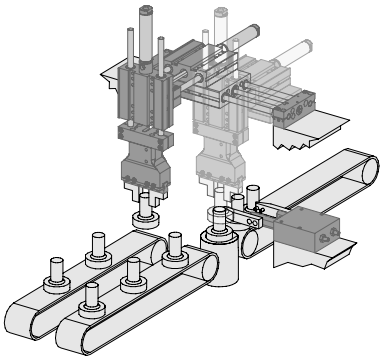

Configure in Multiple Orientations

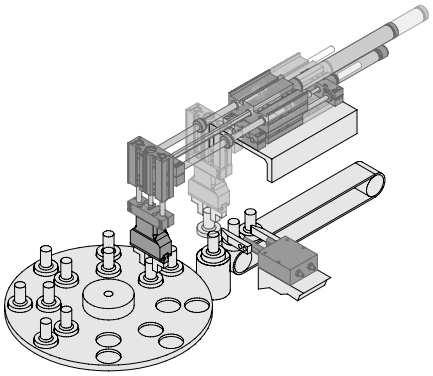

Look for the DIRECTCONNECT Logo

Product Series beginning with the letter D have a DIRECTCONNECT option, with a few exceptions.

DIRECTCONNECT™

Dimensions and technical information are subject to change without notice

HOW TO MAKE A DIRECTCONNECT™ MOUNT

The DIRECTCONNECT Modular Compatibility Chart (on the next page) shows all the products that can easily connect together without adapter plates. Simply locate your first product along the horizontal axis of the top of chart, then locate the second product along the vertical axis on the left side of the chart. If a connection can be made, a mounting pattern will be shown.

DIRECTCONNECT Modular Compatibilty Example:

Shown below, a DLB-10,12,16 Base Slide connecting to a DLT-10,12,16 Linear Thruster. Units may connect on different faces of the unit. Please refer to individual datasheets for DIRECTCONNECT mounting surfaces.

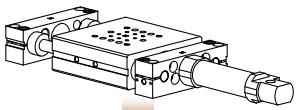

	Catalog Models	Base Slides			Thruster Slides				
		DLB-06,08	DLB-10,12,16	DLB-20,25	DLT-06,08	DLT-10,12,16	DLT-20,25	DLM-07	DLM-09,12
Base Slides	DLB-06,08				3R,3S			3R,3S	
	DLB-10,12,16				3S	5R,5S		3S	5R,5S
	DLB-20,25					5S	10R,10S		5S
Thruster Slides	DLT-06,08	3R,3S	3S		3R	3R		3R	3R
	DLT-10,12,16		5R,5S	5S		5R	5R		5R
	DLT-20,25			10R,10S			10R		
	DLM-07	3R,3S	3S		3R	3R		3R	3R
	DLM-9,12			5S		5R	5R		5R
	DRE-075,094					5R	5R		5R

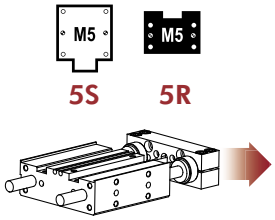

Note: The numbers in the cell represent the metric screw size and basic mounting pattern. S=Square, R=Rectangle. ie; 5S = M5 Screw with square mounting pattern.

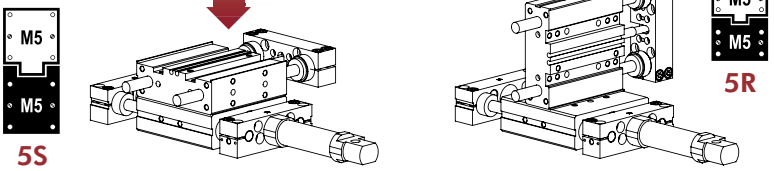

DirectConnect Mounting Surface Example:

Locate matching DIRECTCONNECT mounting pattern icons on the products dimensional drawings to determine what surface faces can be connected to. Corresponding mates equal a DIRECTCONNECT connection.

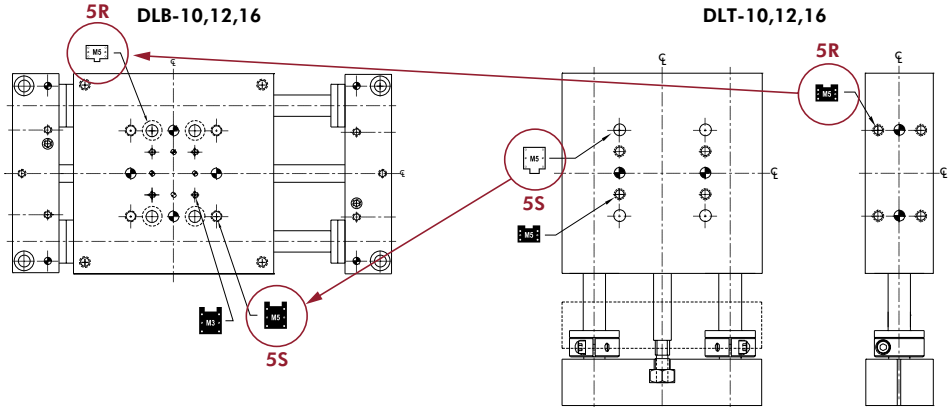

DIRECTCONNECT™ MODULAR COMPATIBILITY CHART

Grippers/Slides/Rotaries | Product Overview

DESTACO's modular automation systems feature DirectConnect™ technology, allowing all components of the system–base slides, block thrusters, thruster slides, and grippers—to be mounted together quickly & easily without any adapter plates. Look for matching icons on product datasheets for mounting compatibility.

Simply locate your first product along the horizontal axis of the top of chart, then locate the second product along the vertical axis on the left side of the chart. If a connection can be made, a mounting pattern will be shown.

Note: The numbers in the cell represent the metric screw size and basic mounting pattern. S=Square, R=Rectangle. ie; 5S = M5 Screw with square mounting pattern.

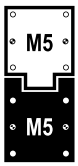

M5 (S)quare

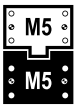

M5 (R)ectangle

Catalog Models		Base Slides		
		DLB-06&08	DLB-10,12&16	DLB-20&25
Base Slides	DLB-06 & 08			
	DLB-10, 12 & 16			
	DLB-20 & 25			
Thruster Slides	DLT-06 & 08	3R,3S	3S	
	DLT-10, 12 & 16		5R,5S	5S
	DLT-20 & 25			10R,10S
	DLM-07	3R,3S	3S	
	DLM-9 & 12		5R,5S	5S
Grippers	DGC		5R	
	DPG		5R	
	DCT-12, 16 & 25	3R		
	DCT-25		5R	
	DPDL-047 & 056	3R		
	DPDL-088 & 125		5R	
	DPDL-175 & 250			10R
	DPDS-047 & 056	3R		
	DPDS-088 & 125		5R	
	DPDS-175 & 250			10R
	DPL-25xx		5R	
	DPL-32xx & 40xx			10R
	DPP-10 &14	3R		
	DPP-20		5R	
	DPP-28		5R	10R
	DPW-250	3R		
	DPW-375 & 500		5R	
	G110-08 & 011	3R		
	G110-18 & 25		5R	
	DPE-200		5R	
	DPE-400			10R

Dimensions and technical information are subject to change without notice

DIRECTCONNECT™ MODULAR COMPATIBILITY CHART

Thruster Slides				
DLT-06&08	DLT-10,12&16	DLT-20&25	DLM-07	DLM-09&12
3R,3S			3R,3S	
3S	5R,5S		3S	5R,5S
	5S	10R,10S		5S
3R	3R		3R	3R
	5R	5R		5R
		10R		
3R	3R		3R	3R
	5R	5R		5R
	5R	5R		5R
	5R	5R		5R
3R	3R		3R	3R
	5R	5R		5R
3R	3R		3R	3R
	5R	5R		5R
		10R		
3R	3R		3R	3R
	5R	5R		5R
		10R		
	5R	5R		5R
		10R		
3R	3R		3R	3R
	5R	5R		5R
	5R	10R		5R
3R	3R		3R	3R
	5R	5R		5R
3R	3R		3R	3R
	5R	5R		5R
	5R	5R		5R
		10R		

PARALLEL GRIPPERS

Sizing and Application Chart

	Series	Page #	Jaws: 2 Jaws	Jaws: 3 Jaws	Basic Unit Dimensions mm [in]: Length	Width	Height	Stroke mm [in]: 0–6.3 [0–0.25]	6.3–12.7 [0.25–0.50]	12.7–19.1 0.50–0.75]	19.1–25.4 [0.75–1.00]	25.4–31.8 [1.00–1.25]	31.8–38.1 [1.25–1.50]	38.1–44.5 [1.50–1.75]	44.5–50.8 [1.75–2.00]	50.8–57.1 [2.00–2.25]	57.1–63.5 [2.25–2.50]	63.5–69.8 [2.50–2.75]	69.8–76.2 [2.75–3.00]	76.2+ [3.00+]
Electric Grippers		GR-EPG-#																		
	DPE-200	7	●		67.9 [2.67]	28 [1.10]	128 [5.04]	●	●	●	●										
	DPE-400	5	●		159.6 [6.28]	60 [2.36]	129.5 [5.10]	●	●	●	●										
	RPE-100	9	●		32 [1.26]	40 [1.57]	94 [3.70]	●													
Precision Grippers		GR-PRC-#																		
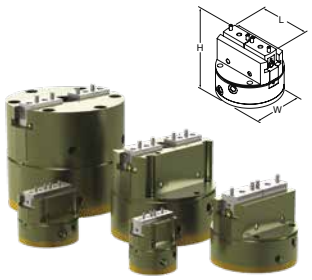	6002P	5	●		72 [2.83]	60 [2.36]	77 [3.03]	●	●												
	6002P-C	5	●		78 [3.07]	60 [2.36]	77 [3.03]	●	●	●											
	8002P	6	●		91.6 [3.61]	80 [3.15]	78 [3.07]	●	●												
	8002P-C	6	●		98.4 [3.87]	80 [3.15]	78 [3.07]	●	●	●	●										
	11002P	7	●		126 [4.96]	110 [4.33]	106 [4.17]	●	●	●	●										
	11002P-C	7	●		136 [5.35]	110 [4.33]	106 [4.17]	●	●	●	●	●									
	1400P	8	●		165 [6.50]	140 [5.51]	137 [5.39]	●	●	●	●	●									
	14002P-C	8	●		179 [7.05]	140 [5.51]	137 [5.39]	●	●	●	●	●	●	●							
	16002P	9	●		194 [7.64]	165 [6.50]	169 [6.65]	●	●	●	●	●									
	16002P-C	9	●		204 [8.03]	165 [6.50]	169 [6.65]	●	●	●	●	●	●	●	●						
	16502PGR	10	●		210 [8.27]	165 [6.50]	262 [10.31]	●	●	●	●	●									
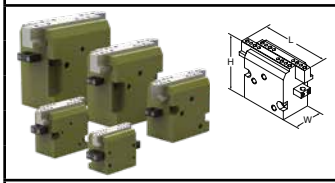	DGC-25	17	●		75 [2.95]	38 [1.50]	55 [2.17]	●	●	●	●										
	DGC-45	18	●		95 [3.74]	42 [1.65]	70 [2.76]	●	●	●	●	●									
	DGC-65	19	●		125 [4.92]	53 [2.09]	90 [3.54]	●	●	●	●	●	●	●							
	GC-85	20	●		155 [6.10]	67.5 [2.66]	120 [4.72]	●	●	●	●	●	●	●	●						
	GC-105	21	●		190 [7.48]	85.5 [3.37]	145 [5.71]	●	●	●	●	●	●	●	●	●	●				
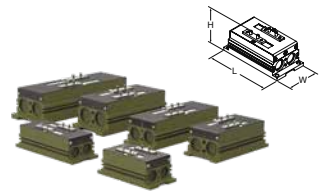	DPL-2520	25	●		152 [5.98]	75 [2.95]	65 [2.56]	●	●	●	●	●	●	●							
	DPL-2535	26	●		197 [7.76]	75 [2.95]	65 [2.56]	●	●	●	●	●	●	●	●	●	●	●			
	DPL-3230	27	●		186 [7.32]	93 [3.66]	74 [2.91]	●	●	●	●	●	●	●	●	●	●				
	DPL-3250	28	●		246 [9.69]	93 [3.66]	74 [2.91]	●	●	●	●	●	●	●	●	●	●	●	●	●	●
	DPL-4040	29	●		238 [9.37]	112 [4.41]	91 [3.58]	●	●	●	●	●	●	●	●	●	●	●	●	●	●
	DPL-4070	30	●		328 [12.91]	112 [4.41]	91 [3.58]	●	●	●	●	●	●	●	●	●	●	●	●	●	●
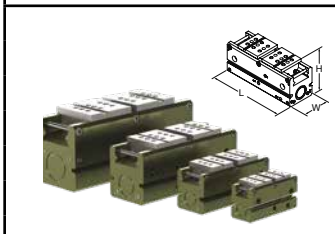	DPP-10M-06	35	●		62.9 [2.48]	25 [0.98]	34.67 [1.36]	●													
	DPP-10M-12	35	●		73.7 [2.90]	25 [0.98]	34.67 [1.36]	●	●												
	DPP-14M-15	36	●		90.2 [3.55]	34 [1.34]	42.21 [1.66]	●	●	●											
	DPP-14M-25	36	●		118.7 [4.67]	34 [1.34]	42.21 [1.66]	●	●	●	●										
	DPP-20M-25	37	●		129 [5.08]	46 [1.81]	55.63 [2.19]	●	●	●	●										
	DPP-20M-38	37	●		175.5 [6.91]	46 [1.81]	55.63 [2.19]	●	●	●	●	●	●								
	DPP-28M-31	38	●		162.3 [6.39]	58 [2.28]	72.54 [2.86]	●	●	●	●	●	●								
	DPP-28M-50	38	●		221.5 [8.72]	58 [2.28]	72.54 [2.86]	●	●	●	●	●	●	●	●	●	●				

PARALLEL GRIPPERS

Sizing and Application Chart

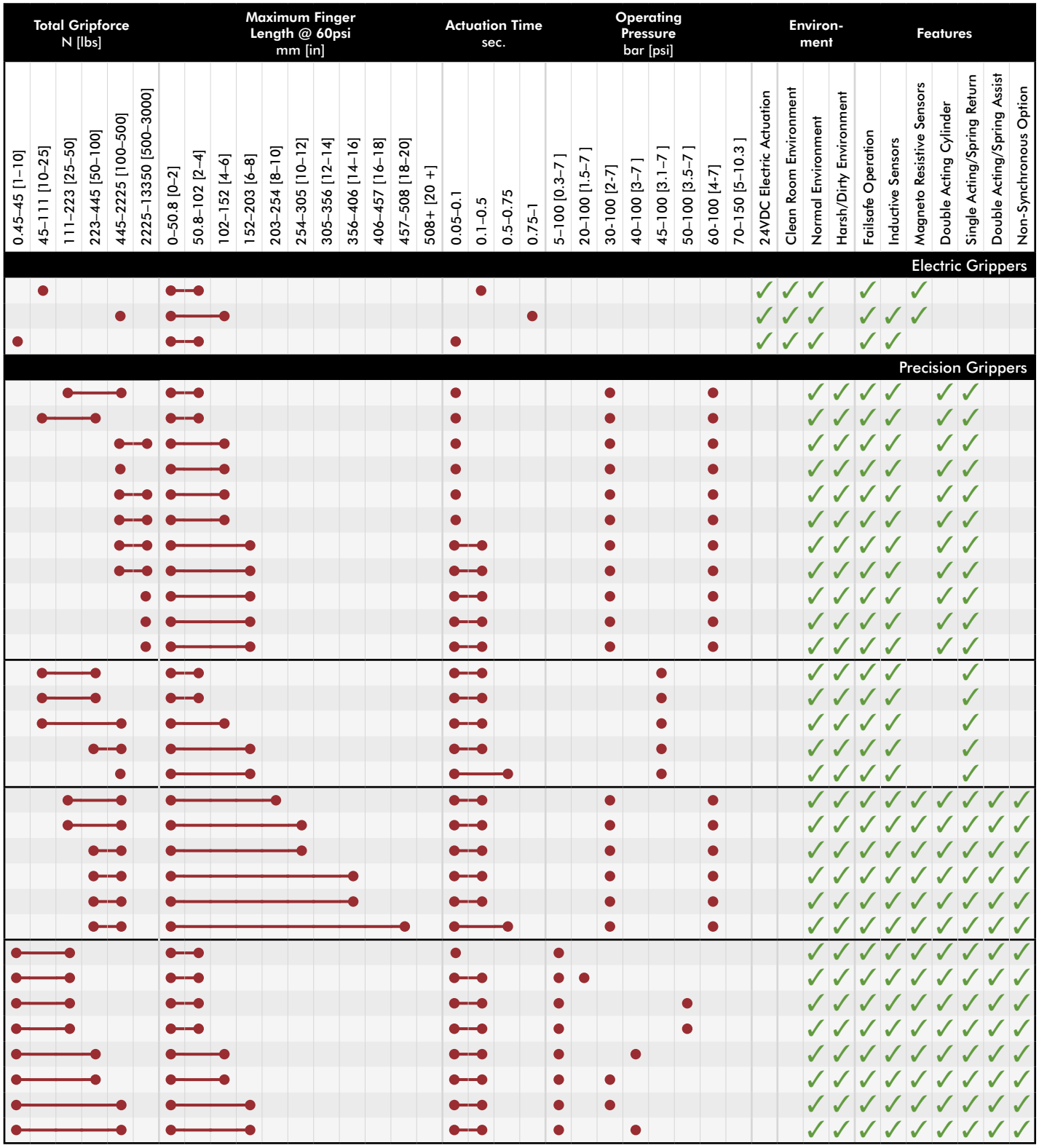

PARALLEL GRIPPERS

Sizing and Application Chart

	Series	Page #	Jaws: 2 Jaws	Jaws: 3 Jaws	Basic Unit Dimensions mm [in]: Length	Width	Height	Stroke mm [in]: 0–6.3 [0–0.25]	6.3–12.7 [0.25–0.50]	12.7–19.1 0.50–0.75]	19.1–25.4 [0.75–1.00]	25.4–31.8 [1.00–1.25]	31.8–38.1 [1.25–1.50]	38.1–44.5 [1.50–1.75]	44.5–50.8 [1.75–2.00]	50.8–57.1 [2.00–2.25]	57.1–63.5 [2.25–2.50]	63.5–69.8 [2.50–2.75]	69.8–76.2 [2.75–3.00]	76.2 + [3.00+]
Precsion Grippers (cont.)		GR-PRC-#																		
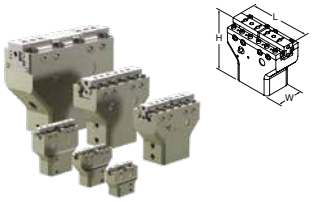	RP-50P	41	●		57 [2.24]	25.4 [1.00]	46.7 [1.84]	●	●											
	RP-100P	42	●		83 [3.27]	25.4 [1.00]	59.4 [2.34]	●	●	●	●									
	RP-25P	43	●		108 [4.25]	31.8 [1.25]	81.1 [3.19]	●	●	●	●	●								
	RP-35P	44	●		143 [5.63]	50.8 [2.00]	103.2 [4.06]	●	●	●	●									
	RP-40P	45	●		178 [7.01]	[2.25] 57.2	125 [4.92]	●	●	●	●	●	●	●	●					
	RP-43P	46	●		292 [11.50]	74.7 [2.94]	175 [6.89]	●	●	●	●	●	●	●	●	●	●	●	●	●
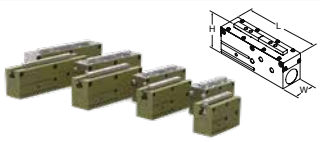	RPL/RPLC-1	49	●		44.5 [1.75]	19.1 [0.75]	29.5 [1.16]	●												
	RPL/RPLC-2	49	●		59.5 [2.34]	19.1 [0.75]	29.5 [1.16]	●	●											
	RPL/RPLC-3	50	●		80 [3.15]	22.2 [0.87]	32.6 [1.28]	●	●	●	●									
	RPL/RPLC-4	50	●		98.1 [3.86]	22.2 [0.87]	32.6 [1.28]	●	●	●	●	●								
General Industrial Grippers		GR-GEN-#																		
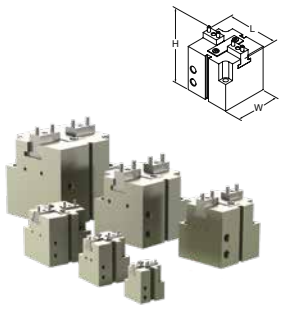	CP-1	5	●		37.6 [1.48]	30 [1.18]	39.2 [1.54]	●												
	CP-1-C	5	●		42 [1.65]	30 [1.18]	39.2 [1.54]	●												
	CP-2	6	●		51.4 [2.02]	40 [1.57]	51.5 [2.03]	●												
	CP-2-C	6	●		58.2 [2.29]	40 [1.57]	51.5 [2.03]	●	●											
	CP-3	7	●		70 [2.76]	55 [2.17]	67 [2.64]	●	●											
	CP-3-C	7	●		81.2 [3.20]	55 [2.17]	67 [2.64]	●	●	●										
	CP-4	8	●		85 [3.35]	65 [2.56]	74 [2.91]	●	●	●										
	CP-4-C	8	●		96 [3.78]	65 [2.56]	74 [2.91]	●	●	●	●									
	CP-5	9	●		102 [4.02]	80 [3.15]	91 [3.58]	●	●	●	●									
	CP-5-C	9	●		120 [4.72]	80 [3.15]	91 [3.58]	●	●	●	●	●								
	CP-6	10	●		125 [4.92]	100 [3.94]	114 [4.49]	●	●	●	●									
	CP-6-C	10	●		141 [5.55]	100 [3.94]	114 [4.49]	●	●	●	●	●								
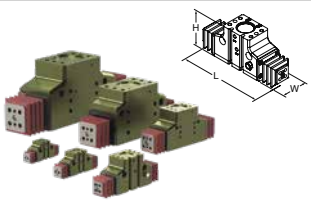	DPDL-047	13	●		54.5 [2.16]	22.2 [.875]	32.2 [1.27]	●	●											
	DPDL-056	14	●		68.7 [2.70]	24.1 [.950]	37.7 [1.48]	●	●											
	DPDL-088	15	●		101.1 [3.98]	36.1 [1.420]	56 [2.20]	●	●	●										
	DPDL-125	16	●		128.4 [5.06]	43.2 [1.700]	68.5 [2.70]	●	●	●	●									
	DPDL-175	17	●		183.1 [7.21]	64.8 [2.550]	100.2 [3.94]	●	●	●	●	●								
	DPDL-250	18	●		243.8 [9.58]	79.3 [3.125]	123.3 [4.85]	●	●	●	●	●	●	●	●					
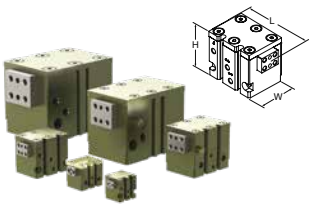	DPDS-047	21	●		31.2 [1.23]	22.2 [0.87]	25.9 [1.02]	●												
	DPDS-056	22	●		39.8 [1.57]	24.1 [0.95]	28.9 [1.14]	●												
	DPDS-088	23	●		57.4 [2.26]	36.1 [1.42]	43.4 [1.71]	●												
	DPDS-125	24	●		73.5 [2.89]	43.2 [1.70]	52.7 [2.07]	●	●											
	DPDS-175	25	●		114.7 [4.52]	64.8 [2.55]	80.4 [3.17]	●	●											
	DPDS-250	26	●		133.1 [5.24]	79.3 [3.12]	95.5 [3.76]	●	●	●										
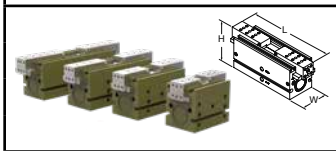	DPG-10M-1	29	●		62 [2.44]	34.9 [1.37]	44.9 [1.77]	●												
	DPG-10M-2	29	●		86 [3.39]	34.9 [1.37]	44.9 [1.77]	●	●											
	DPG-10M-3	29	●		113 [4.45]	34.9 [1.37]	44.9 [1.77]	●	●	●										
	DPG-10M-4	29	●		137 [5.39]	34.9 [1.37]	44.9 [1.77]	●	●	●	●									

Dimensions and technical information are subject to change without notice

PARALLEL GRIPPERS

Sizing and Application Chart

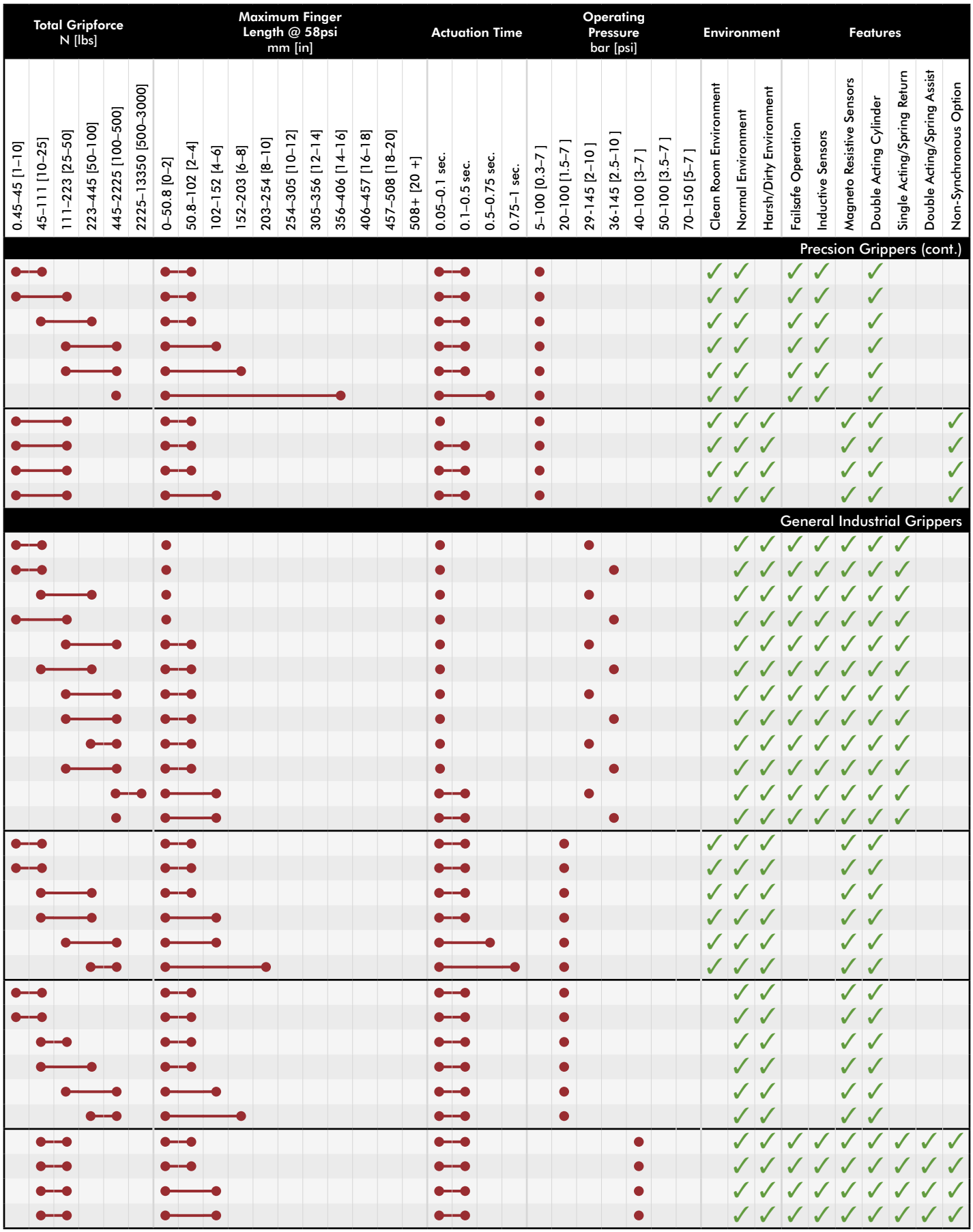

PARALLEL GRIPPERS

Sizing and Application Chart

	Series	Page #	Jaws: 2 Jaws	Jaws: 3 Jaws	Basic Unit Dimensions mm [in]: Length	Width	Height	Stroke mm [in]: 0–6.3 [0–0.25]	6.3–12.7 [0.25–0.50]	12.7–19.1 0.50–0.75]	19.1–25.4 [0.75–1.00]	25.4–31.8 [1.00–1.25]	31.8–38.1 [1.25–1.50]	38.1–44.5 [1.50–1.75]	44.5–50.8 [1.75–2.00]	50.8–57.1 [2.00–2.25]	57.1–63.5 [2.25–2.50]	63.5–69.8 [2.50–2.75]	69.8–76.2 [2.75–3.00]	76.2+ [3.00+]
General Industrial Grippers (cont.)		GR-GEN-#																		
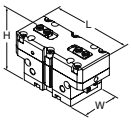	RDH-1	33	●		63 [2.48]	33 [1.30]	38.5 [1.52]	●													
	RDH-1-L	33	●		63 [2.48]	33 [1.30]	38.5 [1.52]	●	●	●											
	RDH-2	34	●		83 [3.27]	40 [1.57]	58 [2.28]	●													
	RDH-2-L	34	●		83 [3.27]	40 [1.57]	58 [2.28]	●	●	●											
	RDH-3	35	●		104 [4.09]	50 [1.97]	66 [2.60]	●	●	●											
	RDH-3-L	35	●		104 [4.09]	50 [1.97]	66 [2.60]	●	●	●	●	●									
	RDH-4	36	●		129 [5.08]	60 [2.36]	74.5 [2.93]	●	●	●											
	RDH-4-L	36	●		129 [5.08]	60 [2.36]	74.5 [2.93]	●	●	●	●	●	●								
	RDH-5	37	●		162 [6.38]	76 [2.99]	90.5 [3.56]	●	●	●	●	●									
	RDH-5-L	37	●		162 [6.38]	76 [2.99]	90.5 [3.56]	●	●	●	●	●	●	●	●						
	RDH-6	38	●		205 [8.07]	100 [3.94]	113 [4.45]	●	●	●	●	●									
	RDH-6-L	38	●		205 [8.07]	100 [3.94]	113 [4.45]	●	●	●	●	●	●	●	●						
	RDH-7	39	●		258 [10.16]	120 [4.72]	147 [5.79]	●	●	●	●	●	●	●	●						
	RDH-7-L	39	●		258 [10.16]	120 [4.72]	147 [5.79]	●	●	●	●	●	●	●	●	●	●	●	●		
	RDH-8	40	●		355 [13.98]	180 [7.09]	201 [7.91]	●	●	●	●	●	●	●	●	●	●	●	●	●	
	RDH-8-L	40	●		355 [13.98]	180 [7.09]	201 [7.91]	●	●	●	●	●	●	●	●	●	●	●	●	●	●
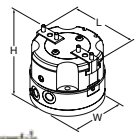	REP-62	43	●		70 [2.76]	60 [2.36]	72 [2.83]	●	●	●											
	REP-62-C	43	●		82 [3.23]	60 [2.36]	72 [2.83]	●	●	●	●	●									
	REP-82	44	●		94 [3.70]	80 [3.15]	74 [2.91]	●	●	●											
	REP-82-C	44	●		108 [4.25]	80 [3.15]	74 [2.91]	●	●	●	●	●									
	REP-112	45	●		138 [5.43]	110 [4.33]	98 [3.86]	●	●	●	●	●									
	REP-112-C	45	●		158 [6.22]	110 [4.33]	98 [3.86]	●	●	●	●	●	●								
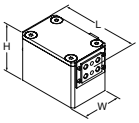	RP-5	49	●		29 [1.14]	25.4 [1.00]	36.5 [1.44]	●													
	RP-10	50	●		38.1 [1.50]	31.7 [1.25]	37.3 [1.47]	●													
	RP-11	53	●		48 [1.89]	31.8 [1.25]	28.6 [1.13]	●													
	RP-11-D	53	●		45 [1.77]	31.8 [1.25]	28.6 [1.13]	●													
	RP-12	54	●		63 [2.48]	31.8 [1.25]	35.6 [1.40]	●	●	●											
	RP-12-D	54	●		60 [2.36]	31.8 [1.25]	35.6 [1.40]	●													
	RP-15	55	●		81 [3.19]	41.3 [1.63]	47.3 [1.86]	●	●	●											
	RP-15-D	55	●		76 [2.99]	41.3 [1.63]	47.3 [1.86]	●	●	●											
	RP-17	56	●		108 [4.25]	54 [2.13]	61.9 [2.44]	●	●	●	●	●									
	RP-17-D	56	●		117 [4.61]	54 [2.13]	61.9 [2.44]	●	●	●	●	●	●	●	●						
	RP-18	57	●		177 [6.97]	74.9 [2.95]	92.8 [3.65]	●	●	●	●	●	●	●	●						
	RP-18-D	57	●		190 [7.48]	74.9 [2.95]	92.8 [3.65]	●	●	●	●	●	●	●	●	●	●	●			
	RP-19	58	●		266 [10.47]	100.3 [3.95]	118.7 [4.67]	●	●	●	●	●	●	●	●	●	●	●	●		
	RP-19-D	58	●		254 [10.00]	100.3 [3.95]	118.7 [4.67]	●	●	●	●	●	●	●	●	●	●	●			

Dimensions and technical information are subject to change without notice

PARALLEL GRIPPERS

Sizing and Application Chart

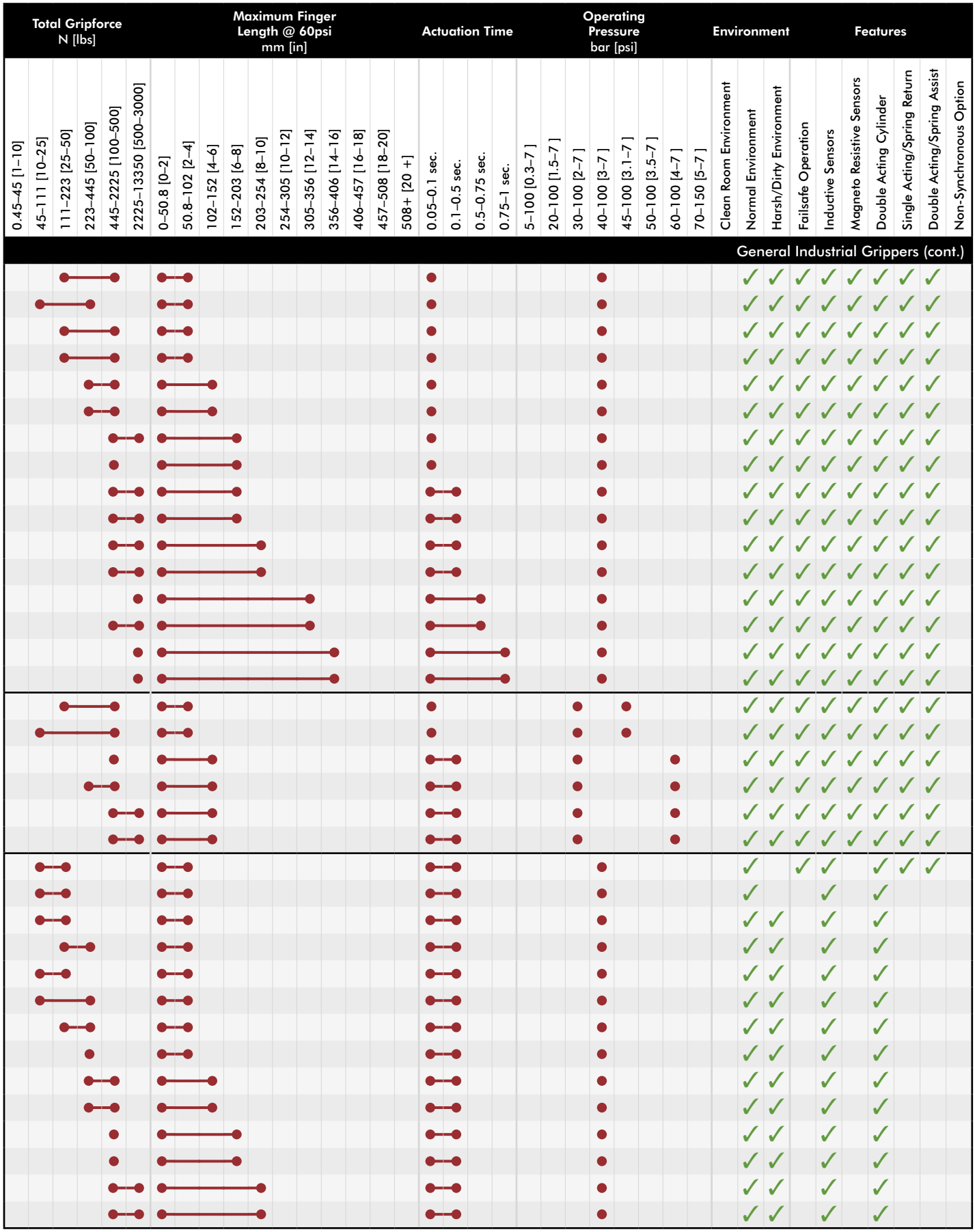

PARALLEL GRIPPERS

Sizing and Application Chart

Series	Page #	Jaws: 2 Jaws	Jaws: 3 Jaws	Basic Unit Dimensions mm [in]: Length	Width	Height	Stroke mm [in]: 0–6.3 [0–0.25]	6.3–12.7 [0.25–0.50]	12.7–19.1 0.50–0.75]	19.1–25.4 [0.75–1.00]	25.4–31.8 [1.00–1.25]	31.8–38.1 [1.25–1.50]	38.1–44.5 [1.50–1.75]	44.5–50.8 [1.75–2.00]	50.8–57.1 [2.00–2.25]	57.1–63.5 [2.25–2.50]	63.5–69.8 [2.50–2.75]	69.8–76.2 [2.75–3.00]	76.2+ [3.00+]
General Industrial Grippers (cont.)	GR-GEN-#																		
																			
RPM/RPMC-1	61	●		23 [0.91]	16 [0.63]	24 [0.94]	●												
RPM/RPMC-2	61	●		24 [0.94]	16 [0.63]	25.5 [1.00]	●												
RPM/RPMC-3	62	●		30 [1.18]	16 [0.63]	25.5 [1.00]	●												
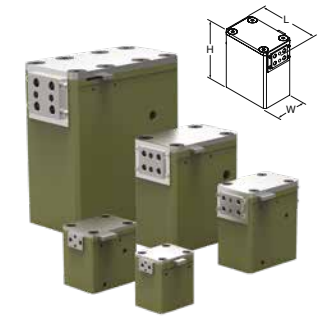																			
RPS-11	65	●		48 [1.88]	31.8 [1.25]	44.1 [1.74]	●												
RPS-11-D	65	●		45 [1.79]	31.8 [1.25]	44.1 [1.74]	●												
RPS-12	66	●		63 [2.50]	31.8 [1.25]	51.2 [2.02]	●	●											
RPS-12-D	66	●		60 [2.37]	31.8 [1.25]	51.2 [2.02]	●												
RPS-15	67	●		81 [3.19]	41.3 [1.63]	71.6 [2.82]	●	●											
RPS-15-D	67	●		76 [3.00]	41.3 [1.63]	71.6 [2.82]	●	●											
RPS-17	68	●		107 [4.25]	54.0 [2.13]	98.7 [3.89]	●	●	●	●									
RPS-17-D	68	●		117 [4.60]	54.0 [2.13]	98.7 [3.89]	●	●	●	●	●	●							
RPS-18	69	●		177 [7.00]	74.9 [2.95]	154.4 [6.08]	●	●	●	●	●	●							
RPS-18-D	69	●		190 [7.45]	74.9 [2.95]	154.4 [6.08]	●	●	●	●	●	●	●	●	●	●			
Heavy-Duty Grippers	GR-HDP#																		
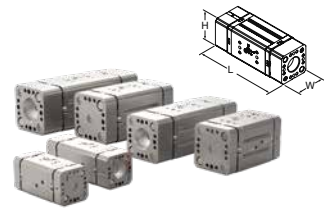																			
DPW-250-1	5	●		98 [3.86]	37.6 [1.48]	37.6 [1.48]	●	●	●										
DPW-250-2	5	●		136 [5.35]	37.6 [1.48]	37.6 [1.48]	●	●	●	●									
DPW-375-1	6	●		122 [4.80]	54 [2.13]	54 [2.13]	●	●	●	●									
DPW-375-2	6	●		198 [7.80]	54 [2.13]	54 [2.13]	●	●	●	●	●	●	●	●					
DPW-500-1	7	●		164 [6.46]	63 [2.48]	63 [2.48]	●	●	●	●	●	●							
DPW-500-2	7	●		240 [9.45]	63 [2.48]	63 [2.48]	●	●	●	●	●	●	●	●	●	●			
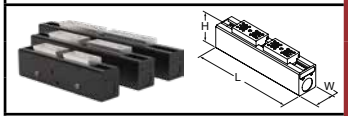																			
RPB-24	11	●		438.2 [17.25]	88.9 [3.50]	129 [5.08]	●	●	●	●	●	●	●	●	●	●	●	●	●
RPB-26	11	●		590.5 [23.25]	88.9 [3.50]	129 [5.08]	●	●	●	●	●	●	●	●	●	●	●	●	●
RPB-28	11	●		734 [28.90]	88.9 [3.50]	129 [5.08]	●	●	●	●	●	●	●	●	●	●	●	●	●
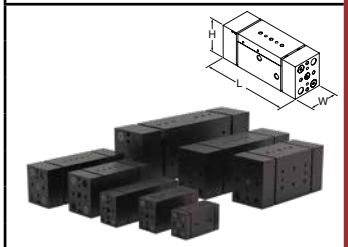																			
RPW-250	15	●		93 [3.66]	31.5 [1.24]	40.9 [1.61]	●	●	●										
RPW-375-1	16	●		120 [4.72]	37.8 [1.49]	50.5 [1.99]	●	●	●	●									
RPW-375-2	16	●		187 [7.36]	37.8 [1.49]	50.5 [1.99]	●	●	●	●	●	●	●	●					
RPW-500-1	17	●		171 [6.73]	56.9 [2.24]	66.4 [2.61]	●	●	●	●	●	●							
RPW-500-2	17	●		234 [9.21]	56.9 [2.24]	66.4 [2.61]	●	●	●	●	●	●	●	●	●	●			
RPW-625-1	18	●		219 [8.62]	66.4 [2.61]	82.3 [3.24]	●	●	●	●	●	●	●	●	●	●			
RPW-625-2	18	●		321 [12.64]	66.4 [2.61]	82.3 [3.24]	●	●	●	●	●	●	●	●	●	●	●	●	●
RPW-750	19	●		410 [16.14]	75 [2.95]	99.8 [3.93]	●	●	●	●	●	●	●	●	●	●	●	●	●
OEM Grippers	GR-OEM#																		
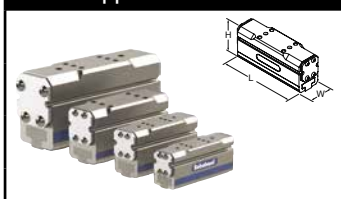																			
G110-08M	7	●		[1.69–4.06] 43–103	20 [0.79]	28 [1.10]	●	●	●	●									
G110-11M	9	●		[1.69–4.06] 43–103	24 [0.94]	36.5 [1.44]	●	●	●	●									
G110-18M	11	●		[2.13–4.92] 54–125	30 [1.18]	43 [1.69]	●	●	●	●	●	●							
G110-25M	13	●		[2.87–7.60] 73–193	40 [1.57]	61 [2.40]			●	●	●	●	●	●	●	●			

PARALLEL GRIPPERS

Sizing and Application Chart

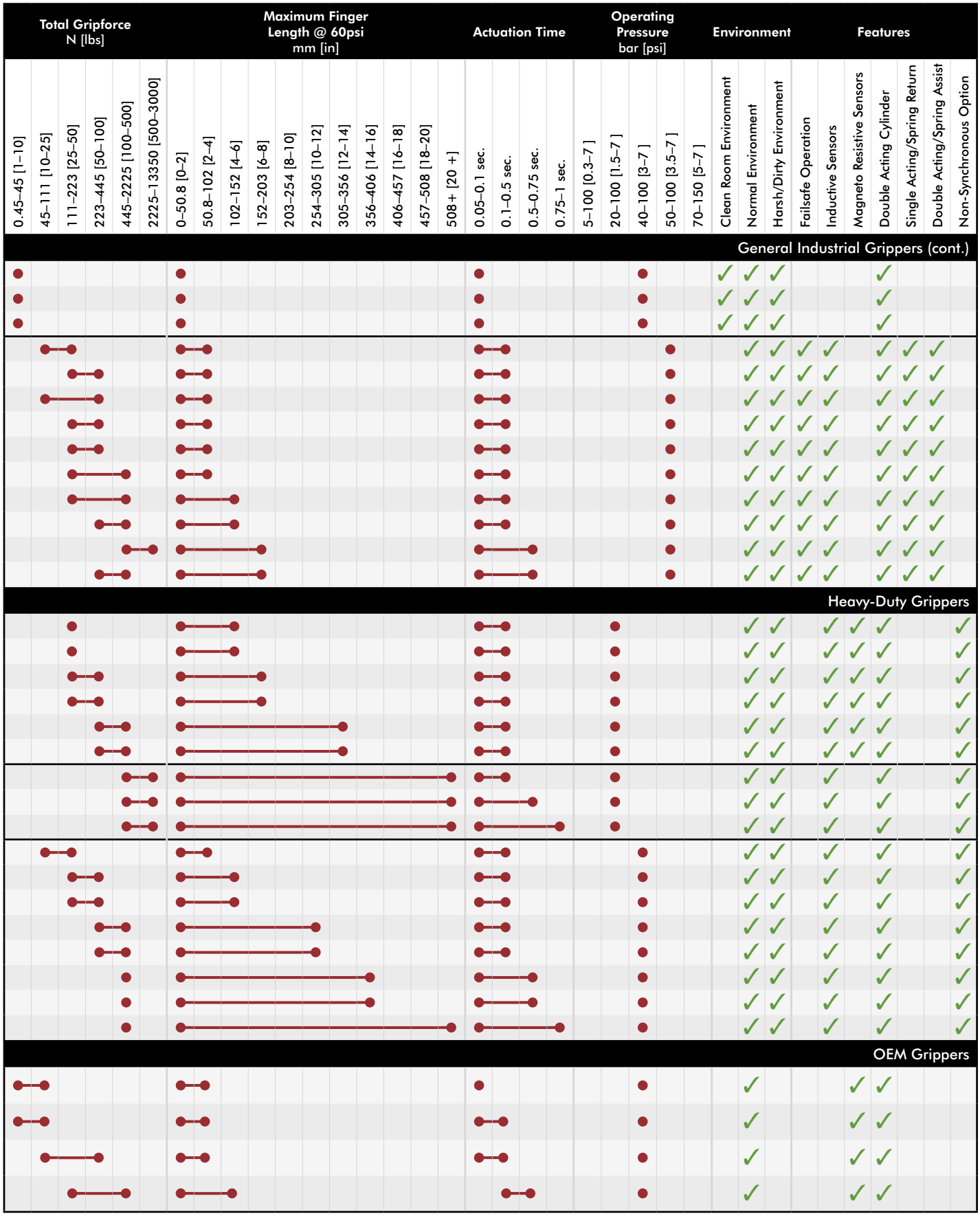

PARALLEL GRIPPERS

Sizing and Application Chart

	Series	Page #	Jaws: 2 Jaws	Jaws: 3 Jaws	Basic Unit Dimensions mm [in]: Diameter	Basic Unit Dimensions mm [in]: Height	Stroke mm [in]: 0–6.3 [0–0.25]	6.3–12.7 [0.25–0.50]	12.7–19.1 0.50–0.75]	19.1–25.4 [0.75–1.00]	25.4–31.8 [1.00–1.25]	31.8–38.1 [1.25–1.50]	38.1–44.5 [1.50–1.75]	44.5–50.8 [1.75–2.00]	50.8–57.1 [2.00–2.25]	57.1–63.5 [2.25–2.50]	63.5–69.8 [2.50–2.75]	69.8–76.2 [2.75–3.00]	76.2+ [3.00+]
Three Jaw Grippers		GR-3JP-#																	
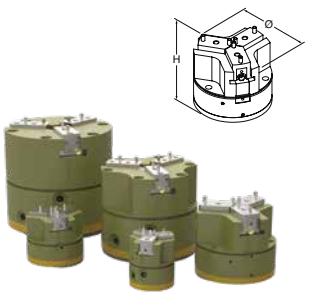	6003P	5		●	72 [2.83]	77 [3.03]	●	●											
	6003P-C	5		●	78 [3.07]	77 [3.03]	●	●	●										
	8003P	6		●	91.6 [3.61]	78 [3.07]	●	●	●										
	8003P-C	6		●	98.4 [3.87]	78 [3.07]	●	●	●	●									
	11003P	7		●	126 [4.96]	106 [4.17]	●	●	●	●									
	11003P-C	7		●	136 [5.35]	106 [4.17]	●	●	●	●	●								
	14003P	8		●	165 [6.50]	137 [5.39]	●	●	●	●	●								
	14003P-C	8		●	179 [7.05]	137 [5.39]	●	●	●	●	●	●	●						
	16503P	9		●	194 [7.64]	169 [6.65]	●	●	●	●	●	●	●						
	16503P-C	9		●	204 [8.03]	169 [6.65]	●	●	●	●	●	●	●	●					
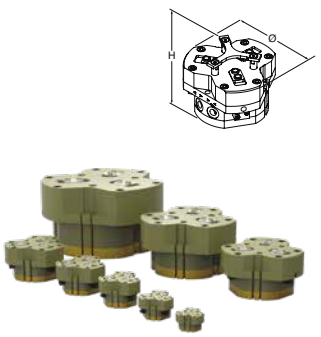	RTH-1M	17		●	63 [2.48]	43 [1.69]	●												
	RTH-1M-L	17		●	63 [2.48]	43 [1.69]	●	●											
	RTH-2M	18		●	83 [3.27]	57 [2.24]	●												
	RTH-2M-L	18		●	83 [3.27]	57 [2.24]	●	●											
	RTH-3M	19		●	83 [3.27]	57 [2.24]	●	●											
	RTH-3M-L	19		●	83 [3.27]	57 [2.24]	●	●	●										
	RTH-4M	20		●	129 [5.08]	84.5 [3.48]	●	●											
	RTH-4M-L	20		●	129 [5.08]	84.5 [3.48]	●	●	●	●									
	RTH-5M	21		●	162 [6.38]	98.5 [3.84]	●	●	●										
	RTH-5M-L	21		●	162 [6.38]	98.5 [3.84]	●	●	●	●	●								
	RTH-6M	22		●	205 [8.07]	121 [4.76]	●	●	●										
	RTH-6M-L	22		●	205 [8.07]	121 [4.76]	●	●	●	●	●								
	RTH-7M	23		●	258 [10.16]	155 [6.10]	●	●	●	●									
	RTH-7M-L	23		●	258 [10.16]	155 [6.10]	●	●	●	●	●	●	●	●					
	RTH-8M	24		●	355 [13.98]	209 [8.23]	●	●	●	●	●	●	●						
	RTH-8M-L	24		●	355 [13.98]	209 [8.23]	●	●	●	●	●	●	●	●	●	●	●	●	●
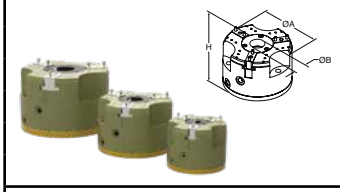	PPC-12	27		●	43 [1.69]	74 [2.91]	●	●											
	PPC-12-C	27		●	49.03 [1.93]	78 [3.07]	●	●	●										
	PPC-25	28		●	61.5 [2.42]	87 [3.43]	●	●											
	PPC-25-C	28		●	68.5 [2.70]	92 [3.62]	●	●	●	●									
	PPC-34	29		●	82.5 [3.25]	112 [4.41]	●	●	●	●									
	PPC-34-C	29		●	92.5 [3.64]	117 [4.61]	●	●	●	●	●								
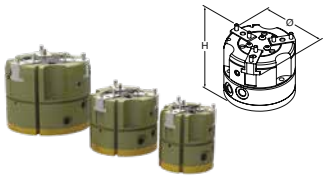	REP-63	33		●	72 [2.83]	77 [3.03]	●	●											
	REP-63-C	33		●	78 [3.07]	77 [3.03]	●	●	●										
	REP-83	34		●	91.6 [3.61]	78 [3.07]	●	●											
	REP-83-C	34		●	98.4 [3.87]	78 [3.07]	●	●	●	●									
	REP-113	35		●	126 [4.96]	103 [4.06]	●	●	●	●									
	REP-113-C	35		●	136 [5.35]	103 [4.06]	●	●	●	●	●								
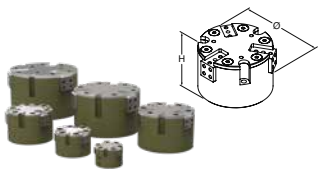	RPC-315	39		●	62 [2.44]	41 [1.61]	●	●											
	RPC-320	40		●	82 [3.23]	50 [1.97]	●	●											
	RPC-331	41		●	118 [4.65]	75.1 [2.96]	●	●	●										
	RPC-344	42		●	140 [5.51]	82.2 [3.24]	●	●	●	●									
	RPC-356	43		●	180 [7.24]	101.1 [3.98]	●	●	●	●	●								
	RPC-368	44		●	206 [8.11]	118 [4.65]	●	●	●	●	●								

Dimensions and technical information are subject to change without notice

PARALLEL GRIPPERS

Sizing and Application Chart

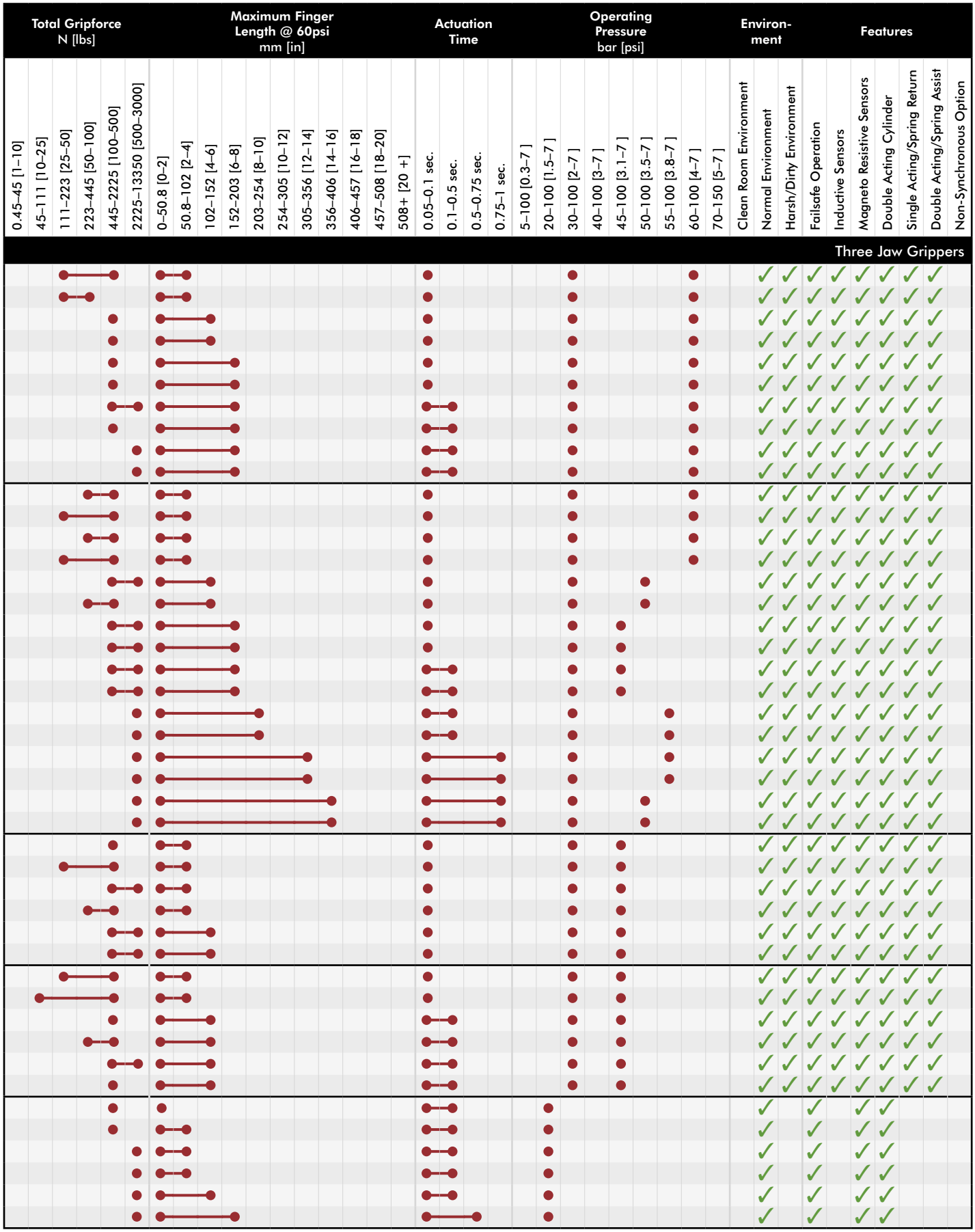

ANGULAR GRIPPERS

Sizing and Application Chart

			Jaws		Basic Unit Dimensions mm [in]			Angle (Both Jaws)				Total Gripforce N [lbs]					
	Series	Page #	2 Jaws	3 Jaws	Length	Width	Height	12 Degrees	30 Degrees	70 Degrees	180 Degrees	0.45–45 [1–10]	45–111 [10–25]	111–223 [25–50]	223–445 [50–100]	445–2225 [100–500]	2225–13350 [500–3000]
Angular Grippers		**GR-ANG-#**															
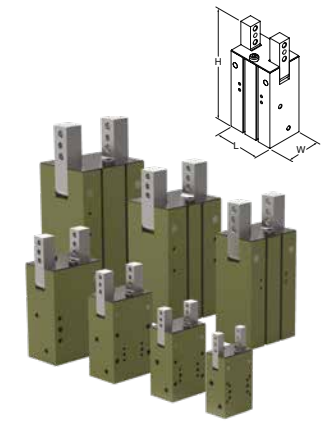	CT-12M	5	●		30 [1.18]	20 [0.79]	48 [1.89]				●	●					
	CT-12M-RE	5	●		30 [1.18]	20 [0.79]	64 [2.52]				●	●					
	CT-16M	6	●		36 [1.42]	25 [0.98]	64 [2.52]				●	●	●				
	CT-16M-RE	6	●		36 [1.42]	25 [0.98]	71 [2.80]				●	●	●				
	CT-20M	7	●		42 [1.65]	30 [1.18]	79 [3.11]				●		●				
	CT-20M-RE	7	●		42 [1.65]	30 [1.18]	83 [3.27]				●	●	●	●			
	CT-25M	8	●		50 [1.97]	36 [1.42]	93.5 [3.68]				●		●	●			
	CT-25M-RE	8	●		50 [1.97]	36 [1.42]	102 [4.02]				●	●	●	●			
	CT-32M	9	●		56 [2.20]	42 [1.65]	95 [3.74]				●		●	●	●		
	CT-32M-RE	9	●		56 [2.20]	42 [1.65]	116 [4.57]				●		●	●	●		
	CT-40M	10	●		66 [2.60]	52 [2.05]	107.5 [4.23]				●			●	●		
	CT-40M-RE	10	●		66 [2.60]	52 [2.05]	135 [5.31]				●			●	●	●	
	CT-50M	11	●		76 [2.99]	62 [2.44]	146 [5.75]				●			●	●	●	
	CT-50M-RE	11	●		76 [2.99]	62 [2.44]	163 [6.42]				●			●	●	●	
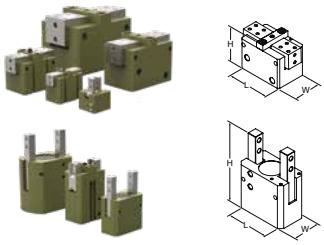	RA-5	15	●		25.4 [1.00]	38.1 [1.50]	35.0 [1.38]		●			●	●				
	RA-6	16	●		38.1 [1.50]	50.8 [2.00]	49.6 [1.95]		●				●	●			
	RA-7	17	●		50.8 [2.00]	76.2 [3.00]	60.8 [2.39]		●					●	●		
	RA-8	18	●		76.2 [3.00]	101.6 [4.00]	76.2 [3.00]		●						●	●	
	RA-10	19	●		25.4 [1.00]	25.4 [1.00]	20.7 [0.81]		●			●	●				
	RA-15	23	●		25.4 [1.00]	44.5 [1.75]	38.9 [1.53]	●					●	●			
	RA-25	24	●		44.5 [1.75]	63.5 [2.50]	61.9 [2.44]	●							●	●	
	RA-90	25	●		39 [1.54]	28 [1.10]	67.3 [2.65]				●			●	●		
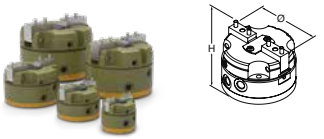	RUA-62M	29	●		Ø60 [Ø2.36]		53 [2.09]		●					●			
	RUA-82M	30	●		Ø80 [Ø3.15]		57 [2.24]		●						●		
	RUA-112M	31	●		Ø110 [Ø4.33]		175 [6.89]		●						●		
	RUA-142M	32	●		Ø140 [Ø5.51]		107 [4.21]		●							●	
	RUA-162M	33	●		Ø165 [Ø6.50]		119 [4.69]		●							●	
		GR-SPC-#															
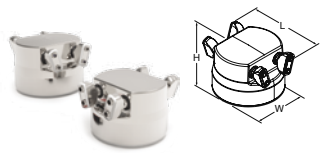	FUA-50M	2	●		85 [3.35]	75 [2.95]	52 [2.05]			●		See Datasheet					
	FUA-63M	3	●		100 [3.90]	90 [3.54]	62 [2.44]			●		See Datasheet					

Dimensions and technical information are subject to change without notice

ANGULAR GRIPPERS

Sizing and Application Chart

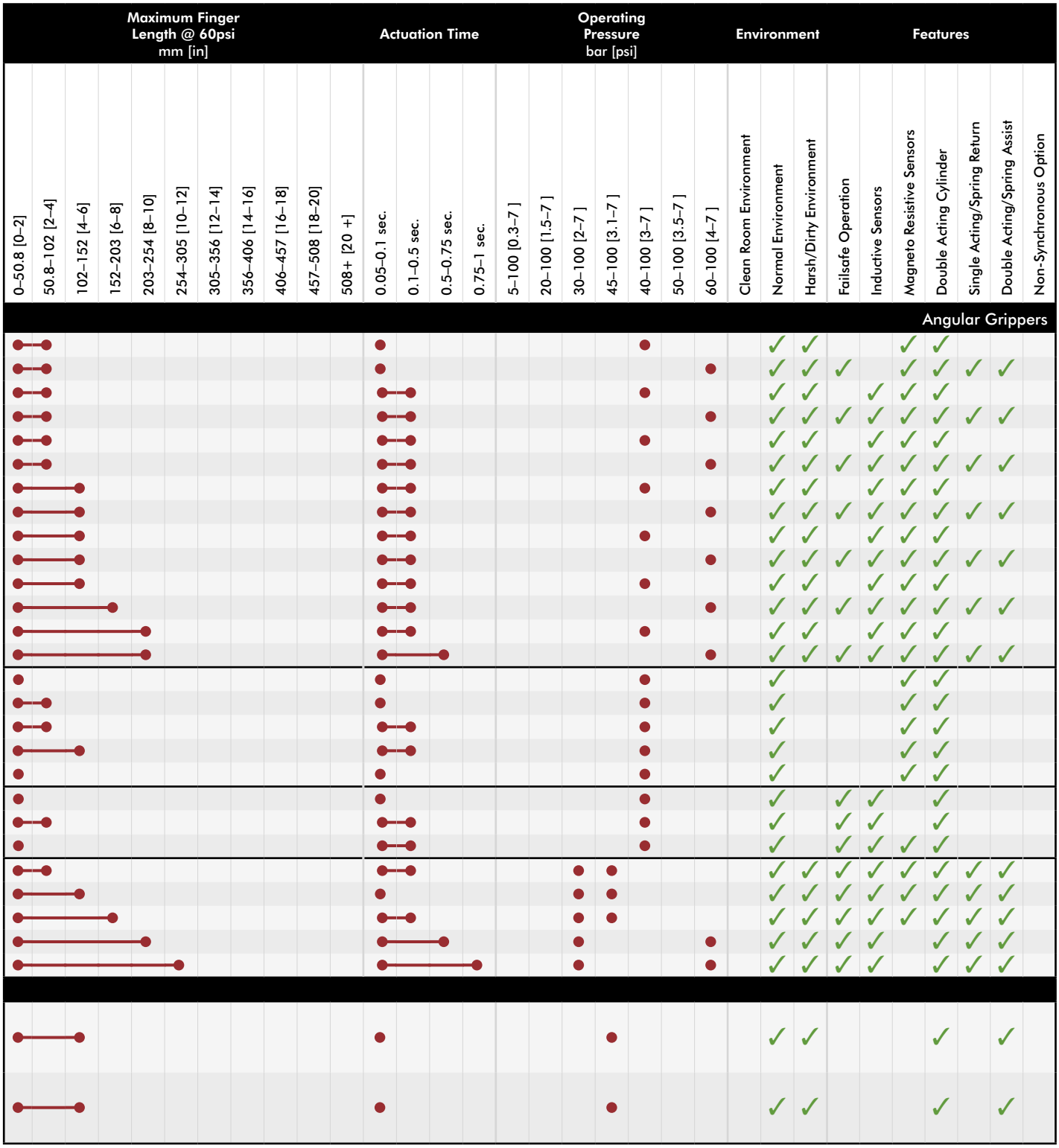

ROTARY ACTUATORS

Sizing and Application Chart

	Series	Page #	Ports/ Mounting: Imperial	Ports/ Mounting: Metric	Rotary Type: Flange Output	Rotary Type: Shaft Output	Basic Unit Dimensions mm [in]: Length	Width	Height	Maximum Torque Nm [in-lb]: 0–111 [0–25]	111–223 [25–50]	223–445 [50–100]	445–678 [100–150]	678–890 [150–200]	890–1335 [200–300]	1335+ [300+]
RR–Light Duty	GR-ROT-#															
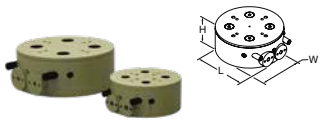	RR-18/-18M	5	●	●	●		61 [2.42]	57.1 [2.25]	24.6 [.969]	●						
	RR-28/-28M	6	●	●	●		83.1 [3.28]	85.7 [3.375]	33.1 [1.313]	●						
RR–Medium Duty	GR-ROT-#															
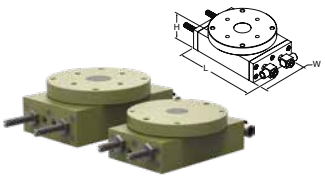	RR-36/-36M	9	●	●	●		170.9 [6.73]	101.6 [4.00]	43.7 [1.72]	●						
	RR-46/-46M	10	●	●	●		203.2 [8.00]	113.5 [4.47]	54.1 [2.13]	●	●					
RR–Heavy Duty	GR-ROT-#															
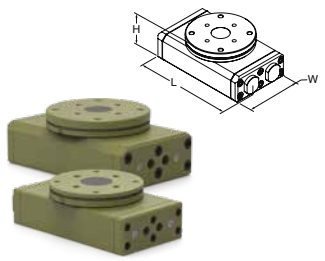	RR-56M	13	●	●	●		[8.50] 215.9	117.5 [4.63]	70.2 [2.77]	●	●	●				
	RR-66M	14	●	●	●		[10.35] 262.8	158.8 [6.25]	96.8 [3.81]	●	●	●	●	●		

ROTARY ACTUATORS

Sizing and Application Chart

Degrees of Rotation				Maximum Payload Kg [lbs]						Maximum Inertia Nm sec^2 x 10^3 [in-lbs sec^2]									Acuation Time 180°				Operating Pressure bar [psi]		Features					
45°	90°	135°	180°	0–10 [0–5]	10–25 [5–11]	25–50 [11–23]	50–100 [23–45]	100–150 [45–68]	150+ [68+]	0.0-0.1 [0.000-0.001]	0.1-0.6 [0.001-0.005]	0.6-1.1 [0.005-0.010]	1.1-2.8 [0.010-0.025]	2.8-5.7 [0.025-0.050]	5.7-11.3 [0.050-0.100]	11.3-56.5 [0.100-0.500]	56.5-282.5 [0.500-2.500]	282.5-565 [2.500-5.000]	0.05–0.1 sec.	0.1–0.5 sec.	0.5–0.75 sec.	0.75+ sec.	2-7 [20-100]	3-7 [40-100]	Inductive Sensors	Magneto Resistive Sensors	Shock Absorbers	Mid-Stop	Air Manifold	High Temperature
RR–Light Duty																													
●	●	●	●	●							●									●			●		✓			✓	✓
●	●	●	●	●									●							●			●		✓			✓	✓
RR–Medium Duty																													
●	●	●	●	●										●						●				●	✓			✓	✓	✓
●	●	●	●	●	●										●					●				●	✓			✓	✓	✓
RR–Heavy Duty																													
●	●	●	●	●	●	●										●				●				●	✓	✓	✓	✓	✓	✓
●	●	●	●	●	●	●	●										●				●			●	✓	✓	✓	✓	✓	✓

LINEAR SLIDES

Sizing and Application Chart

Series	Page #	Slide Type: Base Slide	Slide Type: Thruster Slide	Slide Type: Lift/Block Thruster	Basic Unit Dimensions mm [in]: Length + Stroke	Basic Unit Dimensions mm [in]: Width	Basic Unit Dimensions mm [in]: Height	Maximum Thrust Force N [lbs]: 0–111 [0–25]	111–223 [25–50]	223–445 [50–100]	445–678 [100–150]	678–890 [150–200]	890–1335 [200–300]	1335+ [300+]
Base Slide–Internal Air Cylinder	GR-LIN-#													
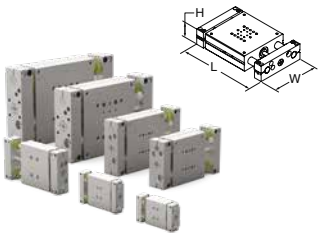														
DLB-06M-B	5	●			81 [3.19]	50.3 [1.98]	23.7 [0.93]	●						
DLB-08M-B	5	●			93.7 [3.69]	62.7 [2.47]	23.7 [0.93]	●						
DLB-10M-B	7	●			143 [5.63]	88.6 [3.49]	31.6 [1.24]	●	●					
DLB-12M-B	7	●			155.7 [6.13]	101.2 [3.98]	42.1 [1.66]	●	●	●				
DLB-16M-B	7	●			174.8 [6.88]	120.3 [4.74]	42.1 [1.66]	●	●	●				
DLB-20M-B	9	●			239.3 [9.42]	164.6 [6.48]	55.4 [2.18]	●	●	●	●			
DLB-25M-B	9	●			275.3 [10.84]	190 [7.48]	55.4 [2.18]	●	●	●	●			
Base Slide–Internal Air Cylinder	GR-LIN-#													
Long Body 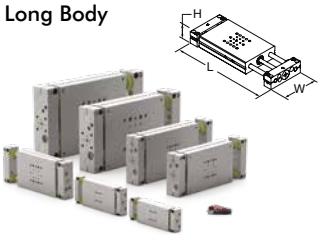														
DLB-06M-L	6	●			125.5 [4.94]	50.3 [1.98]	23.7 [0.93]	●						
DLB-08M-L	6	●			138.2 [5.44]	62.7 [2.47]	23.7 [0.93]	●						
DLB-10M-L	8	●			193.8 [7.63]	88.6 [3.49]	31.6 [1.24]	●	●					
DLB-12M-L	8	●			219.2 [8.63]	101.2 [3.98]	42.1 [1.66]	●	●	●				
DLB-16M-L	8	●			244.6 [9.63]	120.3 [4.74]	42.1 [1.66]	●	●	●				
DLB-20M-L	10	●			290.1 [11.42]	164.6 [6.48]	55.4 [2.18]	●	●	●	●			
DLB-25M-L	10	●			326.1 [12.84]	190 [7.48]	55.4 [2.18]	●	●	●	●			
Linear Thruster Slide–External Cylinder	GR-LIN-#													
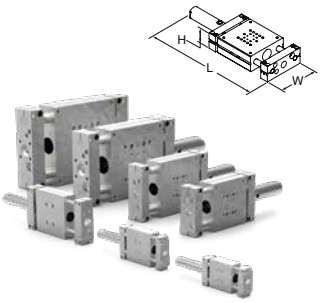														
DLB-06-T	14	●			129.4 [5.09]	50.3 [1.98]	23.7 [0.93]	●						
DLB-08-T	14	●			142.1 [5.59]	62.7 [2.47]	23.7 [0.93]	●						
DLB-10-T, A	15	●			237.4 [9.35]	88.6 [3.49]	31.6 [1.24]	●	●					
DLB-12-T, A	15	●			253.6 [9.98]	101.2 [3.98]	42.1 [1.66]	●	●	●				
DLB-16-T, A	15	●			272.6 [10.73]	120.3 [4.74]	42.1 [1.66]	●	●	●				
DLB-10-N	16	●			236.8 [9.07]	88.6 [3.49]	31.6 [1.24]	●	●					
DLB-12-N	16	●			249.5 [9.57]	101.2 [3.98]	42.1 [1.66]	●	●	●				
DLB-16-N	16	●			268.5 [10.32]	120.3 [4.74]	42.1 [1.66]	●	●	●				
DLB-20-T, A	17	●			315.5 [12.42]	164.6 [6.48]	56.8 [2.24]	●	●	●	●			
DLB-25-T, A	17	●			351.5 [13.84]	190 [7.48]	56.8 [2.24]	●	●	●	●			
DLB-20-N	18	●			337.3 [13.28]	164.6 [6.48]	56.8 [2.24]	●	●	●	●			
DLB-25-N	18	●			373.3 [14.70]	190 [7.48]	56.8 [2.24]	●	●	●	●			

LINEAR SLIDES

Sizing and Application Chart

Maximum Stroke mm [in]													Maximum Payload Kg [lbs]						Operating Pressure bar [psi]			Cylinder Type				Bearings				Features					
0–50.8 [0–2]	50.8–102 [2–4]	102–152 [4–6]	152–203 [6–8]	203–254 [8–10]	254–305 [10–12]	305–356 [12–14]	356–406 [14–16]	406–457 [16–18]	457–508 [18–20]	508–558 [20–22]	558- 610 [22–24]	610+ [24+]	0–10 [0–5]	10–25 [5–11]	25–50 [11–23]	50–100 [23–45]	100–150 [45–68]	150+ [68+]	100 [7]	20–100 [1.4–7]	22–100 [1.7–7]	Internal (Repairable)	External (Replaceable)	External (Replaceable) with Air Cushions	External (NFPA/VDMA) Repairable with Air Cushions	Preloaded Ball Bushing	Composite Bushing	Roller Bearing	Bronze Bushing	Inductive Sensors	Magneto Resistive Sensors	Shock Absorbers	Bumpers and Collars	Independent End Stops	Telescopic Airlines
Base Slide–Internal Air Cylinder																																		
●													●						●			●					●		✓		✓		✓	
●													●						●			●					●		✓		✓		✓	
●													●	●					●			●				●	●		✓		✓		✓	✓
●													●	●	●				●			●				●	●		✓		✓		✓	✓
●	●												●	●	●				●			●				●	●		✓		✓		✓	✓
●	●												●	●	●	●			●			●				●	●		✓		✓		✓	✓
●	●	●											●	●	●	●			●			●				●	●		✓		✓		✓	✓
Base Slide–Internal Air Cylinder–Long Stroke																																		
●	●												●						●			●					●		✓		✓		✓	
●	●												●						●			●					●		✓		✓		✓	
●	●												●	●					●			●				●	●		✓		✓		✓	✓
●	●	●											●	●	●				●			●				●	●		✓		✓		✓	✓
●	●	●											●	●	●				●			●				●	●		✓		✓		✓	✓
●	●	●	●										●	●	●	●			●			●				●	●		✓		✓		✓	✓
●	●	●	●										●	●	●	●			●			●				●	●		✓		✓		✓	✓
Linear Thruster Slide–External Air Cylinder																																		
●	●	●	●										●						●				●				●		✓	✓	✓	✓	✓	
●	●	●	●										●						●				●				●		✓	✓	✓	✓	✓	
●	●	●	●	●	●								●	●					●				●	●		●	●		✓	✓	✓	✓	✓	✓
●	●	●	●	●	●	●							●	●	●				●				●	●		●	●		✓	✓	✓	✓	✓	✓
●	●	●	●	●	●	●	●	●	●				●	●	●				●				●	●		●	●		✓	✓	✓	✓	✓	✓
●	●	●	●	●	●								●	●					●						●	●	●		✓	✓	✓	✓	✓	✓
●	●	●	●	●	●	●	●	●	●				●	●	●				●						●	●	●		✓	✓	✓	✓	✓	✓
●	●	●	●	●	●	●	●	●	●				●	●	●				●						●	●	●		✓	✓	✓	✓	✓	✓
●	●	●	●	●	●	●	●	●	●				●	●	●	●			●				●	●		●	●		✓	✓	✓	✓	✓	✓
●	●	●	●	●	●	●	●	●	●				●	●	●	●	●		●				●	●		●	●		✓	✓	✓	✓	✓	✓
●	●	●	●	●	●	●	●	●	●				●	●	●				●						●	●	●		✓	✓	✓	✓	✓	✓
●	●	●	●	●	●	●	●	●	●				●	●	●	●	●		●						●	●	●		✓	✓	✓	✓	✓	✓

LINEAR SLIDES

Sizing and Application Chart

Series	Page #	Slide Type: Base Slide	Slide Type: Thruster Slide	Slide Type: Lift/Block Thruster	Basic Unit Dimensions mm [in]: Length + Stroke	Basic Unit Dimensions mm [in]: Width	Basic Unit Dimensions mm [in]: Height	Maximum Thrust Force N [lbs]: 0–111 [0–25]	111–223 [25–50]	223–445 [50–100]	445–678 [100–150]	678–890 [150–200]	890–1335 [200–300]	1335+ [300+]
Linear Thruster Slide–Internal Cylinder GR-LIN-#														
Block Style 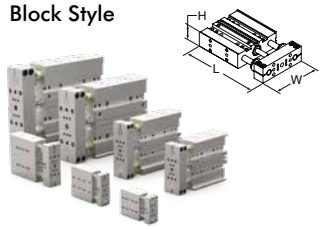														
DLT-06M-B	22		●	●	70.7 [2.78]	50.8 [2.00]	22.4 [0.88]	●						
DLT-08M-B	22		●	●	83.4 [3.28]	63.5 [2.50]	22.4 [0.88]	●						
DLT-10M-B	25		●	●	122.3 [4.81]	88.9 [3.50]	30.2 [1.19]	●	●					
DLT-12M-B	25		●	●	135 [5.31]	101.6 [4.00]	41.4 [1.63]	●	●	●				
DLT-16M-B	25		●	●	155.6 [6.13]	120.7 [4.75]	41.4 [1.63]	●	●	●				
DLT-20M-B	28		●	●	214.9 [8.46]	165.1 [6.50]	55.9 [2.20]	●	●	●	●			
DLT-25M-B	28		●	●	245.6 [9.67]	190.5 [7.50]	55.9 [2.20]	●	●	●	●			
Linear Thruster Slide–Internal Cylinder GR-LIN-#														
Extended Stroke 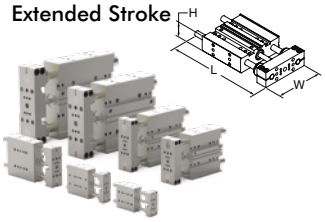														
DLT-06M-E	23		●		87.5 [3.44]	50.8 [2.00]	22.4 [0.88]	●						
DLT-08M-E	23		●		93.8 [3.69]	63.5 [2.50]	22.4 [0.88]	●						
DLT-10M-E	26		●		143.1 [5.63]	88.9 [3.50]	30.2 [1.19]	●	●					
DLT-12M-E	26		●		155.8 [6.13]	101.6 [4.00]	41.4 [1.63]	●	●	●				
DLT-16M-E	26		●		174.9 [6.89]	120.7 [4.75]	41.4 [1.63]	●	●	●				
DLT-20M-E	29		●		239.3 [9.42]	165.1 [6.50]	55.9 [2.20]	●	●	●	●			
DLT-25M-E	29		●		275.3 [10.84]	190.5 [7.50]	55.9 [2.20]	●	●	●	●			
Linear Thruster Slide–Internal Cylinder GR-LIN-#														
Long Body 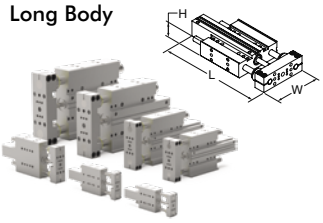														
DLT-06M-L	24		●		115.1 [4.53]	50.8 [2.00]	22.4 [0.88]	●						
DLT-08M-L	24		●		127.8 [5.03]	63.5 [2.50]	22.4 [0.88]	●						
DLT-10M-L	27		●		173.1 [6.81]	88.9 [3.50]	30.2 [1.19]	●	●					
DLT-12M-L	27		●		198.5 [7.81]	101.6 [4.00]	41.4 [1.63]	●	●	●				
DLT-16M-L	27		●		225.5 [8.88]	120.7 [4.75]	41.4 [1.63]	●	●	●				
DLT-20M-L	30		●		271.8 [10.70]	165.1 [6.50]	55.9 [2.20]	●	●	●	●			
DLT-25M-L	30		●		297.2 [11.70]	190.5 [7.50]	55.9 [2.20]	●	●	●	●			
Linear Thruster Slide–External Cylinder GR-LIN-#														
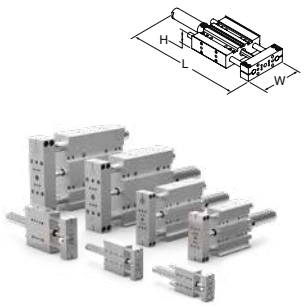														
DLT-06-T	34		●		125.6 [4.94]	50.8 [2.00]	22.4 [0.88]	●						
DLT-08-T	34		●		138.3 [5.44]	63.5 [2.50]	22.4 [0.88]	●						
DLT-10-T, A	35		●		210.3 [8.28]	88.9 [3.50]	30.2 [1.19]	●	●					
DLT-12-T, A	35		●		226.5 [8.92]	101.6 [4.00]	41.4 [1.63]	●	●	●				
DLT-16-T, A	35		●		247.1 [9.73]	120.7 [4.75]	41.4 [1.63]	●	●	●				
DLT-10-N	36		●		209.7 [8.25]	88.9 [3.50]	30.2 [1.19]	●	●					
DLT-12-N	36		●		222.4 [8.75]	101.6 [4.00]	41.4 [1.63]	●	●	●				
DLT-16-N	36		●		243.0 [9.57]	120.7 [4.75]	41.4 [1.63]	●	●	●				
DLT-20-T, A	37		●		322.6 [12.70]	165.1 [6.50]	55.9 [2.20]	●	●	●	●			
DLT-25-T, A	37		●		353.3 [13.91]	190.5 [7.50]	55.9 [2.20]	●	●	●	●			
DLT-20-N	38		●		322.6 [12.70]	165.1 [6.50]	55.9 [2.20]	●	●	●	●			
DLT-25-N	38		●		353.3 [13.91]	190.5 [7.50]	55.9 [2.20]	●	●	●	●			

LINEAR SLIDES

Sizing and Application Chart

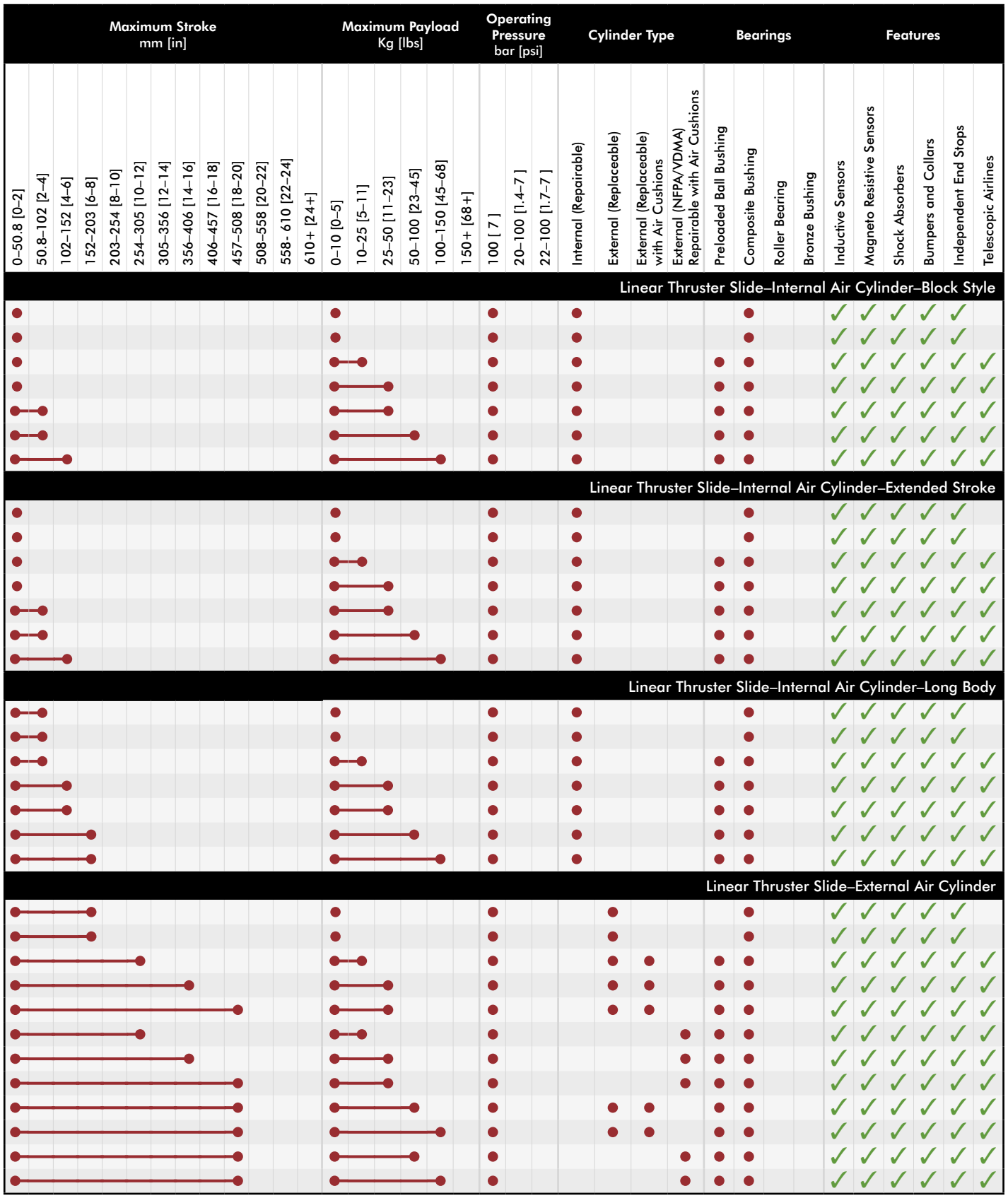

LINEAR SLIDES

Sizing and Application Chart

Series	Page #	Slide Type: Base Slide	Slide Type: Thruster Slide	Slide Type: Lift/Block Thruster	Basic Unit Dimensions mm [in]: Length	Width	Height	Maximum Thrust Force N [lbs]: 0–111 [0–25]	111–223 [25–50]	223–445 [50–100]	445–678 [100–150]	678–890 [150–200]	890–1335 [200–300]	1335+ [300+]
Miniature Rail Thruster Slide	**GR-LIN-#**													
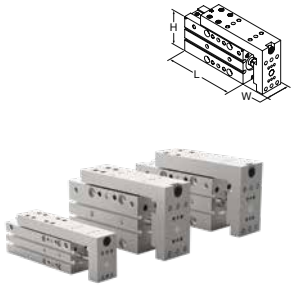														
DLM-07M-12	43		●		78 [3.07]	21 [0.83]	35.5 [1.40]	●						
DLM-07M-25	43		●		102 [4.02]	21 [0.83]	35.5 [1.40]	●						
DLM-07M-38	43		●		115 [4.53]	21 [0.83]	35.5 [1.40]	●						
DLM-07M-50	43		●		127 [5.00]	21 [0.83]	35.5 [1.40]	●						
DLM-09M-25	44		●		113 [4.45]	32 [1.26]	62 [2.44]	●	●					
DLM-09M-50	44		●		159 [6.26]	32 [1.26]	62 [2.44]	●	●					
DLM-09M-75	44		●		184 [7.24]	32 [1.26]	62 [2.44]	●	●					
DLM-09M-100	44		●		209 [8.23]	32 [1.26]	62 [2.44]	●	●					
DLM-12M-50	45		●		122 [4.96]	32 [1.26]	65 [2.56]	●	●	●				
DLM-12M-75	45		●		166 [6.54]	32 [1.26]	65 [2.56]	●	●	●				
DLM-12M-50	45		●		193 [7.60]	32 [1.26]	65 [2.56]	●	●	●				
DLM-12M-100	45		●		218 [8.58]	32 [1.26]	65 [2.56]	●	●	●				
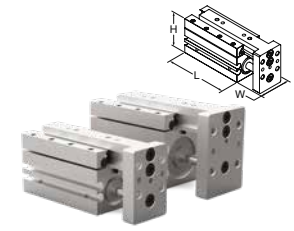														
MPS-1M-1	49		●		46 [1.81]	20.6 [0.81]	31.8 [1.25]	●						
MPS-1M-2	49		●		63.4 [2.50]	20.6 [0.81]	31.8 [1.25]	●						
MPS-1M-3	49		●		88.9 [3.50]	20.6 [0.81]	31.8 [1.25]	●						
MPS-1M-4	49		●		113 [4.45]	20.6 [0.81]	31.8 [1.25]	●						
MPS-2M-1	50		●		46 [1.81]	27 [1.06]	39.7 [1.56]	●	●					
MPS-2M-2	50		●		64.4 [2.54]	27 [1.06]	39.7 [1.56]	●	●					
MPS-2M-3	50		●		88.9 [3.50]	27 [1.06]	39.7 [1.56]	●	●					
MPS-2M-4	50		●		113 [4.45]	27 [1.06]	39.7 [1.56]	●	●					

FEED ESCAPEMENTS

Series	Page #	Shaft: Dual Shaft	Shaft: Single Shaft	Basic Unit Dimensions mm [in]: Length	Width	Height	Max. Thrust Force N [lbs]: 0–111 [0–25]	111–223 [25–50]	223–445 [50–100]	Maximum Stroke mm [in]: 12.7–19.1 [0.50–0.75]	19.1–25.4 [0.75–1.00]	25.4–31.8 [1.00–1.25]	Operating Pressure bar [psi] Cylinder Type: 1.4–7 [40–100]	Internal (Repairable)	Features: Hall Effect Sensors	Non-rotating Shaft	Fail Safe Locking Fingers	Adjustable Retract
Feed Escapements	**GR-ESC-#**																	
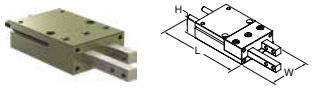																		
RFE-1M	4	●		117 [4.59]	38.1 [1.50]	19.1 [0.75]	●			●			●	●	✓	✓	✓	✓
RFE-2M	5	●		162 [6.39]	57.2 [2.25]	24.9 [0.98]		●			●		●	●	✓	✓	✓	✓
RFE-3M	6	●		197 [7.74]	69.9 [2.75]	34.5 [1.36]			●			●	●	●	✓	✓	✓	✓
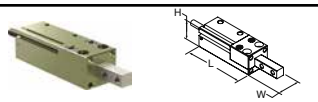																		
RN-1M	8		●	116 [4.59]	22.2 [0.88]	19.1 [0.75]	●			●			●	●	✓	✓		✓
RN-2M	9		●	161 [6.34]	28.6 [1.13]	24.9 [0.98]		●			●		●	●	✓	✓		✓
RN-2M	10		●	195 [7.70]	34.9 [1.38]	34.5 [1.36]			●			●	●	●	✓	✓		✓

Dimensions and technical information are subject to change without notice

Sizing and Application Chart

Maximum Stroke mm [in]													Maximum Payload Kg [lbs]						Operating Pressure bar [psi]			Cylinder Type						Bearings				Features					
0–50.8 [0–2]	50.8–102 [2–4]	102–152 [4–6]	152–203 [6–8]	203–254 [8–10]	254–305 [10–12]	305–356 [12–14]	356–406 [14–16]	406–457 [16–18]	457–508 [18–20]	508–558 [20–22]	558- 610 [22–24]	610+ [24+]	0–10 [0–5]	10–25 [5–11]	25–50 [11–23]	50–100 [23–45]	100–150 [45–68]	150+ [68+]	100 [7]	20–100 [1.4–7]	22–100 [1.7–7]	Internal (Repairable)	External (Replaceable)	External (Replaceable) with Air Cushions	External (VDMA) Repairable w/Air Cushions	External Locking (VDMA) Repairable w/Air Cushions	Customer Supplied	Preloaded Ball Bushing	Composite Bushing	Roller Bearing	Bronze Bushing	Inductive Sensors	Magneto Resistive Sensors	Shock Absorbers	Bumpers and Collars	Independent End Stops	Telescopic Airlines
Miniature Rail Thruster Slide																																				
●													●							●		●								●		✓				
●													●							●		●								●		✓				
●													●							●		●								●		✓				
●													●							●		●								●		✓				
●	●												●							●		●								●		✓				
●	●												●							●		●								●		✓				
●	●												●							●		●								●		✓				
●	●												●							●		●								●		✓				
●	●												●							●		●								●		✓				
●	●												●							●		●								●		✓				
●	●												●							●		●								●		✓				
●													●							●		●								●		✓				
●													●							●		●								●		✓				
●													●							●		●								●		✓				
●													●							●		●								●		✓				
●													●							●		●								●		✓				
●													●							●		●								●		✓				

OEM PRODUCTS

OEM Products | Product Overview

DESTACO's Robohand G110 pneumatic grippers offer affordable gripping solutions that match the price and performance expectations for machine builders and OEM markets.

Engineered to provide better performance, lower maintenance and faster operation, the Robohand OEM solutions deliver high on value for cost sensitive applications.



OEM Pneumatic Parallel Grippers

Model		Stroke mm [in]	Grip Force N [lbf]	Operating Environment	Special Features	Page GR-OEM-#
G110		5-50 [0.20-1.97]	56-558 [13-125]	IP54, -35° to 80°C [-30° to 180°F]	Extended vertical jaw option (G120). Finger interchangeable with competing models. Wide range of stroke and bore sizes.	3

Dimensions and technical information are subject to change without notice

G110 Series - OEM Pneumatic Parallel Grippers

The G110 series family of grippers include 20 model sizes with varying stroke options. An extended jaw option (G120) is offered that is finger compatible with competing products for easier upgrades.



G120 Extended Jaw Option: 100% Finger Compatible



Size	Total Rated Grip Force	Stroke Availability											
		5mm	6mm	10mm	12mm	15mm	18mm	20mm	24mm	25mm	30mm	40mm	50mm
08M	56N [13 lbf]	•		•		•		•		•			
11M	104N [23 lbf]	•		•		•		•		•			
18M	260N [58 lbf]		•		•		•		•		•		
25M	558N [125 lbf]			•				•			•	•	•

G110 SERIES

OEM Parallel Grippers | Features and Benefits | How To Order

Features:

- 20 different models sized to match your application needs
- Fast actuations from 60mS
- Multiple stroke options from 5mm to 50mm
- High grip force, small package from 56N to 558N [13 to 125 lbf]
- Shielded design for clean to moderate manufacturing environments
- Interchangeable gripper fingers with competitive units using extended jaw option
- Locating sleeves for precise finger mounting included with gripper



How To Order



G120 Extended Jaw Option Shown

Size	Stroke	Description
08M	05, 10, 15, 20, 25	for Size 08
11M	05, 10, 15, 20, 25	for Size 11
18M	06, 12, 18, 24, 30	for Size 18
25M	10, 20, 30, 40, 50	for Size 25

Base Model: **G** - ( ) - ( ) - ( ) - **N** - **B**

Seals	Description
B	Buna-N

Jaw Type	Description
110	Horizontal Jaws
120	Extended Jaws*

Options	Description
N	No Options

*Select models only, see finger interchangeability table on page GR-OEM-6

Accessories

G110 Common Accessories	Model Numbers	Part Number	Qty/Unit
Sensor, NPN magneto resistive type, 4mm Barrel	All Models	OHSN-021	1-4
Sensor, PNP magneto resistive type, 4mm Barrel	All Models	OHSP-021	1-4
Cable straight, quick disconnect, socket, 3 conductor, 2M length	All Models	CABL-010	1-4

*Sensor and cable sold separately.



Cable Straight, Quick Disconnect, Socket, 3 Conductor, 2M Length



Long Barrel 4mm Straight Sensor

OHSP-021

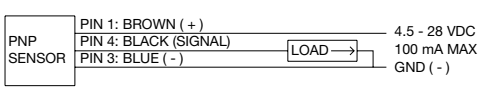

OHSN-021

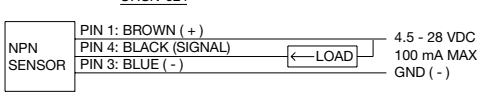

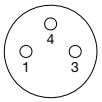

PIN 1: BROWN (+)

PIN 3: BLUE (-)

PIN 4: BLACK (SIGNAL)

Dimensions and technical information are subject to change without notice

G110-08M, G120-08M	Part Number	Qty/Unit
Pneumatic air fitting, straight M3 screw to 3mm tube push-in	PLFT-021	2
Jaw locating sleeve for precise finger mounting	20961-11	4
Seal Kit (includes): End gasket G110-08M (Qty 2) Seal: U-cup Buna replacement seal (Qty 4) Button head socket cap screws (Qty 8)	SLKT-244	1

G110-11M, G120-11M	Part Number	Qty/Unit
Pneumatic air fitting, straight M3 screw to 3mm tube push-in	PLFT-021	2
Jaw locating sleeve for precise finger mounting	20961-11	4
Seal Kit (includes): End gasket G110-11M (Qty 2) Seal: U-cup Buna replacement seal (Qty 4) Button head socket cap screws (Qty 8)	SLKT-245	1

G110-18M, G120-18M	Part Number	Qty/Unit
Pneumatic air fitting, right angle, M5 screw to 6mm tube push-in	PLFT-041	2
Valve kit, failsafe, M5 ports	OFSV-004	1
Jaw locating sleeve for precise finger mounting	20962-11	4
Seal Kit (includes): End gasket G110-18M (Qty 2) Seal: U-cup Buna replacement seal (Qty 4) Button head socket cap screws (Qty 8)	SLKT-246	1

G110-25M, G120-25M	Part Number	Qty/Unit
Pneumatic air fitting, right angle, M5 screw to 6mm tube push-in	PLFT-041	2
Valve kit, failsafe, M5 ports	OFSV-004	1
Jaw locating sleeve for precise finger mounting	20963-11	4
Seal Kit (includes): End gasket G110-25M (Qty 2) Seal: U-cup Buna replacement seal (Qty 4) Button head socket cap screws (Qty 8)	SLKT-247	1



Pneumatic Air Fittings



End Gasket



Jaw Locating Sleeve for Precise Finger Mounting



Valve Kit, Failsafe, M5 Ports



U-cup Buna Replacement Seal



Button Head Socket Cap Screws

G110 SERIES

OEM Parallel Grippers | Quick Installation Kits

Commissioning Kits for Easy Ordering

- Includes just what you need for easy installation
- One quick installation kit required per gripper
- Fast, simple convenient ordering



2 Sensors



2 Air Fittings



4 Jaw Locating Finger Sleeves



4 Finger Mounting Screws

G110-08M, G120-08M	Includes	Part Number	Qty/Kit
Sensor, PNP magneto resistive type, 4mm barrel	OHSP-021	G110-QKST-101	2
Pneumatic air fitting, M3 screw to 3mm tube push-in	PLFT-021		2
Jaw locating sleeve for precise finger mounting	20961-11		4
Finger mounting screws	SHSM025C10		4

G110-11M, G120-11M	Includes	Part Number	Qty/Kit
Sensor, PNP magneto resistive type, 4mm barrel	OHSP-021	G110-QKST-102	2
Pneumatic air fitting, M3 screw to 3mm tube push-in	PLFT-021		2
Jaw locating sleeve for precise finger mounting	20961-11		4
Finger mounting screws	SHSM03C10		4

G110-18M, G120-18M	Includes	Part Number	Qty/Kit
Sensor, PNP magneto resistive type, 4mm barrel	OHSP-021	G110-QKST-103	2
Pneumatic air fitting, right angle, M5 screw to 6mm tube push-in	PLFT-041		2
Jaw locating sleeve for precise finger mounting	20962-11		4
Finger mounting screws	SHSM04C12		4

G110-25M, G120-25M	Includes	Part Number	Qty/Kit
Sensor, PNP magneto resistive type, 4mm barrel	OHSP-021	G110-QKST-104	2
Pneumatic air fitting, right angle, M5 screw to 6mm tube push-in	PLFT-041		2
Jaw locating sleeve for precise finger mounting	20963-11		4
Finger mounting screws	SHSM05C16		4

Dimensions and technical information are subject to change without notice

G110 Series Interchangeable Fingers with Extended Gripper Jaw Option. Fast Gripper Commissioning

- Re-use your existing gripper fingers
- Same finger mounting hole pattern as competitive units
- G110 Series Grippers Deliver:
  - Low Maintenance Shielded Design
  - Smooth Rack and Pinion Operation
  - Fast actuations from 60mS
  - Low height profile
  - All-in-one Commissioning Kits

G120 Extended Jaw Option: 100% Finger Compatible





competitive model

G120 Extended Jaw Option, Finger Interchangeability Table*

(G120 units ship with extended jaw option installed)

Extended Jaw Option Part Number	Mounts to G110 Series Part Number	Compatible with SMC Part Number	Application Notes
G110-FNGR-08M-05	G110-08M-05-N-B	MHZ2-10	G110 has 1mm extra stroke, 9N extra force
G110-FNGR-08M-10	G110-08M-10-N-B	MHZL2-10	G110 has 2mm extra stroke, 10N extra force
G110-FNGR-11M-05	G110-11M-05-N-B	MHZ2-16	G110 has 1mm extra stroke, 13N less force
G110-FNGR-11M-10	G110-11M-10-N-B	MHZL2-16	G110 has 2mm extra stroke, 11N less force
G110-FNGR-18M-12	G110-18M-12-N-B	MHZ2-25	G110 has 2mm extra stroke, 24N extra force
G110-FNGR-18M-24	G110-18M-24-N-B	MHZL2-25	G110 has 2mm extra stroke, 46N extra force
G110-FNGR-25M-20	G110-25M-20-N-B	MHZ2-32	G110 has 2mm extra stroke, 20N less force

*Verify acceptable stroke and force changes in the table above for your application.
G120 units are shipped with the extended jaw option mounted from factory.
SMC is a registered trademark of SMC Corporation.

G110-08M

OEM Parallel Grippers | Dimensions and Technical Specifications



Specifications	Units	08M
Total Rated Grip Force	N [lbf]	56 [13]
Pressure Range	bar [psi]	3-7 [40-100]
Cylinder Bore Diameter	mm [in]	8 [0.31]
Temperature Range (Buna-N Seals)	°C [°F]	-35°~80° [-30°~180°]
Accuracy	mm [in]	±.05 [0.002]
Repeatability	mm [in]	±.05 [0.002]
Valve Required to Actuate		4 way 2 position

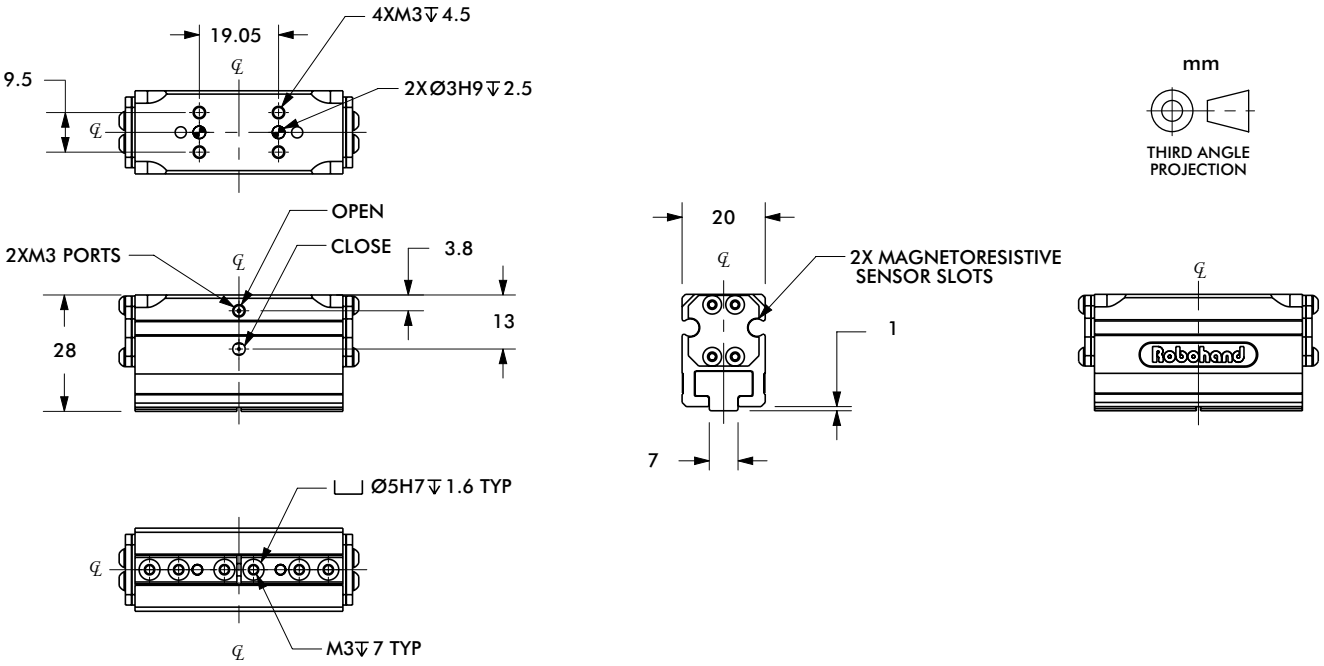

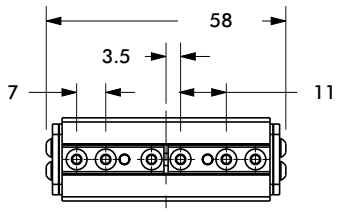

G110-08M-10

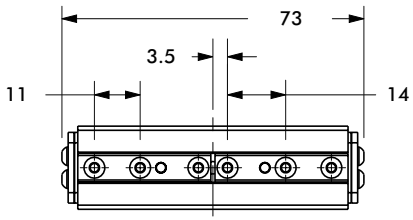

G110-08M-15

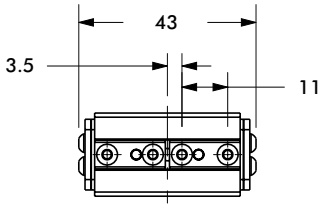

G110-08M-05

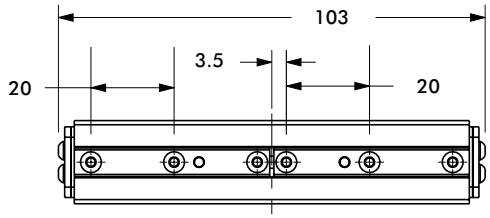

G110-08M-25

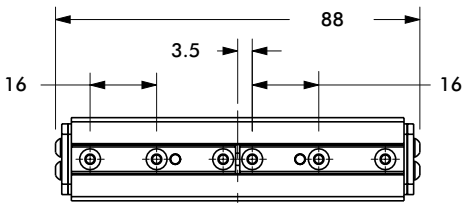

G110-08M-20

Dimensions and technical information are subject to change without notice

G110-08M

OEM Parallel Grippers | Technical Specifications

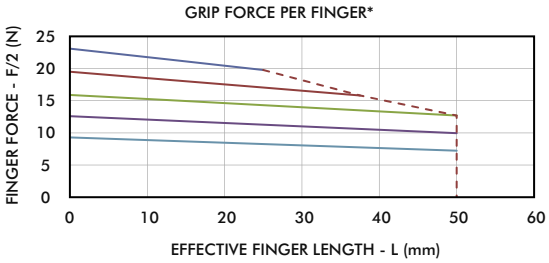

Specifications	Units	08M-05
Stroke	mm [in]	5 [0.20]
Weight	kg [lbs]	0.06 [0.13]
Displacement	cc [cu-in]	0.3 [0.02]
Actuation (open/close)	sec.	0.06
Max Tensile Load on Jaws	N [lbf]	156 [35]
Max Compressive Load on Jaws	N [lbf]	356 [80]
Max Moment on Jaws	Nm [in-lbs]	3.4 [30]

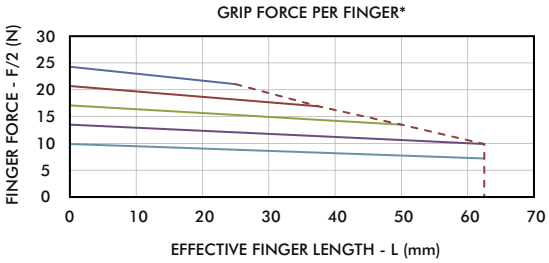

Specifications	Units	08M-10
Stroke	mm [in]	10 [0.39]
Weight	kg [lbs]	0.09 [0.20]
Displacement	cc [cu-in]	0.5 [0.03]
Actuation (open/close)	sec.	0.07
Max Tensile Load on Jaws	N [lbf]	178 [40]
Max Compressive Load on Jaws	N [lbf]	378 [86]
Max Moment on Jaws	Nm [in-lbs]	4 [35]

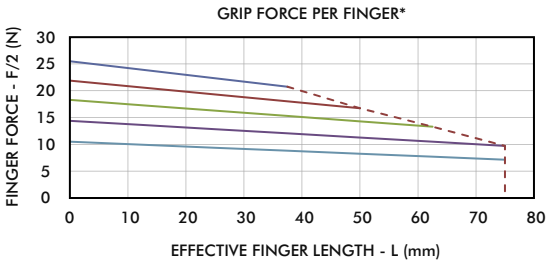

Specifications	Units	08M-15
Stroke	mm [in]	15 [0.59]
Weight	kg [lbs]	0.11 [0.24]
Displacement	cc [cu-in]	0.7 [0.05]
Actuation (open/close)	sec.	0.08
Max Tensile Load on Jaws	N [lbf]	200 [45]
Max Compressive Load on Jaws	N [lbf]	400 [90]
Max Moment on Jaws	Nm [in-lbs]	4.6 [40]

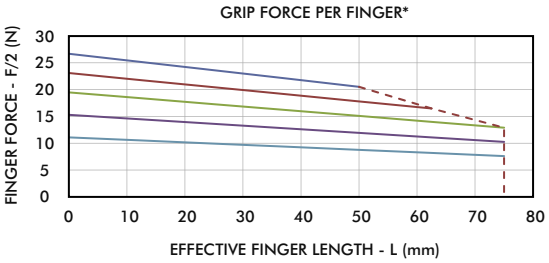

Specifications	Units	08M-20
Stroke	mm [in]	20 [0.79]
Weight	kg [lbs]	0.14 [0.31]
Displacement	cc [cu-in]	1.0 [0.06]
Actuation (open/close)	sec.	0.09
Max Tensile Load on Jaws	N [lbf]	222 [50]
Max Compressive Load on Jaws	N [lbf]	423 [95]
Max Moment on Jaws	Nm [in-lbs]	5.0 [45]

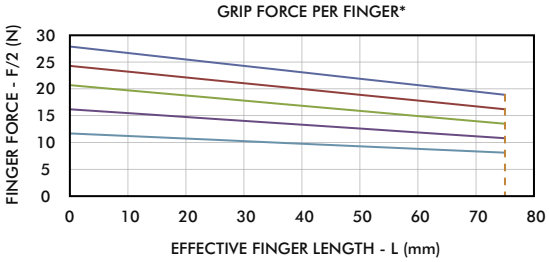

Specifications	Units	08M-25
Stroke	mm [in]	25 [0.98]
Weight	kg [lbs]	0.17 [0.37]
Displacement	cc [cu-in]	1.2 [0.08]
Actuation (open/close)	sec.	0.10
Max Tensile Load on Jaws	N [lbf]	245 [55]
Max Compressive Load on Jaws	N [lbf]	445 [100]
Max Moment on Jaws	Nm [in-lbs]	5.6 [50]



G110-11M

OEM Parallel Grippers | Dimensions and Technical Specifications



Specifications	Units	11M
Total Rated Grip Force	N [lbf]	104 [23]
Pressure Range	bar [psi]	3-7 [40-100]
Cylinder Bore Diameter	mm [in]	11 [0.44]
Temperature Range (Buna-N Seals)	°C [°F]	-35°~80° [-30°~180°]
Accuracy	mm [in]	±.05 [0.002]
Repeatability	mm [in]	±.05 [0.002]
Valve Required to Actuate		4 way 2 position

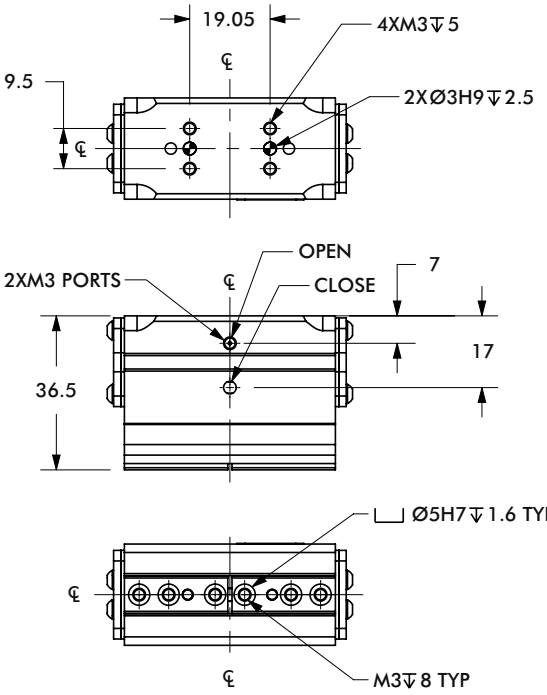

mm

THIRD ANGLE PROJECTION

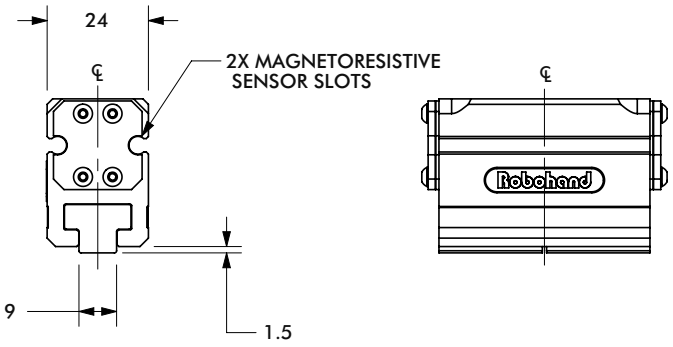

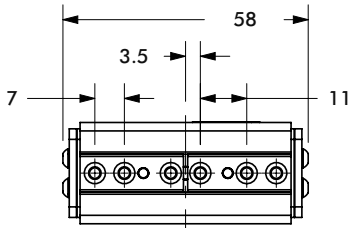

G110-11M-10

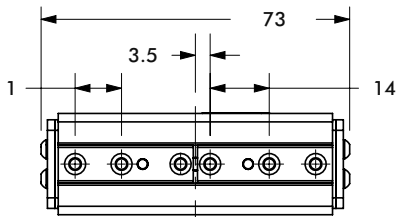

G110-11M-15

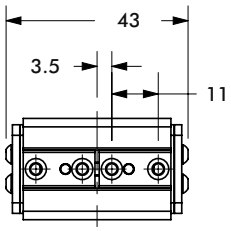

G110-11M-05

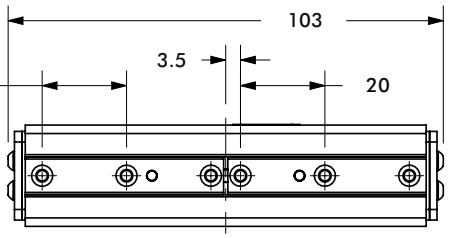

G110-11M-25

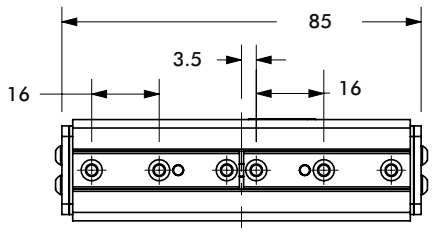

G110-11M-20

Dimensions and technical information are subject to change without notice

G110-11M

OEM Parallel Grippers | Technical Specifications

GRIP FORCE PER FINGER*

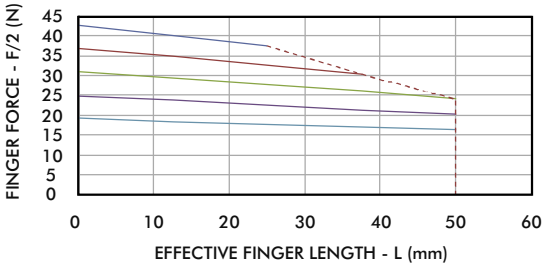

GRIP FORCE PER FINGER*

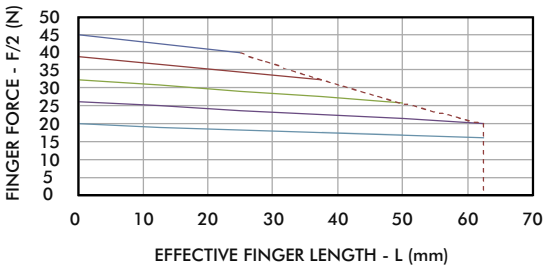

GRIP FORCE PER FINGER*

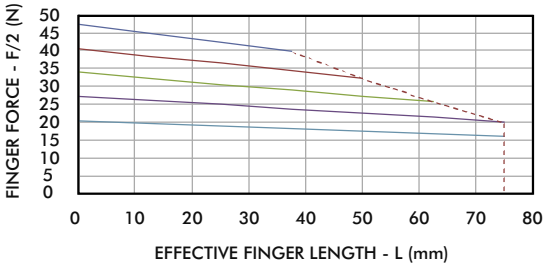

GRIP FORCE PER FINGER*

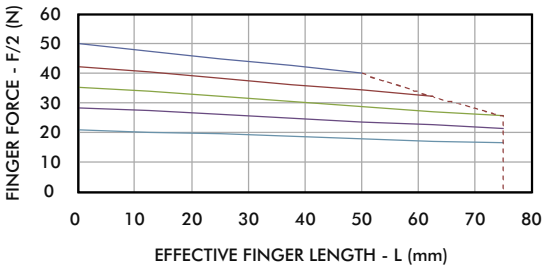

GRIP FORCE PER FINGER*

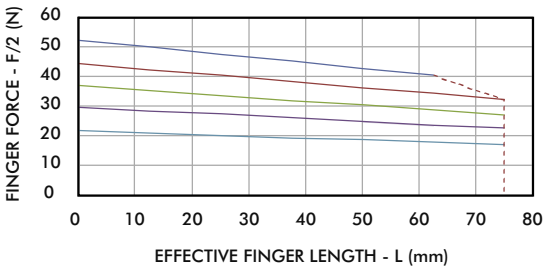



Specifications	Units	11M-05
Stroke	mm [in]	5 [0.20]
Weight	kg [lbs]	0.09 [0.20]
Displacement	cc [cu-in]	0.5 [0.03]
Actuation (open/close)	sec.	0.08
Max Tensile Load on Jaws	N [lbf]	311 [70]
Max Compressive Load on Jaws	N [lbf]	712 [160]
Max Moment on Jaws	Nm [in-lbs]	7 [60]

Specifications	Units	11M-10
Stroke	mm [in]	10 [0.39]
Weight	kg [lbs]	0.13 [0.29]
Displacement	cc [cu-in]	1.0 [0.06]
Actuation (open/close)	sec.	0.09
Max Tensile Load on Jaws	N [lbf]	350 [80]
Max Compressive Load on Jaws	N [lbf]	750 [170]
Max Moment on Jaws	Nm [in-lbs]	8 [70]

Specifications	Units	11M-15
Stroke	mm [in]	15 [0.59]
Weight	kg [lbs]	0.17 [0.37]
Displacement	cc [cu-in]	1.5 [0.09]
Actuation (open/close)	sec.	0.10
Max Tensile Load on Jaws	N [lbf]	400 [90]
Max Compressive Load on Jaws	N [lbf]	800 [180]
Max Moment on Jaws	Nm [in-lbs]	9 [80]

Specifications	Units	11M-20
Stroke	mm [in]	20 [0.79]
Weight	kg [lbs]	0.21 [0.46]
Displacement	cc [cu-in]	1.9 [0.12]
Actuation (open/close)	sec.	0.11
Max Tensile Load on Jaws	N [lbf]	445 [100]
Max Compressive Load on Jaws	N [lbf]	845 [190]
Max Moment on Jaws	Nm [in-lbs]	10 [90]

Specifications	Units	11M-25
Stroke	mm [in]	25 [0.98]
Weight	kg [lbs]	0.25 [0.55]
Displacement	cc [cu-in]	1.2 [0.15]
Actuation (open/close)	sec.	0.12
Max Tensile Load on Jaws	N [lbf]	490 [110]
Max Compressive Load on Jaws	N [lbf]	890 [200]
Max Moment on Jaws	Nm [in-lbs]	11 [100]

G110-18M

OEM Parallel Grippers | Dimensions and Technical Specifications



Specifications	Units	18M
Total Rated Grip Force	N [lbf]	260 [58]
Pressure Range	bar [psi]	3-7 [40-100]
Cylinder Bore Diameter	mm [in]	17.5 [0.69]
Temperature Range (Buna-N Seals)	°C [°F]	-35°~80° [-30°~180°]
Accuracy	mm [in]	±.05 [0.002]
Repeatability	mm [in]	±.05 [0.002]
Valve Required to Actuate		4 way 2 position

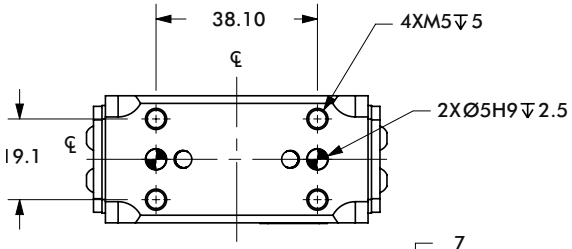

mm

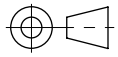

THIRD ANGLE PROJECTION

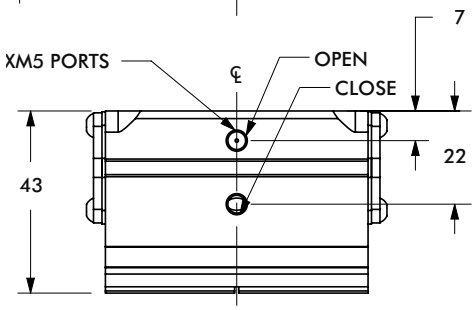

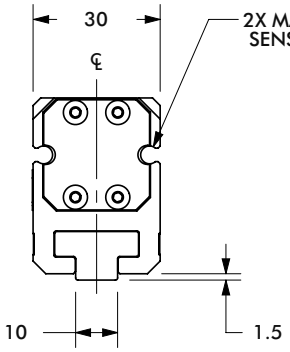

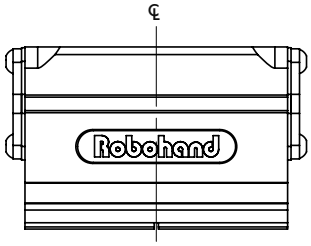

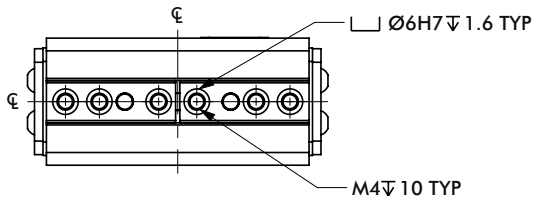

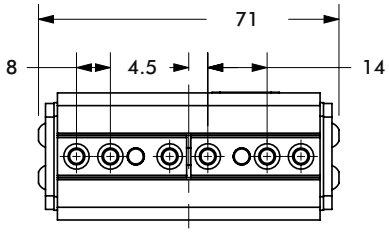

G110-18M-12

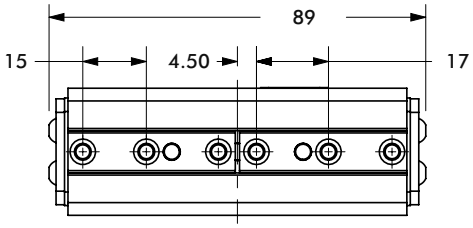

G110-18M-18

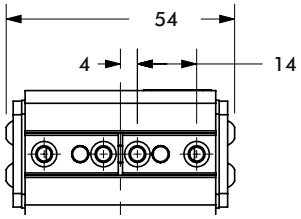

G110-18M-06

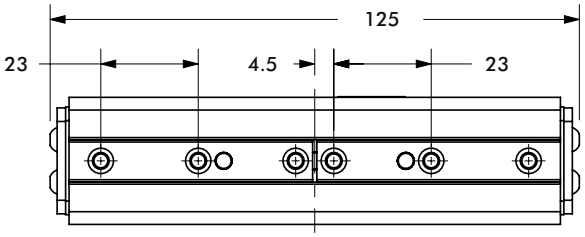

G110-18M-30

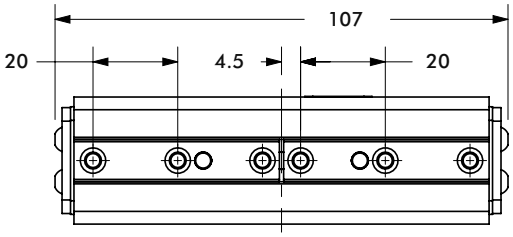

G110-18M-24

Dimensions and technical information are subject to change without notice

G110-18M

OEM Parallel Grippers | Technical Specifications

GRIP FORCE PER FINGER*

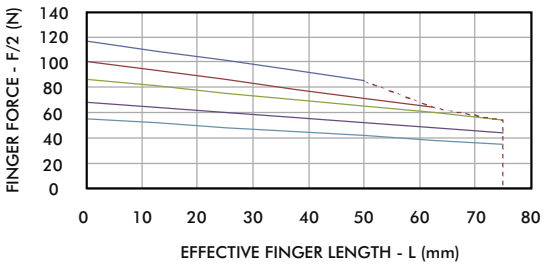

GRIP FORCE PER FINGER*

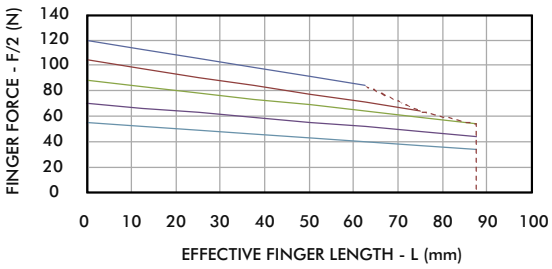

GRIP FORCE PER FINGER*

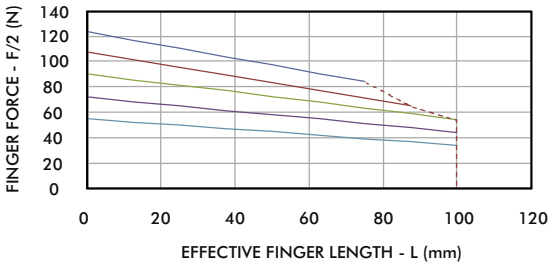

GRIP FORCE PER FINGER*

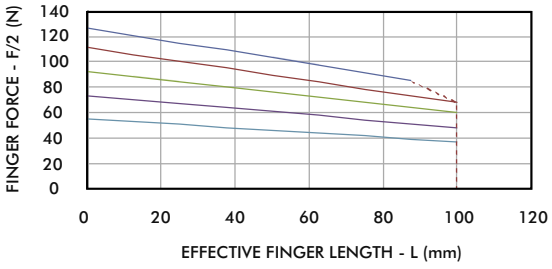

GRIP FORCE PER FINGER*

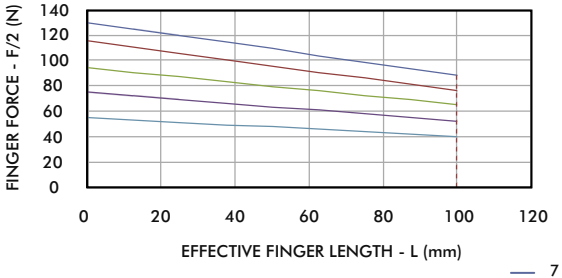



Specifications	Units	18M-06
Stroke	mm [in]	6 [0.24]
Weight	kg [lbs]	0.20 [0.44]
Displacement	cc [cu-in]	1.5 [0.09]
Actuation (open/close)	sec.	0.09
Max Tensile Load on Jaws	N [lbf]	778 [175]
Max Compressive Load on Jaws	N [lbf]	1779 [400]
Max Moment on Jaws	Nm [in-lbs]	17 [150]

Specifications	Units	18M-12
Stroke	mm [in]	12 [0.47]
Weight	kg [lbs]	0.22 [0.48]
Displacement	cc [cu-in]	2.9 [0.18]
Actuation (open/close)	sec.	0.13
Max Tensile Load on Jaws	N [lbf]	890 [200]
Max Compressive Load on Jaws	N [lbf]	1890 [425]
Max Moment on Jaws	Nm [in-lbs]	20 [175]

Specifications	Units	18M-18
Stroke	mm [in]	18 [0.71]
Weight	kg [lbs]	0.28 [0.62]
Displacement	cc [cu-in]	4.3 [0.26]
Actuation (open/close)	sec.	0.17
Max Tensile Load on Jaws	N [lbf]	1000 [225]
Max Compressive Load on Jaws	N [lbf]	2000 [450]
Max Moment on Jaws	Nm [in-lbs]	23 [200]

Specifications	Units	18M-24
Stroke	mm [in]	24 [0.94]
Weight	kg [lbs]	0.34 [0.75]
Displacement	cc [cu-in]	5.8 [0.35]
Actuation (open/close)	sec.	0.21
Max Tensile Load on Jaws	N [lbf]	1112 [250]
Max Compressive Load on Jaws	N [lbf]	2113 [475]
Max Moment on Jaws	Nm [in-lbs]	25 [225]

Specifications	Units	18M-30
Stroke	mm [in]	30 [1.18]
Weight	kg [lbs]	0.41 [0.90]
Displacement	cc [cu-in]	7.2 [0.44]
Actuation (open/close)	sec.	0.25
Max Tensile Load on Jaws	N [lbf]	1223 [275]
Max Compressive Load on Jaws	N [lbf]	2225 [500]
Max Moment on Jaws	Nm [in-lbs]	28 [250]

G110-25M

OEM Parallel Grippers | Dimensions and Technical Specifications



Specifications	Units	25M
Total Rated Grip Force	N [lbf]	558 [125]
Pressure Range	bar [psi]	3-7 [40-100]
Cylinder Bore Diameter	mm [in]	25 [1.00]
Temperature Range (Buna-N Seals)	°C [°F]	-35°~80° [-30°~180°]
Accuracy	mm [in]	±.05 [0.002]
Repeatability	mm [in]	±.05 [0.002]
Valve Required to Actuate		4 way 2 position

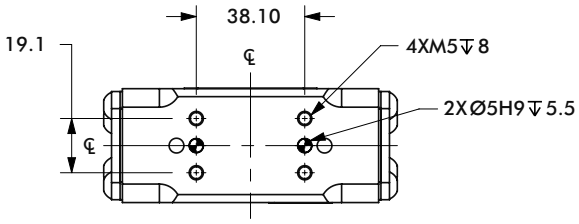

mm

THIRD ANGLE PROJECTION

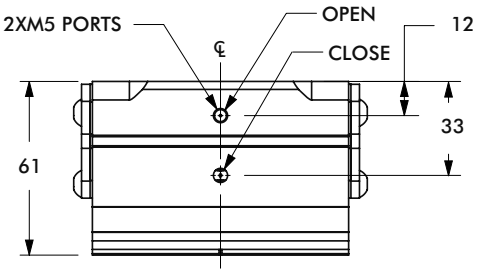

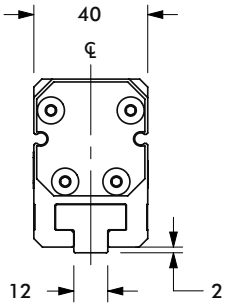

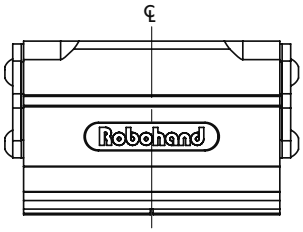

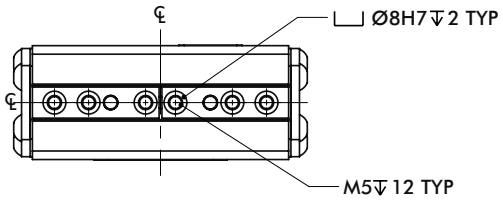

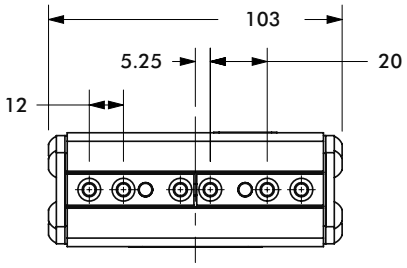

G110-25M-20

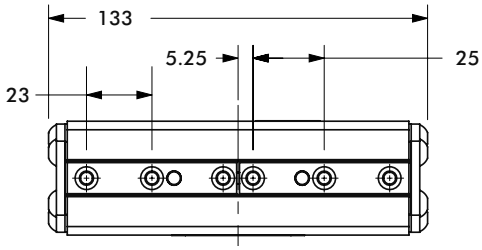

G110-25M-30

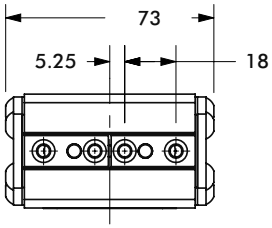

G110-25M-10

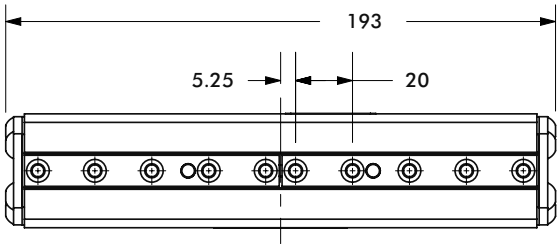

G110-25M-50

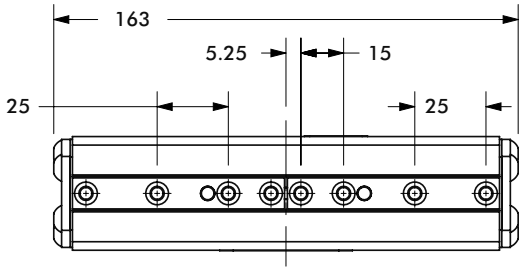

G110-25M-40

Dimensions and technical information are subject to change without notice

G110-25M

OEM Parallel Grippers | Technical Specifications

GRIP FORCE PER FINGER*

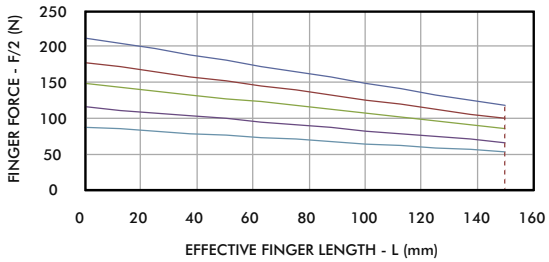

GRIP FORCE PER FINGER*

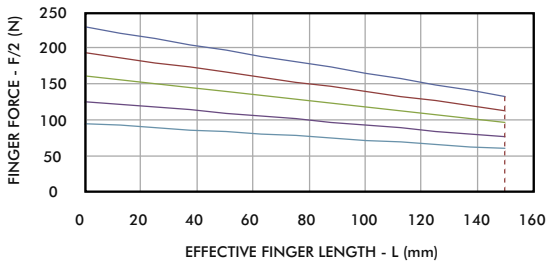

GRIP FORCE PER FINGER*

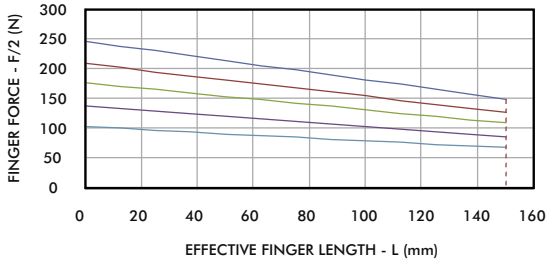

GRIP FORCE PER FINGER*

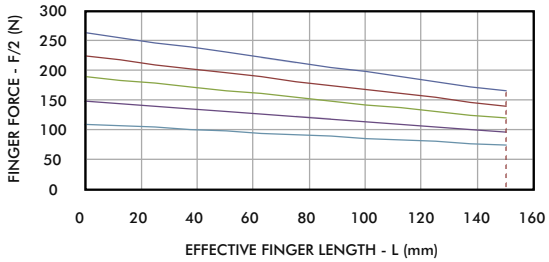

GRIP FORCE PER FINGER*

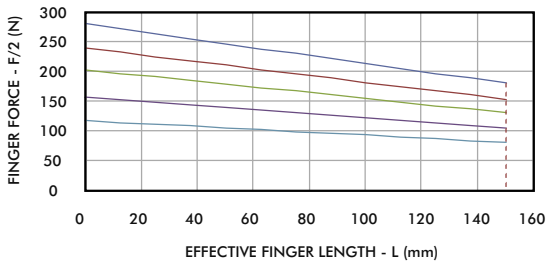

7 bar (102 psi)
6 bar (87 psi)
5 bar (73 psi)
4 bar (58 psi)
3 bar (44 psi)
MAX FINGER LENGTH

Specifications	Units	25M-10
Stroke	mm [in]	10 [0.39]
Weight	kg [lbs]	0.42 [0.92]
Displacement	cc [cu-in]	5.06 [0.31]
Actuation (open/close)	sec.	0.28
Max Tensile Load on Jaws	N [lbf]	1550 [350]
Max Compressive Load on Jaws	N [lbf]	3550 [800]
Max Moment on Jaws	Nm [in-lbs]	35 [300]

Specifications	Units	25M-20
Stroke	mm [in]	20 [0.79]
Weight	kg [lbs]	0.64 [1.41]
Displacement	cc [cu-in]	10.12 [0.62]
Actuation (open/close)	sec.	0.36
Max Tensile Load on Jaws	N [lbf]	1750 [400]
Max Compressive Load on Jaws	N [lbf]	3775 [850]
Max Moment on Jaws	Nm [in-lbs]	40 [350]

Specifications	Units	25M-30
Stroke	mm [in]	30 [1.18]
Weight	kg [lbs]	0.85 [1.87]
Displacement	cc [cu-in]	15.19 [0.93]
Actuation (open/close)	sec.	0.44
Max Tensile Load on Jaws	N [lbf]	2000 [450]
Max Compressive Load on Jaws	N [lbf]	4000 [900]
Max Moment on Jaws	Nm [in-lbs]	45 [400]

Specifications	Units	25M-40
Stroke	mm [in]	40 [1.57]
Weight	kg [lbs]	1.03 [2.27]
Displacement	cc [cu-in]	20.3 [1.24]
Actuation (open/close)	sec.	0.52
Max Tensile Load on Jaws	N [lbf]	2225 [500]
Max Compressive Load on Jaws	N [lbf]	4225 [950]
Max Moment on Jaws	Nm [in-lbs]	50 [450]

Specifications	Units	25M-50
Stroke	mm [in]	50 [1.97]
Weight	kg [lbs]	1.22 [2.68]
Displacement	cc [cu-in]	25.31 [1.55]
Actuation (open/close)	sec.	0.61
Max Tensile Load on Jaws	N [lbf]	2450 [550]
Max Compressive Load on Jaws	N [lbf]	4450 [1000]
Max Moment on Jaws	Nm [in-lbs]	55 [500]

ELECTRIC PARALLEL GRIPPERS

Electric Parallel Grippers | Product Overview

Model		Stroke mm [in]	Grip Force N [lbs]	Operating Environment	Special Features	Page GR-CRP-#
DPE 400		10-20 [0.39-0.78]	445-1334 [100-300]	IP 50 Clean Room Class 100, ISO 5, General Industrial	Adjustable Force, Discrete on/off open and close control. Onboard controls. DIRECTCONNECT	5
DPE 200		25 [0.98]	111 [25]	IP54 Clean Room Class 1000, ISO 6 General Industrial	Discrete on/off open and close control. Sealed design. Multiple sensor positions. Onboard controls. DIRECTCONNECT	7
RPE		4 [0.16]	5 [1.1]	IP54 Clean Room Class 10, ISO 4 using Scavenge Port, General Industrial	Discrete on/off 50ms pulse open and close control. Small parts handling. High speed.	9

Dimensions and technical information are subject to change without notice

ELECTRIC PARALLEL GRIPPERS

Modular DIRECTCONNECT Mounting Style Examples:

Products can be mounted in multiple positions. Refer to datasheet for complete info.

Slide to Gripper

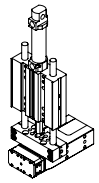

DLT Thruster Slide to DPE-200 Electric Gripper

Slide to Gripper

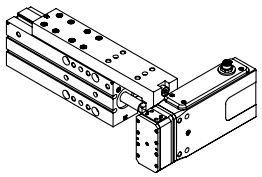

DLM Thruster Slide to DPE-200 Electric Gripper

Slide to Gripper

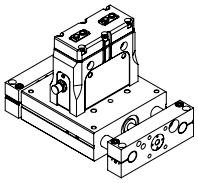

DLB Base Slide to DPE-400 Electric Gripper

Slide to Gripper

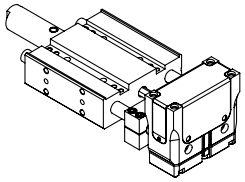

DLT Thruster Slide to DPE-400 Electric Gripper

DIRECTCONNECT™ Mounting Compatibility Chart

DESTACO's DIRECTCONNECT™ technology, allows all components of the system–grippers and slides—to be mounted together directly. Look for matching icons on product datasheets for mounting compatibility.

Note: The numbers in the cell represent the metric screw size and basic mounting pattern.
S=Square, R=Rectangle. ie; 5S = M5 Screw with square mounting pattern.

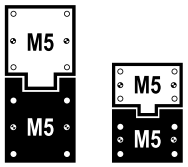

5S 5R

Catalog Models		2 Jaw Electric Parallel Grippers	
		DPE-200	DPE-400
Base Slides	DLB-06,08		
	DLB-10,12,16	5R	
	DLB-20,25		10R
Thruster Slides	DLT-06,08		
	DLT-10,12,16	5R	
	DLT-20,25	5R	10R
	DLM-07		
	DLM-9,12	5R	

E-GRIPPER SERIES

Electric Parallel Grippers | Features and Benefits

Plug-and-Play e-Grippers

Quick Installation
Unit installs quickly using one cable for both power and operation. DIRECTCONNECT™ feature on DPE units allows mounting to rotaries and slides without adapter plates.

Light Switch Operation
No tuning or programming required. Grippers use discrete PLC outputs to control open and close operation. Grippers are powered by 24VDC.

Zero Maintenance
Zero maintenance required for standard environments. Units are internally lubricated and sealed. No air lines, valves, tubing, filters or compressor to interfere with high reliable operations.

100% Duty Cycle Operation for Durability
DPE Series supports continuous open/close command signal operation. Tight mechanical tolerances minimize wear leading to high life cycle operations.



RPE 100
5N [1 lbf]

DPE 200
111N [25 lbf]

DPE 400
1334 N [300 lbf]

DESTACO vs. Others

Features	DESTACO Light Switch Operation	Competing Units
Direct Mechanical Drive[1]	☑	
Integrated Motor Controls[2]	☑	
Zero Maintenance[3]	☑	
DIRECTCONNECT™[4]	☑	
Programming Software[5]		☑
Clean Room Certified	☑	☑
Zero Backlash/Side Play	☑	

1 DESTACO uses a direct mechanical linkage to drive the jaws and eliminate finger play, as opposed to a belt drive design.

2 Integrated electronics decreases cabling and space requirements, while increasing overall system integrity.

3 Competing units recommend lubrication maintenance intervals.

4 DIRECTCONNECT™ allows units to be mounted to rotaries or slides without adapter plates .

5 Light Switch operation products require no software.

Dimensions and technical information are subject to change without notice

Electric Parallel Grippers | Compare the eGripper Series

Features	DPE-400	DPE-200	RPE-100
Grip Force Range	445-1334N [100-300 lbf]	111N [25 lbf]	5N [1.1 lbf]
Stroke Range	10mm [0.39 in] or 20mm [0.78 in]	25mm [0.98 in]	4mm [0.16 in]
Actuation (open/close)	800 ms	250 ms	100 ms
Accuracy	±0.05mm [0.002 in]	±0.05mm [0.002 in]	±0.05mm [0.002 in]
Jaw Drive Mechanism	Lead Screw/Wedge	Rack-and-Pinion	Solenoid Plunger
Adjustable Grip Force	☑		
100% Duty Cycle	☑	☑	
DIRECTCONNECT™ Feature	☑	☑	
FailSafe Operation			☑
Internal Sensing	☑		
IP Rating	IP50	IP54	IP54

Clean Room Rated:

DESTACO's electric products are ideal for food, medical and clean room applications. Electric products are internally lubricated and sealed, per the chart below:

Clean Room Rating	DPE-400	DPE-200	RPE-100
	100	1000	100
Lubricant	Magnalube	Krytox	Krytox

Contact DESTACO for a full range of clean room certified products at solutions@destaco.com

DPE-400 HEAVY-DUTY

Electric Parallel Grippers | Features and Benefits | Technical Specifications



Features:

- Two stroke ranges from 0 to 10mm and 0 to 20mm
- Grip Force adjust-ability from 100% to 50% controlled from the 0 to 5VDC analog input
- Fully integrated electronics, no programming or software Operates from PLC discrete open/close commands
- Reverse polarity protection to protect from application mis-wiring
- DIRECTCONNECT™ mounting to rotaries and slides without requiring adapter plates
- Open and close sensing via built-in motor feedback signal
- Clean room 100 rated

How To Order

Base Model	Stroke	Description	Internal Sensing	Description
DPE-400	10	10mm	P	PNP
	20	20mm	N	NPN

Gripping Mode	Description
OD	Applies Max force on Close
ID	Applies Max force on Open



OD (Outside Diameter)



ID (Inside Diameter)

Accessories

Power and Sensor Accessories	Part Number
PNP Magneto-Resistive Position Sensor	OHSP-017
NPN Magneto-Resistive Position Sensor	OHSN-017
Quick Disconnect Sensor Cable, 5m long	CABL-013
8-wire Power and Signal Cable, 5m long with Straight M12 Connector	CABL-052
8-wire Power and Signal Cable, 5m long with 90° M12 Connector	CABL-053

*Sensor and cable sold separately.

Electrical Interface: Pin Out

(Looking into the head of the connector on gripper)

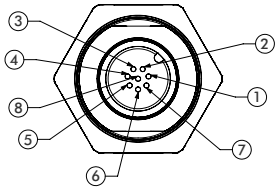

Voltage shown is applied to the FORCE pin, which accepts a 0-5V analog signal.

Pin #	Color	Signal	Description	Current
1	White	Force	0-5 VDC (Analog)	5mA
2	Brown	+24V	Motor Power	2A (max), 0.4 A (avg)
3	Green	Open	24 VDC Active (Inputs)	10mA
4	Yellow	Open Sense	NPN/PNP (Outputs)	300mA (max)
5	Gray	Close	24 VDC Active (Inputs)	10mA
6	Pink	Close Sense	NPN/PNP (Outputs)	300mA (max)
7	Blue	Ground	Motor Ground	2A (max),
8	Red	I/O Power	24 VDC (PNP Outputs Only)	300mA (max)

Dimensions and technical information are subject to change without notice

DPE-400 HEAVY-DUTY

Electric Parallel Grippers | Dimensions and Technical Specifications

Specifications	Units	DPE-400
Total Rated Grip Force:		
DPE-400-10	N [lbf]	667-1334 [150-300]
DPE-400-20	N [lbf]	445-890 [100-200]
Total Stroke:		
DPE-400-10	mm [in]	10 [0.39]
DPE-400-20	mm [in]	20 [0.78]
Repeatability	mm [in]	±0.025 [0.001]
Accuracy	mm [in]	±0.05 [0.002]
Actuation Time	ms	800
Temperature Range	°C [°F]	0~55° [32°~131°]
Power Requirements @ 100% Duty Cycle	watts	10
Voltage	VDC	24
DC Current (Peak)	amps	2 (max)
DC Current: (Continuous)	amps	0.4
Ingress Protection Class (IP)		IP50
Clean Room		100 (Magnalube)
Weight	kg [lbs]	2.52 [5.56]
Maximum Finger Length	mm [in]	125 [4.92]
Durability	cycles	3 Million

mm [INCH]

THIRD ANGLE PROJECTION



Shown with customer supplied fingers.

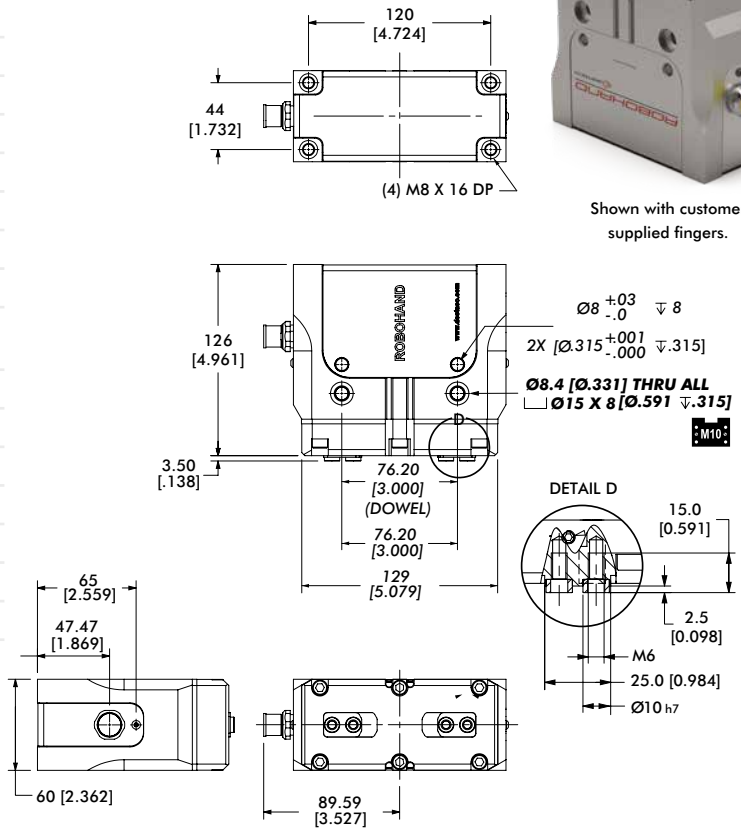

NOTE: REVERSE POLARITY PROTECTED

Loading Information

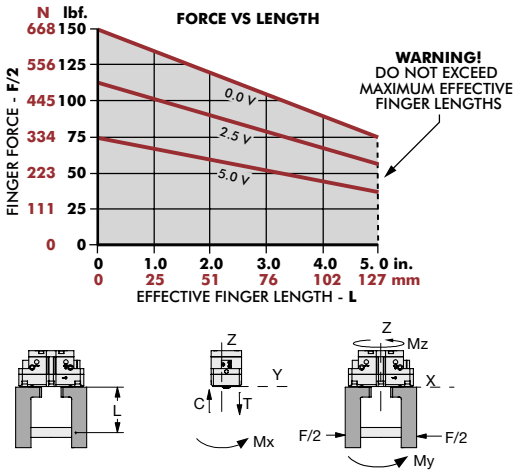

DPE-400-10	Static	Dynamic
Maximum Tensile **T**	1564 N [352 lbs]	259 N [58 lbs]
Maximum Compressive **C**	2070 N [465 lbs]	259 N [58 lbs]
Maximum Moment **Mx**	76 Nm [673 in-lbs]	10 Nm [89 in-lbs]
Maximum Moment **My**	106 Nm [938 in-lbs]	14 Nm [124 in-lbs]
Maximum Moment **Mz**	70 Nm [620 in-lbs]	14 Nm [124 in-lbs]

†Capacities are per set of jaws and are not simultaneous

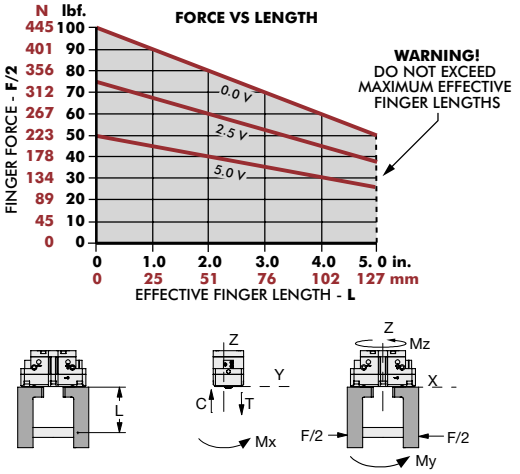

DPE-400-20	Static	Dynamic
Maximum Tensile **T**	1394 N [313 lbs]	168 N [38 lbs]
Maximum Compressive **C**	1845 N [415 lbs]	168 N [38 lbs]
Maximum Moment **Mx**	68 Nm [602 in-lbs]	6 Nm [53 in-lbs]
Maximum Moment **My**	84 Nm [743 in-lbs]	8 Nm [71 in-lbs]
Maximum Moment **Mz**	56 Nm [496 in-lbs]	8 Nm [71 in-lbs]

†Capacities are per set of jaws and are not simultaneous

DPE-200 MEDIUM-DUTY

Electric Parallel Grippers | Features and Benefits | How To Order

Features:

- Ideal for semiconductor and life sciences laboratory applications
- Fast parts handling with grip speeds capable of 120 parts per minute with a 25mm stroke and 250ms actuation time
- High reliability up to four times longer than pneumatic equivalents
- Maintenance free internally lubricated and sealed
- Precision rack-and-pinion drive helps to maintain grip accuracy of +/- 0.05mm (0.002in)
- Fully integrated electronics, no programming or software. Operates from PLC discrete open/close commands
- Reverse polarity protection to protect from application mis-wiring
- DIRECTCONNECT™ mounting to rotaries and slides without requiring adapter plates
- Clean room 1000 rated

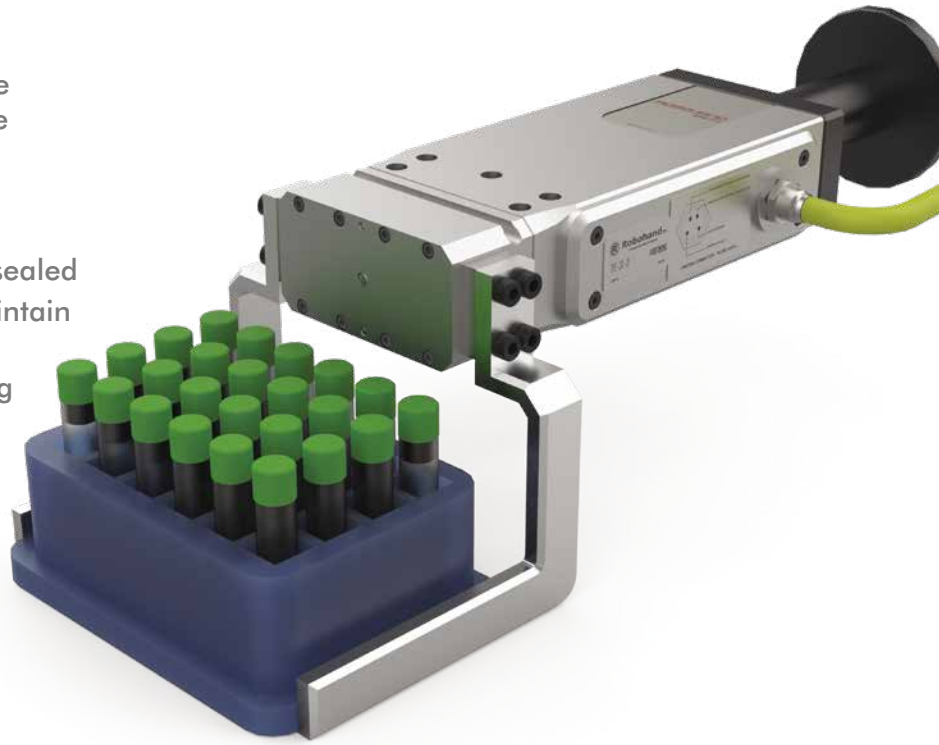

How To Order

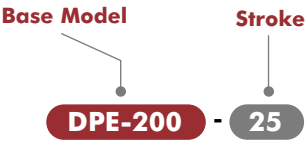

Accessories

Power and Sensor Accessories	Part Number
PNP Magneto-Resistive Position Sensor	OHSP-017
NPN Magneto-Resistive Position Sensor	OHSN-017
Quick Disconnect Sensor Cable, 5m Long	CABL-013
4-wire Power and Signal Cable, 5m Long	CABL-046

*Sensor and cable sold separately.

Electrical Interface: Pin Out

(Looking into the head of the connector on gripper)

ELECTRICAL INTERFACE

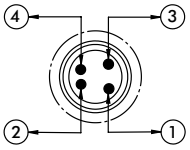

PIN OUT (LOOKING INTO HEADER CONNECTOR ON GRIPPER)

1 ..... BROWN (+ 24 VDC)
2 ..... WHITE (OPEN GRIPPER) +24 VDC = ACTIVE
3 ..... BLUE (GROUND)
4 ..... BLACK (CLOSE GRIPPER) +24 VDC = ACTIVE

CABLE # CABL-046

Dimensions and technical information are subject to change without notice

DPE-200 MEDIUM-DUTY

Electric Parallel Grippers | Dimensions and Technical Specifications



Shown with customer supplied fingers.

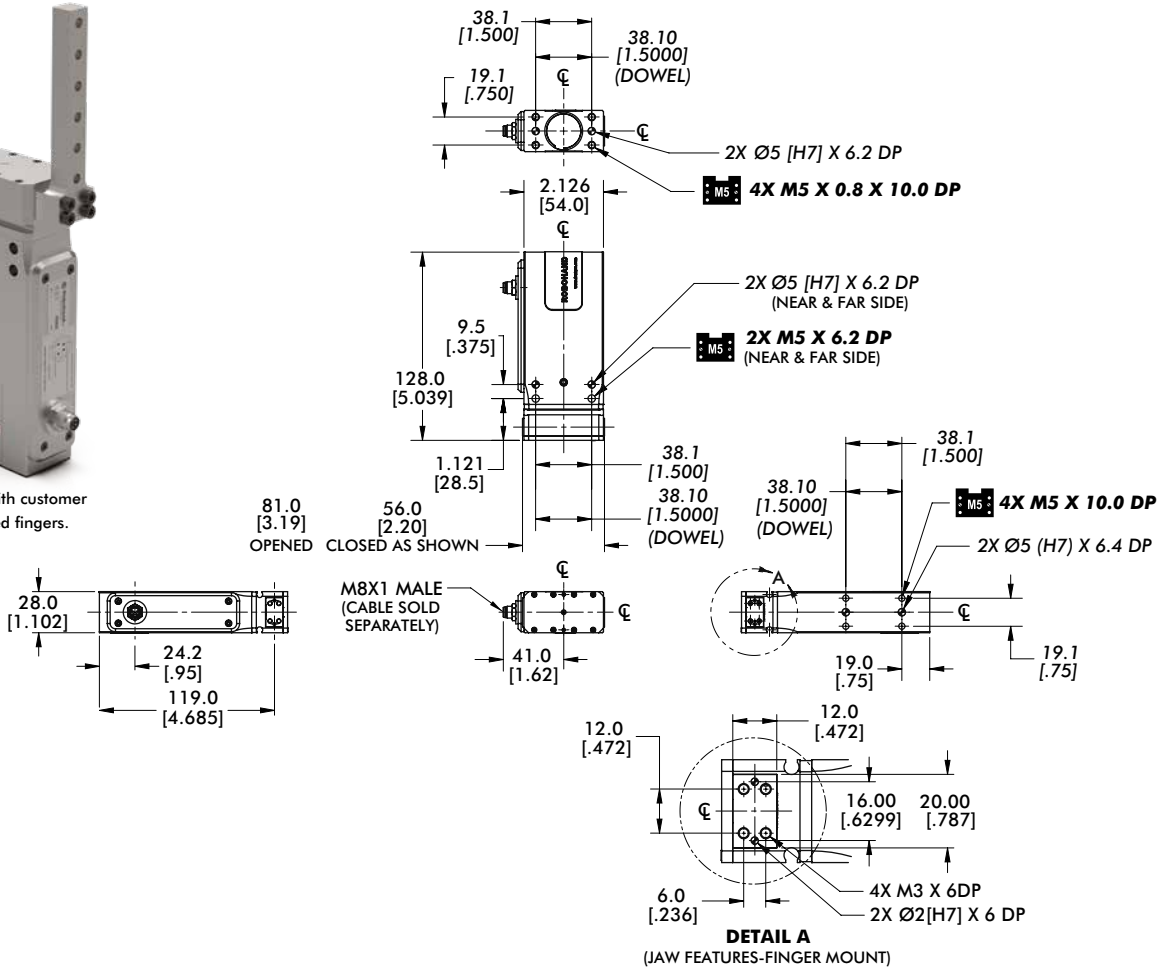

Specifications

Specifications	Units	DPE-200-25
Total Grip Force	N [lbf]	111 [25]
Stroke	mm [in]	25 [0.98]
Repeatability	mm [in]	±0.025 [0.001]
Accuracy	mm [in]	±0.051 [0.002]
Actuation Time	ms	250
Temperature Range	°C [°F]	5°~60° [41°~140°]
Power Requirement @ 100% duty cycle	W	4.2
Voltage	VDC	24
Current - Peak	amps	1.5 (max)
Current - Continuous	amps	0.175
Ingress Protection Class (IP)		IP54
Clean Room		1000 (Krytox)
Weight	kg [lbs]	0.53 [1.16]
Max Finger Length	mm [in]	76.2 [3.00]
Durability	cycles	20 Million

Loading Information

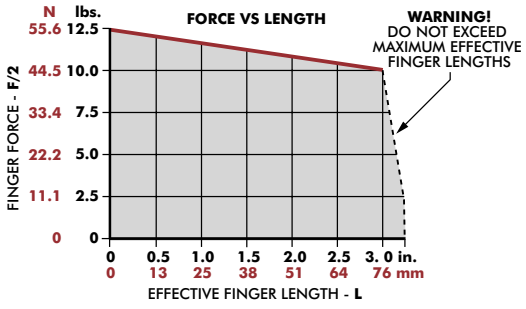

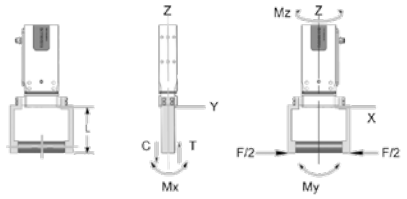

DPE-200-25	Static
Maximum Tensile **T**	10 N [75 lbs]
Maximum Compressive **C**	10 N [75 lbs]
Maximum Moment $\mathbf{M_x}$	14 Nm [120 in-lbs]
Maximum Moment $\mathbf{M_y}$	17 Nm [150 in-lbs]
Maximum Moment $\mathbf{M_z}$	14 Nm [120 in-lbs]

†Capacities are per set of jaws and are not simultaneous

RPE-100 LIGHT-DUTY

Electric Parallel Grippers | Features and Benefits | How To Order

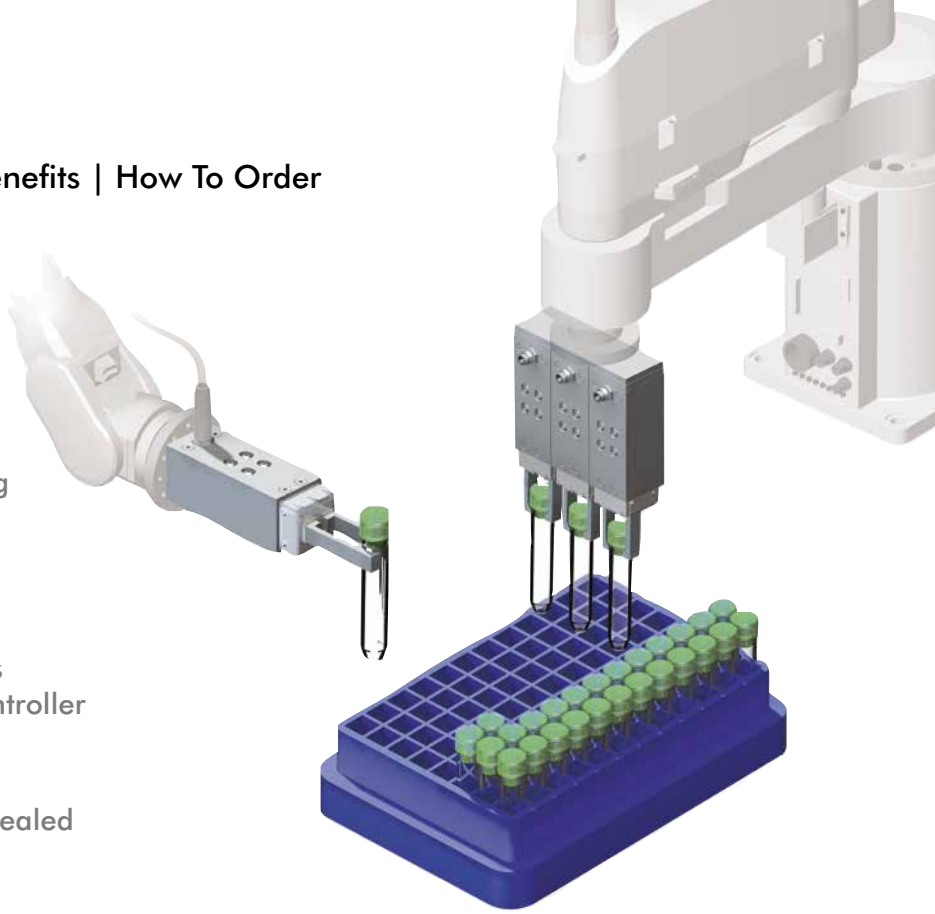

Features:

- Ideal for semiconductor and life sciences laboratory applications
- Compact design allows several units mounted closely together to grip multiple parts simultaneously
- Fully integrated electronics, no programming or software. Operates from PLC discrete open/close commands
- Fail-safe operation with spring closed maintains full grip force upon power loss
- No programming required. Gripper actuates using a 50ms discrete pulse from PLC or controller
- Minimized finger backlash and side play with low friction Dual-V bearing system
- Maintenance free internally lubricated and sealed
- Clean room 100 rated IP54

How To Order

Base Model
RPE

Gripping Orientation
100M Perpendicular to Connector
101M In-line to Connector

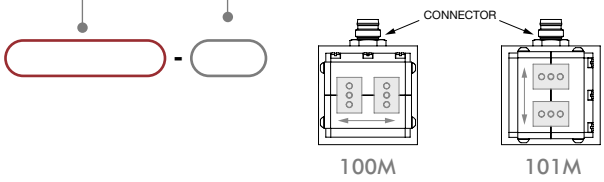

Accessories

Sensor Accessories	Part Number
Inductive Sensor Mounting Kit (Mounts 1 sensor)	OSMK-130
PNP Inductive Sensor with Quick Connect	OISP-019
NPN Inductive Sensor with Quick Connect	OISN-019
Quick Disconnect Sensor Cable, 2m long	CABL-010
Quick Disconnect Sensor Cable, 5m long	CABL-013

*Sensor and cable sold separately.

Electrical Interface: Pin Out

(Looking into the head of the connector on gripper)

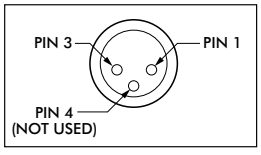

PIN ORIENTATION

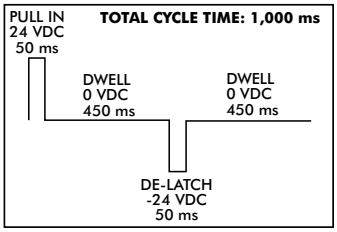

TIMING DIAGRAM

Dimensions and technical information are subject to change without notice

RPE-100 LIGHT-DUTY

Electric Parallel Grippers | Dimensions and Technical Specifications

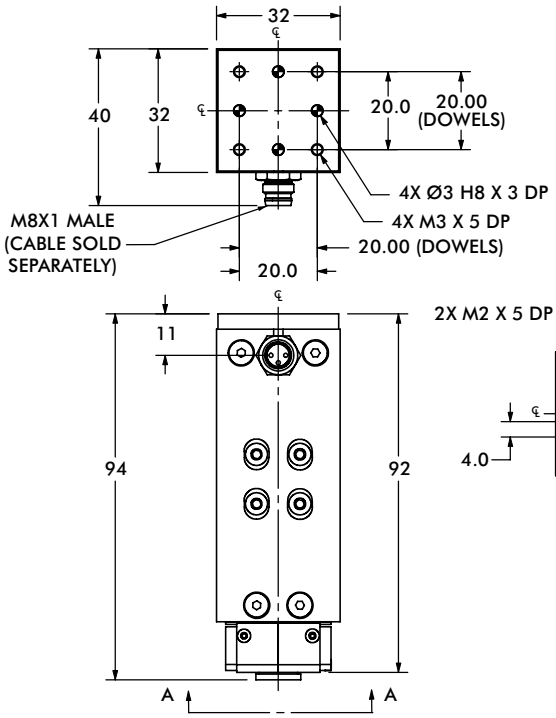



Shown with customer supplied fingers.

Specifications

Specifications	Units	RPE-100M/101M
Total Grip Force	N [lbf]	5 [1.1]
Stroke	mm [in]	4 [0.16]
Repeatability	mm [in]	±0.025 [0.001]
Accuracy	mm [in]	±0.051 [0.002]
Actuation Time	ms	100
Temperature Range	°C [°F]	5°~50° [40°~120°]
Power Requirement @ 100% duty cycle	W	40 (Peak)
Voltage	VDC	24
Current - Peak	amps	1.5 (max)
Current - Continuous	amps	0.175
Ingress Protection Class (IP)		IP54
Clean Room		100 (Krytox)
Weight	kg [lbs]	0.23 [0.50]
Max Finger Length	mm [in]	50 [1.90]
Durability	cycles	5 Million

Loading Information

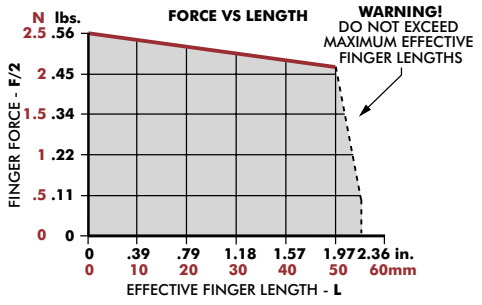

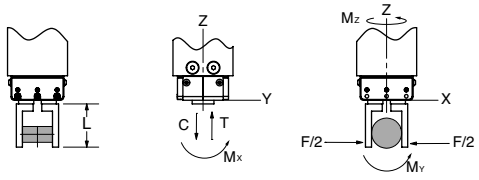

RPE-100, RPE-101	Static	Dynamic
Maximum Tensile **T**	59 N [13 lbs]	20 N [4.5 lbs]
Maximum Compressive **C**	59 N [13 lbs]	20 N [4.5 lbs]
Maximum Moment M_x	0.75 Nm [2.7 lbf-in]	0.3 Nm [6.6 lbf-in]
Maximum Moment M_y	1.2 Nm [10.6 lbf-in]	0.4 Nm [3.5 lbf-in]
Maximum Moment M_z	0.75 Nm [6.6 lbf-in]	1.1 Nm [9.7 lbf-in]

†Capacities are per set of jaws and are not simultaneous

PRECISION PARALLEL GRIPPERS

2-Jaw Parallel Grippers | Product Overview

Model		Stroke mm [in]	Grip Force N [lbs]	Operating Environment	Special Features	Page #
2P		10-50 [0.39-1.97]	432-11,475 [97-2579]	IP 54	Spring assist. Double force tandem cylinder option. Large choice of configurable options.	3
DGC		20-40 [0.79-1.57]	474-796 [106-179]	IP54 Using Purge Port	Rugged applications. Spring assist. DIRECTCONNECT	15
GC		50-60 [1.968-2.362]	1481-2318 [333-521]	IP54 Using Scavenge Port	Rugged applications. Spring assist.	15
DPL		40-140 [1.575-5.512]	618-2035 [138- 457]	IP54 Using Purge Port	Longest strokes in compact length. Long finger lengths. DIRECTCONNECT	23
DPP		6.35-50.8 [0.25-2]	111-934 [25-210]	IP43 Using Purge Port. Clean Room Class 10,000 ISO 7 Using Scavenge Port	Highest precision, low pressure applications. Zero side play with Dual-V bearing design. DIRECTCONNECT	33
RP-P		12.7-76.2 [0.5-3.0]	107-2224 [24-500]	IP33	Highest precision. Long finger lengths. Delicate parts handling.	39
RPL		6.4 -25.4 [0.25-1.0]	116-160 [26-36]	IP33	Low pressure applications, zero side play, Excellent repeatability, long finger lengths. Delicate parts Handling.	47
RPLC		6.4-25.4 [0.25-1.0]	116-160 [26-36]	IP64 Using Purge Port. Clean Room Class 10, ISO 4 Using Scavenge Port	Shielded for Clean or Harsh Environments. Low Pressure Applications, Zero Side Play. Excellent Repeatability	47

Dimensions and technical information are subject to change without notice

PRECISION PARALLEL GRIPPERS

2-Jaw Parallel Grippers | DIRECTCONNECT™ Modular Connectivity Chart

Modular DIRECTCONNECT Mounting Style Examples:

Products can be mounted in multiple positions. Refer to datasheet for complete info.

Slide to Gripper

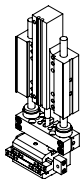

DLT Thruster Slide to DGC Parallel Gripper

Slide to Gripper

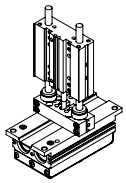

DLT Thruster Slide to DPL Parallel Gripper

Slide to Gripper

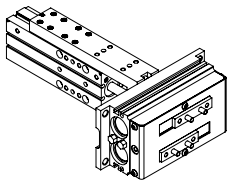

DLM Thruster Slide to DPL Parallel Gripper

Slide to Gripper

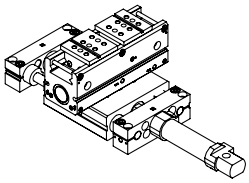

DLB Base Slide to DPP Parallel Gripper

Slide to Gripper

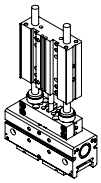

DLT Thruster Slide to DPP Parallel Gripper

Slide to Gripper

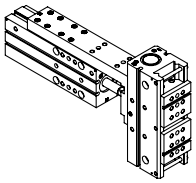

DLM Thruster Slide to DPP Parallel Gripper

DIRECTCONNECT™ Mounting Compatibility Chart

DESTACO's DIRECTCONNECT™ technology, allows all components of the system–grippers and slides—to be mounted together directly. Look for matching icons on product datasheets for mounting compatibility.

Note: The numbers in the cell represent the metric screw size and basic mounting pattern.
S=Square, R=Rectangle. ie; 5S = M5 Screw with square mounting pattern.

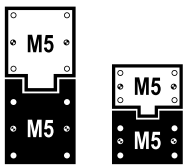

5S 5R

Catalog Models		2 Jaw Precision Parallel Grippers					
		DGC	DPL-25XX	DPL-32XX, 40XX	DPP-10 &14	DPP-20	DPP-28
Base Slides	DLB-06,08				3R		
	DLB-10,12,16	5R	5R			5R	5R
	DLB-20,25			10R			10R
Thruster Slides	DLT-06,08				3R		
	DLT-10,12,16	5R	5R		3R	5R	5R
	DLT-20,25	5R	5R	10R		5R	10R
	DLM-07				3R		
	DLM-9,12	5R	5R		3R	5R	5R

2P SERIES

2-Jaw Precision Parallel Grippers | Features and Benefits | How To Order

Features:

- Robust and powerful precision multi-purpose gripper
- Pneumatic or hydraulic powered operation
- Optional tandem cylinder doubles grip force
- Protective boot and shielded design for harsh environments
- Spring assist option maintains grip in case of air pressure loss

Applications:

- Hydraulic powered gripping applications
- Confined spaces in harsh environment applications
- Welding applications with protective boot option



How To Order

Base Model
- **6002P**
- **8002P**
- **11002P**
- **14002P**
- **16502P**
- **16502PGR**

Spring — Description
- "Blank" — No Spring
- **RE** — External Gripping
- **RI** — Internal Gripping

Sensor Unit — Description
- "Blank" — No Sensors
- **KT1**, **KT2**, **KX1**, **KX2** — Integral Sensor (See page GR-PPC-12 for detection zones and mounting positions)

Tandem Cylinder — Description
- "Blank" — No Cylinder
- **M** — For Use with Pneumatic Power only

Power — Description
- **P** — Pneumatic
- **H** — Hydraulic

Target Flag — Description
- "Blank" — No Target Flag
- **T** — Sensor Target Flag

Inductive Sensor Mount — Description
- "Blank" — No Sensor Mount
- **SD** — Inductive Sensor Mount

Stroke — Description
- "Blank" — Standard Stoke
- **C** — Extended Stroke

Protective Boot — Description
- "Blank" — None
- **E** — PVC Boot
- **E3** — Fireproof Kevlar Boot

Seals — Description
- "Blank" — Buna-N
- **V** — Viton® High Temperature

Accessories

Sensor Accessories	Model Numbers	Part Number	Qty/Unit
M8 Inductive Sensor PNP with M8 Connector	6002P, 8002P, 11002P	OISP-011	1-4
M8 Inductive Sensor NPN with M8 Connector	6002P, 8002P, 11002P	OISN-011	1-4
M8 Inductive Sensor PNP with M12 Connector	14002P, 16502P	OISP-017	1-4
M8 Inductive Sensor NPN with M12 Connector	14002P, 16502P	OISN-017	1-4
M8 Quick Disconnect 2 Meter Cable Length*	6002P, 8002P, 11002P	CABL-010	1-4
M12 Quick Disconnect 2 Meter Cable Length*	14002P, 16502P	CABL-014	1-4
Inductive Sensor Mounting Kit (1 holder + 1 flag)	6002P, 8002P	SD60-80P	1-2
Inductive Sensor Mounting Kit (1 holder + 1 flag)	11002P	SD110P	1-2
Inductive Sensor Mounting Kit (1 holder + 1 flag)	14002P	OSMK-114	1-2
Inductive Sensor Mounting Kit (1 holder + 1 flag)	16502P	OSMK-115	1-2

*Sensor and cable sold separately.

2-Jaw Precision Parallel Grippers | Technical Specifications

Specifications	Units	6002P-P	6002P-P-C	8002P-P	8002P-P-C	11002P-P	11002P-P-C
Grip Force (F6+R)1, 6 bar [87 psi], Springs Mid-Way, L=0	N [lb]	694 [156]	432 [97]	1946 [437]	1256 [282]	3043 [684]	2030 [456]
Grip Force (F0+R)2, 0 bars, Springs Mid-Way, L=0	N [lb]	176 [40]	109 [24]	635 [143]	410 [92]	965 [217]	644 [145]
Total Stroke	mm [in]	10 [0.39]	16 [0.63]	13 [0.51]	20 [0.79]	20 [0.79]	30 [1.18]
Weight	kg [lbs]	0.51 [1.12]		0.84 [1.85]		2.04 [4.50]	
Pressure Range w/o Spring	bar [psi]	2-7 [30-100]					
Pressure Range with Spring	bar [psi]	4-7 [60-100]					
Ingress Protection Class (IP)		IP54					
Displacement	cm^3 [in^3]	12 [0.73]		35 [2.14]		87 [5.31]	
Temperature Range (Buna-N seals)	°C [°F]	-35°~80° [-30°~180°]					
Temperature Range (Viton® seals)	°C [°F]	-30°~150° [-20°~300°]					
Actuation (open/close)	sec	0.07		0.08		0.10	
Repeatability	mm [in]	±0.02 [±0.001]					

Specifications	Units	14002P-P	14002P-P-C	16502P-P	16502P-P-C	1650PGR-P
Grip Force (F6+R)1, 6 bar [87 psi], Springs Mid-Way, L=0	N [lb]	6232 [1400]	4031 [906]	11475 [2579]	6878 [1546]	11475 [2579]
Grip Force (F0+R)2, 0 bars, Springs Mid-Way, L=0	N [lb]	2305 [518]	1490 [335]	3825 [860]	2292 [515]	3825 [860]
Total Stroke	mm [in]	26 [1.02]	40 [1.57]	30 [1.18]	50 [1.97]	30 [1.18]
Weight	kg [lbs]	4.2 [9.26]		8.74 [19.26]		2.04 [4.50]
Pressure Range w/o Spring	bar [psi]	2-7 Bar [30-100 psi]				
Pressure Range with Spring	bar [psi]	4-7 Bar [60-100 psi]				
Ingress Protection Class (IP)		IP54				
Displacement	cm^3 [in^3]	220 [13.43]		494 [30.15]		494 [30.15]
Temperature Range (Buna-N seals)	°C [°F]	-35°~80° [-30°~180°]				
Temperature Range (Viton® seals)	°C [°F]	-30°~150° [-20°~300°]				
Actuation (open/close)	sec	0.16		0.29		0.29
Repeatability		±0.02 [±0.001]				

6002P, 6002P-C

2-Jaw Precision Parallel Grippers | Dimensions and Technical Specifications

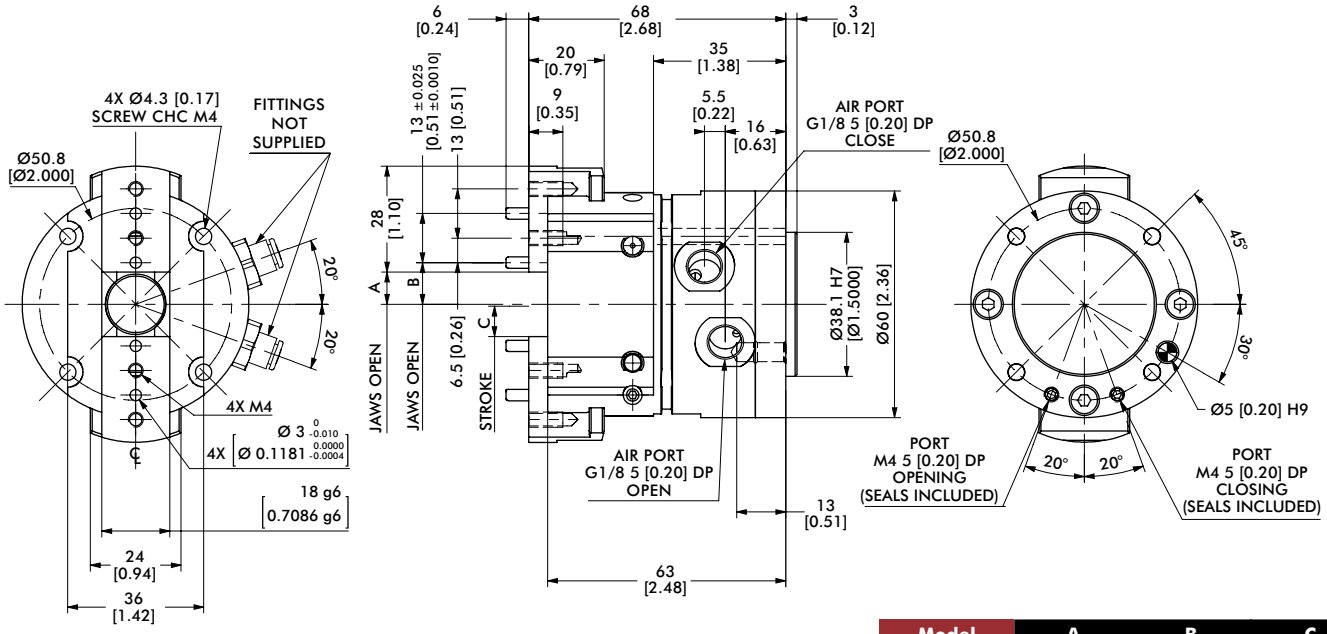

OUR GRIPPERS ARE SUPPLIED WITH OPEN SIDE AIR PORTS AND TOP AIR PORTS PLUGGED. WHEN OPERATING TOP AIR PORTS, PRODUCES MANIFOLD SEALING AS SHOWN.

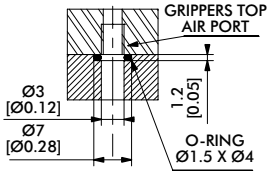

mm [INCH]

THIRD ANGLE PROJECTION

Model	A	B	C
6002P	5.5 [0.22]	8 [0.31]	5 [0.20]
6002P-C	8.5 [0.33]	11 [0.43]	8 [0.31]

Dimensions in mm [in]

Protective Boots	6002P
PVC Protective Boot, Brown or Black	ER62P
Fireproof KEVLAR Protective Boot, Red	E3R62P

Seal Repair Kits	6002P
Buna-N Seal Repair Kit	SLKT-156
Viton® Seal Repair Kit	SLKT-156V
Hydraulic Seal Repair Kit	SLKT-330

Loading Information

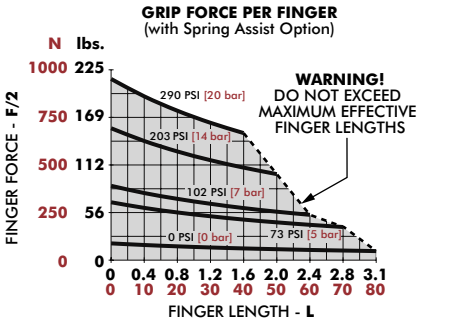

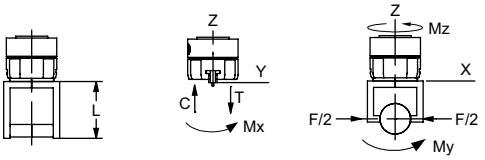

6002P	Static	Dynamic
Maximum Tensile **T**	410 N [92 lbs]	95 N [21 lbs]
Maximum Compressive **C**	780 N [175 lbs]	95 N [21 lbs]
Maximum Moment M_x	21 Nm [186 in-lbs]	3 Nm [27 in-lbs]
Maximum Moment M_y	16 Nm [142 in-lbs]	3 Nm [27 in-lbs]
Maximum Moment M_z	[239 in-lbs] 27 Nm	3 Nm [27 in-lbs]

†Capacities are per set of jaws and are not simultaneous

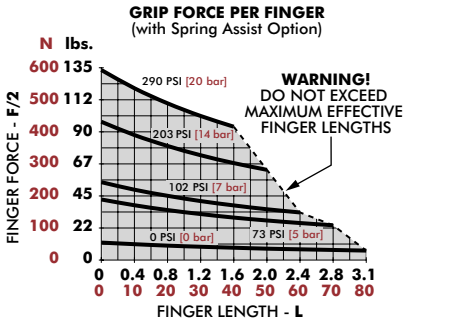

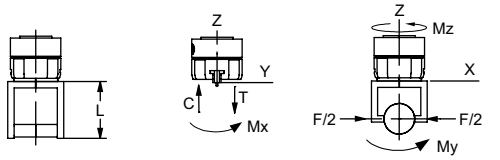

6002P-C	Static	Dynamic
Maximum Tensile **T**	546 N [123 lbs]	140 N [31 lbs]
Maximum Compressive **C**	1037 N [233 lbs]	140 N [31 lbs]
Maximum Moment M_x	28 Nm [248 in-lbs]	4 Nm [35 in-lbs]
Maximum Moment M_y	22 Nm [195 in-lbs]	4 Nm [35 in-lbs]
Maximum Moment M_z	36 Nm [319 in-lbs]	4 Nm [35 in-lbs]

†Capacities are per set of jaws and are not simultaneous

8002P, 8002P-C

2-Jaw Precision Parallel Grippers | Dimensions and Technical Specifications

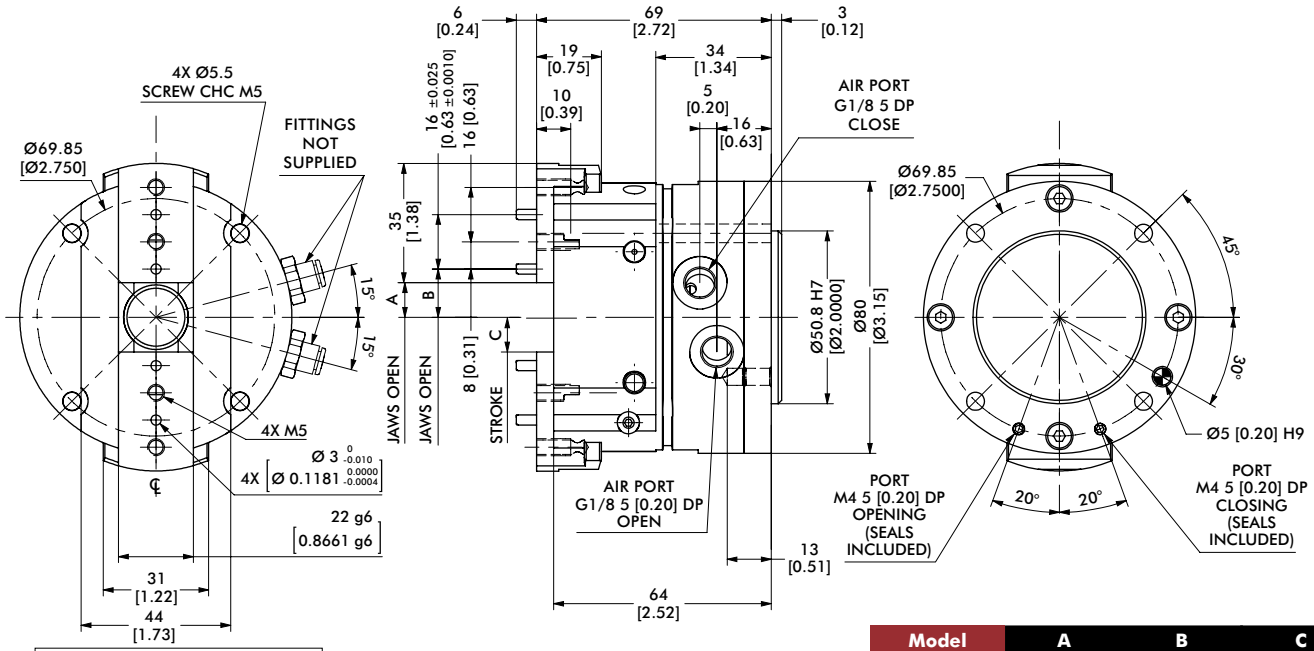

OUR GRIPPERS ARE SUPPLIED WITH OPEN SIDE AIR PORTS AND TOP AIR PORTS PLUGGED. WHEN OPERATING TOP AIR PORTS, PRODUCES MANIFOLD SEALING AS SHOWN.

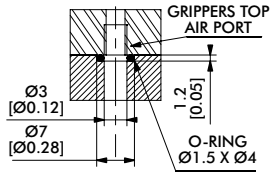

mm [INCH]

THIRD ANGLE PROJECTION

Model	A	B	C
8002P	6.8 [0.27]	10.8 [0.43]	6.5 [0.26]
8002P-C	10.2 [0.40]	14.2 [0.56]	10 [0.39]

Dimensions in mm [in]

Protective Boots	8002P
PVC Protective Boot, Brown or Black	ER82P
Fireproof KEVLAR Protective Boot, Red	E3R82P

Seal Repair Kits	8002P
Buna-N Seal Repair Kit	S80
Viton® Seal Repair Kit	S80V
Hydraulic Seal Repair Kit	S80H

Loading Information

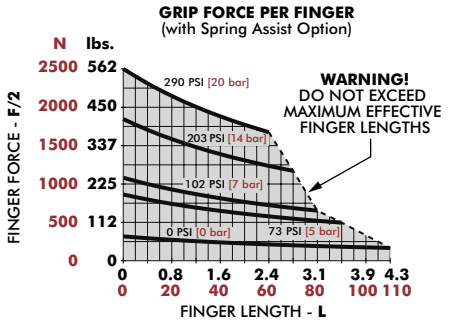

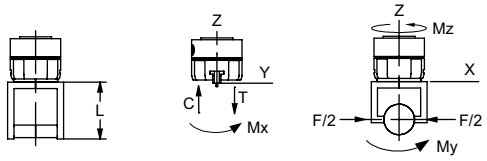

8002P	Static	Dynamic
Maximum Tensile **T**	819 N [184 lbs]	348 N [78 lbs]
Maximum Compressive **C**	1383 N [311 lbs]	348 N [78 lbs]
Maximum Moment M_X	40 Nm [354 in-lbs]	13 Nm [115 in-lbs]
Maximum Moment M_Y	45 Nm [398 in-lbs]	15 Nm [133 in-lbs]
Maximum Moment M_Z	25 Nm [221in-lbs]	15 Nm [133 in-lbs]

†Capacities are per set of jaws and are not simultaneous

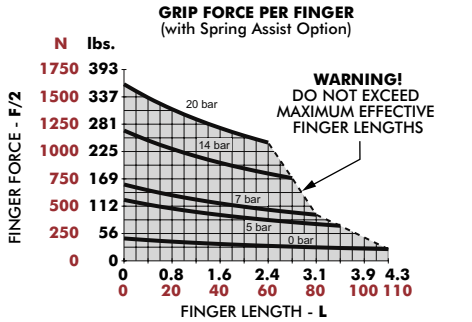

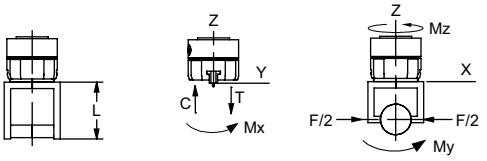

8002P-C	Static	Dynamic
Maximum Tensile **T**	615 N [138 lbs]	236 N [53 lbs]
Maximum Compressive **C**	1040 N [234 lbs]	236 N [53 lbs]
Maximum Moment M_X	30 Nm [266 in-lbs]	9 Nm [80 in-lbs]
Maximum Moment M_Y	33 Nm [292 in-lbs]	10 Nm [89 in-lbs]
Maximum Moment M_Z	18 Nm [159 in-lbs]	10 Nm [89 in-lbs]

†Capacities are per set of jaws and are not simultaneous

11002P, 11002P-C

2-Jaw Precision Parallel Grippers | Dimensions and Technical Specifications

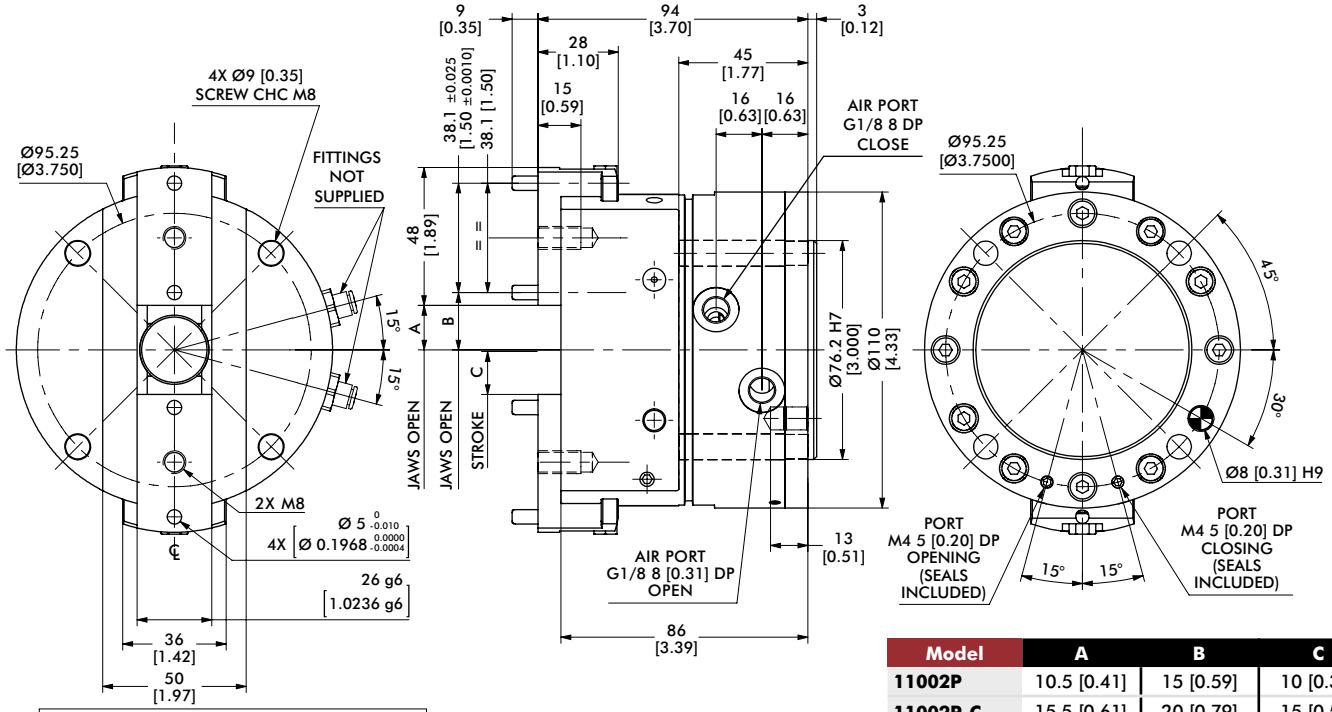

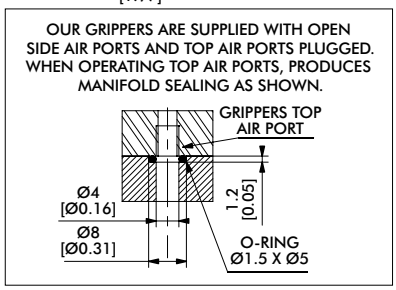

mm [INCH]

THIRD ANGLE PROJECTION

Model	A	B	C
11002P	10.5 [0.41]	15 [0.59]	10 [0.39]
11002P-C	15.5 [0.61]	20 [0.79]	15 [0.59]

Dimensions in mm [in]

Protective Boots	11002P
PVC Protective Boot, Brown or Black	ER112P
Fireproof KEVLAR Protective Boot, Red	E3R112P

Seal Repair Kits	11002P
Buna-N Seal Repair Kit	S110
Viton® Seal Repair Kit	S110V
Hydraulic Seal Repair Kit	S110H

Loading Information

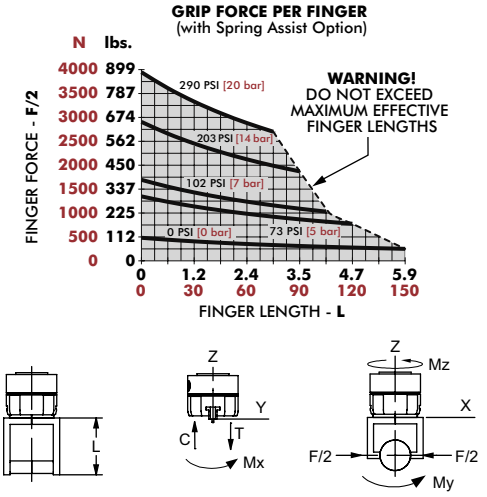

11002P	Static	Dynamic
Maximum Tensile **T**	1040 N [234 lbs]	556 N [125 lbs]
Maximum Compressive **C**	1768 N [397 lbs]	556 N [125 lbs]
Maximum Moment M_x	39 Nm [345 in-lbs]	25 Nm [221 in-lbs]
Maximum Moment M_y	53 Nm [469 in-lbs]	33 Nm [292 in-lbs]
Maximum Moment M_z	63 Nm [558 in-lbs]	33 Nm [292 in-lbs]

†Capacities are per set of jaws and are not simultaneous

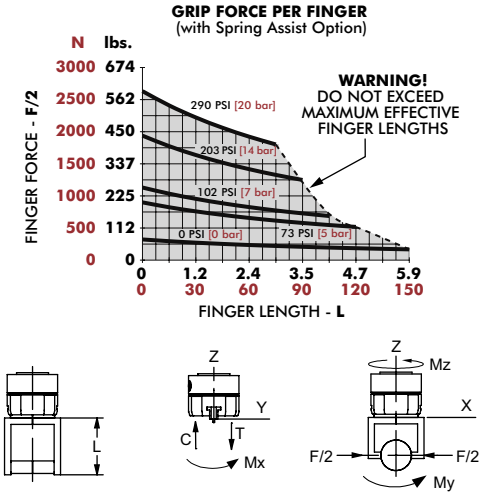

11002P-C	Static	Dynamic
Maximum Tensile **T**	945 N [212 lbs]	370 N [83 lbs]
Maximum Compressive **C**	1607 N [361 lbs]	370 N [83 lbs]
Maximum Moment M_x	35 Nm [310 in-lbs]	18 Nm [159 in-lbs]
Maximum Moment M_y	47 Nm [416 in-lbs]	24 Nm [212 in-lbs]
Maximum Moment M_z	56 Nm [496 in-lbs]	24 Nm [212 in-lbs]

†Capacities are per set of jaws and are not simultaneous

Dimensions and technical information are subject to change without notice

14002P, 14002P-C

2-Jaw Precision Parallel Grippers | Dimensions and Technical Specifications

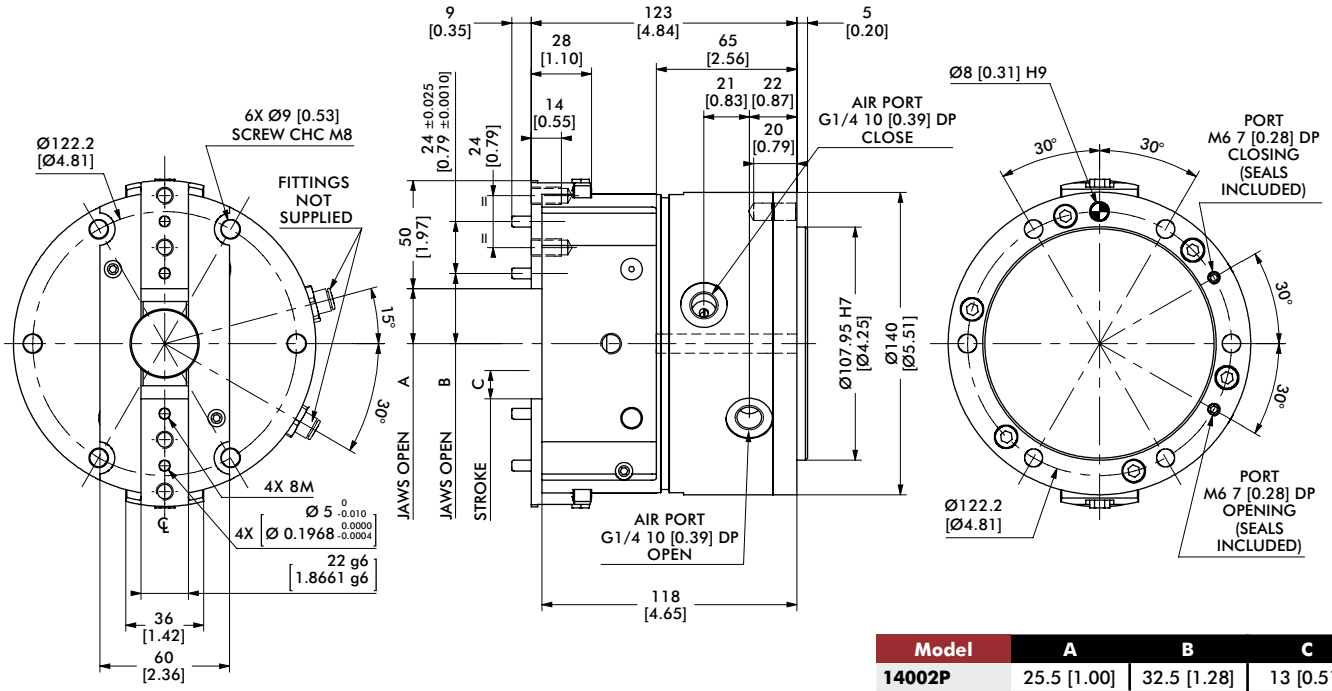

Model	A	B	C
14002P	25.5 [1.00]	32.5 [1.28]	13 [0.51]
14002P-C	32.5 [1.28]	39.5 [1.56]	20 [0.79]

Dimensions in mm [in]

OUR GRIPPERS ARE SUPPLIED WITH OPEN SIDE AIR PORTS AND TOP AIR PORTS PLUGGED. WHEN OPERATING TOP AIR PORTS, PRODUCES MANIFOLD SEALING AS SHOWN.

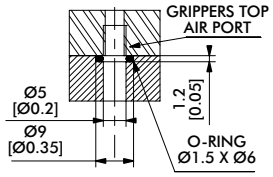

mm [INCH]

THIRD ANGLE PROJECTION

Protective Boots	14002P
PVC Protective Boot, Brown or Black	KP-311
Fireproof KEVLAR Protective Boot, Red	KP-313

Seal Repair Kits	14002P
Buna-N Seal Repair Kit	SLKT-333
Viton® Seal Repair Kit	SLKT-333V
Hydraulic Seal Repair Kit	SLKT-334

Loading Information

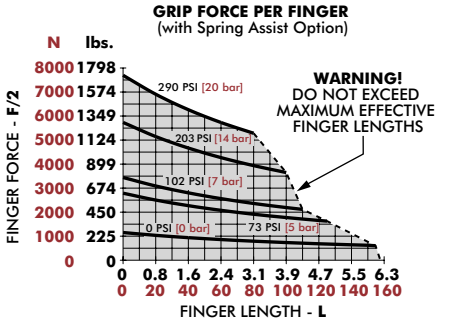

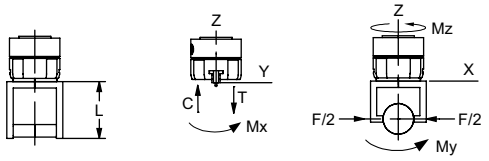

14002P	Static	Dynamic
Maximum Tensile **T**	1600 N [360 lbs]	550 N [124 lbs]
Maximum Compressive **C**	1820 N [409 lbs]	550 N [124 lbs]
Maximum Moment M_X	55 Nm [487 in-lbs]	18 Nm [159 in-lbs]
Maximum Moment M_Y	90 Nm [797 in-lbs]	30 Nm [266 in-lbs]
Maximum Moment M_Z	90 Nm [797 in-lbs]	30 Nm [266 in-lbs]

†Capacities are per set of jaws and are not simultaneous

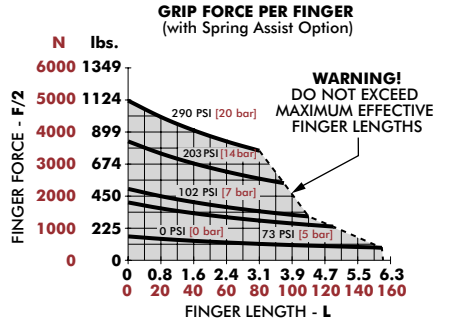

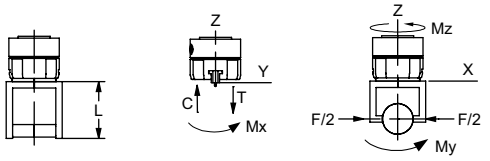

14002P-C	Static	Dynamic
Maximum Tensile **T**	1450 N [326 lbs]	400 N [90 lbs]
Maximum Compressive **C**	1450 N [326 lbs]	400 N [90 lbs]
Maximum Moment M_X	50 Nm [443 in-lbs]	15 Nm [133 in-lbs]
Maximum Moment M_Y	75 Nm [664 in-lbs]	25 Nm [221 in-lbs]
Maximum Moment M_Z	75 Nm [664 in-lbs]	25 Nm [221 in-lbs]

†Capacities are per set of jaws and are not simultaneous

16502P, 16502P-C

2-Jaw Precision Parallel Grippers | Dimensions and Technical Specifications

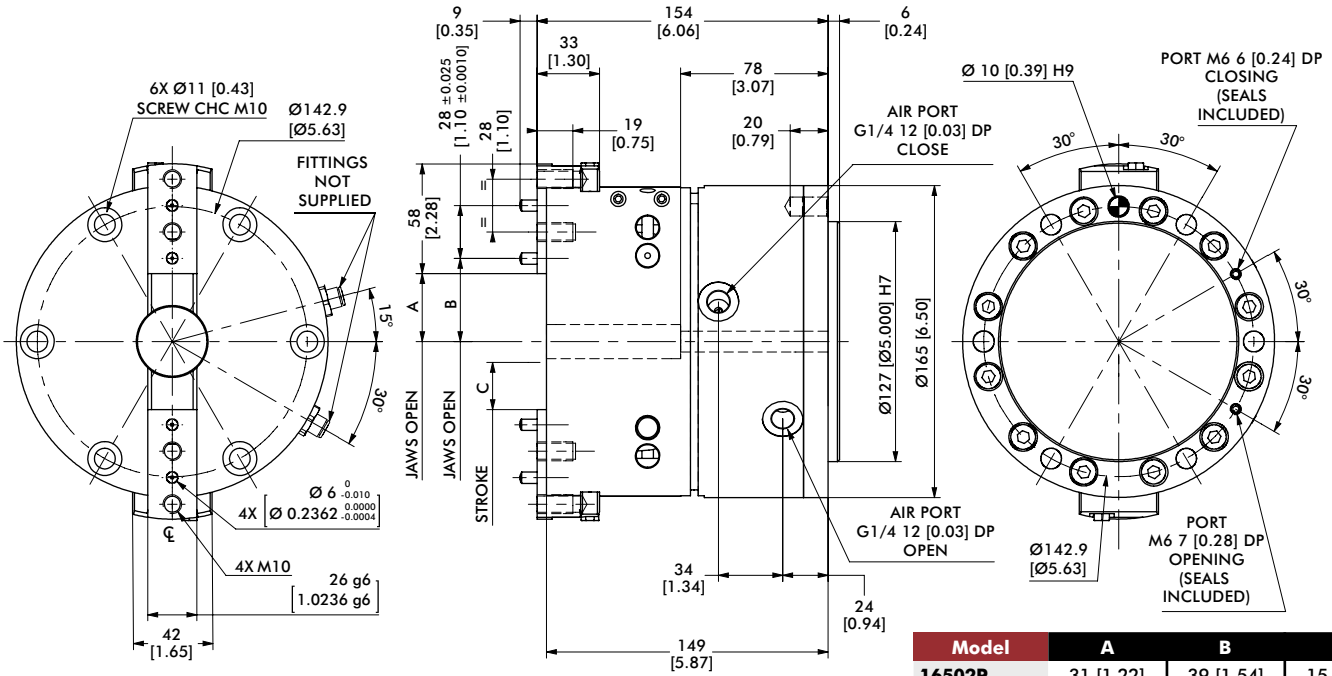

OUR GRIPPERS ARE SUPPLIED WITH OPEN SIDE AIR PORTS AND TOP AIR PORTS PLUGGED. WHEN OPERATING TOP AIR PORTS, PRODUCES MANIFOLD SEALING AS SHOWN.

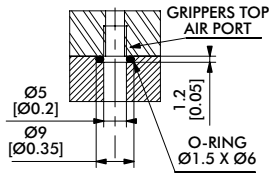

mm [INCH]

THIRD ANGLE PROJECTION

Model	A	B	C
16502P	31 [1.22]	39 [1.54]	15 [0.59]
16502P-C	36 [1.42]	44 [1.73]	25 [0.98]

Dimensions in mm [in]

Protective Boots	16502P
PVC Protective Boot, Brown or Black	KP-314
Fireproof KEVLAR Protective Boot, Red	KP-316

Seal Repair Kits	16502P
Buna-N Seal Repair Kit	SLKT-335
Viton® Seal Repair Kit	SLKT-335V
Hydraulic Seal Repair Kit	SLKT-336

Loading Information

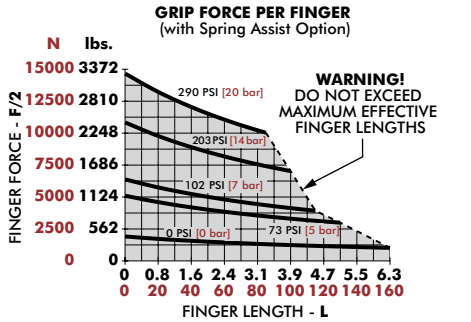

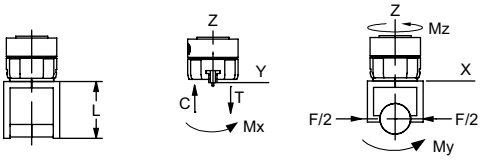

16502P	Static	Dynamic
Maximum Tensile **T**	1720 N [387 lbs]	650 N [146 lbs]
Maximum Compressive **C**	2160 N [485 lbs]	650 N [146 lbs]
Maximum Moment M_x	70 Nm [620 in-lbs]	17 Nm [150 in-lbs]
Maximum Moment M_y	100 Nm [885 in-lbs]	30 Nm [266 in-lbs]
Maximum Moment M_z	100 Nm [885 in-lbs]	30 Nm [266 in-lbs]

†Capacities are per set of jaws and are not simultaneous

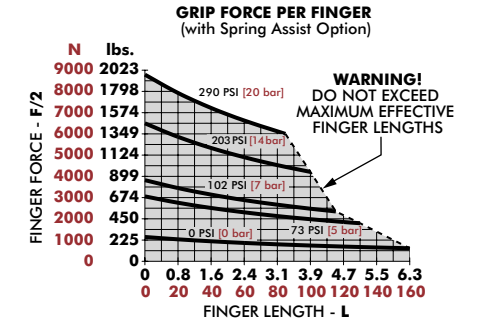

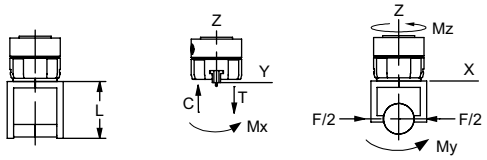

16502P-C	Static	Dynamic
Maximum Tensile **T**	1550 N [348 lbs]	580 N [130 lbs]
Maximum Compressive **C**	1950 N [438 lbs]	580 N [130 lbs]
Maximum Moment M_x	60 Nm [531 in-lbs]	20 Nm [177 in-lbs]
Maximum Moment M_y	80 Nm [708 in-lbs]	25 Nm [221 in-lbs]
Maximum Moment M_z	90 Nm [797 in-lbs]	25 Nm [221in-lbs]

†Capacities are per set of jaws and are not simultaneous

Dimensions and technical information are subject to change without notice

2-Jaw Precision Parallel Grippers | Dimensions and Technical Specifications

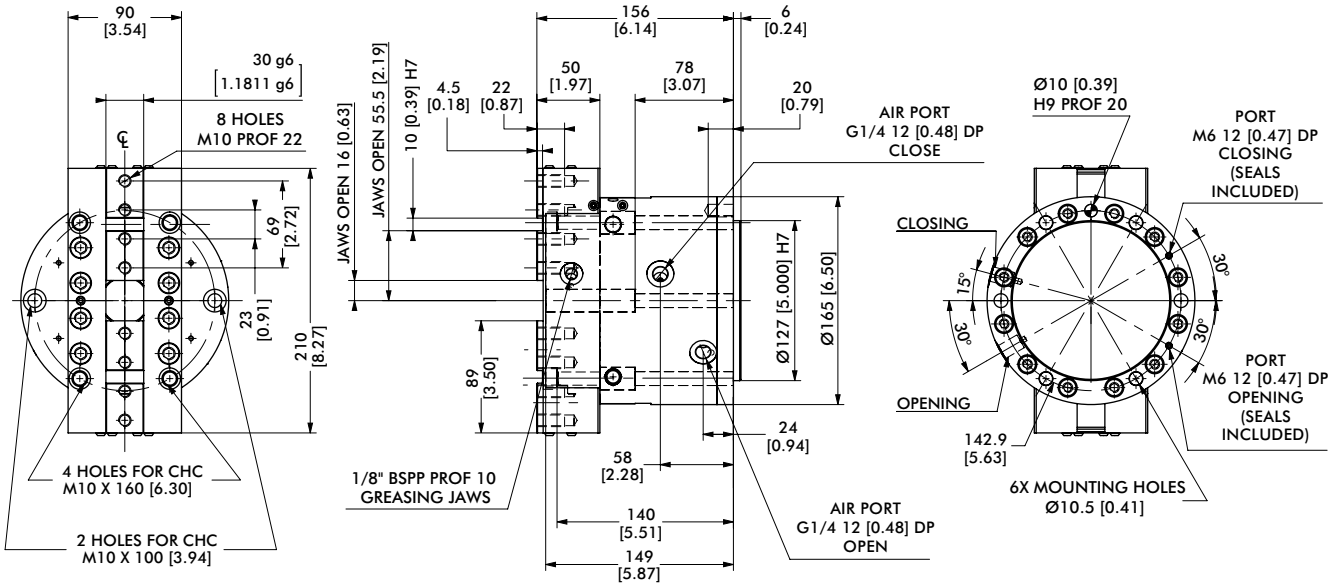

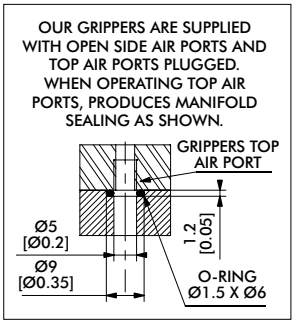

mm [INCH]

THIRD ANGLE PROJECTION

Protective Boots	16502PGR
Fireproof KEVLAR Protective Boot, Red	KENVE2-21384

Seal Repair Kits	16502PGR
Buna-N Seal Repair Kit	SLKT-335
Viton® Seal Repair Kit	SLKT-335V
Hydraulic Seal Repair Kit	SLKT-336

Loading Information

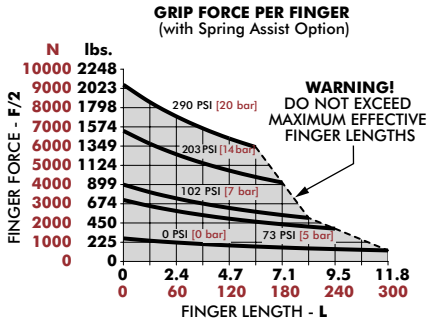

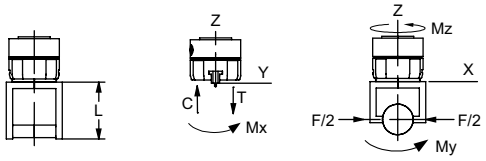

16502PGR	Static
Maximum Tensile **T**	5200 N [1169 lbs]
Maximum Compressive **C**	6400 N [1438 lbs]
Maximum Moment M_X	270 Nm [2390 in-lbs]
Maximum Moment M_Y	350 Nm [3098 in-lbs]
Maximum Moment M_Z	300 Nm [2655 in-lbs]

†Capacities are per set of jaws and are not simultaneous

2P OPTIONS & ACCESSORIES

2-Jaw Parallel Grippers | Dimensions and Technical Specifications

SUPPLY: (P) Pneumatic (H) Hydraulic

As standard, the clamp is supplied with air to a pressure of 7 bar. On request (contact us) the gripper can be supplied with hydraulic fluid. The clamp is fitted with seals Viton Quad-Ring.

- Choice **(H)** allows a hydraulic power to a pressure of 20 bar max. In this case the overall dimensions do not change. For better security the gripper must be fixed on their support before being fired. **CAUTION: Hydraulic cycle times are longer.**

The hydraulic power is incompatible with the option tandem (M).

Option (RE) or (RI): Spring Assist

The internal springs of the gripper ensures grip force is maintained by retaining the component during pressure loss, to increase the gripforce, or allows the usage of the gripper in single acting operation.

Option **(RE)** for external gripping. Option **(RI)** for internal gripping.

The (RE) is incompatible with the option (RI).

Option (T): Sensor Rod

Option **(T)** is a steel rod which comes out on the rear side of the gripper. The rod is fixed with the piston and has the same stroke movement. The open end of the rod allows for mounting a cam which allows to control the position of the jaws by using inductive sensors, micro switches,etc

WARNING: when screwing on cam rod, make sure the sensor rod does not rotate to prevent twisting of the springs of options **(RE)** or **(RI)**.

Option (T) is incompatible with option (K).

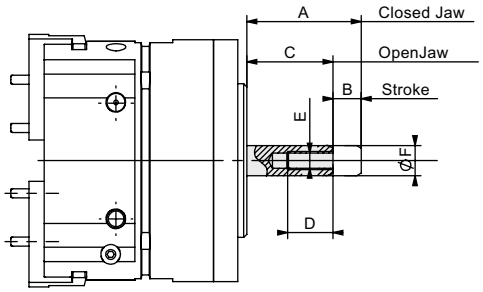

Model	A	B	C	D	E	F
6002P & 6002P-C	35	5	30	15	M6	10
8002P & 8002P-C	35	6.5	28.5	15	M6	10
11002P & 11002P-C	35	10	25	15	M6	15
14002P & 14002P-C	55	13	42	20	M8	15
16502P & 16502P-C	53	23	30	20	M8	15

Option (M): Tandem Cylinder

The **(M)** is a cylinder light-alloy that fits behind the bottom plate. This actuator's integral action allows to double the gripforce by using the same pressure. The combination of tandem option tandem **(M)** and Option **(RE)** or **(RI)** can double the clamping forces of the spring assist option. For cycle times of the tandem option, apply a factor of 3 to the actuation time.

The (M) is incompatible with the option (H).

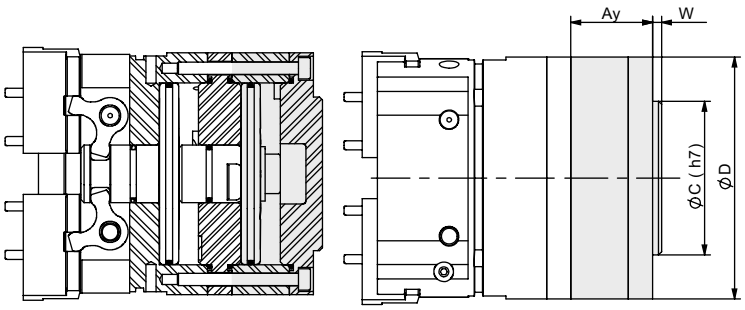

Model	Ay	ØC	ØD	W	Weight (kg)
6002P & 6002P-C	28.5	38.1	60	3	0.200
8002P & 8002P-C	27	50.8	80	3	0.300
11002P & 11002P-C	34	76.2	110	3	0.750
14002P & 14002P-C	49	107.95	140	5	2.100
16502P & 16502P-C	65	127	165	6	3.600

Option (KT1), (KX1), (KT2), (KX2): Sensor Unit

The **(K)** is a lightweight alloy housing that fits on the back of the gripper. An integrated shaft follows the movement of the piston to provide information to the sensor attached to the side of the unit. It can control two positions of the grippers jaws. 2 types of inductive sensors **(KT, KX)** and 2 detection zones **(1, 2)** are possible to allow for the combination of 2 to 4 possible positions **(KT1, KX1, KT2, KX2)**. For **KT, KX** sensor specifications.

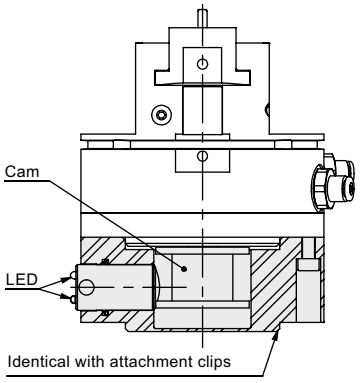

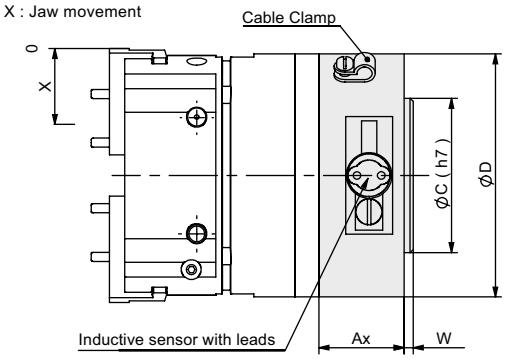

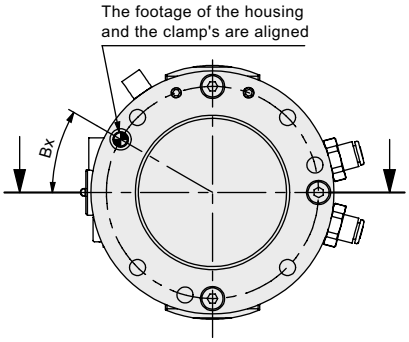

Model	Ax	Bx	ØC	ØD	W	Weight (k(g)	No. of Sensing Postions (please specify when ordering)	Information area from the open grip position (green LED) X (mm)	Area information relative to the closed grip position (yellow LED) X (mm)
6002P	23	30°	38.1	60	3	0.180	1	0 or 1 $^{+0,5}_{-0}$	4 $^{+0,5}_{-0}$ or 5
							2	0 or 2 $^{+0,5}_{-0}$	3 $^{+0,5}_{-0}$ or 5
6002P-C	23	30°	38.1	60	3	0.180	1	0 or 1.6 $^{+0,8}_{-0}$	7 $^{+0,8}_{-0}$ or 8
							2	0 or 3.2 $^{+0,8}_{-0}$	4.8 $^{+0,8}_{-0}$ or 8
8002P	28	30°	50.8	80	3	0.400	1	0 or 1 $^{+0,5}_{-0}$	5.5 $^{+0,5}_{-0}$ or 6,5
							2	0 or 2 $^{+0,5}_{-0}$	4.5 $^{+0,5}_{-0}$ or 6,5
8002P-C	28	30°	50.8	80	3	0.400	1	0 or 1.5 $^{+0,8}_{-0}$	8.5 $^{+0,8}_{-0}$ or 10
							2	0 or 3.1 $^{+0,8}_{-0}$	6.9 $^{+0,8}_{-0}$ or 10
11002P	36	30°	76.2	110	3	0.900	1	0 or 1 $^{+0,5}_{-0}$	9 $^{+0,5}_{-0}$ or 10
							2	0 or 3 $^{+0,5}_{-0}$	7 $^{+0,5}_{-0}$ or 10
11002P-C	36	30°	76.2	110	3	0.900	1	0 or 1.5 $^{+0,8}_{-0}$	13.5 $^{+0,8}_{-0}$ or 15
							2	0 or 4.5 $^{+0,8}_{-0}$	10.5 $^{+0,8}_{-0}$ or 15
14002P	45.5	165°	107.95	140	5	1.670	1	0 or 2 $^{+0,5}_{-0}$	11 $^{+0,5}_{-0}$ or 13
							2	0 or 4 $^{+0,5}_{-0}$	9 $^{+0,5}_{-0}$ or 13
14002P-C	45.5	165°	107.95	140	5	1.670	1	0 or 3 $^{+0,8}_{-0}$	17 $^{+0,8}_{-0}$ or 20
							2	0 or 6.2 $^{+0,8}_{-0}$	13.8 $^{+0,8}_{-0}$ or 20
16002P	65.5	165°	127	165	6	2.670	1	0 or 2 $^{+0,5}_{-0}$	13 $^{+0,5}_{-0}$ or 15
							2	0 or 4 $^{+0,5}_{-0}$	11 $^{+0,5}_{-0}$ or 15
16002P-C	65.5	165°	127	165	6	2.670	1	0 or 3.3 $^{+0,8}_{-0}$	21.7 $^{+0,8}_{-0}$ or 25
							2	0 or 7 $^{+0,8}_{-0}$	18 $^{+0,8}_{-0}$ or 25

2P OPTIONS & ACCESSORIES

2-Jaw Parallel Grippers | Dimensions and Technical Specifications

Option (V): Viton® Seals

Gripper with Viton® seals allows for use in high temperature environments [-30 ° C or 150 ° C].

Accessory (E): Protective Boot

The accessory **(E)** is a protective boot that fits over the gripper. It protects the mechanism and thus improves the life of the gripper in hostile environments. The accessory **(E)** causes a different location of the fingers on the jaws as compared to the standard installation. Before attaching the boot, perform the following steps:

1. Mount gripper to machine.
2. Slip boot over gripper and secure in place.
3. Attached fingers to jaws using finger adapter.

Depending on the environment 2 types of envelopes are available:

(E) Envelope of black or brown PVC for environmental grinding with emery presence.

(E3) red envelope containing KEVLAR fireproof silicone environment for hot chips and weld spatter.

The accessory (E) is incompatible with the accessory (SD)

Model Code	Order #	Model	A	B	C	D	E	F	G	H	J	K	S	T	TX	V	Y
E	ER62P	6002P & 6002P-C	88	98	35	13.5	8	29	29	17.5	13	–	3	M4	9	13	6
E3	E3R62P																
E	ER82P	8002P & 8002P-C	89	110	34	13.5	10	33	30	22.3	16	–	3	M5	10	16	6
E3	E3R82P																
E	ER112P	11002P & 11002P-C	See Drawing														
E3	E3R112P																
E	KP-311	14002P & 14002P-C	143	185	50	18	12	55	34	19.5	24	18	5	M8	14	–	8
E3	KP-313																
E	KP-314	16002P & 16002P-C	172	220	70	16	14	67	37	24 19	28	23	6	M10	19	–	8
E3	KP-316																

6002P & 8002P

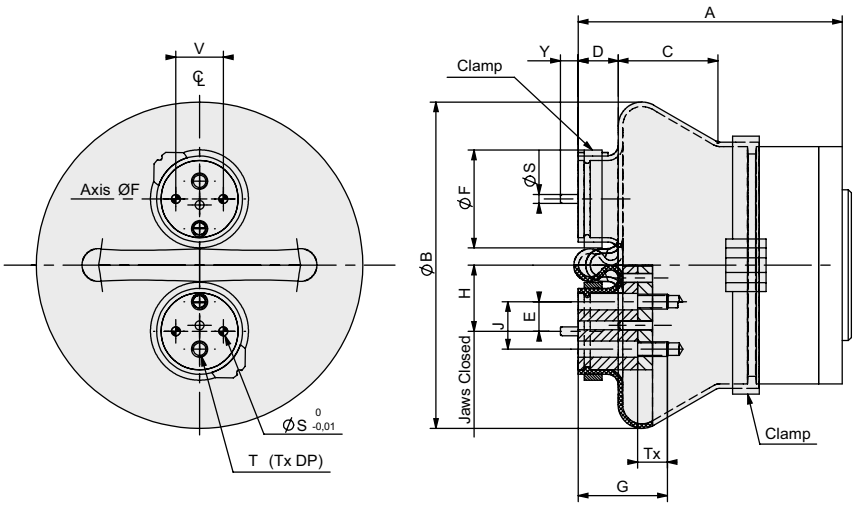

Dimensions and technical information are subject to change without notice

11002P

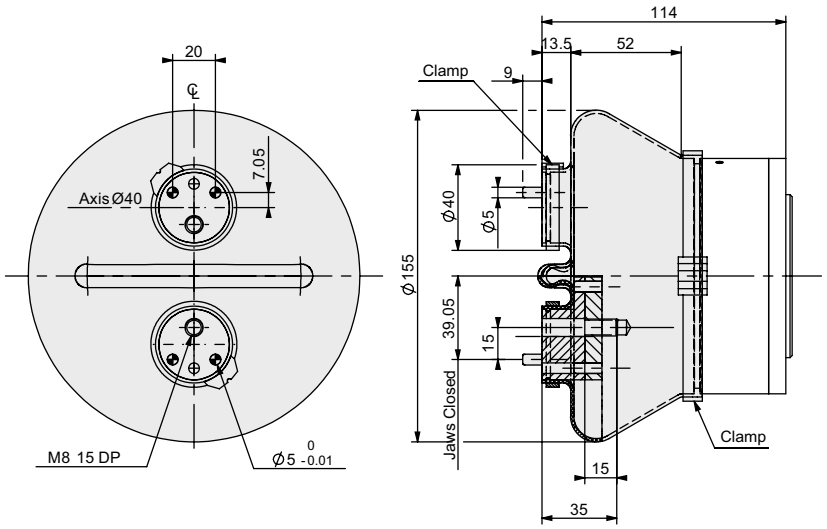

14002P & 16502P

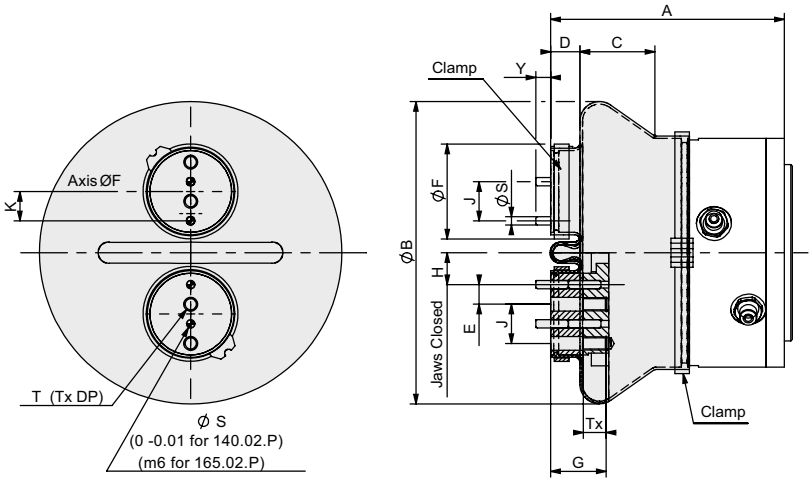

Accessory (SD): Inductive Sensor Mounting Kit

Allows for sensing of two positions: open and closed jaw. The accessory kit **(SD)** includes: 1 sensor bracket, 1 flag and screws. **Sensors are not provided.**

NOTES: To be usable, the cylindrical inductive sensors selected by the customer must have tapped their bodies to a minimum depth H (see table below).

Depending on their length, the cylindrical inductive sensors can extend below the clamp, requiring provision of suitable housing in the surrounding parts. It is possible to control more than 2 positions using a second attachment **(SD)**.

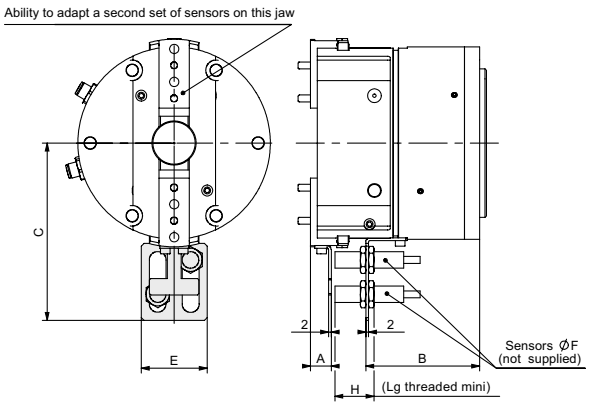

Order #	Model	A	B	C	E	F	H
SD60-80P	6002P & 6002P-C	20	35	67	32	8	35
SD60-80P	8002P & 8002P-C	19	34	77	32	8	35
SD110P	11002P & 11002P-C	19.5	45	97	32	8	35
OSMK-114	14002P & 14002P-C	15	83	129	48	12	28.5
OSMK-115	16502P & 16502P-C	29	96	147	48	12	33

DGC/GC SERIES

2-Jaw Precision Parallel Grippers | Features and Benefits | How To Order

Features:

- Rugged, high precision long stroke gripper
- High impact resistant with double wedge design
- Versatile mounting on top or sides of gripper
- Spring assist option maintains grip in case of air pressure loss
- Two end of stroke inductive sensing positions supported
- DIRECTCONNECT™ mounting (DGC only)
- Shielded design to repel chips and particulates

Applications:

- Machining and harsh environment applications
- High vibration and impact applications
- Pick and Place applications

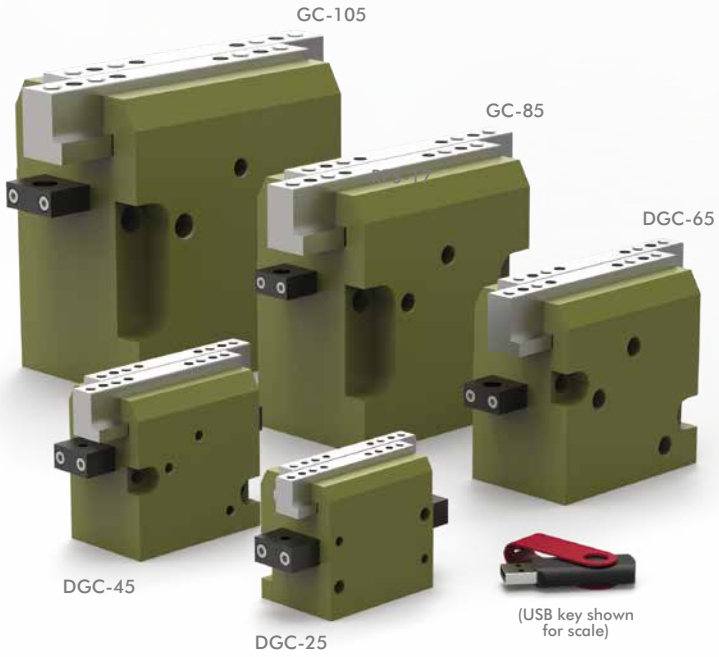

How To Order

Base Model

DGC-25 **GC-85**
DGC-45 **GC-105**
DGC-65

-

Seals	Description
"Blank"	Buna-N
V	Viton® High Temperature

Accessories

Sensor Accessories	Model Numbers	Part Number	Qty/Unit
4mm NPN Inductive Sensor with Quick Disconnect*	25, 45	OISN-014	1-2
4mm PNP Inductive Sensor with Quick Disconnect*	25, 45	OISP-014	1-2
8mm NPN Inductive Sensor with Quick Disconnect*	65, 85	OISN-011	1-2
8mm PNP Inductive Sensor with Quick Disconnect*	65, 85	OISP-011	1-2
12mm NPN Inductive Sensor with Quick Disconnect*	105	OISN-017	1-2
12mm PNP Inductive Sensor with Quick Disconnect*	105	OISP-017	1-2
Quick Disconnect 2 Meter Cable Length*	24, 45, 65, 85	CABL-010	1-2
Quick Disconnect 5 Meter Cable Length*	24, 45, 65, 85	CABL-013	1-2
Quick Disconnect 2 Meter Cable Length*	105	CABL-014	1-2
Quick Disconnect 5 Meter Cable Length*	105	CABL-018	1-2

* Sensor and cable sold separately.

2-Jaw Precision Parallel Grippers | Technical Specifications

Specifications	Units	25	45	65	85	105
Total Rated Grip Force **F** @ 100 psi [7 bar]	N [lb]	474 [106]	481 [108]	796 [179]	1480 [333]	2318 [521]
Total Stroke	mm [in]	20 [0.787]	30 [1.181]	40 [1.575]	50 [1.968]	60 [2.362]
Weight	kg [lbs]	0.35 [0.77]	0.60 [1.32]	1.30 [2.87]	2.20 [4.85]	4.31 [9.50]
Pressure Range	bar [psi]	3-7 [45-100]				
Ingress Protection Class (IP)		IP54				
Displacement	cm^3 [in^3]	16 [0.98]	29 [1.77]	62 [3.78]	136 [8.30]	261 [15.93]
Temperature Range (Buna-N seals)	°C [°F]	-35°~80° [-30°~180°]				
Temperature Range (Viton® seals)	°C [°F]	-30°~150° [-20°~300°]				
Actuation (open/close)	sec	0.20	0.25	0.35	0.50	0.70
Accuracy	mm [in]	±0.02 [±0.0009]				
Repeatability	mm [in]	±0.01 [±0.0004]				
Valve to Required Actuate Single Acting		3-way, 2-position				
Valve to Required Actuate Double Acting		4-way, 2-position				

DGC-25

2-Jaw Precision Parallel Grippers | Dimensions and Technical Specifications

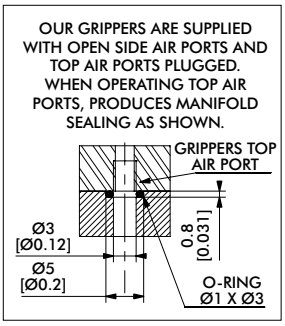

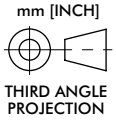

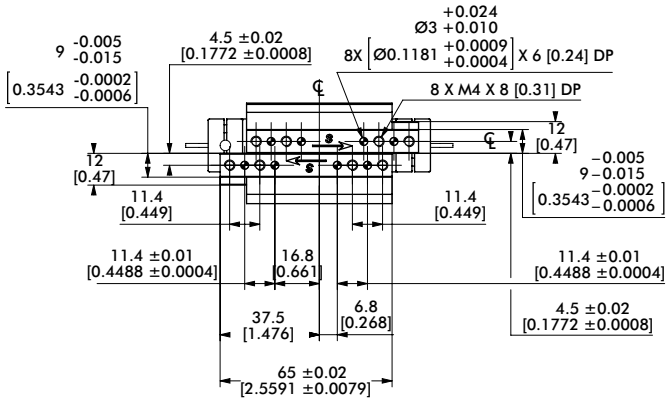

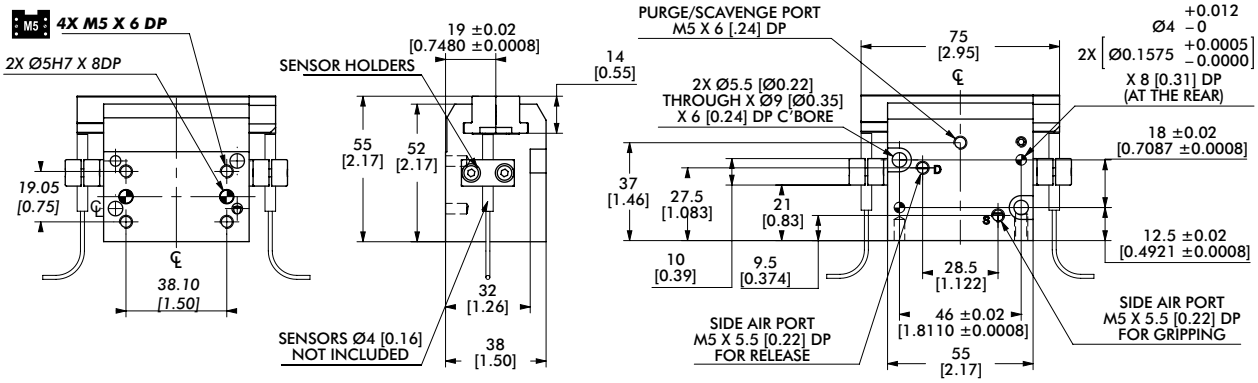

NOTE:
To benefit from safety springs power, on open or on close, gripper must always be operated with "**S**" for GRIPPING and with "**D**" for RELEASE.

Drawing hereafter shows gripper gripping at the end of stroke (inlet through "**S**")

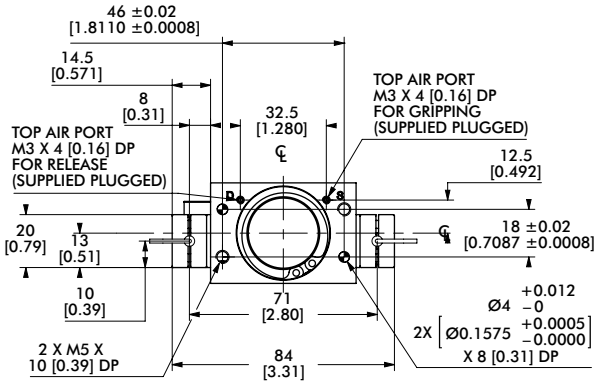

Seal Repair Kits	DGC-25
Buna-N Seal Repair Kit	SLKT-319
Viton® Seal Repair Kit	SLKT-319V

Loading Information

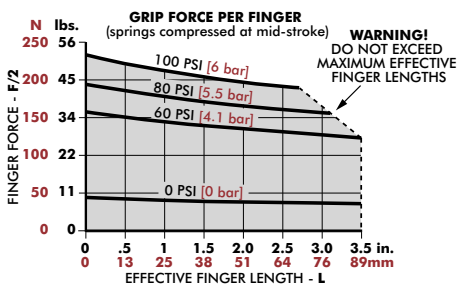

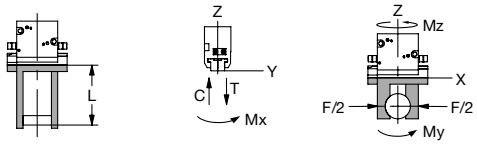

DGC-25	Static	Dynamic
Maximum Tensile **T**	125 N [28 lbs]	25 N [6 lbs]
Maximum Compressive **C**	145 N [33 lbs]	29 N [7 lbs]
Maximum Moment M_x	2 Nm [18 in-lbs]	0.5 Nm [4 in-lbs]
Maximum Moment M_y	4 Nm [35 in-lbs]	1 Nm [9 in-lbs]
Maximum Moment M_z	6 Nm [53 in-lbs]	1.5 Nm [13 in-lbs]

†Capacities are per set of jaws and are not simultaneous

2-Jaw Precision Parallel Grippers | Dimensions and Technical Specifications

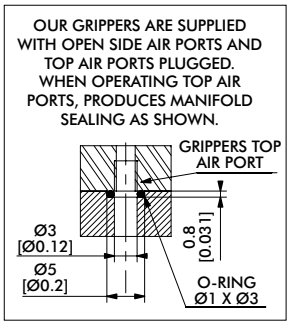

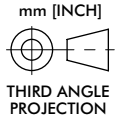

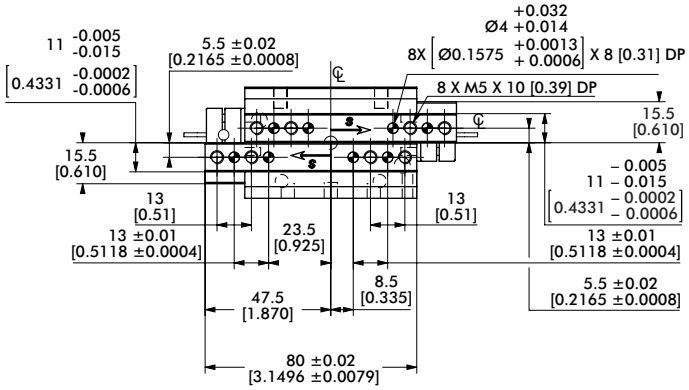

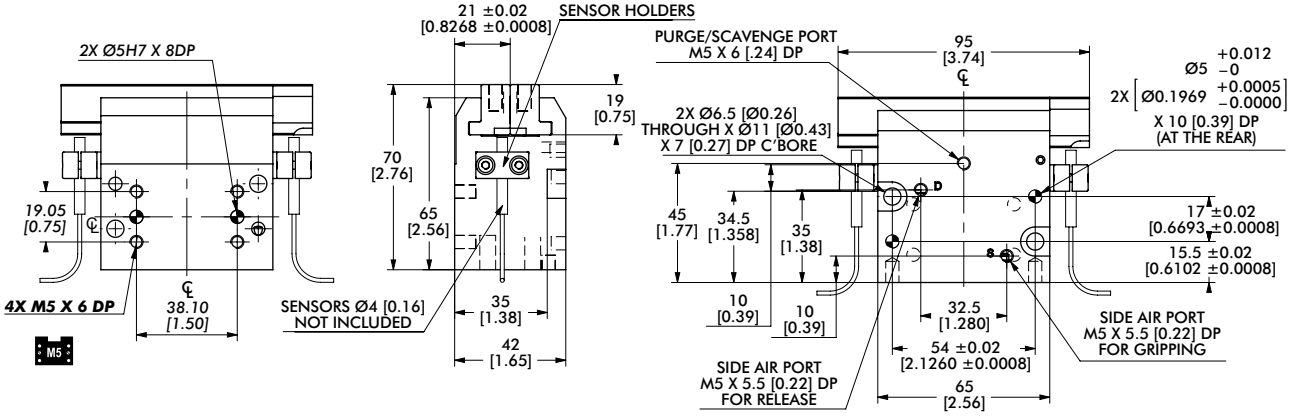

NOTE:
To benefit from safety springs power, on open or on close, gripper must always be operated with "**S**" for GRIPPING and with "**D**" for RELEASE.

Drawing hereafter shows gripper gripping at the end of stroke (inlet through "**S**")

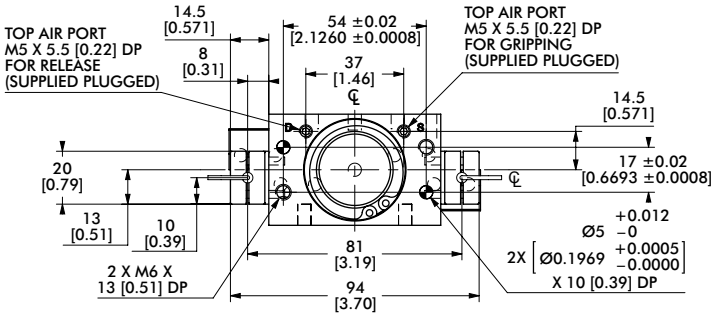

Seal Repair Kits	DGC-45
Buna-N Seal Repair Kit	SLKT-321
Viton® Seal Repair Kit	SLKT-321V

Loading Information

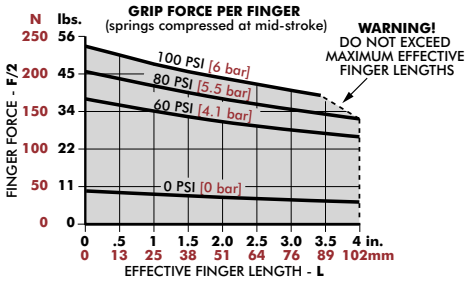

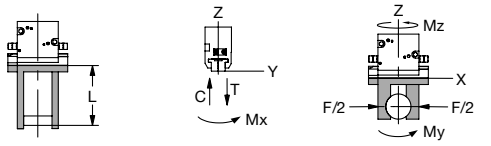

DGC-45	Static	Dynamic
Maximum Tensile **T**	205 N [46 lbs]	41 N [9 lbs]
Maximum Compressive **C**	225 N [51 lbs]	45 N [10 lbs]
Maximum Moment M_X	3 Nm [27 in-lbs]	0.75 Nm [7 in-lbs]
Maximum Moment M_Y	6 Nm [53 in-lbs]	1.5 Nm [13 in-lbs]
Maximum Moment M_Z	9 Nm [80 in-lbs]	2.25 Nm [20 in-lbs]

†Capacities are per set of jaws and are not simultaneous

DGC-65

2-Jaw Precision Parallel Grippers | Dimensions and Technical Specifications

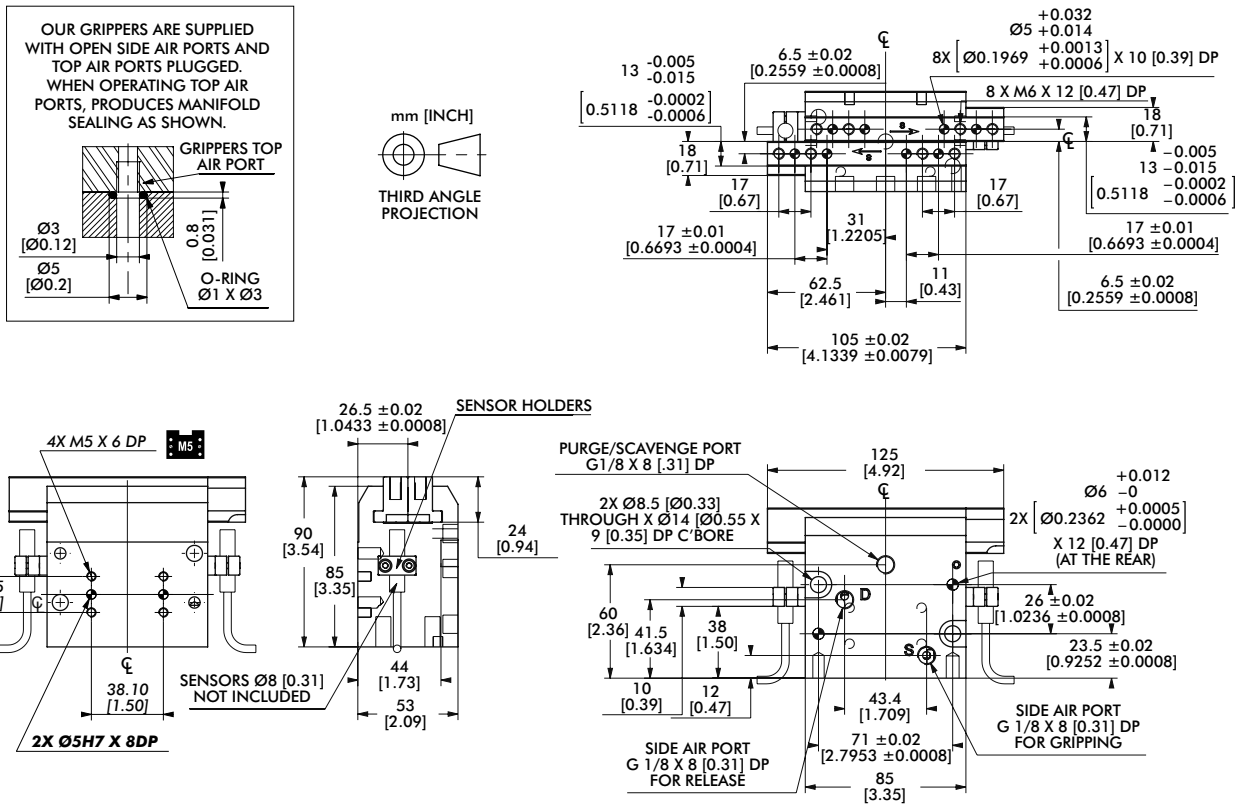

NOTE:
To benefit from safety springs power, on open or on close, gripper must always be operated with "**S**" for GRIPPING and with "**D**" for RELEASE.

Drawing hereafter shows gripper gripping at the end of stroke (inlet through "**S**")

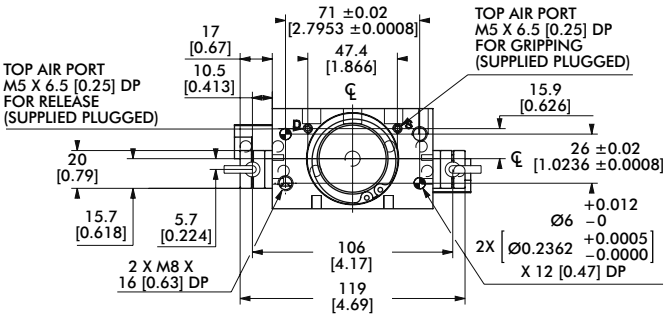

Seal Repair Kits	DGC-65
Buna-N Seal Repair Kit	SLKT-323
Viton® Seal Repair Kit	SLKT-323V

Loading Information

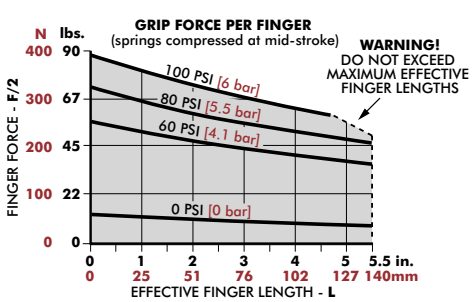

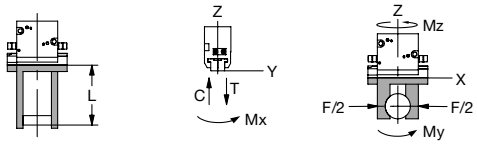

DGC-65	Static	Dynamic
Maximum Tensile **T**	270 N [61 lbs]	54 N [12 lbs]
Maximum Compressive **C**	305 N [69 lbs]	61 N [14 lbs]
Maximum Moment M_X	4 Nm [35 in-lbs]	1 Nm [9 in-lbs]
Maximum Moment M_Y	10 Nm [89 in-lbs]	2.5 Nm [22 in-lbs]
Maximum Moment M_Z	17 Nm [150 in-lbs]	4.25 Nm [38 in-lbs]

†Capacities are per set of jaws and are not simultaneous

Dimensions and technical information are subject to change without notice

2-Jaw Precision Parallel Grippers | Dimensions and Technical Specifications

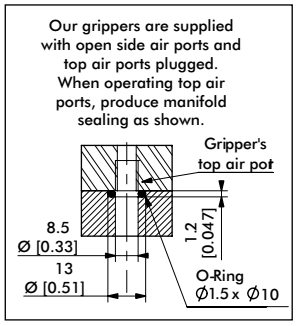

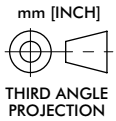

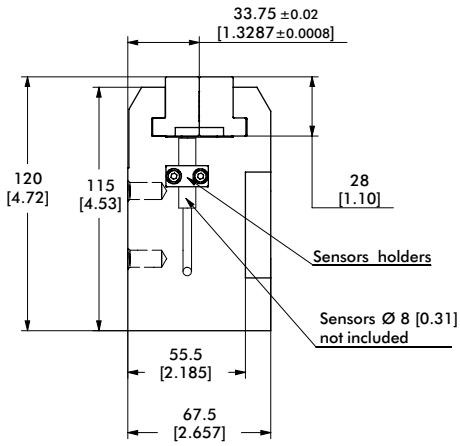

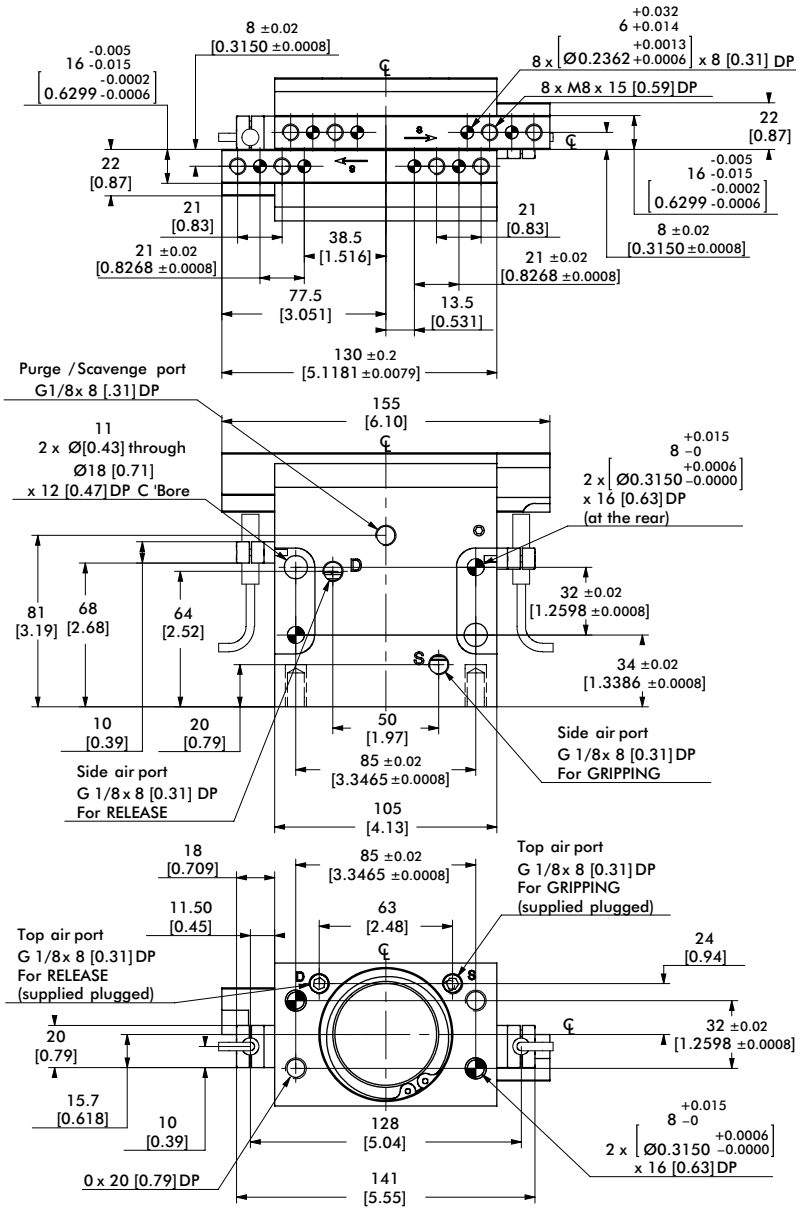

NOTE:
To benefit from safety springs power, on open or on close, gripper must always be operated with "**S**" for GRIPPING and with "**D**" for RELEASE.

Drawing hereafter shows gripper gripping at the end of stroke (inlet through "**S**")

Seal Repair Kits	GC-85
Buna-N Seal Repair Kit	SLKT-325
Viton® Seal Repair Kit	SLKT-325V

Loading Information

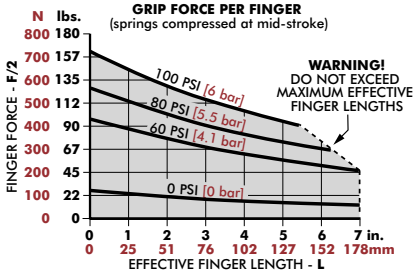

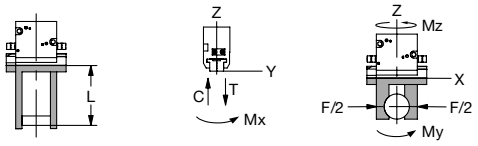

GC-85	Static	Dynamic
Maximum Tensile **T**	370 N [83 lbs]	74 N [17 lbs]
Maximum Compressive **C**	405 N [91 lbs]	81 N [18 lbs]
Maximum Moment M_x	6 Nm [53 in-lbs]	1.5 Nm [13 in-lbs]
Maximum Moment M_y	15 Nm [133 in-lbs]	3.75 Nm [33 in-lbs]
Maximum Moment M_z	27 Nm [239 in-lbs]	6.75 Nm [60 in-lbs]

†Capacities are per set of jaws and are not simultaneous

GC-105

2-Jaw Precision Parallel Grippers | Dimensions and Technical Specifications

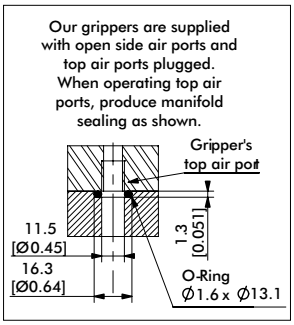

mm [INCH]

THIRD ANGLE PROJECTION

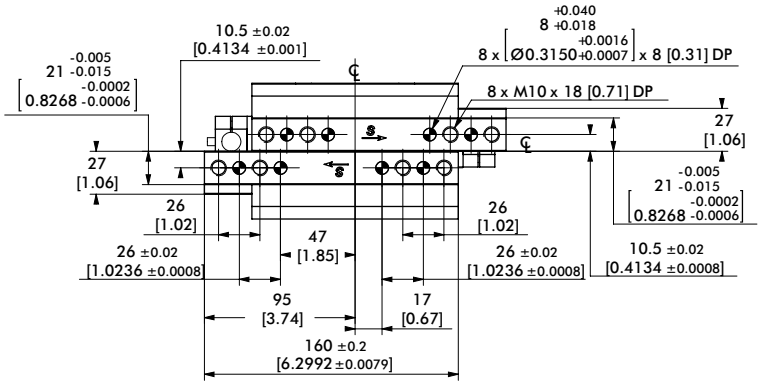

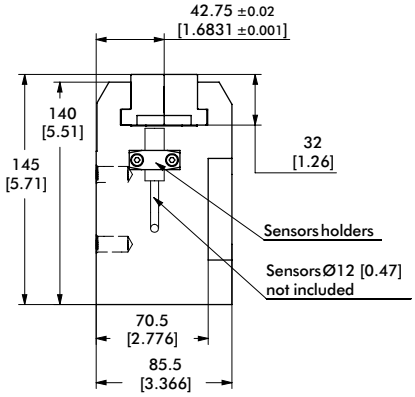

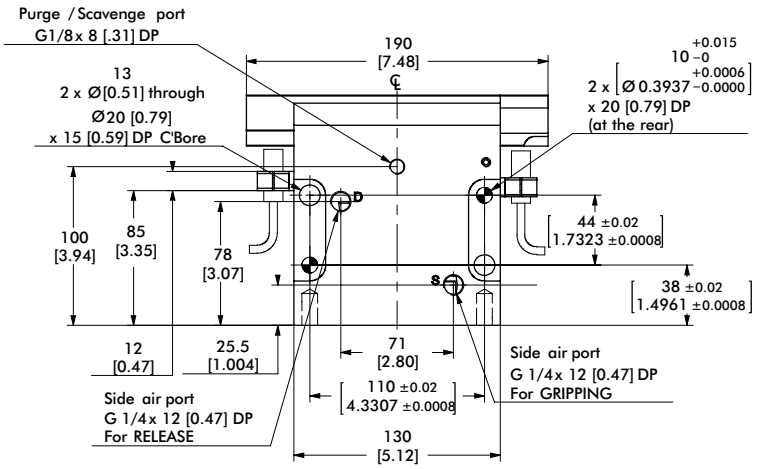

NOTE:
To benefit from safety springs power, on open or on close, gripper must always be operated with "**S**" for GRIPPING and with "**D**" for RELEASE.

Drawing hereafter shows gripper gripping at the end of stroke (inlet through "**S**")

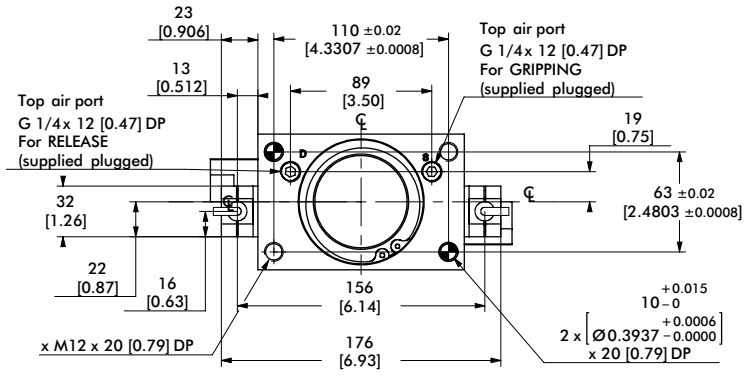

Seal Repair Kits	DGC-105
Buna-N Seal Repair Kit	SLKT-27
Viton® Seal Repair Kit	SLKT-327V

Loading Information

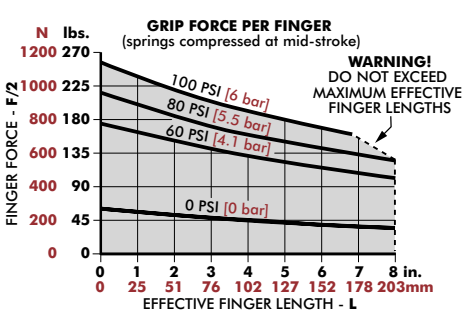

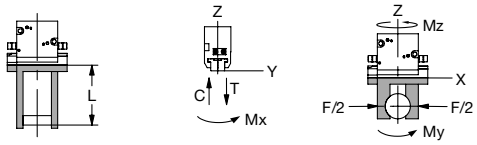

GC-105	Static	Dynamic
Maximum Tensile **T**	415 N [93 lbs]	83 N [19 lbs]
Maximum Compressive **C**	455 N [102 lbs]	91 N [20 lbs]
Maximum Moment M_x	8 Nm [71 in-lbs]	2 Nm [18 in-lbs]
Maximum Moment M_y	19 Nm [168 in-lbs]	4.75 Nm [42 in-lbs]
Maximum Moment M_z	40 Nm [354 in-lbs]	10 Nm [89 in-lbs]

†Capacities are per set of jaws and are not simultaneous

Notes

DPL SERIES

2-Jaw Precision Parallel Grippers | Features and Benefits | How To Order

Features:

- Robust long stroke, high grip force precision gripper
- Rack and pinion design with double acting pistons
- Shielded design to repel chips and particulates
- Synchronous or non-synchronous jaw operation
- Spring assist option maintains grip in case of air pressure loss
- Multi-position sensing up to 3 locations



Applications:

- Packaging, pick and place applications
- Long finger gripping applications
- Large and heavy part handling

How To Order

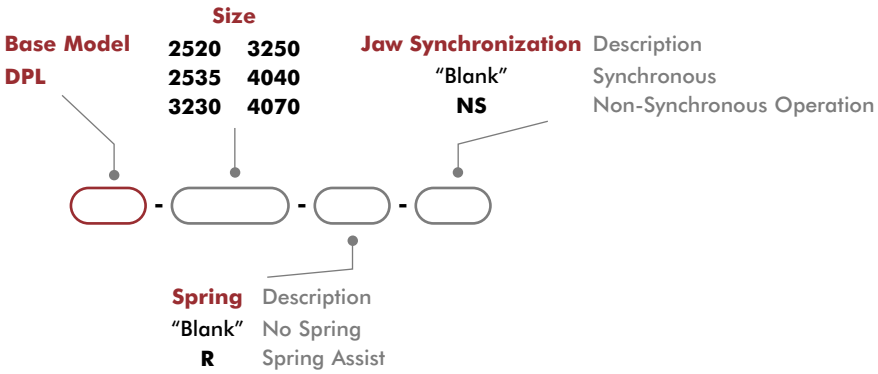

Accessories

Sensor Accessories	Model Numbers	Part Number	Qty/Unit
M8 PNP Magneto Resistive Sensor with Quick Disconnect*	All Models	OHSP-017	1-3
M8 NPN Magneto Resistive Sensor with Quick Disconnect*	All Models	OHSN-017	1-3
M8 PNP Magneto Resistive Sensor (90° barrel) w/Qk. Disc.*	All Models	OHSP-011	1-3
M8 NPN Magneto Resistive Sensor (90° barrel) w/Qk. Disc.*	All Models	OHSN-011	1-3
M8 PNP Inductive Sensor with Quick Disconnect*	2520, 2535, 3230, 3250	OISP-011	1-3
M8 NPN Inductive Sensor with Quick Disconnect*	2520, 2535, 3230, 3250	OISN-011	1-3
M12 PNP Inductive Sensor with Quick Disconnect*	4040, 4070	OISP-017	1-3
M12 NPN Inductive Sensor with Quick Disconnect*	4040, 4070	OISN-017	1-3
Inductive Sensor Mounting Kit (3 Holders + 2 Flags)	See Datasheet		1
M8 Quick Disconnect 2 Meter Cable Length*	All Models	CABL-010	1-3
M8 Quick Disconnect 5 Meter Cable Length*	All Models	CABL-013	1-3
M12 Quick Disconnect 2 Meter Cable Length*	4040, 4070	CABL-014	1-3
M12 Quick Disconnect 5 Meter Cable Length*	4040, 4070	CABL-018	1-3

Pneumatic Accessories	Model Numbers	Part Number	Qty/Unit
Fitting Push-in Straight M5 - 6mm O.D. Tube	2520, 2535	PLFT-037	1-2
Fitting Push-in 90° Elbow M5 - 6mm O.D. Tube	2520, 2535	PLFT-041	1-2
Fitting Push-in Straight G1/8 - 6mm O.D. Tube	3230, 3250, 4040, 4070	PLFT-038	1-2
Fitting Push-in 90° Elbow G1/8 - 6mm O.D. Tube	3230, 3250, 4040, 4070	PLFT-042	1-2

*Sensor and cable sold separately.

2-Jaw Precision Parallel Grippers | Technical Specifications

Specifications	Units	2520	2535	3230
Total Rated Grip Force **F** @ 100 psi	N [lb]	811 [182]	768 [173]	1359 [306]
Total Stroke	mm [in]	40 [1.57]	70 [2.76]	60 [2.36]
Weight	kg [lbs]	1.38 [3.04]	1.80 [3.97]	2.26 [4.98]
Pressure Range (without springs)	bar [psi]	2-7 [30-100]		
Pressure Range (with springs)	bar [psi]	4-7 [60-100]		
Ingress Protection Class (IP)		IP54		
Displacement	cm^3 [in^3]	39 [2.38]	68 [4.15]	96 [5.86]
Temperature Range	°C [°F]	-20°~80° [-4°~180°]		
Actuation	sec	0.3	0.4	0.4
Accuracy	mm [in]	±0.08 [±0.003]		
Repeatability	mm [in]	±0.025 [±0.0010]		
Valve to Actuate Single Acting		3-way, 2-position		
Valve to Actuate Double Acting		4-way, 2-position		

Specifications	Units	3250	4040	4070
Total Rated Grip Force **F** @ 100 psi	N [lb]	1306 [294]	2035 [457]	2035 [457]
Total Stroke	mm [in]	100 [3.94]	80 [3.15]	140 [5.51]
Weight	kg [lbs]	3.02 [6.66]	4.30 [9.48]	6.00 [13.23]
Pressure Range (without springs)	bar [psi]	2-7 [30-100]		
Pressure Range (with springs)	bar [psi]	4-7 [60-100]		
Ingress Protection Class (IP)		IP54		
Displacement	cm^3 [in^3]	160 [9.96]	200 [12.20]	350 [21.36]
Temperature Range	°C [°F]	-20°~80° [-4°~180°]		
Actuation	sec	0.5	0.5	0.7
Accuracy	mm [in]	±0.08 [±0.003]		
Repeatability	mm [in]	±0.025 [±0.0010]		
Valve to Actuate Single Acting		3-way, 2-position		
Valve to Actuate Double Acting		4-way, 2-position		

DPL-2520

2-Jaw Precision Parallel Grippers | Dimensions and Technical Specifications

Sensor Accessories	2520
Inductive Sensor Mounting Kit (3 holders + 2 flags)	OSMK-099

Seal Repair Kits	2520
Buna-N Seal Repair Kit	SLKT-233
Rear Inlet Seal Repair Kit	SLKT-316

Mounting Accessories	2520
In-line Jaw Mounting Kit	ODPL-001

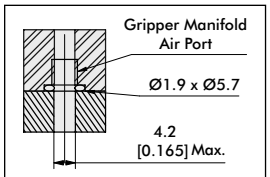

Our grippers are supplied with open side air ports and top air ports plugged. When operating top air ports, produce manifold sealing as shown (seals are provided with your gripper in a sealed bag) Part# SLKT-316

mm [INCH]

THIRD ANGLE PROJECTION

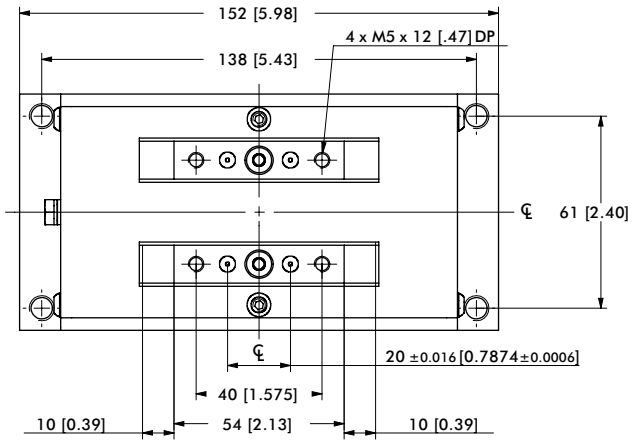

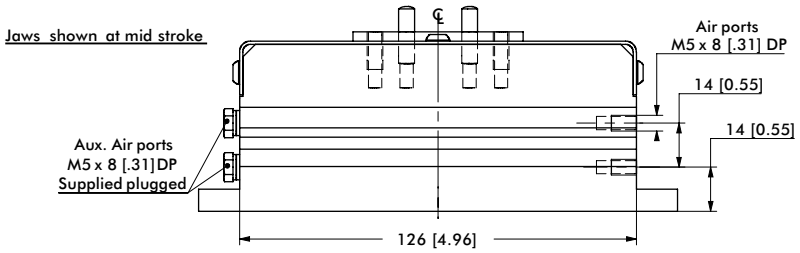

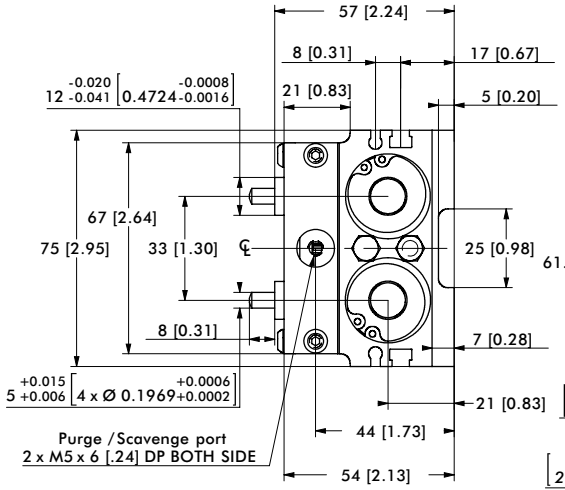

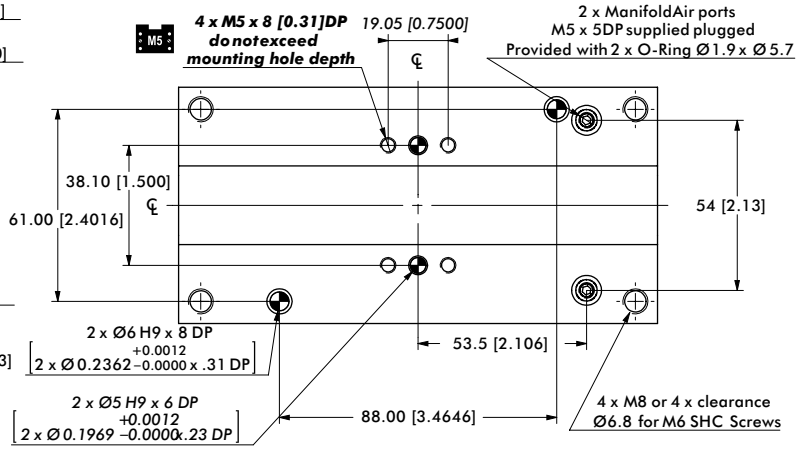

Loading Information

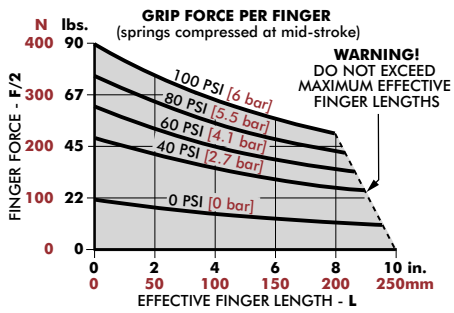

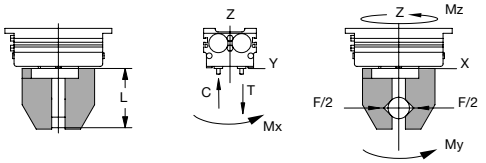

DPL-2520	Static	Dynamic
Maximum Tensile **T**	222 N [50 lbs]	67 N [15 lbs]
Maximum Compressive **C**	222 N [50 lbs]	67 N [15 lbs]
Maximum Moment M_x	6 Nm [50 in-lbs]	1 Nm [12 in-lbs]
Maximum Moment M_y	7 Nm [60 in-lbs]	2 Nm [15 in-lbs]
Maximum Moment M_z	6 Nm [50 in-lbs]	1 Nm [12 in-lbs]

†Capacities are per set of jaws and are not simultaneous

Dimensions and technical information are subject to change without notice

2-Jaw Precision Parallel Grippers | Dimensions and Technical Specifications

Sensor Accessories	2535
Inductive Sensor Mounting Kit (3 holders + 2 flags)	OSMK-099

Seal Repair Kits	2535
Buna-N Seal Repair Kit	SLKT-233
Rear Inlet Seal Repair Kit	SLKT-316

Mounting Accessories	2535
In-line Jaw Mounting Kit	ODPL-002

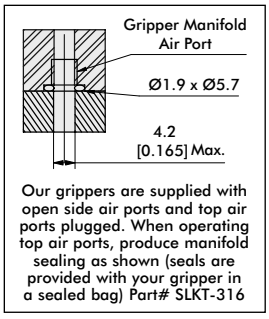

Our grippers are supplied with open side air ports and top air ports plugged. When operating top air ports, produce manifold sealing as shown (seals are provided with your gripper in a sealed bag) Part# SLKT-316

mm [INCH]

THIRD ANGLE PROJECTION

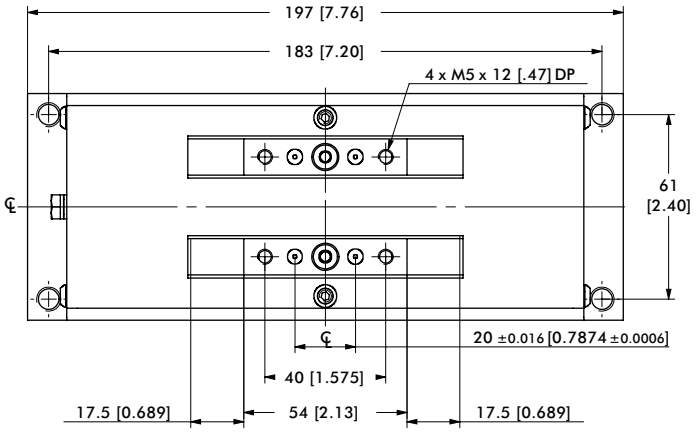

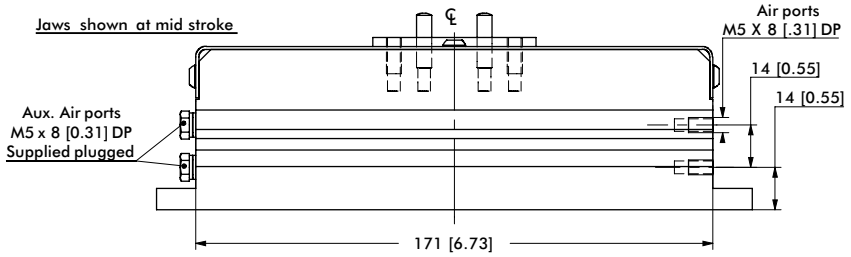

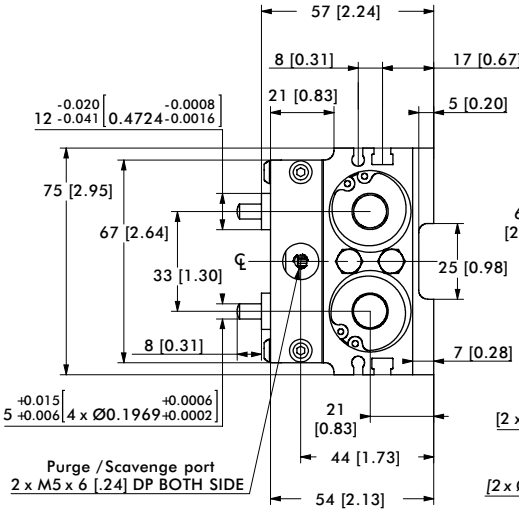

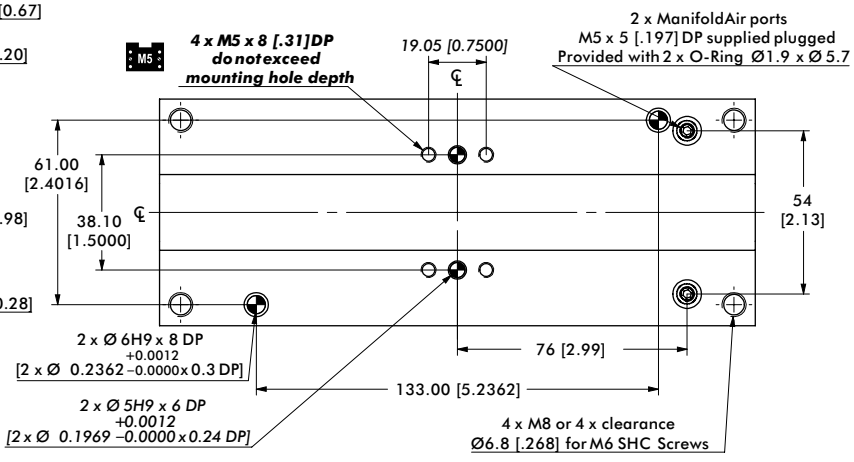

Loading Information

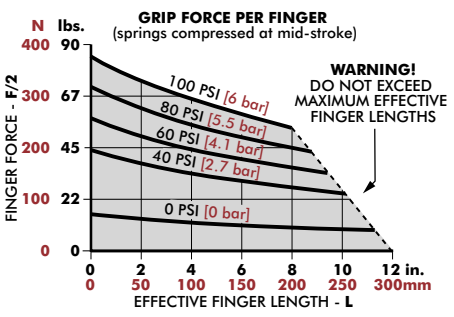

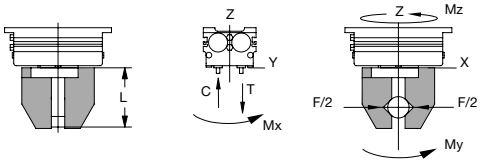

DPL-2335	Static	Dynamic
Maximum Tensile **T**	267 N [60 lb]	89 N [20 lb]
Maximum Compressive **C**	267 N [60 lb]	89 N [20 lb]
Maximum Moment M_x	11 Nm [100 in-lb]	3 Nm [25 in-lb]
Maximum Moment M_y	14 Nm [120 in-lb]	3 Nm [30 in-lb]
Maximum Moment M_z	11 Nm [100 in-lb]	3 Nm [25 in-lb]

†Capacities are per set of jaws and are not simultaneous

DPL-3230

2-Jaw Precision Parallel Grippers | Dimensions and Technical Specifications

Sensor Accessories	3230
Inductive Sensor Mounting Kit (3 holders + 2 flags)	OSMK-100

Seal Repair Kits	3230
Buna-N Seal Repair Kit	SLKT-234
Rear Inlet Seal Repair Kit	SLKT-316

Mounting Accessories	3230
In-line Jaw Mounting Kit	ODPL-003

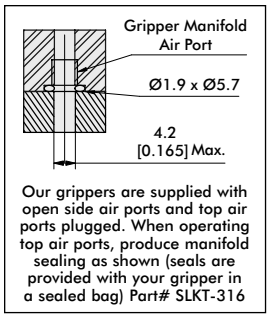

Our grippers are supplied with open side air ports and top air ports plugged. When operating top air ports, produce manifold sealing as shown (seals are provided with your gripper in a sealed bag) Part# SLKT-316

mm [INCH]

THIRD ANGLE PROJECTION

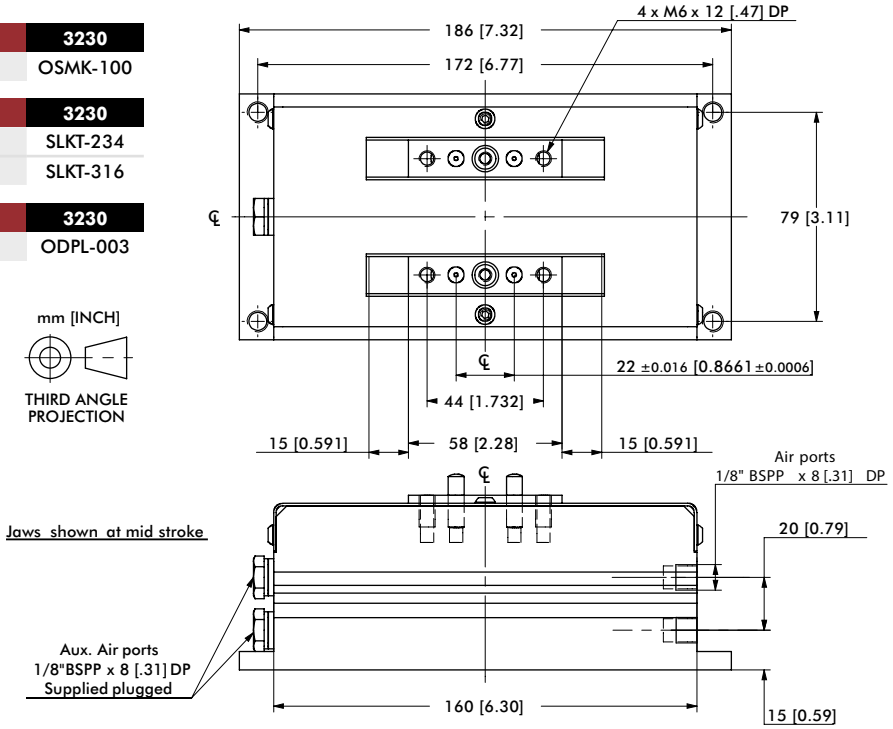

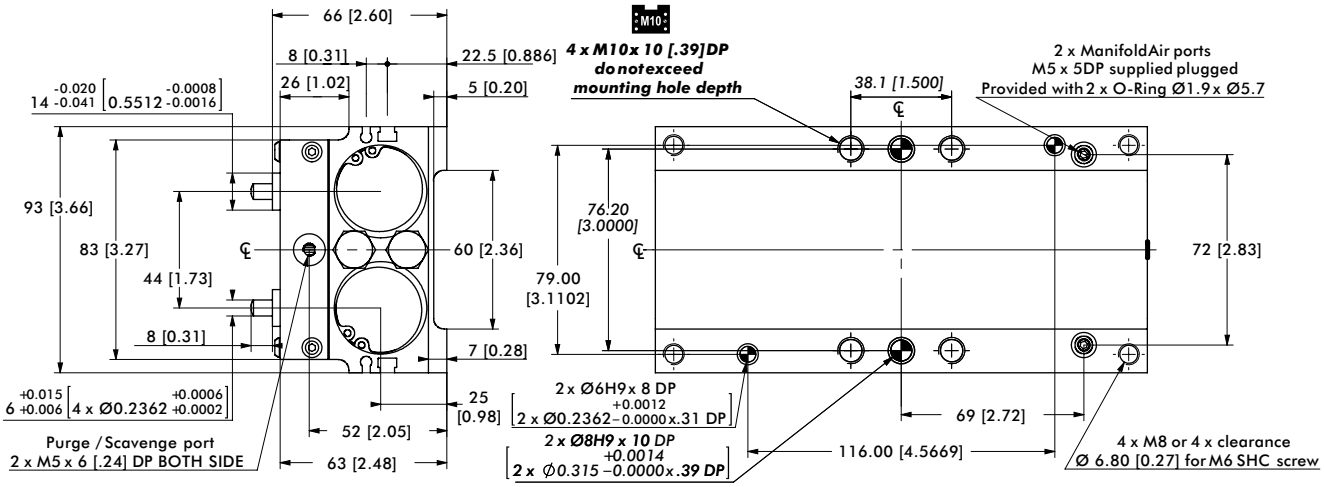

Loading Information

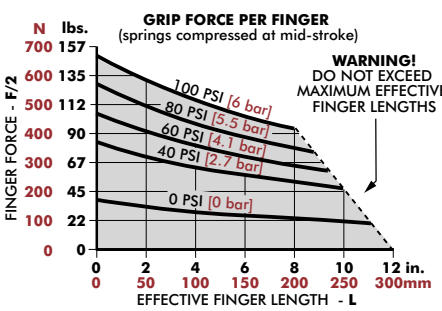

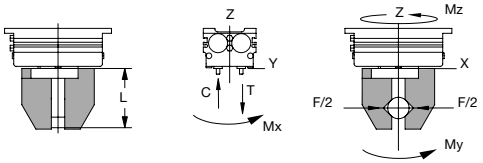

DPL-3230	Static	Dynamic
Maximum Tensile **T**	1525 N [343 lbs]	270 N [61 lbs]
Maximum Compressive **C**	1900 N [427 lbs]	270 N [61 lbs]
Maximum Moment M_x	76 Nm [673 in-lbs]	8 Nm [71 in-lbs]
Maximum Moment M_y	227 Nm [2009 in-lbs]	22 Nm [195 in-lbs]
Maximum Moment M_z	120 Nm [1062 in-lbs]	22 Nm [195 in-lbs]

†Capacities are per set of jaws and are not simultaneous

Dimensions and technical information are subject to change without notice

Sensor Accessories	3250
Inductive Sensor Mounting Kit (3 holders + 2 flags)	OSMK-100

Seal Repair Kits	3250
Buna-N Seal Repair Kit	SLKT-234
Rear Inlet Seal Repair Kit	SLKT-316

Mounting Accessories	3250
In-line Jaw Mounting Kit	ODPL-004

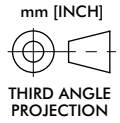

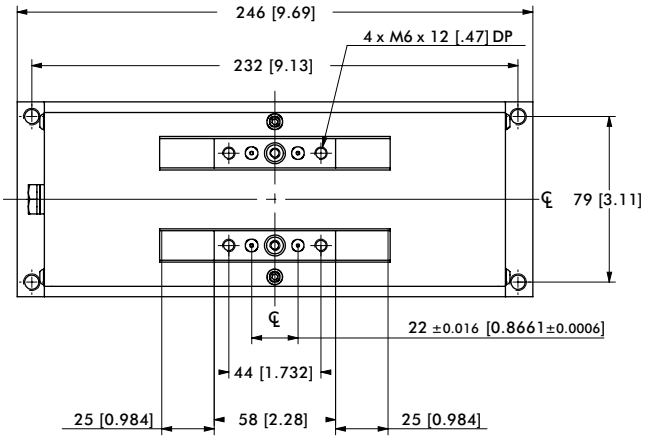

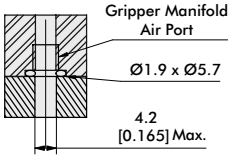

Our grippers are supplied with open side air ports and top air ports plugged. When operating top air ports, produce manifold sealing as shown (seals are provided with your gripper in a sealed bag) Part# SLKT-316

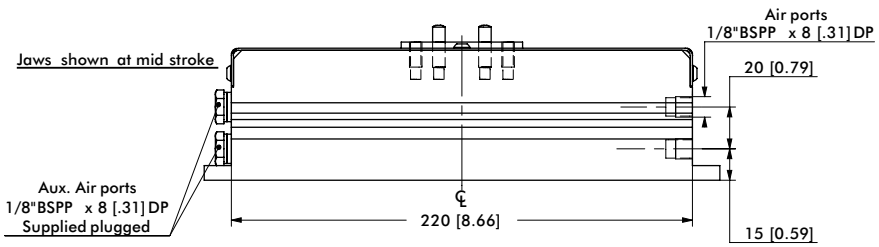

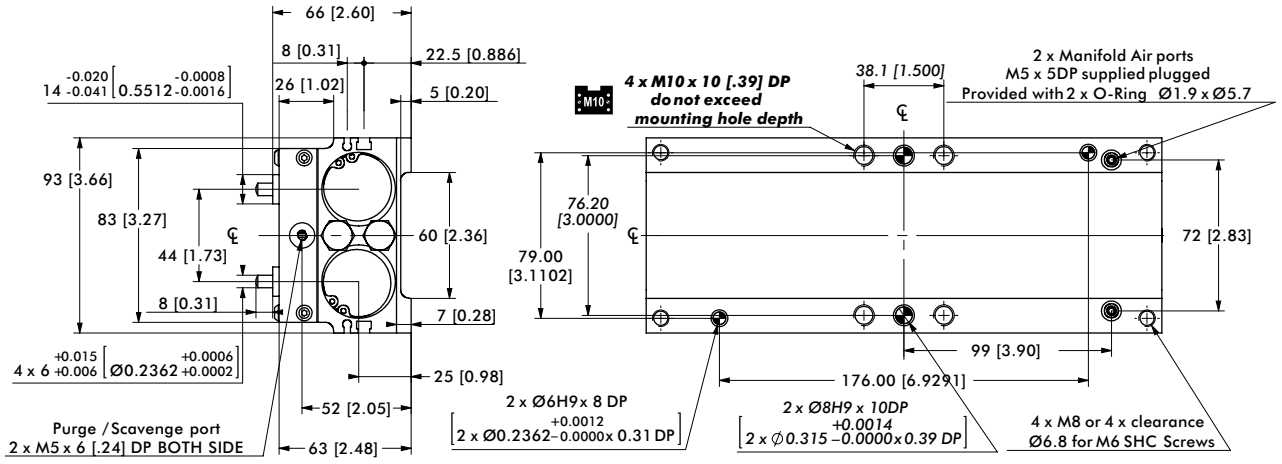

Loading Information

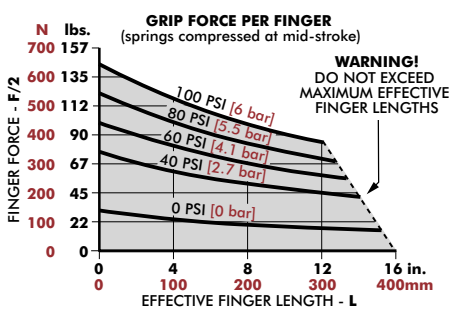

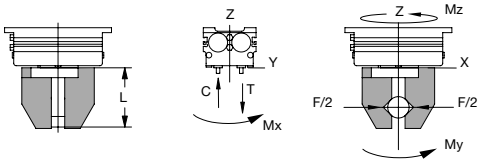

DPL-3250	Static	Dynamic
Maximum Tensile **T**	1850 N [416 lbs]	260 N [58 lbs]
Maximum Compressive **C**	2315 N [520 lbs]	260 N [58 lbs]
Maximum Moment M_x	87 Nm [770 in-lbs]	8 Nm [71 in-lbs]
Maximum Moment M_y	350 Nm [3098 in-lbs]	32 Nm [283 in-lbs]
Maximum Moment M_z	190 Nm [1682 in-lbs]	32 Nm [283 in-lbs]

†Capacities are per set of jaws and are not simultaneous

DPL-4040

2-Jaw Precision Parallel Grippers | Dimensions and Technical Specifications

Sensor Accessories	4040
Inductive Sensor Mounting Kit (3 holders + 2 flags)	OSMK-101

Seal Repair Kits	4040
Buna-N Seal Repair Kit	SLKT-235
Rear Inlet Seal Repair Kit	SLKT-316

Mounting Accessories	4040
In-line Jaw Mounting Kit	ODPL-005

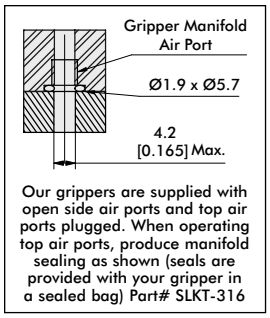

Our grippers are supplied with open side air ports and top air ports plugged. When operating top air ports, produce manifold sealing as shown (seals are provided with your gripper in a sealed bag) Part# SLKT-316

mm [INCH]

THIRD ANGLE PROJECTION

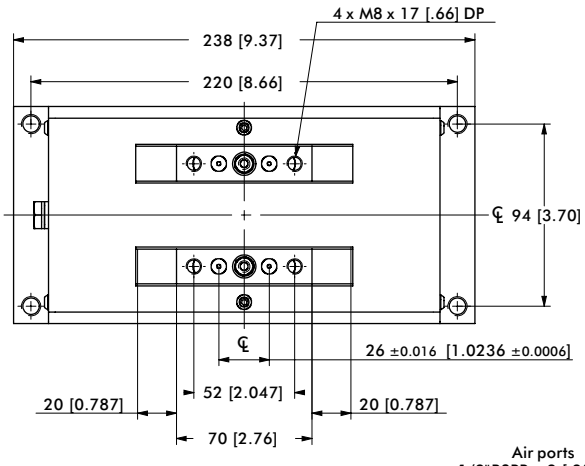

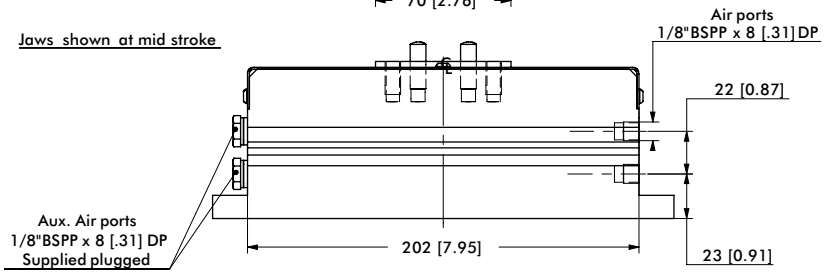

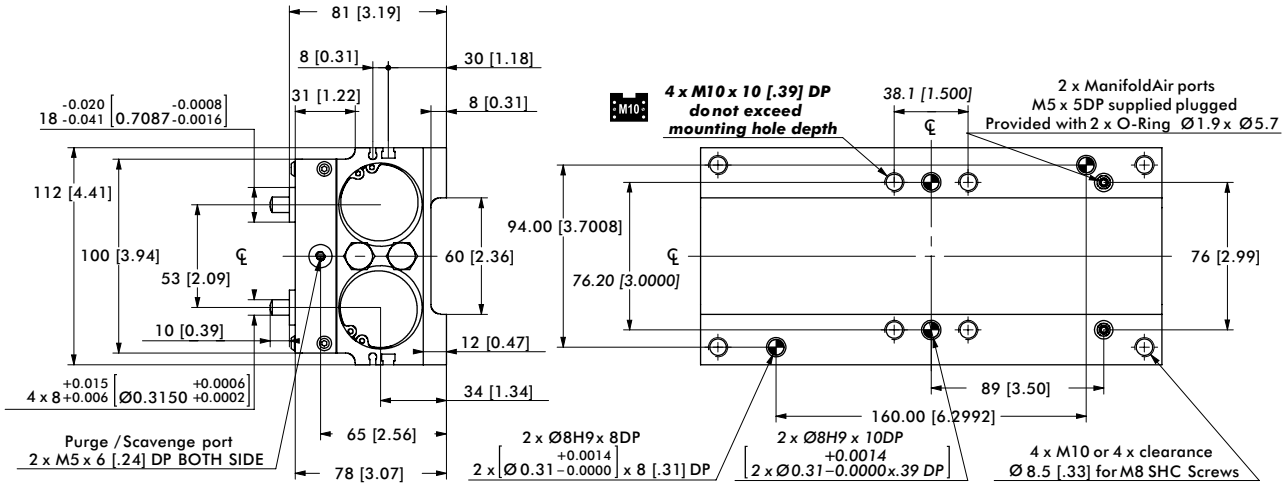

Loading Information

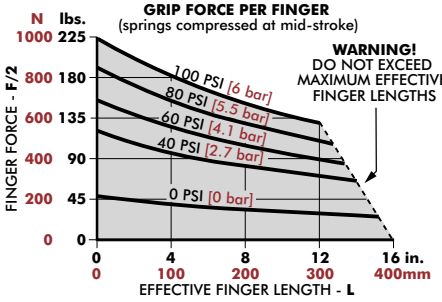

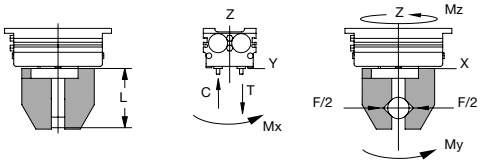

DPL-4040	Static	Dynamic
Maximum Tensile **T**	2030 N [456 lbs]	400 N [90 lbs]
Maximum Compressive **C**	2440 N [549 lbs]	400 N [90 lbs]
Maximum Moment M_X	135 Nm [1195 in-lbs]	14 Nm [124 in-lbs]
Maximum Moment M_Y	420 Nm [3717 in-lbs]	43 Nm [381 in-lbs]
Maximum Moment M_Z	220 Nm [1947 in-lbs]	43 Nm [381 in-lbs]

†Capacities are per set of jaws and are not simultaneous

Dimensions and technical information are subject to change without notice

2-Jaw Precision Parallel Grippers | Dimensions and Technical Specifications

Sensor Accessories	4070
Inductive Sensor Mtg Kit (3 holders + 2 flags)	OSMK-101

Seal Repair Kits	4070
Buna-N Seal Repair Kit	SLKT-235
Rear Inlet Seal Repair Kit	SLKT-316

Mounting Accessories	4070
In-line Jaw Mounting Kit	ODPL-006

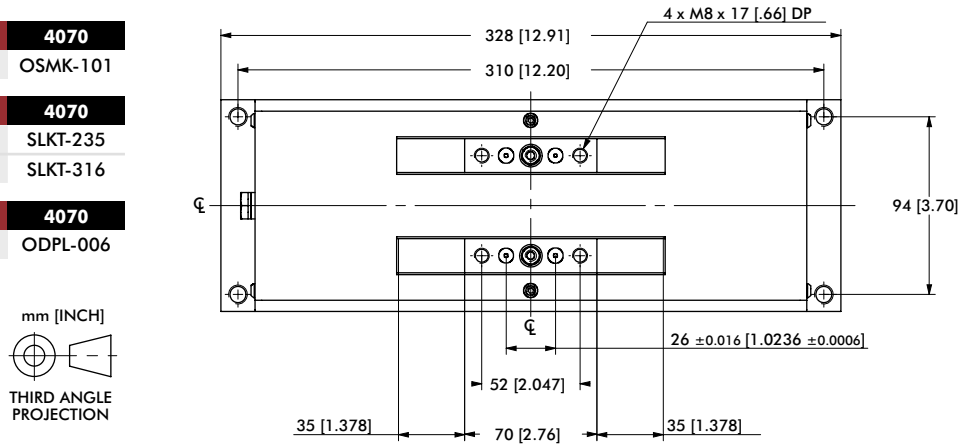

mm [INCH]

THIRD ANGLE PROJECTION

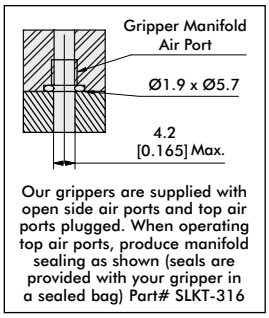

Our grippers are supplied with open side air ports and top air ports plugged. When operating top air ports, produce manifold sealing as shown (seals are provided with your gripper in a sealed bag) Part# SLKT-316

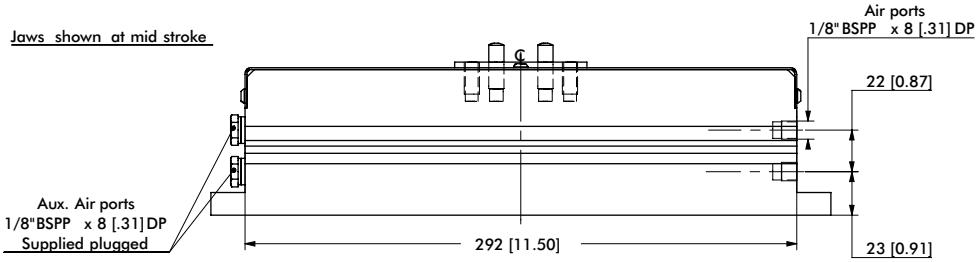

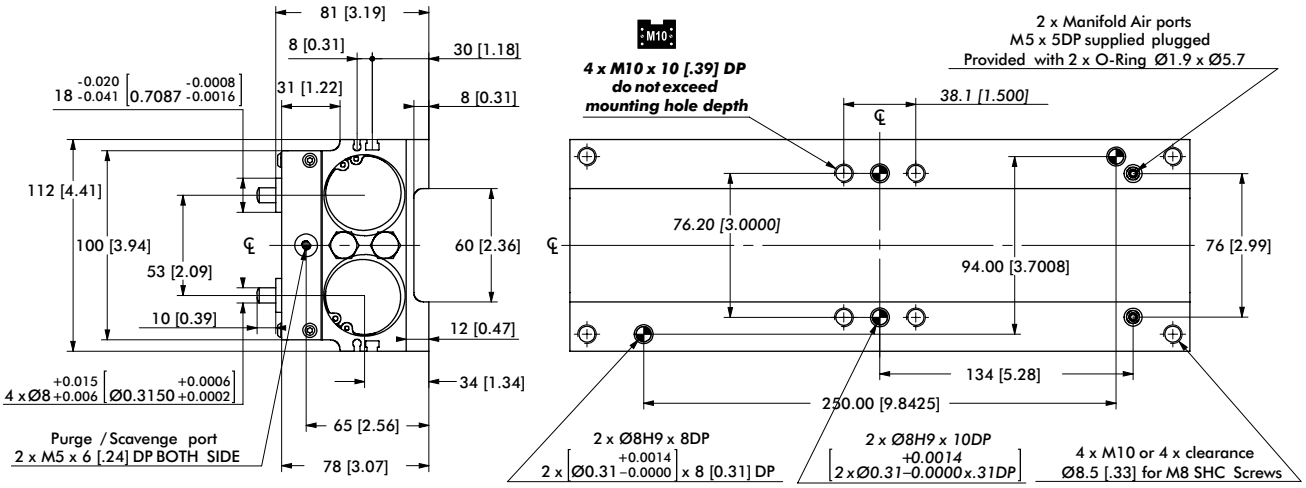

Loading Information

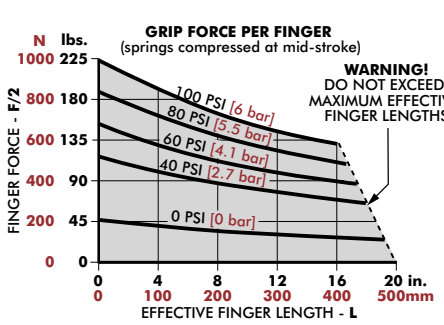

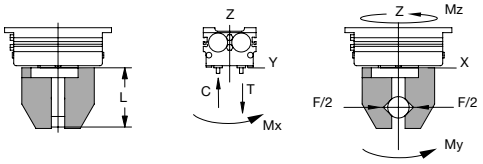

DPL-4070	Static	Dynamic
Maximum Tensile **T**	2510 N [564 lbs]	400 N [90 lbs]
Maximum Compressive **C**	3010 N [677 lbs]	400 N [90 lbs]
Maximum Moment M_X	160 Nm [1416 in-lbs]	15 Nm [133 in-lbs]
Maximum Moment M_Y	665 Nm [5885 in-lbs]	64 Nm [566 in-lbs]
Maximum Moment M_Z	350 Nm [3098 in-lbs]	64 Nm [566 in-lbs]

†Capacities are per set of jaws and are not simultaneous

DPL OPTIONS & ACCESSORIES

2-Jaw Precision Parallel Grippers | Dimensions and Technical Specifications

In-Line Jaw Adapter:

The In-Line Jaw Adapter allows for the simplification of the finger design. It provides for “in-line” alignment of the finger mounting holes. The kit includes 2 interfaces, screws, and dowel kit.

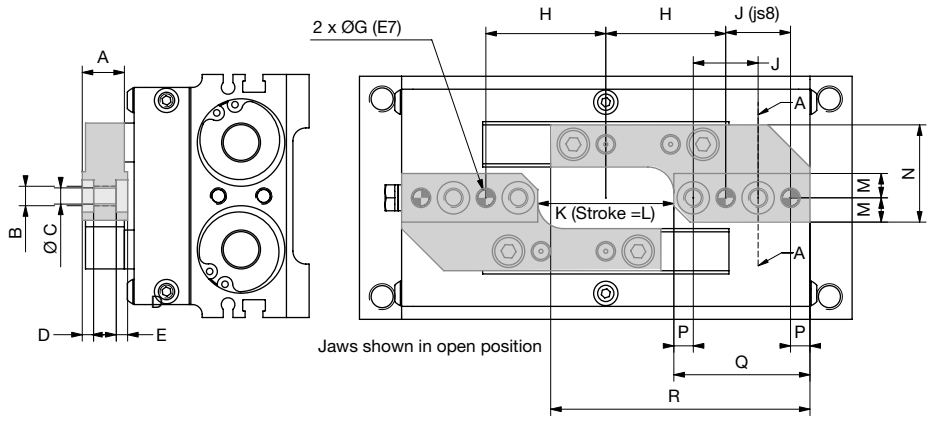

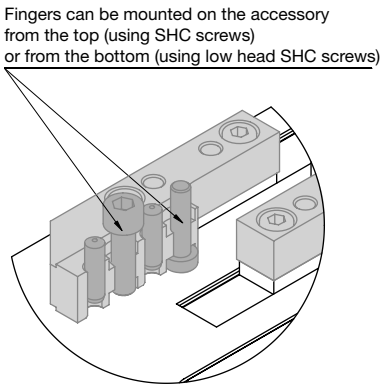

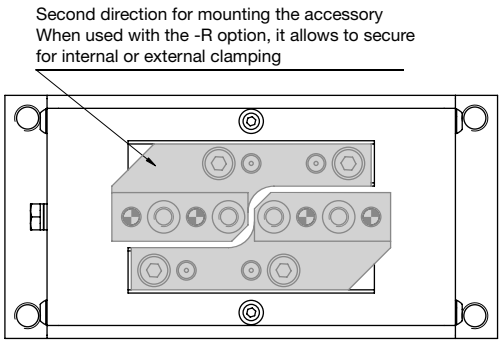

Order #	Use With	A	B	C	D	E	F	G	H	J	K	L	M	N	P	Q	R
ODPL-001	DPL-2520	[0.51] 13	M6	[0.20] 5	[0.14] 3.5	[0.28] 7	M5	[0.20] 5	[1.46] 37	[0.79] 20	[1.65] 42	[1.57] 40	[0.30] 7.5	[1.18] 30	[0.24] 6	[1.65] 42	[3.15] 80
ODPL-002	DPL-2535								[2.05] 52		[2.83] 72	[2.76] 70					[3.44] 87.5
ODPL-003	DPL-3230	[0.59] 15	M8	[0.27] 6.8	[0.12] 3	[0.39] 10	M6	[0.24] 6	[1.97] 50	[0.87] 22	[2.44] 62	[2.36] 60	[0.39] 10	[1.54] 39	[0.31] 8	[1.93] 49	[3.70] 94
ODPL-004	DPL-3250								[2.76] 70		[4.02] 102	[3.94] 100					[4.09] 104
ODPL-005	DPL-4040	[0.83] 21	M10	[0.33] 8.5	[0.20] 5	[0.47] 12	M8	[0.31] 8	[2.48] 63	[1.02] 26	[3.23] 82	[3.15] 80	[0.47] 12	[1.87] 47.5	[0.35] 9	[2.24] 57	[4.45] 113
ODPL-006	DPL-4070								[3.66] 93		[5.59] 142	[5.51] 140					[5.04] 128

Optional Spring Assist (-R):

The safety spring allows the gripper to retain the part should the air supply fail or allows the gripper to be used in single acting mode. The -R option is ideal for internal (ID) or external gripping (OD). The ID or OD will depend on the finger design. The fingers will face towards center of gripper for OD gripping or will face outward for ID gripping.

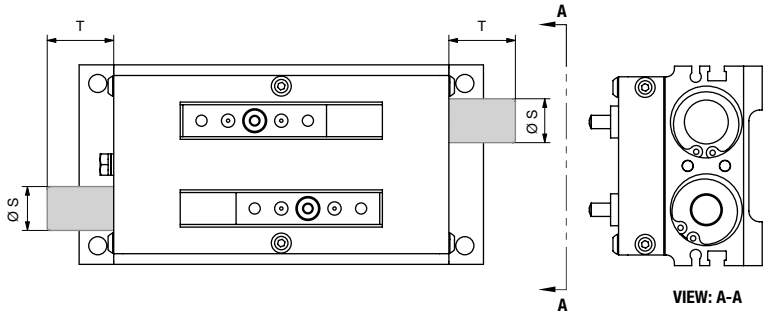

Model #	S	T
DPL-2520-R	[0.65] 16.5	[0.98] 25
DPL-2535-R		[1.18] 30
DPL-3230-R	[0.98] 25	[0.76] 19.3
DPL-3250-R		[0.96] 24.3
DPL-4040-R	[1.10] 28	[1.69] 42.8
DPL-4070-R	[1.16] 29.5	[0.98] 24.8

Inductive Sensors Holder:

Sense up to 3 jaw positions; open jaws, closed jaws, and part present. The kit includes 3 sensor holders and 2 flags. Sensors are not included.

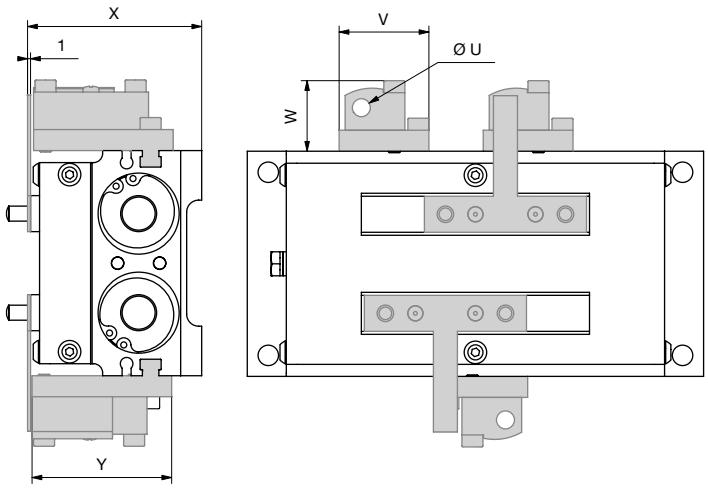

Order #	Use With	U	V	W	X	Y
OSMK-099	DPL-2520	[0.31] 8	[1.18] 30	[0.95] 24	[2.28] 58	[1.83] 46.5
	DPL-2535					
OSMK-100	DPL-3230		[0.87] 22	[0.95] 24	[2.64] 67	[1.97] 50
	DPL-3250					
OSMK-101	DPL-4040	[0.47] 12	[0.87] 22	[1.06] 27	[3.23] 82	[2.26] 57.5
	DPL-4070					

DPP SERIES

2-Jaw Precision Parallel Grippers | Features and Benefits | How To Order

Features:

- Highest precision gripper with excellent part position repeatability
- Zero side play and smooth operation with shielded Dual-V roller bearing design
- Spring assist closed option for increased grip force or maintain grip upon air loss.
- Multiple air port locations simplifies air line routing
- Supports up to four sensing positions of jaws
- Synchronous or non-synchronous jaw operation
- Long life supported with shielded design
- Purge/scavenge ports for clean & harsh environments

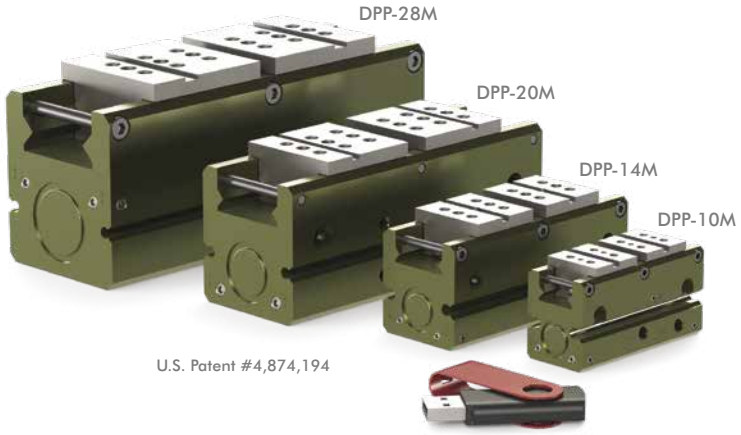

U.S. Patent #4,874,194

(USB key shown for scale)

Applications:

- Delicate part handling, low friction, low pressure applications
- Long finger gripping applications
- Non-synchronous applications requiring independent jaw motion

How To Order

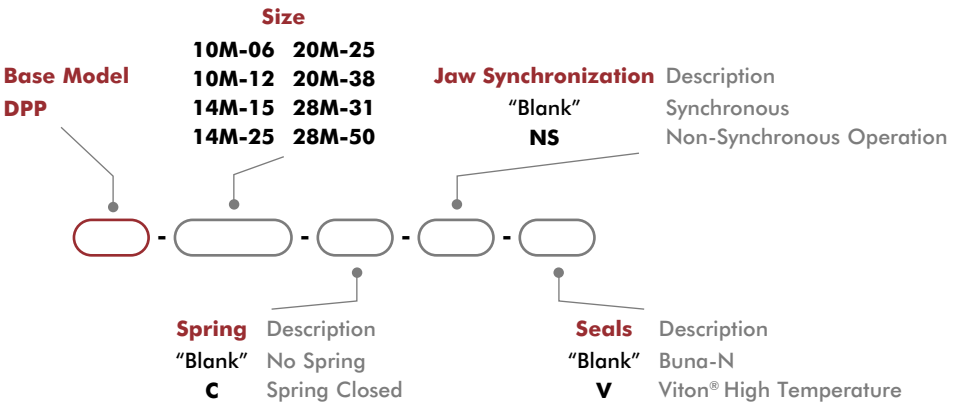

Accessories

Sensor Accessories	Model Numbers	Part Number	Qty/Unit
Inductive Sensor Mounting Kit (Mounts 2 sensors)	10M, 14M	OSMK-119	1-2
Inductive Sensor Mounting Kit (Mounts 2 sensors)	20M, 28M	OSMK-120	1-2
NPN Inductive Sensor (with Qk. Disc.)*	All Models	OISN-014	1-4
PNP Inductive Sensor (with Qk. Disc.)*	All Models	OISP-014	1-4
NPN Magneto Resistive Sensor (with Qk. Disc.)*†	All Models	OHSN-017	1-4
PNP Magneto Resistive Sensor (with Qk. Disc.)*†	All Models	OHSP-017	1-4
NPN Magneto Resistive Sensor 90° (with Qk. Disc.)*†	All Models	OHSN-011	1-4
PNP Magneto Resistive Sensor 90° (with Qk. Disc.)*†	All Models	OHSP-011	1-4
Quick Disconnect Cable (2 meters long)*	All Models	CABL-010	1-4
Quick Disconnect Cable (5 meters long)*	All Models	CABL-013	1-4

Pneumatic Accessories	Model Numbers	Part Number	Qty/Unit
Adjustable Flow Control-M3 Elbow-3MM OD Tube Push-in Style	10M, 14M	VLVF-018	1-2
Adjustable Flow Control-M5 Elbow-6MM OD Tube Push-in Style	20M, 28M	VLVF-008	1-2
Fail Safe Valve - M5	All Models	OFSV-004	1

*Sensor and cable sold separately. †Piston magnet standard.

Dimensions and technical information are subject to change without notice

2-Jaw Precision Parallel Grippers | Technical Specifications

Specifications	Units	10M-6	10M-12	14M-15	14M-25
Total Rated Grip Force **F** @ 100 psi [7 bar]*	N [lb]	120 [27]		227 [51]	214 [48]
Total Stroke	mm [in]	6.4 [0.25]	12.7 [0.50]	15.9 [0.63]	25.4 [1.00]
Weight	kg [lbs]	0.16 [0.35]	0.20 [0.45]	0.48 [1.05]	0.57 [1.25]
Pressure Range (without spring)	bar [psi]	0.3-7 [5-100]			
Pressure Range (with spring)	bar [psi]	1.4-7 [20-100]		3.4-7 [50-100]	
Ingress Protection Class (IP)		IP43			
Displacement	cm^3 [in^3]	0.5 [0.032]	1.1 [0.065]	2.5 [0.156]	4.1 [0.249]
Temperature Range (Buna-N seals)	°C [°F]	-35°~80° [-30°~180°]			
Temperature Range (Viton® seals)	°C [°F]	-30°~120° [-20°~250°]			
Actuation (without spring)	sec	0.10	0.11	0.15	0.19
Actuation (with spring)	sec	0.11	0.12	0.16	0.20
Accuracy	mm [in]	±0.03 [±0.001]			
Repeatability	mm [in]	±0.01 [±0.0005]			
Valve to Actuate Single Acting		3-way, 2-position			
Valve to Actuate Double Acting		4-way, 2-position			

*With springs

Specifications	Units	20M-25	20M-38	28M-31	28M-50
Total Rated Grip Force **F** @ 100 psi [7 bar]*	N [lb]	458 [103]	449 [101]	912 [205]	934 [210]
Total Stroke	mm [in]	25.4 [1.00]	38.1 [1.50]	31.8 [1.50]	50.8 [2.00]
Weight	kg [lbs]	1.02 [2.25]	1.41 [3.10]	2.06 [4.55]	2.83 [6.25]
Pressure Range (without spring)	bar [psi]	0.3-7 [5-100]			
Pressure Range (with spring)	bar [psi]	2.8-7 [40-100]	2.1-7 [30-100]	2.1-7 [30-100]	2.8-7 [40-100]
Ingress Protection Class (IP)		IP43			
Displacement	cm^3 [in^3]	8.5 [0.519]	12.8 [0.779]	20.4 [1.243]	32.6 [1.998]
Temperature Range (Buna-N seals)	°C [°F]	-35°~80° [-30°~180°]			
Temperature Range (Viton® seals)	°C [°F]	-30°~120° [-20°~250°]			
Actuation (without spring)		0.20	0.24	0.19	0.23
Actuation (with spring)		0.22	0.29	0.25	0.30
Accuracy	mm [in]	±0.03 [±0.001]			
Repeatability	mm [in]	±0.01 [±0.0005]			
Valve to Actuate Single Acting		3-way, 2-position			
Valve to Actuate Double Acting		4-way, 2-position			

*With springs

DPP-10M-06, 10M-12

2-Jaw Precision Parallel Grippers | Dimensions and Technical Specifications

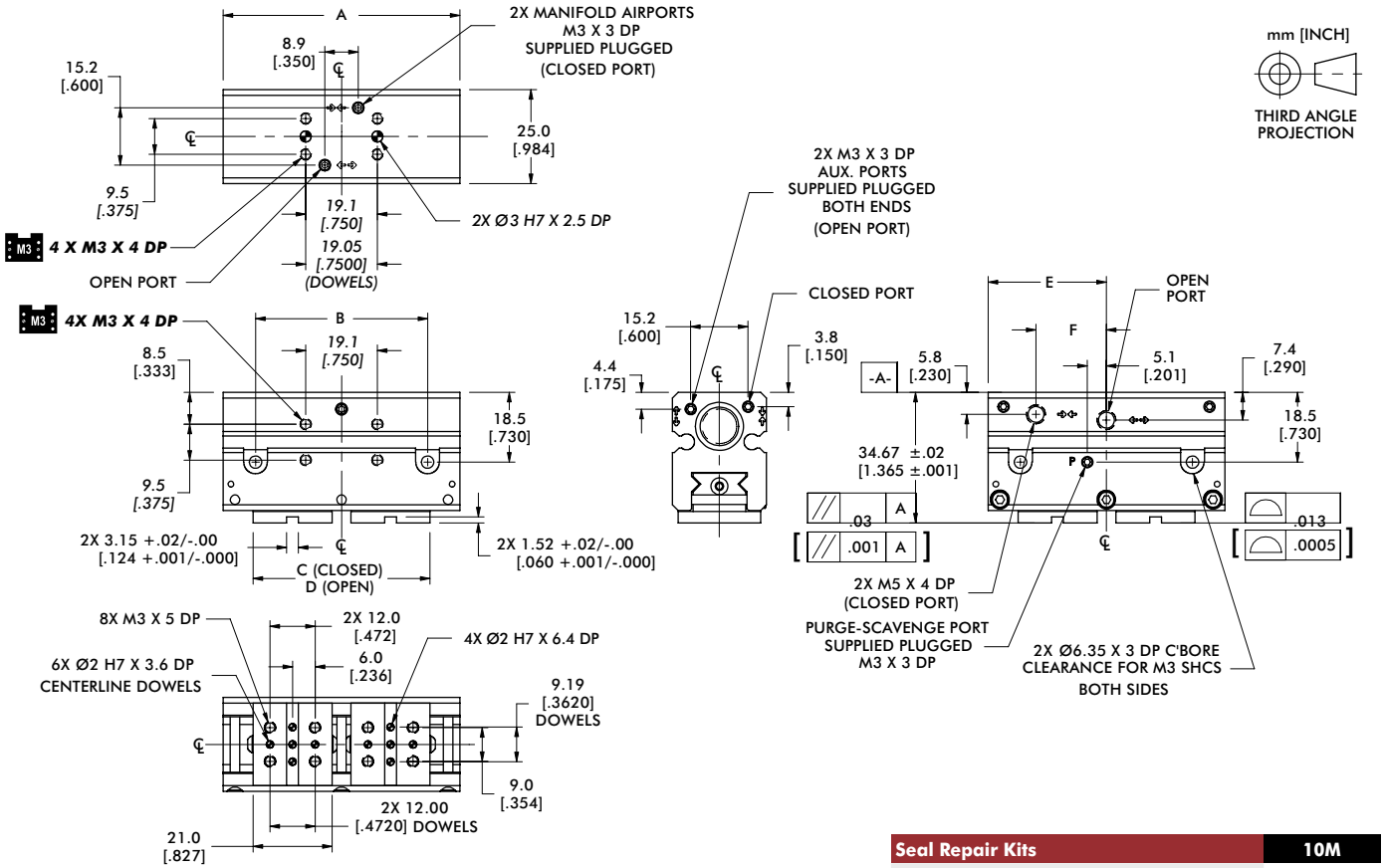

Model	A	B	C	D	E	F
DPP-10M-06	62.9 [2.475]	45.7 [1.800]	47 [1.85]	53 [2.10]	31.4 [1.238]	18.7 [0.738]
DPP-10M-12	73.7 [2.900]	53.3 [2.100]	49 [1.93]	62 [2.43]	36.8 [1.450]	24.1 [0.950]

Dimensions in mm [in]

Seal Repair Kits	10M
Buna-N Seal Repair Kit	SLKT-343
Viton® Seal Repair Kit	SLKT-343V
Manifold Seal Kit (Viton® only)	SLKT-241V

Loading Information

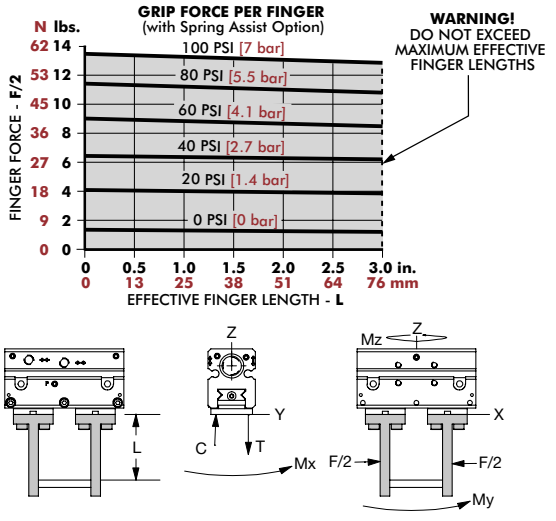

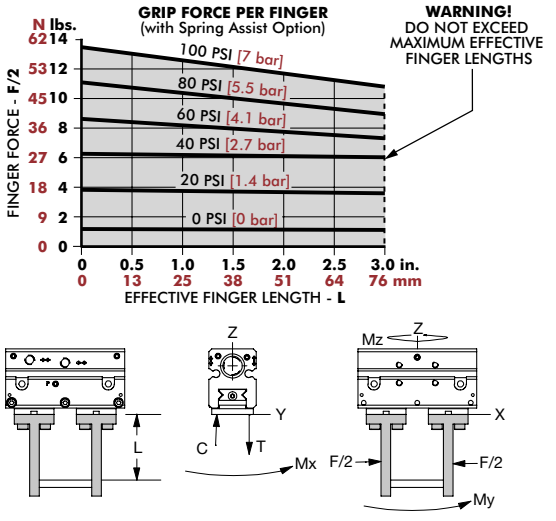

DPP-10M-06	Static	Dynamic
Maximum Tensile **T**	267 N [60 lbs]	89 N [20 lbs]
Maximum Compressive **C**	267 N [60 lbs]	89 N [20 lbs]
Maximum Moment M_x	4.0 Nm [35 in-lbs]	1.4 Nm [12 in-lbs]
Maximum Moment M_y	5.6 Nm [50 in-lbs]	1.9 Nm [17 in-lbs]
Maximum Moment M_z	4.0 Nm [35 in-lbs]	1.4 Nm [12 in-lbs]

†Capacities are per set of jaws and are not simultaneous

DPP-10M-12	Static	Dynamic
Maximum Tensile **T**	311 N [70 lbs]	102 N [23 lbs]
Maximum Compressive **C**	311 N [70 lbs]	102 N [23 lbs]
Maximum Moment M_x	5.6 Nm [50 in-lbs]	1.9 Nm [17 in-lbs]
Maximum Moment M_y	7.3 Nm [65 in-lbs]	2.5 Nm [22 in-lbs]
Maximum Moment M_z	5.6 Nm [50 in-lbs]	1.9 Nm [17 in-lbs]

†Capacities are per set of jaws and are not simultaneous

Dimensions and technical information are subject to change without notice

DPP-14M-15, 14M-25

2-Jaw Precision Parallel Grippers | Dimensions and Technical Specifications

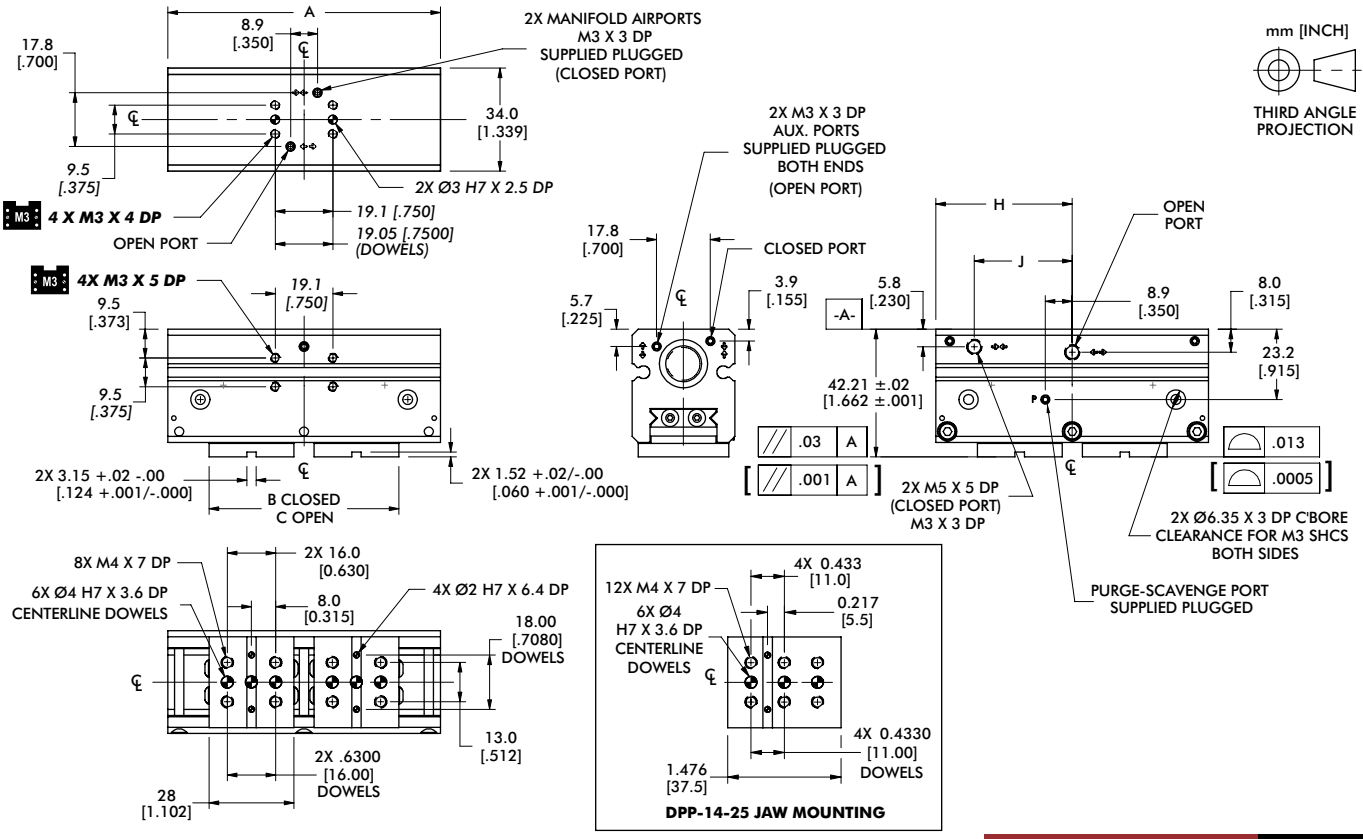

Model	A	B	C	D	E
DPP-14M-15	90.2 [3.550]	63 [2.47]	79 [3.10]	45.1 [1.775]	32.4 [1.275]
DPP-14M-25	118.7 [4.675]	82 [3.23]	107 [4.23]	59.4 [2.338]	46.7 [1.838]

Dimensions in mm [in]

Seal Repair Kits	14M
Buna-N Seal Repair Kit	SLKT-344
Viton® Seal Repair Kit	SLKT-344V
Manifold Seal Kit (Viton® only)	SLKT-241V

Loading Information

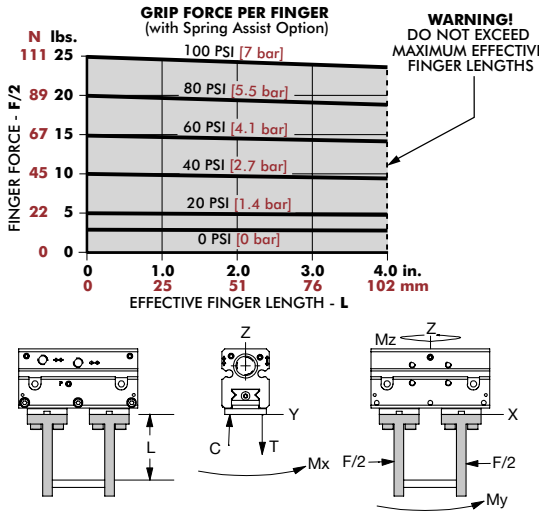

DPP-14M-15	Static	Dynamic
Maximum Tensile **T**	556 N [125 lbs]	187 N [42 lbs]
Maximum Compressive **C**	556 N [125 lbs]	187 N [42 lbs]
Maximum Moment M_X	9.0 Nm [80 in-lbs]	3.1 Nm [27 in-lbs]
Maximum Moment M_Y	12 Nm [105 in-lbs]	4.0 Nm [35 in-lbs]
Maximum Moment M_Z	9.0 Nm [80 in-lbs]	3.1 Nm [27 in-lbs]

†Capacities are per set of jaws and are not simultaneous

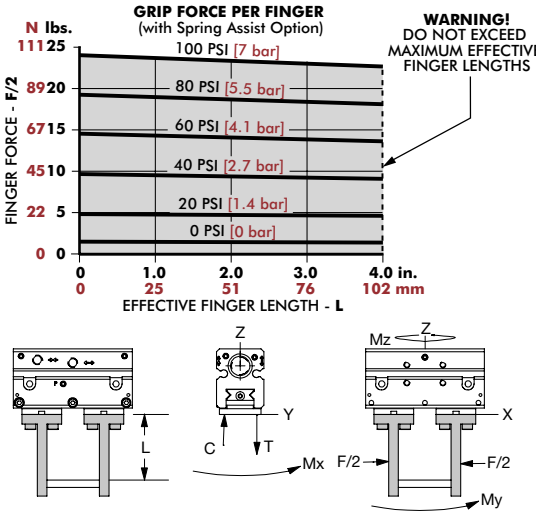

DPP-14M-25	Static	Dynamic
Maximum Tensile **T**	734 N [165 lbs]	245 N [55 lbs]
Maximum Compressive **C**	734 N [165 lbs]	245 N [55 lbs]
Maximum Moment M_X	11 Nm [100 in-lbs]	3.7 Nm [33 in-lbs]
Maximum Moment M_Y	14 Nm [125 in-lbs]	4.7 Nm [42 in-lbs]
Maximum Moment M_Z	11 Nm [100 in-lbs]	3.7 Nm [33 in-lbs]

†Capacities are per set of jaws and are not simultaneous

DPP-20M-25, 20M-38

2-Jaw Precision Parallel Grippers | Dimensions and Technical Specifications

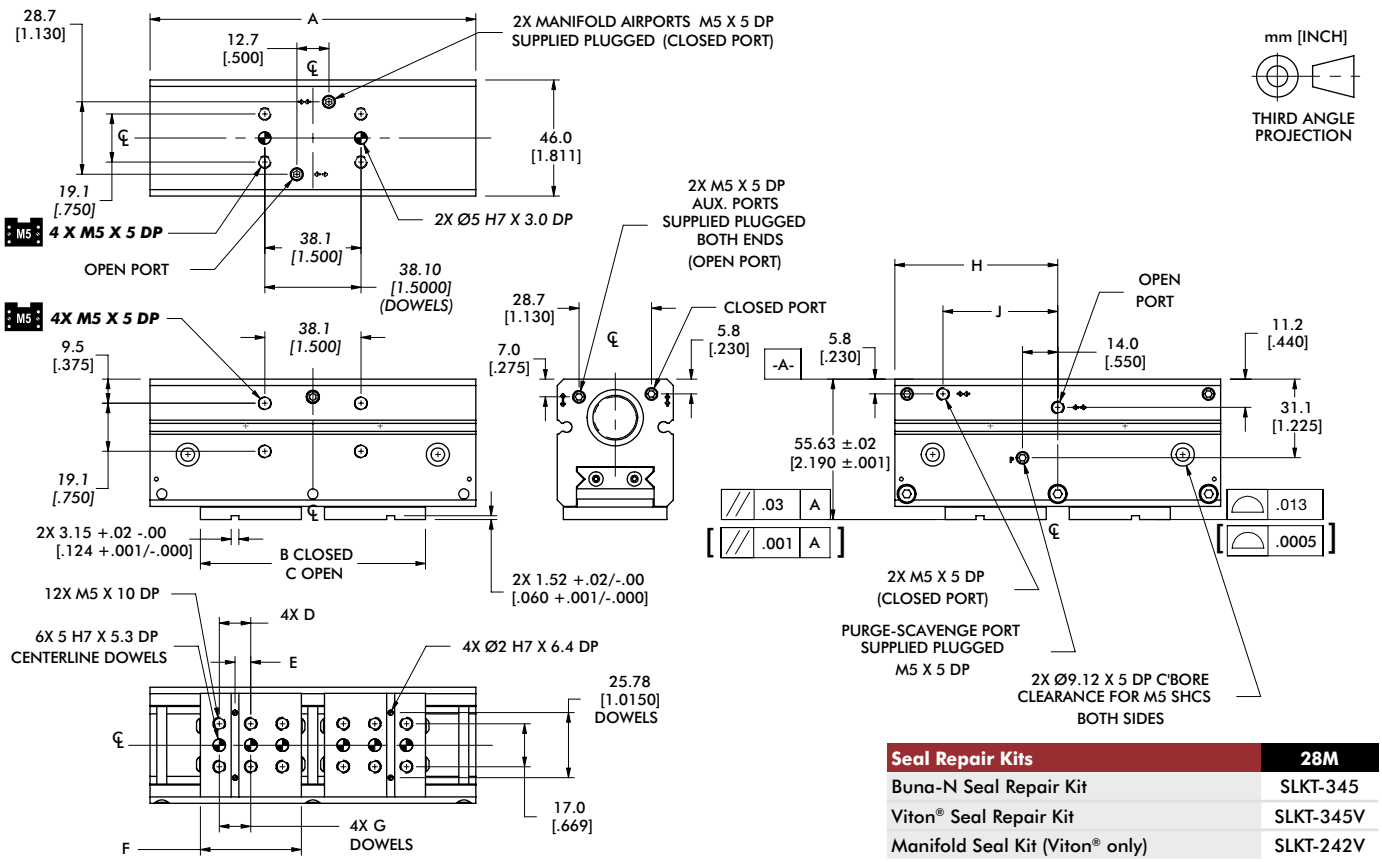

Seal Repair Kits	28M
Buna-N Seal Repair Kit	SLKT-345
Viton® Seal Repair Kit	SLKT-345V
Manifold Seal Kit (Viton® only)	SLKT-242V

Model	A	B	C	D	E	F	G	H	J
DPP-20M-25	129.0 [5.080]	89 [3.51]	115 [4.51]	12.5 [0.492]	6.2 [0.246]	40.0 [1.575]	12.50 [0.4920]	64.5 [2.540]	45.5 [1.790]
DPP-20M-38	175.5 [6.910]	123 [4.85]	161 [6.35]	16.0 [0.630]	8.0 [0.315]	58.0 [2.283]	16.00 [0.6300]	87.8 [3.455]	68.7 [2.705]

Dimensions in mm [in]

Loading Information

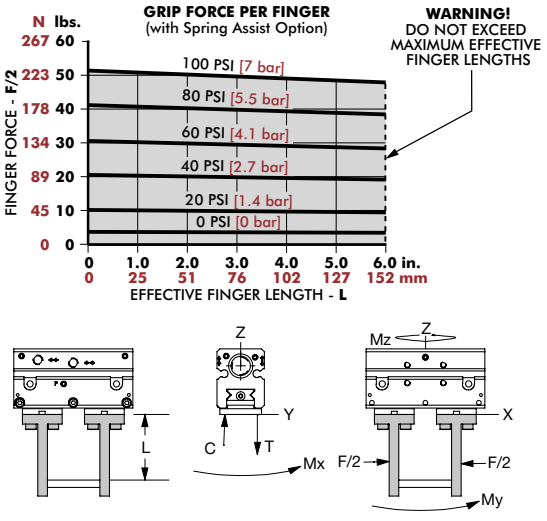

DPP-20M-25	Static	Dynamic
Maximum Tensile **T**	667 N [150 lbs]	222 N [50 lbs]
Maximum Compressive **C**	667 N [150 lbs]	222 N [50 lbs]
Maximum Moment M_x	34 Nm [300 in-lbs]	11 Nm [100 in-lbs]
Maximum Moment **My**	40 Nm [350 in-lbs]	13 Nm [117 in-lbs]
Maximum Moment M_z	34 Nm [300 in-lbs]	11 Nm [100 in-lbs]

†Capacities are per set of jaws and are not simultaneous

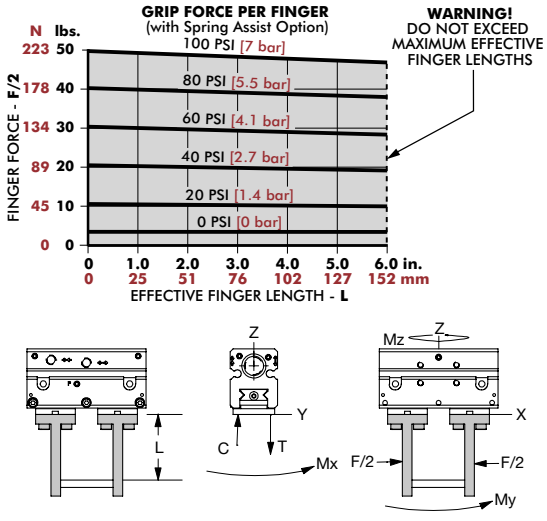

DPP-20M-38	Static	Dynamic
Maximum Tensile **T**	890 N [200 lbs]	298 N [67 lbs]
Maximum Compressive **C**	890 N [200 lbs]	298 N [67 lbs]
Maximum Moment M_x	45 Nm [400 in-lbs]	15 Nm [133 in-lbs]
Maximum Moment **My**	51 Nm [450 in-lbs]	17 Nm [150 in-lbs]
Maximum Moment M_z	45 Nm [400 in-lbs]	15 Nm [133 in-lbs]

†Capacities are per set of jaws and are not simultaneous

Dimensions and technical information are subject to change without notice

DPP-28M-31, 28M-50

2-Jaw Precision Parallel Grippers | Dimensions and Technical Specifications

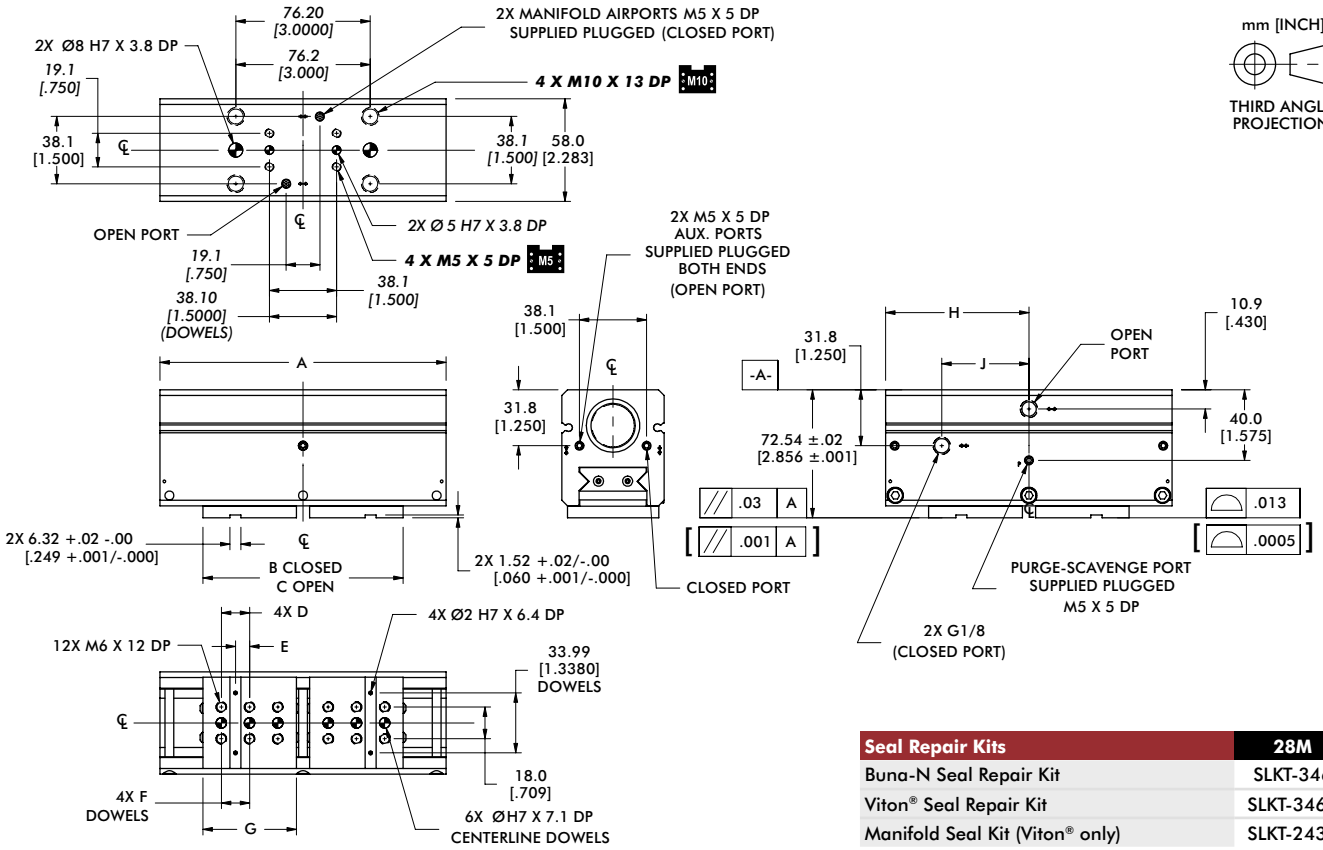

Seal Repair Kits	28M
Buna-N Seal Repair Kit	SLKT-346
Viton® Seal Repair Kit	SLKT-346V
Manifold Seal Kit (Viton® only)	SLKT-243V

Model	A	B	C	D	E	F	G	H	J
DPP-28M-31	162.3 [6.390]	114 [4.47]	145 [5.72]	16.0 [0.630]	8.0 [0.315]	16.00 [0.6300]	53.0 [2.087]	81.2 [3.195]	49.4 [1.945]
DPP-28M-50	221.5 [8.720]	153 [6.04]	204 [8.04]	25.0 [0.984]	12.5 [0.492]	25.00 [0.9840]	73.0 [2.874]	110.7 [4.360]	79.0 [3.110]

Dimensions in mm [in]

Loading Information

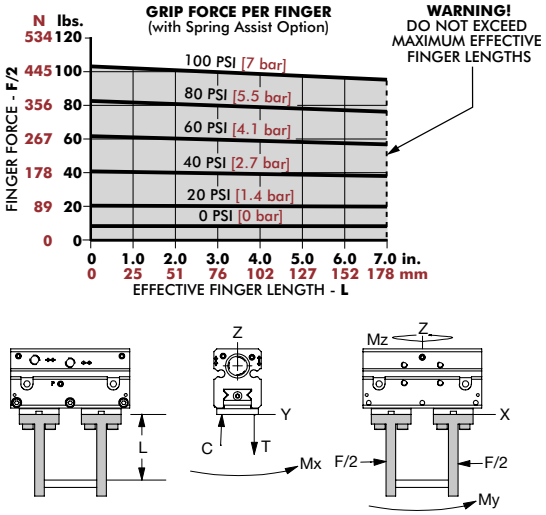

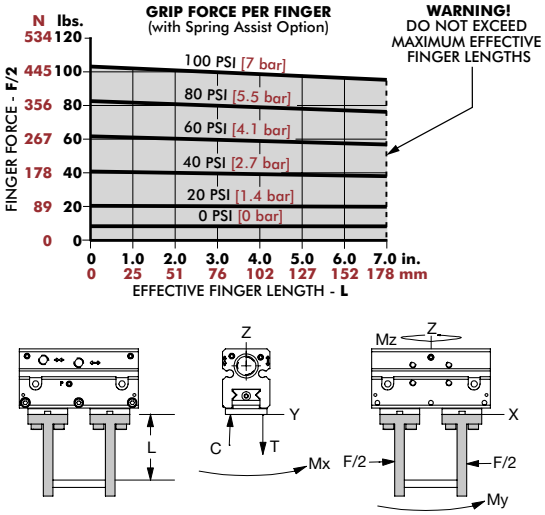

DPP-28M-31	Static	Dynamic
Maximum Tensile **T**	1001 N [225 lbs]	334 N [75 lbs]
Maximum Compressive **C**	1001 N [225 lbs]	334 N [75 lbs]
Maximum Moment $\mathbf{M_X}$	64 Nm [570 in-lbs]	21 Nm [190 in-lbs]
Maximum Moment **My**	77 Nm [685 in-lbs]	26 Nm [228 in-lbs]
Maximum Moment $\mathbf{M_Z}$	64 Nm [570 in-lbs]	21 Nm [190 in-lbs]

†Capacities are per set of jaws and are not simultaneous

DPP-28M-50	Static	Dynamic
Maximum Tensile **T**	1379 N [310 lbs]	458 N [103 lbs]
Maximum Compressive **C**	1379 N [310 lbs]	458 N [103 lbs]
Maximum Moment $\mathbf{M_X}$	89 Nm [785 in-lbs]	30 Nm [262 in-lbs]
Maximum Moment **My**	106 Nm [940 in-lbs]	35 Nm [313 in-lbs]
Maximum Moment $\mathbf{M_Z}$	89 Nm [785 in-lbs]	30 Nm [262 in-lbs]

†Capacities are per set of jaws and are not simultaneous

RP-P SERIES

2-Jaw Precision Parallel Grippers | Features and Benefits | How To Order

Features:

- Precision gripper with excellent part position repeatability
- Rack and pinion design for precise jaw synchronization
- Low friction and smooth operation with Dual-V roller bearings
- Maintenance free lubricated cylinder and drive mechanism
- Zero side play and maximum jaw support with preloaded bearings
- Supports up to two sensing positions

Applications:

- Delicate part handling applications
- Highly repeatable and precise gripping
- Clean application environments



How To Order

Base Model	Size	Seals	Description
RP	50P	"Blank"	Buna-N
	100P	V	Viton® High Temperature
	25P		
	35P		
	40P		
	43P		

RP - [Size] - [Metric] - [Seals]

Metric	Description
"Blank"	Imperial
M	Metric

Accessories

Sensor Accessories	Model Numbers	Part Number	Qty/Unit
3mm NPN Inductive Sensor with Quick Disconnect*	RP-50P	OISN-019	1-2
3mm PNP Inductive Sensor with Quick Disconnect*	RP-50P	OISP-019	1-2
4mm NPN Inductive Sensor with Quick Disconnect*	RP-100P, -25P, RP-50P, -110P, -25P	OISN-014	1-2
4mm PNP Inductive Sensor with Quick Disconnect*	RP-100P, -25P, RP-50P, -110P, -25P	OISP-014	1-2
Inductive Sensor Mounting Kit for (mounts 2 sensors)	See Datasheet		1
Quick Disconnect 2 Meter Cable Length*	All Models	CABL-010	1-2
Quick Disconnect 5 Meter Cable Length*	All Models	CABL-013	1-2

Pneumatic Accessories	Model Numbers	Part Number	Qty/Unit
Fail Safe Valve (Imperial)	RP-50P, -110P, -25P	OFSV-001	1
Fail Safe Valve (Metric)	RP-50P, -110P, -25P	OFSV-004	1
Fail Safe Valve (Imperial)	RP-35P, -40P, -43P	OFSV-002	1
Fail Safe Valve (Metric)	RP-50P, -110P, -25P	OFSV-005	1
Stroke Limited Opening Valve (LTD)	RP-35P, -40P, -43P	OLTD-001	1
Stroke Limited Opening Valve (LTD)	RP-50P, -110P, -25P	OLTD-002	1

*Sensor and cable sold separately.

Specifications	Units	50P	100P	25P	35P	40P	43P
Total Rated Grip Force **F** @ 100 psi [7 bar]	N [lb]	107 [24]	160 [36]	356 [80]	778 [175]	890 [200]	2224 [500]
Total Stroke	mm [in]	12.7 [0.50]	25.4 [1.00]	28.7 [1.13]	25.4 [1.00]	50.8 [2.00]	76.2 [3.00]
Weight	kg [lbs]	0.14 [0.31]	0.23 [0.50]	0.45 [1.0]	1.6 [3.5]	2.7 [6.0]	7.3 [16]
Pressure Range	bar [psi]	0.3-7 [5-100]					
Ingress Protection Class (IP)		IP 33					
Displacement	cm^3 [in^3]	1.64 [0.100]	3.6 [0.220]	8.2 [0.500]	17.0 [1.036]	28.0 [1.710]	120.6 [7.360]
Temperature Range (Buna-N seals)	°C [°F]	-35°~80° [-30°~180°]					
Temperature Range (Viton® seals)	°C [°F]	-30°~120° [-20°~250°]					
Actuation (open/close)	sec	0.14	0.18	0.20	0.33	0.39	0.59
Accuracy	mm [in]	±0.03 [±0.001]				±0.05 [±0.002]	
Repeatability	mm [in]	±0.01 [±0.0005]				±0.03 [±0.001]	
Valve to Actuate Double Acting		4-way, 2-position					

RP-50P

2-Jaw Precision Parallel Grippers | Dimensions and Technical Specifications

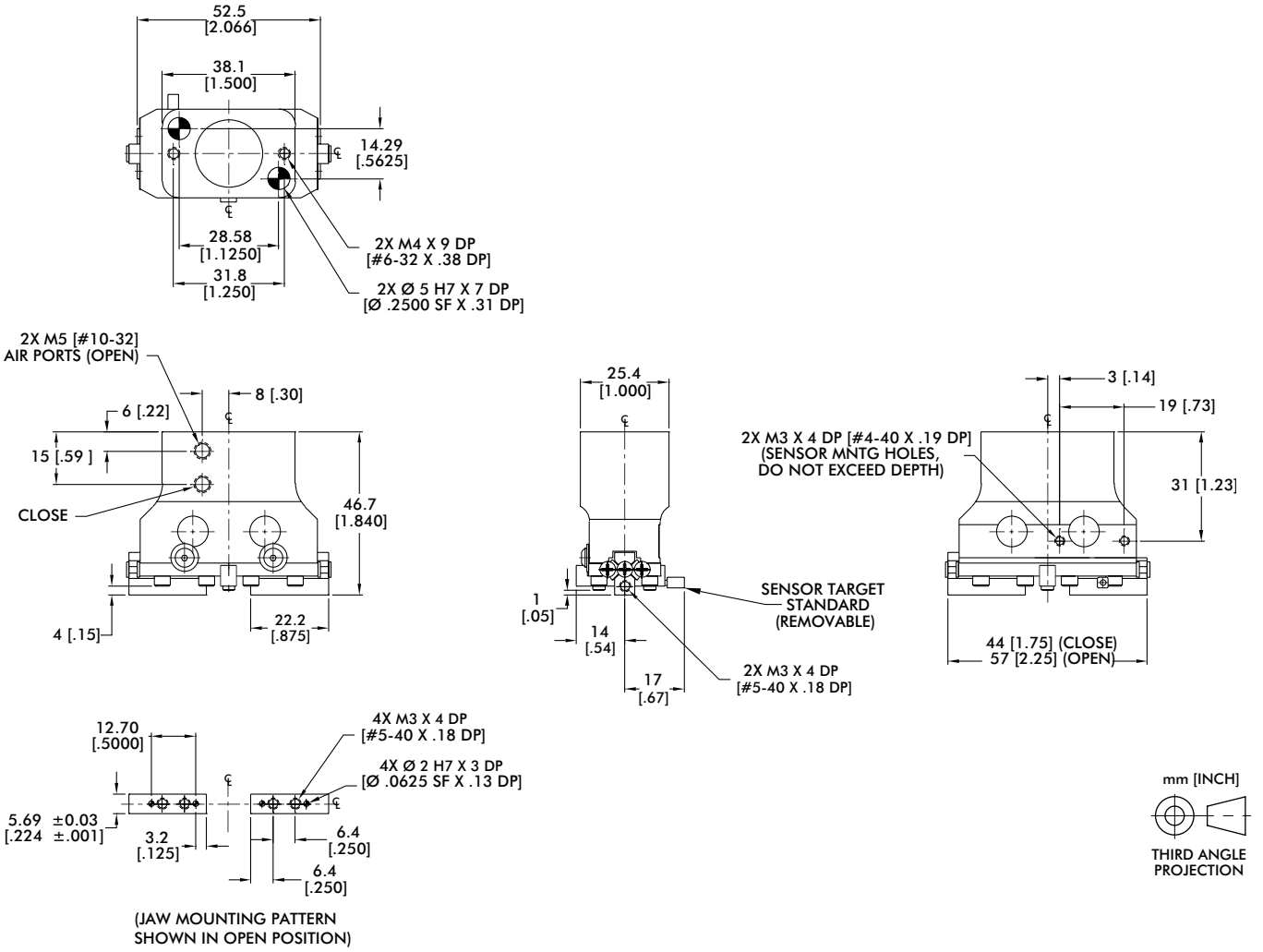

Sensor Accessories	RP-50P
Inductive Sensor Mounting Kit for (mounts 2 sensors)	OSMK-003

Seal Repair Kits	RP-50P
Buna-N Seal Repair Kit	SLKT-053
Viton® Seal Repair Kit	SLKT-053V

Loading Information

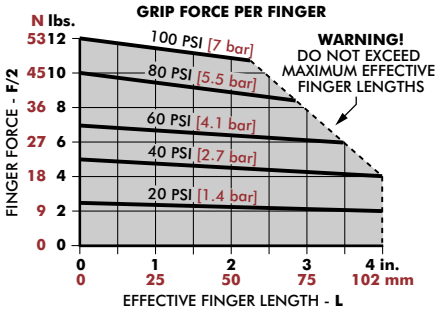

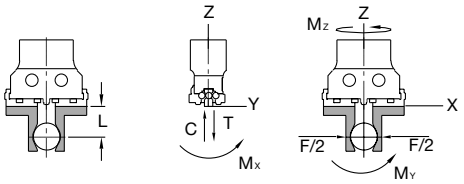

RP-50P	Static	Dynamic
Maximum Tensile **T**	222 N [50 lbs]	67 N [15 lbs]
Maximum Compressive **C**	222 N [50 lbs]	67 N [15 lbs]
Maximum Moment **Mx**	6 Nm [50 in-lbs]	1 Nm [12 in-lbs]
Maximum Moment **My**	7 Nm [60 in-lbs]	2 Nm [15 in-lbs]
Maximum Moment **Mz**	6 Nm [50 in-lbs]	1 Nm [12 in-lbs]

†Capacities are per set of jaws and are not simultaneous

2-Jaw Precision Parallel Grippers | Dimensions and Technical Specifications

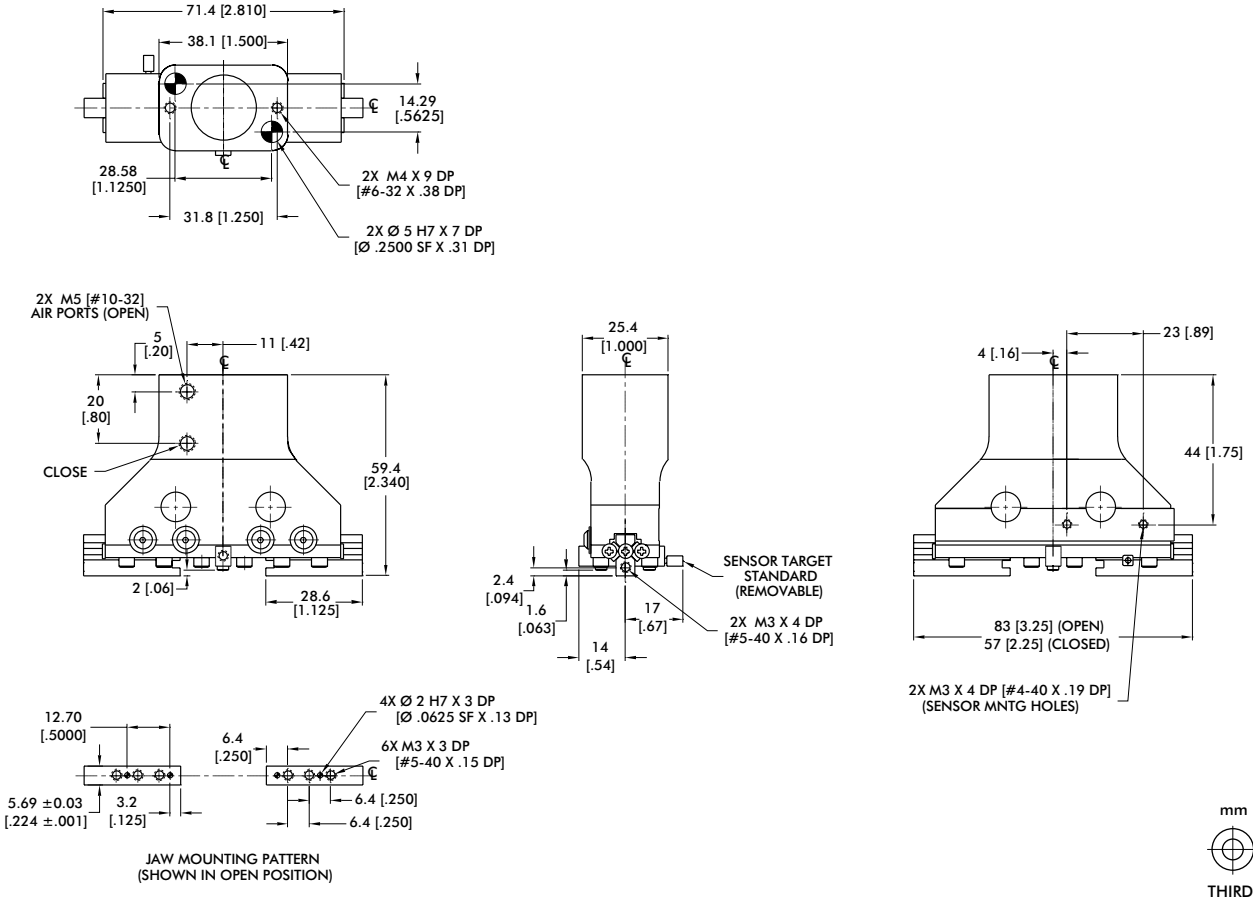

Sensor Accessories	RP-100P
Inductive Sensor Mounting Kit for (mounts 2 sensors)	OSMK-004

Seal Repair Kits	RP-50P
Buna-N Seal Repair Kit	SLKT-037
Viton® Seal Repair Kit	SLKT-037V

Loading Information

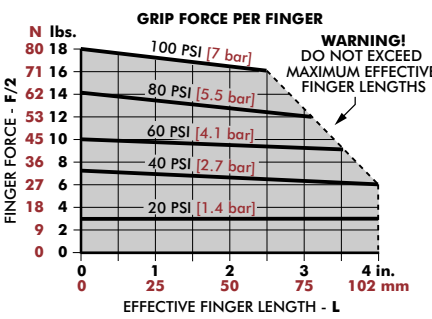

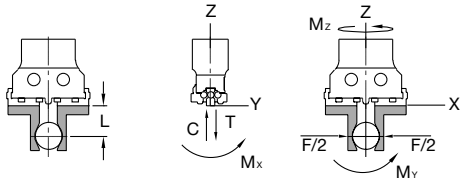

RP-100P	Static	Dynamic
Maximum Tensile **T**	267 N [60 lb]	89 N [20 lb]
Maximum Compressive **C**	267 N [60 lb]	89 N [20 lb]
Maximum Moment $\mathbf{M_x}$	11 Nm [100 in-lb]	3 Nm [25 in-lb]
Maximum Moment $\mathbf{M_y}$	14 Nm [120 in-lb]	3 Nm [30 in-lb]
Maximum Moment $\mathbf{M_z}$	11 Nm [100 in-lb]	3 Nm [25 in-lb]

†Capacities are per set of jaws and are not simultaneous

RP-25P

2-Jaw Precision Parallel Grippers | Dimensions and Technical Specifications

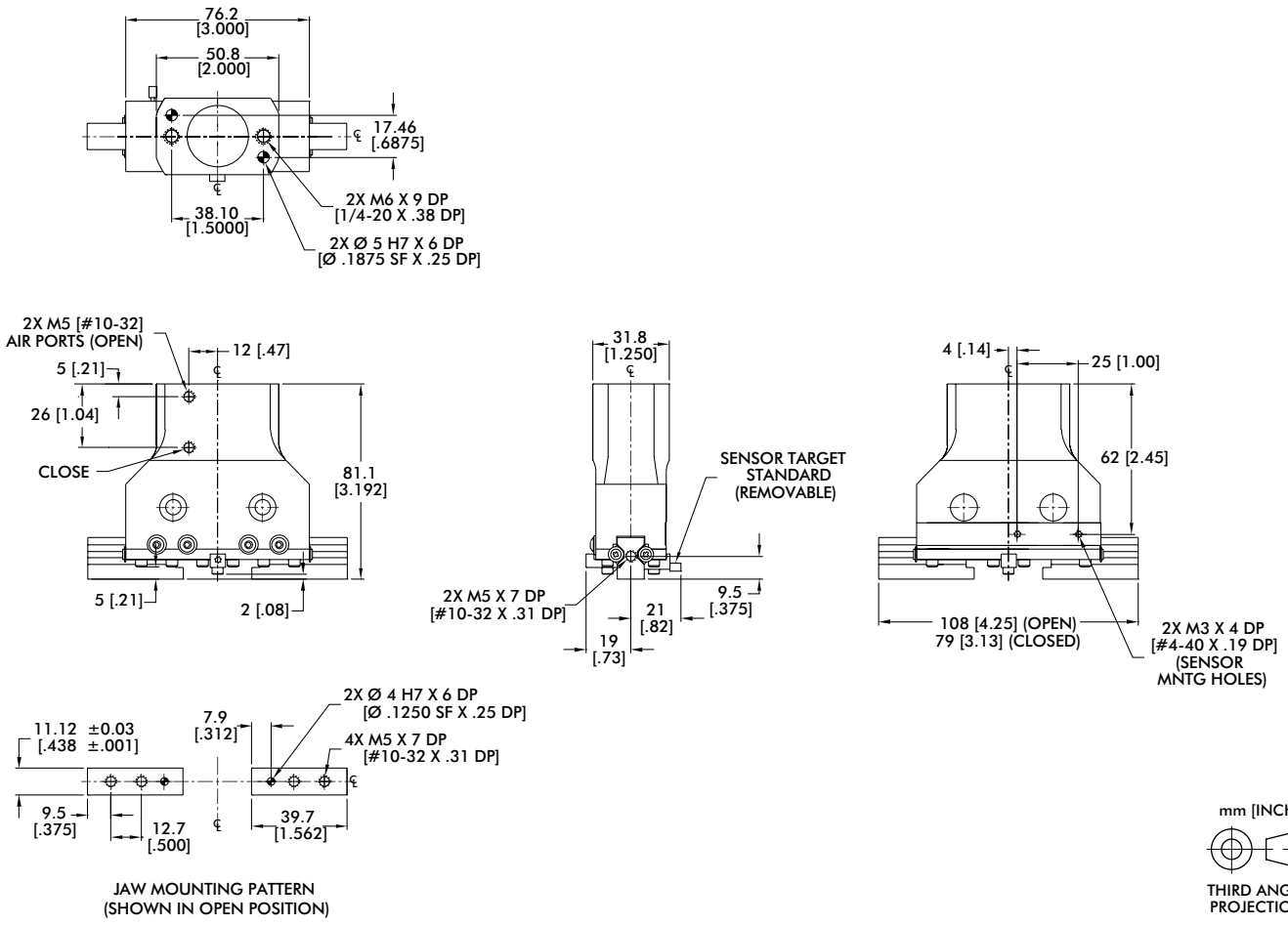

Sensor Accessories	RP-25P
Inductive Sensor Mounting Kit for (mounts 2 sensors)	OSMK-004

Seal Repair Kits	RP-25P
Buna-N Seal Repair Kit	SLKT-046
Viton® Seal Repair Kit	SLKT-046V

Loading Information

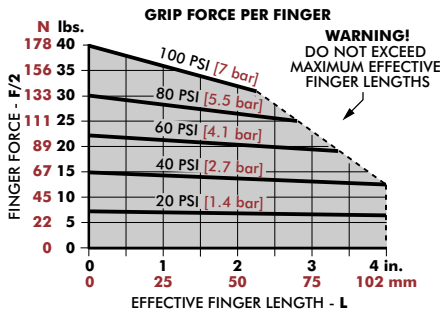

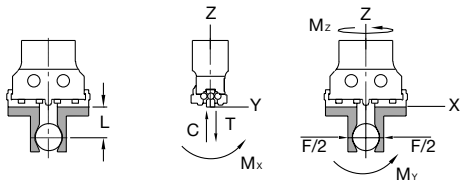

RP-25P	Static	Dynamic
Maximum Tensile **T**	445 N [100 lbs]	133 N [30 lbs]
Maximum Compressive **C**	445 N [100 lbs]	133 N [30 lbs]
Maximum Moment M_x	23 Nm [200 in-lbs]	6 Nm [50 in-lb]
Maximum Moment M_y	28 Nm [250 in-lbs]	7 Nm [60 in-lbs]
Maximum Moment M_z	23 Nm [200 in-lbs]	6 Nm [50 in-lbs]

†Capacities are per set of jaws and are not simultaneous

Dimensions and technical information are subject to change without notice

2-Jaw Precision Parallel Grippers | Dimensions and Technical Specifications

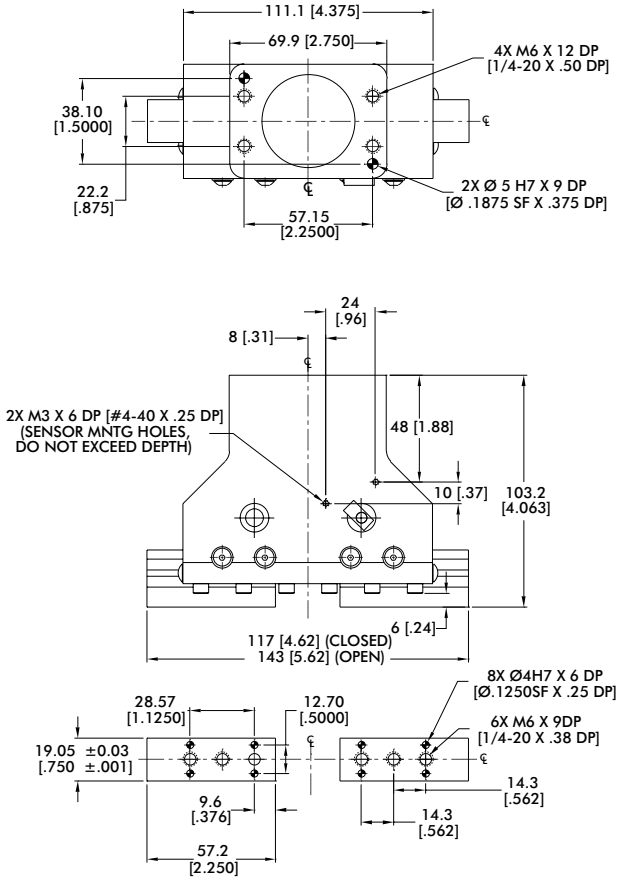

JAW MOUNTING PATTERN (SHOWN IN OPEN POSITION)

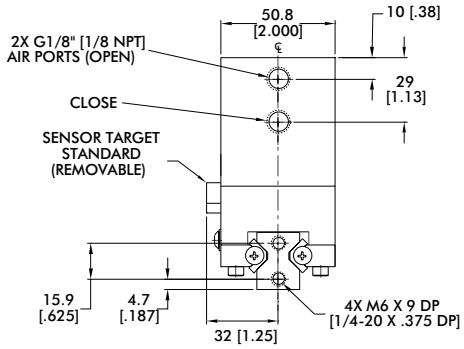

mm [INCH]

THIRD ANGLE PROJECTION

Sensor Accessories	RP-35P
Inductive Sensor Mounting Kit for (mounts 2 sensors)	OSMK-023

Seal Repair Kits	RP-35P
Buna-N Seal Repair Kit	SLKT-049
Viton® Seal Repair Kit	SLKT-049V

Loading Information

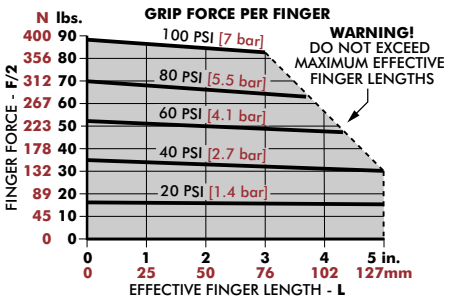

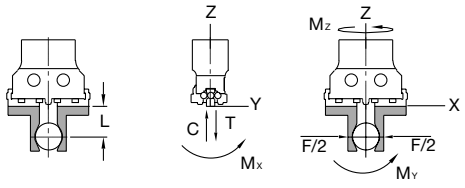

RP-35P	Static	Dynamic
Maximum Tensile **T**	890 N [200 lb]	334 N [75 lb]
Maximum Compressive **C**	890 N [200 lb]	334 N [75 lb]
Maximum Moment $\mathbf{M_x}$	57 Nm [500 in-lb]	14 Nm [125 in-lb]
Maximum Moment $\mathbf{M_y}$	68 Nm [600 in-lb]	17 Nm [150 in-lb]
Maximum Moment $\mathbf{M_z}$	57 Nm [500 in-lb]	14 Nm [125 in-lb]

†Capacities are per set of jaws and are not simultaneous

RP-40P

2-Jaw Precision Parallel Grippers | Dimensions and Technical Specifications

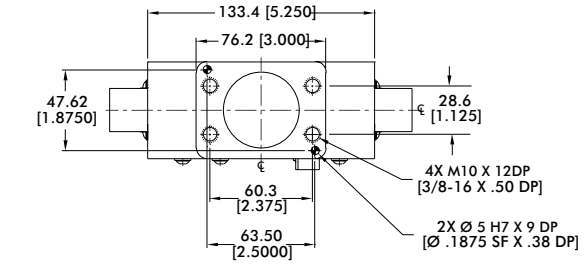

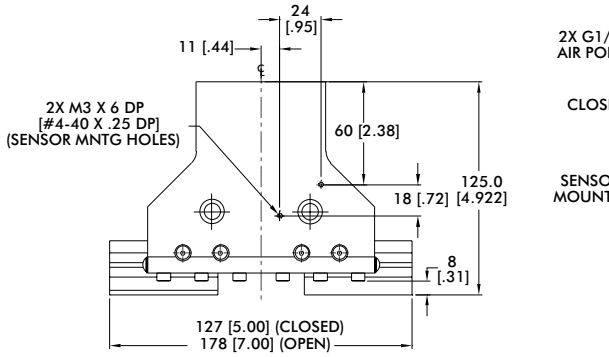

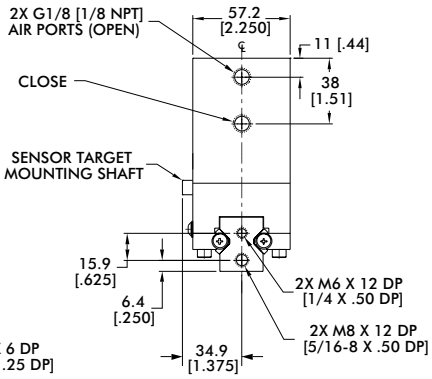

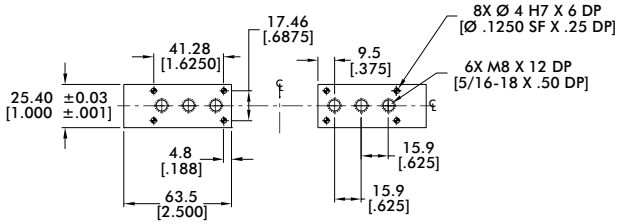

JAW MOUNTING PATTERN (SHOWN IN OPEN POSITION)

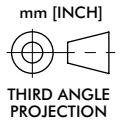

Sensor Accessories	RP-40P
Inductive Sensor Mounting Kit for (mounts 2 sensors)	OSMK-023

Seal Repair Kits	RP-40P
Buna-N Seal Repair Kit	SLKT-050
Viton® Seal Repair Kit	SLKT-050V

Loading Information

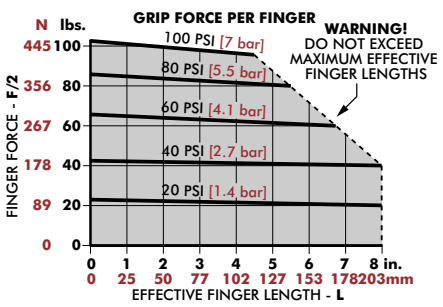

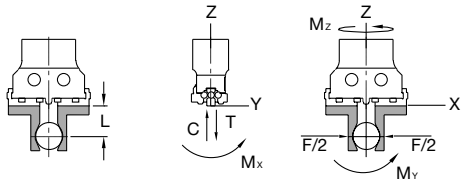

RP-40P	Static	Dynamic
Maximum Tensile **T**	1779 N [400 lb]	667 N [150 lb]
Maximum Compressive **C**	1779 N [400 lb]	667 N [150 lb]
Maximum Moment **Mx**	113 Nm [1000 in-lb]	28 Nm [250 in-lb]
Maximum Moment **My**	136 Nm [1200 in-lb]	34 Nm [300 in-lb]
Maximum Moment **Mz**	113 Nm [1000 in-lb]	28 Nm [250 in-lb]

†Capacities are per set of jaws and are not simultaneous

2-Jaw Precision Parallel Grippers | Dimensions and Technical Specifications

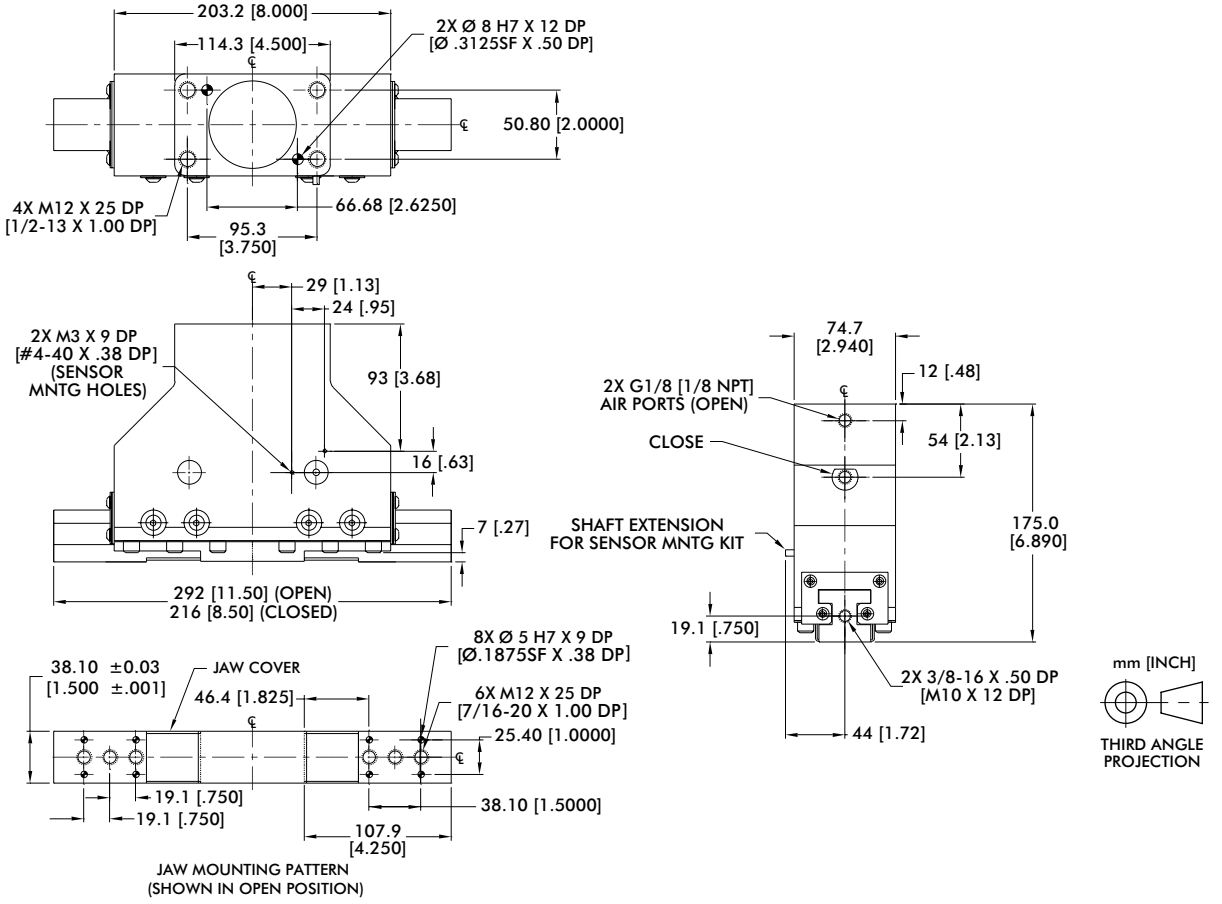

Sensor Accessories	RP-43P
Inductive Sensor Mounting Kit for (mounts 2 sensors)	OSMK-023

Seal Repair Kits	RP-43P
Buna-N Seal Repair Kit	SLKT-051
Viton® Seal Repair Kit	SLKT-051V

Loading Information

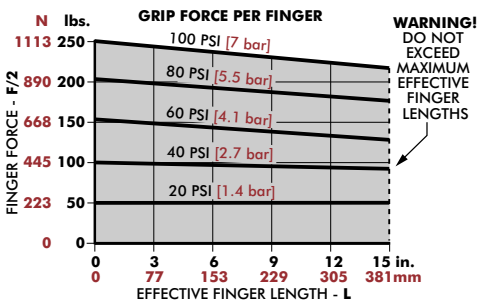

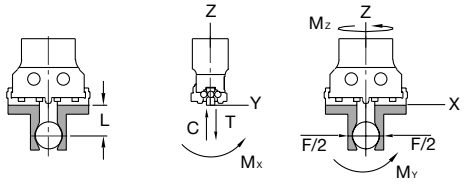

RP-43P	Static	Dynamic
Maximum Tensile **T**	4448 N [1000 lb]	1557 N [350 lb]
Maximum Compressive **C**	4448 N [1000 lb]	1557 N [350 lb]
Maximum Moment M_x	283 Nm [2500 in-lb]	57 Nm [500 in-lb]
Maximum Moment M_y	339 Nm [3000 in-lb]	68 Nm [600 in-lb]
Maximum Moment M_z	283 Nm [2500 in-lb]	57 Nm [500 in-lb]

†Capacities are per set of jaws and are not simultaneous

RPL/RPLC SERIES

2-Jaw Precision Parallel Grippers | Features and Benefits | How To Order

Features:

- Excellent part positioning and repeatability
- Zero side play using low friction Dual-V roller bearings
- Class 10 rated clean-room (RPLC) fits life Sciences applications
- Low friction for operation in low pressure applications, corrosion resistant design (RPLC)
- Optional non-synchronous jaw operation
- 30°C to +150°C [-20°F to +300°F] operating environment using Viton® seals option
- Purge port (RPLC) to prevent contaminants entering gripper
- Scavenge port (RPLC) prevents gripper grease from contaminating working environment

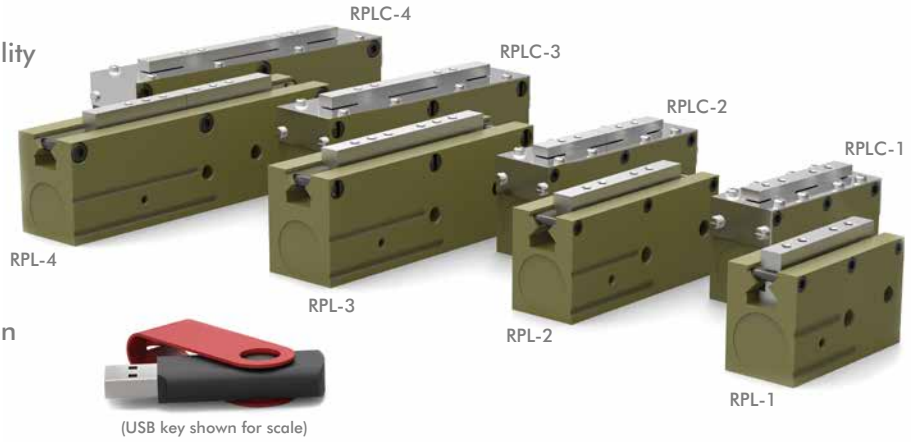

Applications:

- Clean room and harsh environments (RPLC)
- Delicate part handling with valve controls
- Long gripper finger requirements with precision
- High temperature applications using Viton® sveals

How To Order

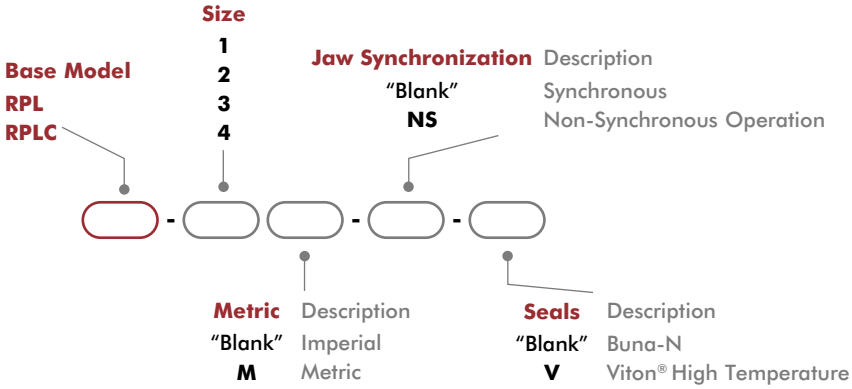

Accessories

Sensor Accessories	Model Numbers	Part Number	Qty/Unit
Sensor Mounting Kit for Imperial & Metric Units (mounts 2 sensors)	All Models	OSMK-008	1
NPN Magneto Resistive Sensor with Quick Disconnect*	All Models	OHSN-017	1-2
PNP Magneto Resistive Sensor with Quick Disconnect*	All Models	OHSP-017	1-2
Quick Disconnect 2 Meter Cable Length*	All Models	CABL-010	1-2
Quick Disconnect 5 Meter Cable Length*	All Models	CABL-013	1-2

Pneumatic Accessories	Model Numbers	Part Number	Qty/Unit
Fail Safe Valve (Imperial)	All Models	OFSV-001	1
Fail Safe Valve (Metric)	All Models	OFSV-004	1

*Sensor and cable sold separately.

2-Jaw Precision Parallel Grippers | Technical Specifications

Specifications	Units	1	2	3	4
Total Rated Grip Force **F** @ 100 psi [7 bar]	N [lb]	116 [26]		160 [36]	
Total Stroke	mm [in]	6.4 [0.25]	12.7 [0.50]	19.1 [0.75]	25.4 [1.00]
Weight	kg [lbs]	0.07 [0.16]	0.09 [0.20]	0.15 [0.32]	0.17 [0.38]
Pressure Range	bar [psi]	0.3-7 [5-100]			
Ingress Protection Class (IP)		IP 33 (RPL) / IP64 (RPLC)			
Displacement	cm^3 [in^3]	0.6 [0.038]	1.2 [0.075]	2.4 [0.147]	3.2 [0.196]
Temperature Range (Buna-N seals)	°C [°F]	-35°~80° C [-30°~180° F]			
Temperature Range (Viton® seals)	°C [°F]	-30°~120° C [-20°~250° F]			
Actuation (open/close)	sec	0.10	0.13	0.14	0.19
Accuracy	mm [in]	±0.05 [±0.002]			
Repeatability	mm [in]	±0.03 [±0.001]			
Valve to Actuate		4-way, 2-position			

RPL/RPLC-1, RPL/RPLC-2

2-Jaw Precision Parallel Grippers | Dimensions and Technical Specifications

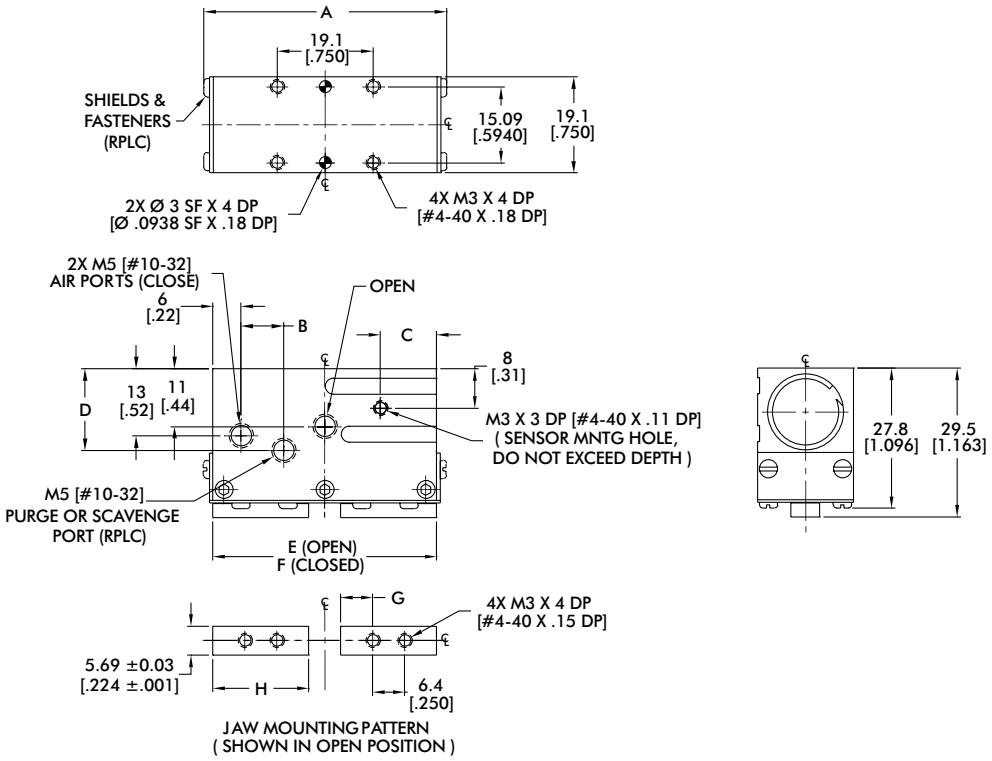

mm [INCH]

THIRD ANGLE PROJECTION

Model	A	B	C	D	E	F	G	H
RPL-1	44.5 [1.750]	--	11 [0.45]	--	44 [1.75]	38 [1.50]	6.4 [0.250]	19.1 [0.750]
RPL-2	59.5 [2.344]	--	16 [0.62]	--	57 [2.25]	44 [1.75]	6.4 [0.250]	22.2 [0.875]

Model	A	B	C	D	E	F	G	H
RPLC-1	48.3 [1.900]	8 [0.33]	11 [0.44]	17.3 [0.68]	44 [1.75]	38 [1.50]	6.4 [0.250]	19.1 [0.750]
RPLC-2	62.9 [2.476]	13 [0.50]	16 [0.62]	17.3 [0.68]	59 [2.33]	46 [1.83]	8.3 [0.328]	23.2 [0.913]

Dimensions in mm [in]

Seal Repair Kits	1, 2
Buna-N Seal Repair Kit	SLKT-010
Viton® Seal Repair Kit	SLKT-010V

Loading Information

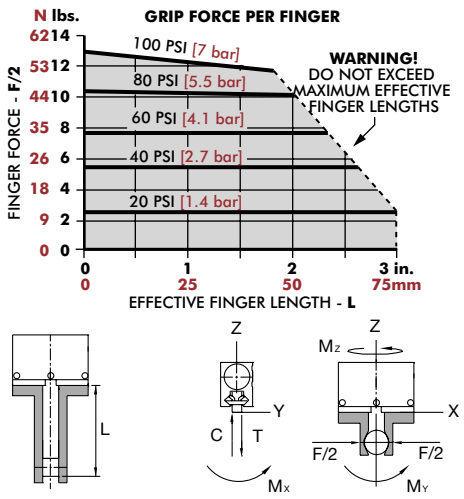

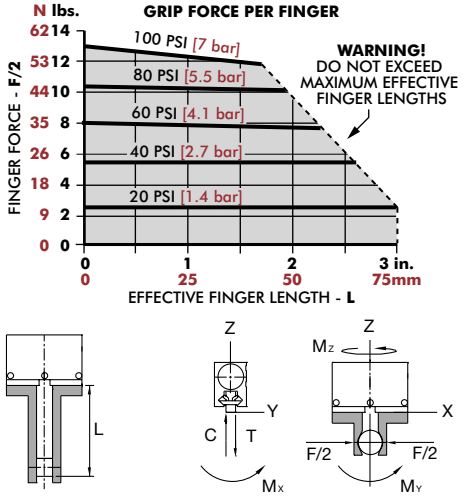

RPL-1	Static	Dynamic
Maximum Tensile **T**	222 N [50 lbs]	67 N [15 lbs]
Maximum Compressive **C**	222 N [50 lbs]	67 N [15 lbs]
Maximum Moment M_x	3.4 Nm [30 in-lbs]	1.1 Nm [10 in-lbs]
Maximum Moment M_y	4.5 Nm [40 in-lbs]	1.4 Nm [12 in-lbs]
Maximum Moment M_z	3.4 Nm [30 in-lbs]	1.1 Nm [10 in-lbs]

†Capacities are per set of jaws and are not simultaneous

RPL-2	Static	Dynamic
Maximum Tensile **T**	289 N [65 lbs]	89 N [0 lbs]
Maximum Compressive **C**	289 N [65 lbs]	89 N [20 lbs]
Maximum Moment M_x	5.1 Nm [45 in-lbs]	1.7 Nm [15 in-lbs]
Maximum Moment M_y	6.8 Nm [60 in-lbs]	2.3 Nm [20 in-lbs]
Maximum Moment M_z	5.1 Nm [45 in-lbs]	1.7 Nm [15 in-lbs]

†Capacities are per set of jaws and are not simultaneous

Dimensions and technical information are subject to change without notice

RPL/RPLC-3, RPL/RPLC-4

2-Jaw Precision Parallel Grippers | Dimensions and Technical Specifications

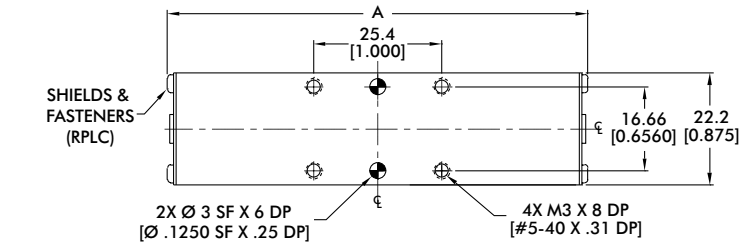

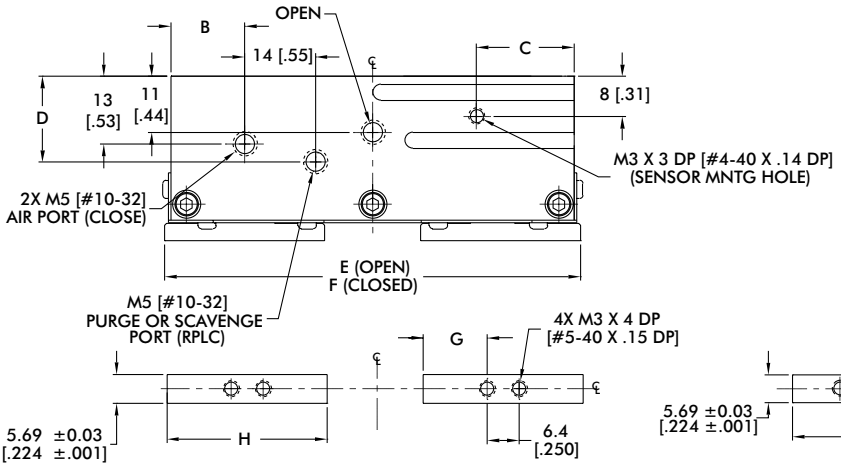

RPLC JAW MOUNTING PATTERN
(SHOWN IN OPEN POSITION)

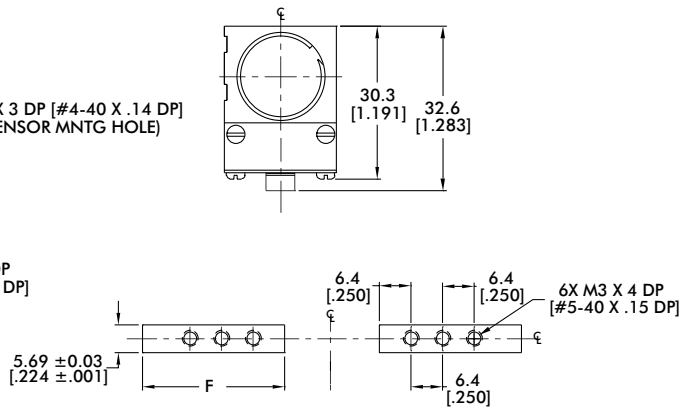

RPL JAW MOUNTING PATTERN
(SHOWN IN OPEN POSITION)

mm [INCH]

THIRD ANGLE
PROJECTION

Model	A	B	C	D	E	F	G	H
RPL-3	80 [3.150]	15 [0.58]	19 [0.76]	--	76 [3.00]	57 [2.25]	--	28.6 [1.125]
RPL-4	98.4 [3.875]	30 [1.19]	25 [1.00]	--	92 [3.63]	66 [2.63]	--	33.3 [1.313]

Model	A	B	C	D	E	F	G	H
RPLC-3	83.4 [3.282]	15 [1.58]	19 [0.76]	18 [0.74]	83 [3.25]	63 [2.50]	12.7 [0.500]	31.8 [1.250]
RPLC-4	101.8 [4.007]	24 [0.94]	25 [1.00]	18 [0.74]	101 [4.00]	76 [3.00]	15.9 [0.625]	38.1 [1.50]

Dimensions in mm [in]

Seal Repair Kits	3, 4
Buna-N Seal Repair Kit	SLKT-012
Viton® Seal Repair Kit	SLKT-012V

Loading Information

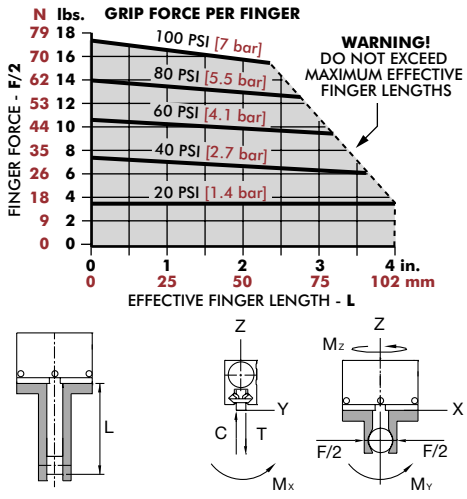

RPL-3	Static	Dynamic
Maximum Tensile **T**	400 N [90 lbs]	133 N [30 lbs]
Maximum Compressive **C**	400 N [90 lbs]	133 N [30 lbs]
Maximum Moment M_x	6.8 Nm [60 in-lbs]	2.3 Nm [20 in-lbs]
Maximum Moment M_y	9.0 Nm [80 in-lbs]	2.8 Nm [25 in-lbs]
Maximum Moment M_z	6.8 Nm [60 in-lbs]	2.3 Nm [20 in-lbs]

†Capacities are per set of jaws and are not simultaneous

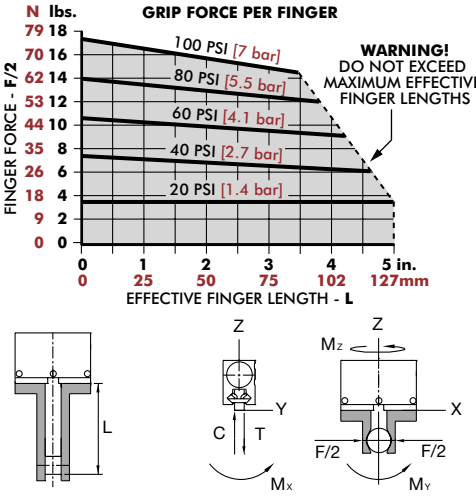

RPL-4	Static	Dynamic
Maximum Tensile **T**	534 N [120 lbs]	178 N [40 lbs]
Maximum Compressive **C**	534 N [120 lbs]	178 N [40 lbs]
Maximum Moment M_x	8.5 Nm [75 in-lbs]	2.8 Nm [25 in-lbs]
Maximum Moment M_y	11.3 Nm [100 in-lbs]	4.0 Nm [35 in-lbs]
Maximum Moment M_z	8.5 Nm [75 in-lbs]	2.8 Nm [25 in-lbs]

†Capacities are per set of jaws and are not simultaneous

PNEUMATIC INDUSTRIAL GRIPPERS

2-Jaw General Industrial Grippers | Product Overview

Model		Stroke mm [in]	Grip Force N [lbs]	Operating Environment	Special Features	Page GR-GEN-#
CP		4-32 [0.16-1.26]	60-2749 [13-618]	IP54	Compact Design with High Grip Force.	3
DPDL		3.2-19.1 [0.13-0.75]	62-1779 [14-400]	IP66 Using Purge Port & Boot Option. Clean Room Class 100, ISO 5 Using Scavenge Port	Sealed Gripper. Dirty and Caustic Environments. Wide Range of Sizes. DIRECT CONNECT	11
DPDS		4.8-50.8 [0.188-2]	62-1779 [14-400]	IP54 Using Purge Port. Clean Room Class 10, ISO 4 Using Scavenge Port	Rugged General Purpose Applications. Wide Range of Sizes. DIRECT CONNECT	19
DPG		6.35-25.4 [0.25-1.0]	222-249 [50-56]	IP54. Clean Room Class 100, ISO 5	8 Position Sensing General Purpose Gripper. Multiple Mounting/Porting Options. DIRECT CONNECT	27
RDH		4-70 [0.16-2.73]	361-28002 [81-6300]	IP55 Using Purge Port. Clean Room Class 100, ISO 5 Using Scavenge Port	Highest Force vs. Size & Weight. Wide Range of Sizes. High Precision. Long Fingers. Rugged Applications	31
REP2		10-30 [0.39-1.181]	480-3268 [108-753]	IP55. Class 100, ISO 5 Using Scavenge Port	Spring Assist. Rugged and Harsh Environments. High Precision.	41
RP		4.0-50.8 [0.16-2]	156-3336 [35-750]	IP43	Small General Purpose. Rugged Applications. Wide Range of Sizes. Cost Effective	47, 51
RPM		3.2-6.3 [0.13-0.25]	36 [8]	IP33	Smallest Gripper, Low Friction, Small Parts Handling.	59
RPMC		3.2-6.3 [0.13-0.25]	36 [8]	IP64 Using Purge Port. Clean Room Class 10, ISO 4 Using Scavenge Port	Smallest Shielded Gripper for Clean or Harsh Environments. Small Delicate Parts Handling.	59
RPS		4-43 [0.16-1.7]	222-2669 [50-600]	IP43	Spring Assist, General Purpose Gripper. Rugged Applications. Wide Range of Sizes. Cost Effective	63

Dimensions and technical information are subject to change without notice

PNEUMATIC INDUSTRIAL GRIPPERS

2-Jaw General Industrial Grippers | DIRECTCONNECT™ Mounting Combatabilty Chart

DIRECTCONNECT Modular Direct Mounting System without Adapter Plates

Products can be mounted in multiple positions. Refer to datasheet for complete info.

Slide to Gripper

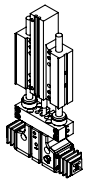

DLT Thruster Slide to DPDL Parallel Gripper

Slide to Gripper

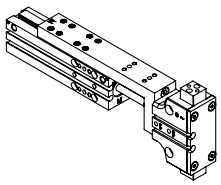

DLM Thruster Slide to DPDL Parallel Gripper

Slide to Gripper

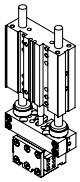

DLT Thruster Slide to DPDS Parallel Gripper

Slide to Gripper

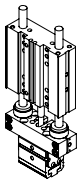

DLT Thruster Slide to DPDS Parallel Gripper

Slide to Gripper

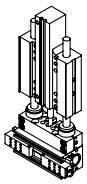

DLT Thruster Slide to DPG Parallel Gripper

Slide to Gripper

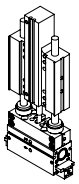

DLT Thruster Slide to DPG Parallel Gripper

DIRECTCONNECT™ Mounting Compatibility Chart

DESTACO's DIRECTCONNECT™ technology, allows all components of the system–grippers and slides—to be mounted together directly. Look for matching icons on product datasheets for mounting compatibility.

Note: The numbers in the cell represent the metric screw size and basic mounting pattern.
S=Square, R=Rectangle. ie; 5S = M5 Screw with square mounting pattern.

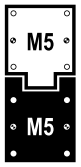

5S

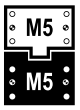

5R

Catalog Models		DPDS-047, 056	DPDS-088, 125	DPDS-175, 250	DPDL-047, 056	DPDL-088, 125	DPDL-175, 250	DPG
Base Slides	DLB-06,08		3R			3R		
	DLB-10,12,16	5R		5R			5R	5R
	DLB-20,25				10R			
Thruster Slides	DLT-06,08		3R			3R		
	DLT-10,12,16	5R	3R	5R		3R	5R	5R
	DLT-20,25	5R		5R	10R		5R	5R
	DLM-07		3R			3R		
	DLM-9,12	5R	3R	5R		3R	5R	5R

CP SERIES

2-Jaw General Industrial Grippers | Features and Benefits | How To Order

Features:

- Compact cam lever design general purpose square gripper
- Two jaw styles available, parallel or extended finger jaw
- Spring assist option for part retention in case of air pressure loss
- Standard and extended stroke option available
- Shielded design for harsh environments
- Magneto-resistive and Inductive sensing

Applications:

- OEM pick and place machines
- Packaging applications
- General purpose gripping

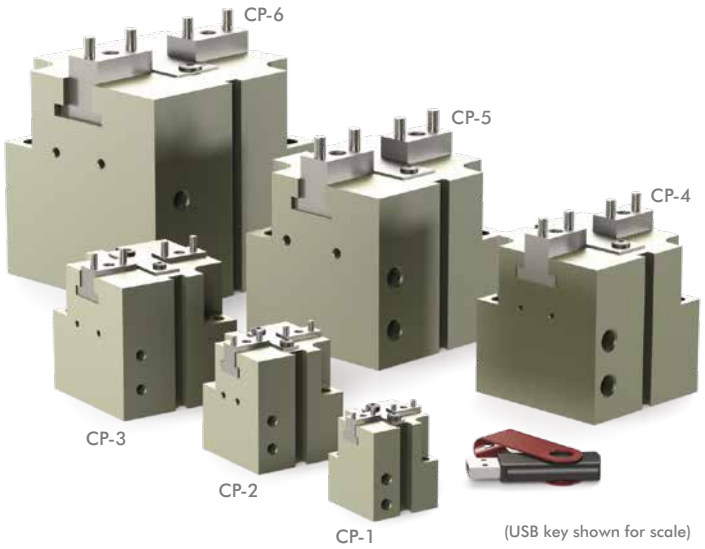

How To Order

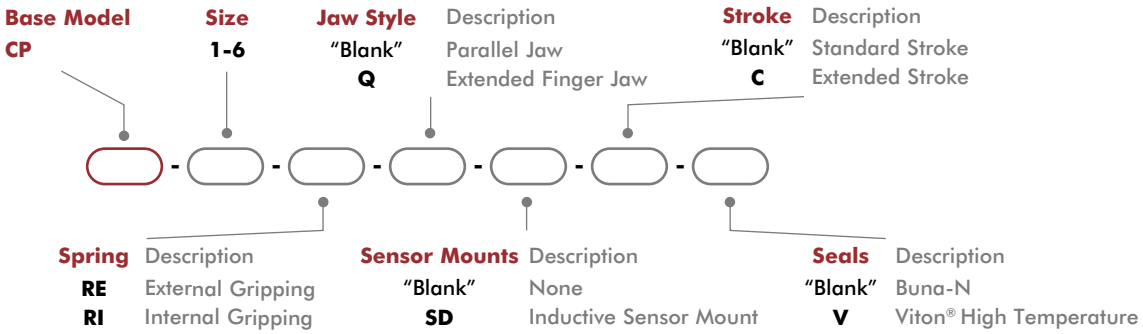

Accessories

Sensor Accessories	Model Numbers	Part Number	Qty/Unit
PNP Sensor with 0.3m Output Cable with 90° with M8 connector*	All Models	D1	1-2
NPN Sensor with 0.3m Output Cable with 90° with M8 connector*	CP-2, -3, -4, -5, -6	D10	1-2
PNP Sensor with 0.3m Output Cable with M8 connector*	All Models	D4	1-2
NPN Sensor with 0.3m Output Cable with M8 connector*	CP-2, -3, -4, -5, -6	D7	1-2
Inductive Sensor Mounting Kit (mounts 2 sensors) (**SD**)	See Datasheet		1
Inductive PNP Sensor with M8 Connector*	CP-2, -3, -4	OISP-011	1-2
Inductive NPN Sensor with M8 Connector*	CP-2, -3, -4	OISN-011	1-2
Inductive PNP Sensor with M12 Connector*	CP-5, -6	OISP-017	1-2
Inductive NPN Sensor with M12 Connector*	CP-5, -6	OISN-017	1-2
M8 Quick Disconnect 2 Meter Cable Length*	All Models	CABL-010	1-2
M12 Quick Disconnect 2 Meter Cable Length*	All Models	CABL-014	1-2

*Sensor and cable sold separately.

Specifications	Units	1	1-C	2	2-C	3	3-C
Total Rated Grip Force **F** @ 100 psi [7 bar] w/o Spring Assist	N [lbs]	89 [20]	60 [13]	238 [53]	161 [36]	677 [152]	407 [91]
Total Rated Grip Force **F** @ 100 psi [7 bar] with Spring Assist	N [lbs]	15 [3]	10 [2]	43 [10]	29 [7]	161 [36]	97 [22]
Total Stroke	mm [in]	4 [0.16]	6 [0.24]	6 [0.24]	9 [0.35]	10 [0.39]	16 [0.63]
Weight	kg [lbs]	0.09 [0.20]	0.09 [0.20]	0.21 [0.46]	0.20 [0.44]	0.45 [0.99]	0.47 [1.04]
Pressure Range w/o Spring	bar [psi]	2-10 [29-145]					
Pressure Range with Spring	bar [psi]	2.5-10 [36-145]					
Ingress Protection Class (IP)		IP54					
Displacement	cm^3 [in^3]	0.7 [0.04]		2.7 [0.16]		11.7 [0.71]	
Temperature Range	°C [°F]	-35°~80° [-30°~180°]					
Actuation (open/close)	sec	0.06				0.07	
Repeatability	mm [in]	±0.025 [±0.001]					
Valve to Actuate Single Acting		3-way, 2-position					
Valve to Actuate Double Acting		4-way, 2-position					

Specifications	Units	4	4-C	5	5-C	6	6-C
Total Rated Grip Force **F** @ 100 psi [7 bar] w/o Spring Assist	N [lbs]	1016 [228]	665 [149]	1591 [358]	1081 [243]	2749 [618]	2092 [470]
Total Rated Grip Force **F** @ 100 psi [7 bar] with Spring Assist	N [lbs]	222 [50]	145 [33]	322 [72]	219 [49]	711 [160]	541 [122]
Total Stroke	mm [in]	13 [0.51]	20 [0.79]	18 [0.71]	27 [1.06]	24 [0.94]	32 [1.26]
Weight	kg [lbs]	0.73 [1.61]	0.75 [1.65]	1.25 [2.76]	1.27 [2.80]	2.5 [5.51]	2.56 [5.64]
Pressure Range w/o Spring	bar [psi]	2-10 [29-145]					
Pressure Range with Spring	bar [psi]	2.5-10 [36-145]					
Ingress Protection Class (IP)		IP54					
Displacement	cm^3 [in^3]	24.2 [1.48]		53.5 [3.26]		114.8 [7.01]	
Temperature Range	°C [°F]	-35°~80° [-30°~180°]					
Actuation (open/close)	sec	0.07		0.09		0.12	
Repeatability	mm [in]	±0.025 [±0.001]					
Valve to Actuate Single Acting		3-way, 2-position					
Valve to Actuate Double Acting		4-way, 2-position					

CP-1, CP-1-C

2-Jaw General Industrial Grippers | Dimensions and Technical Specifications

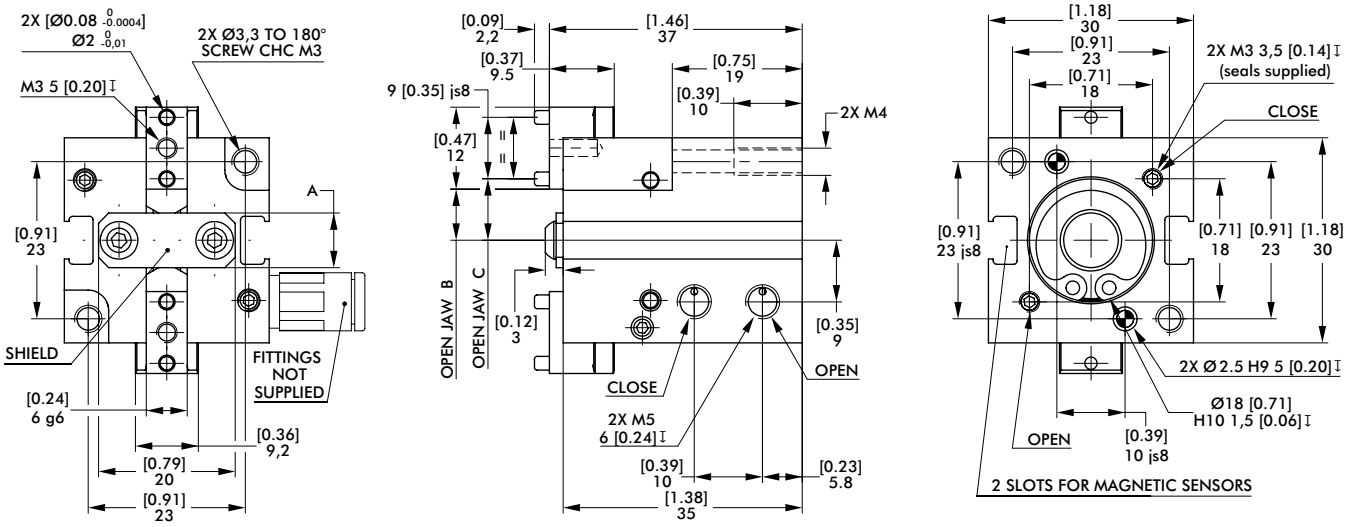

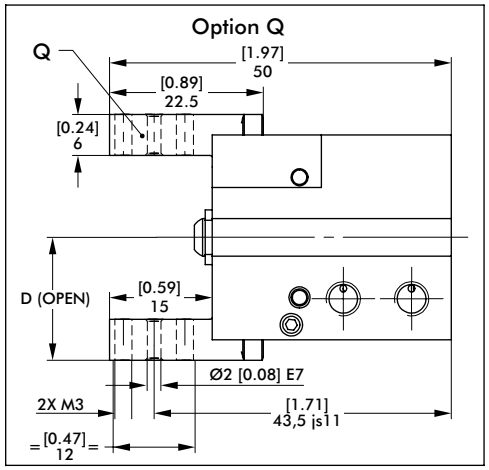

mm [INCH]

THIRD ANGLE PROJECTION

Grippers are supplied with open side air ports and top manifold air ports plugged. Top manifold sealing dimensions shown.

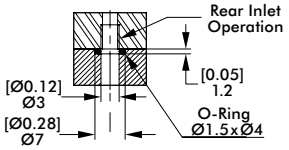

Seal Repair Kits	Buna-N	Viton®
Seal Repair Kit	SCP1	SCP1V
Repair Kit (screws, springs, seals)	KSCP1	KSCP1V

Model	A	B	C	D
CP-1	6 [0.24]	5.3 [0.21]	6,8 [0.27]	15,8 [0.62]
CP-1-C	8 [0.31]	7,5 [0.30]	9 [0.35]	18 [0.71]

Dimensions in mm [in]

Loading Information

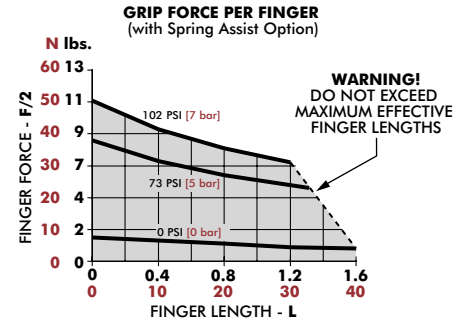

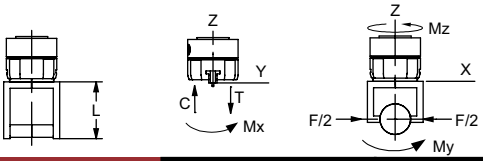

CP-1	Static	Dynamic
Maximum Tensile **T**	110 N [25 lbs]	10 N [2 lbs]
Maximum Compressive **C**	190 N [43 lbs]	10 N [2 lbs]
Maximum Moment M_x	1 Nm [9 in-lbs]	0.2 Nm [2 in-lbs]
Maximum Moment M_y	2 Nm [18 in-lbs]	0.4 Nm [4 in-lbs]
Maximum Moment M_z	2 Nm [18 in-lbs]	0.4 Nm [4 in-lbs]

†Capacities are per set of jaws and are not simultaneous

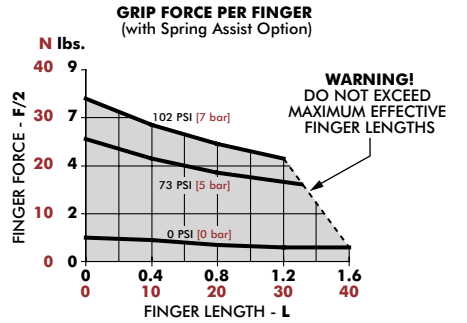

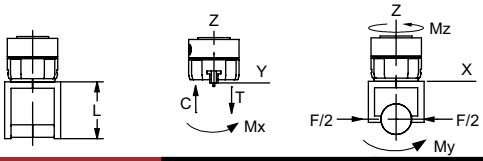

CP-1-C	Static	Dynamic
Maximum Tensile **T**	110 N [25 lbs]	8 N [2 lbs]
Maximum Compressive **C**	190 N [43 lbs]	8 N [2 lbs]
Maximum Moment M_x	1 Nm [9 in-lbs]	0.2 Nm [2 in-lbs]
Maximum Moment M_y	2 Nm [18 in-lbs]	0.3 Nm [3 in-lbs]
Maximum Moment M_z	2 Nm [18 in-lbs]	0.3 Nm [3 in-lbs]

†Capacities are per set of jaws and are not simultaneous

2-Jaw General Industrial Grippers | Dimensions and Technical Specifications

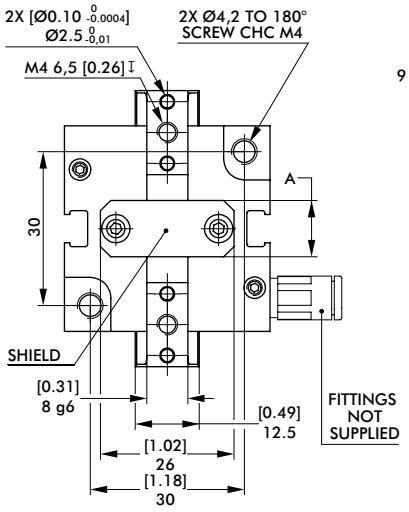

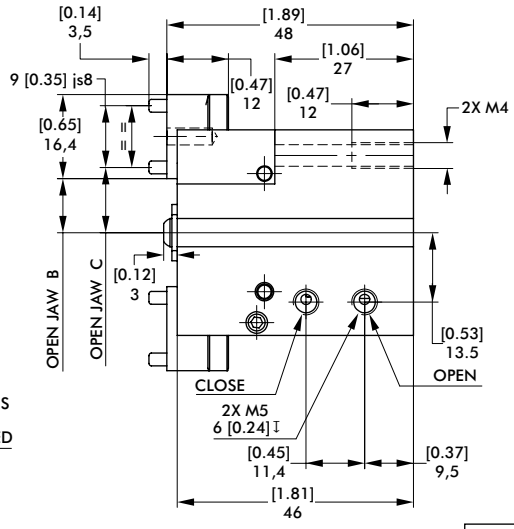

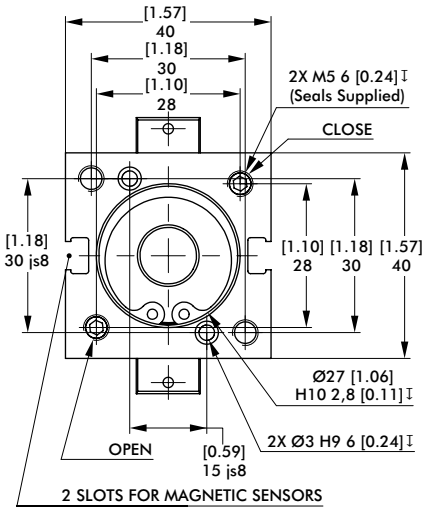

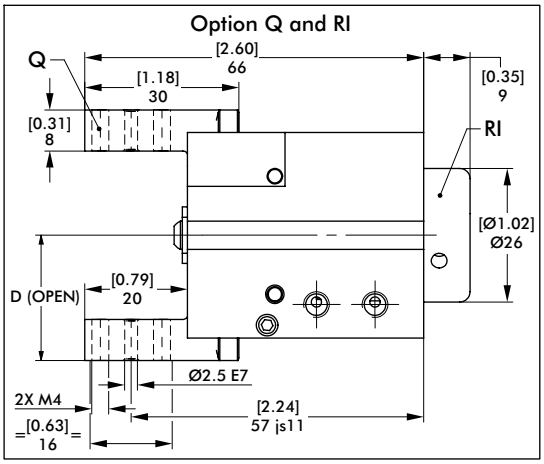

mm [INCH]

THIRD ANGLE PROJECTION

Grippers are supplied with open side air ports and top manifold air ports plugged. Top manifold sealing dimensions shown.

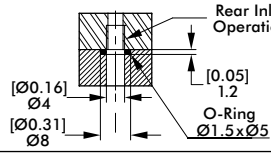

Sensor Accessories	CP-2
Inductive Sensor Mounting Kit (mounts 2 sensors) (**SD**)	SDCP2

Seal Repair Kits	Buna-N	Viton®
Seal Repair Kit	SCP2	SCP2V
Repair Kit (screws, springs, seals)	KSCP2	KSCP2V

Model	A	B	C	D
CP-2	7,5 [0.30]	7,1 [0.28]	9,3 [0.37]	21 [0.83]
CP-2-C	11 [0.43]	10,5 [0.41]	12,7 [0.50]	24,4 [0.96]

Dimensions in mm [in]

Loading Information

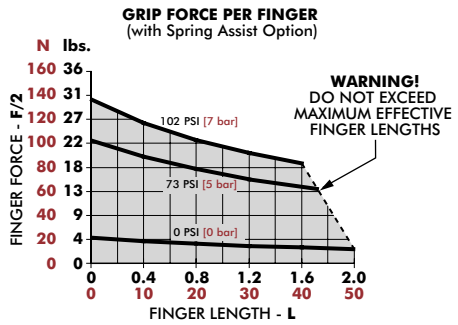

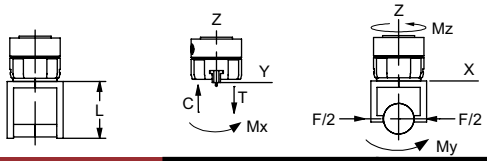

CP-2	Static	Dynamic
Maximum Tensile **T**	260 N [58 lbs]	26 N [6 lbs]
Maximum Compressive **C**	375 N [84 lbs]	26 N [6 lbs]
Maximum Moment M_x	5 Nm [44 in-lbs]	0.9 Nm [8 in-lbs]
Maximum Moment M_y	8 Nm [71 in-lbs]	1.5 Nm [13 in-lbs]
Maximum Moment M_z	8 Nm [71 in-lbs]	1.5 Nm [13 in-lbs]

†Capacities are per set of jaws and are not simultaneous

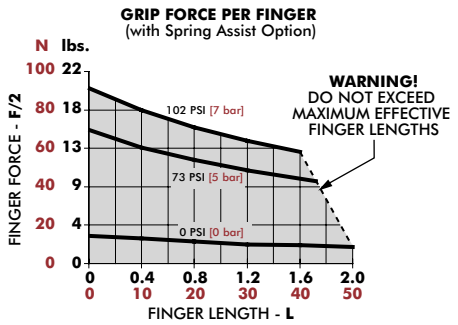

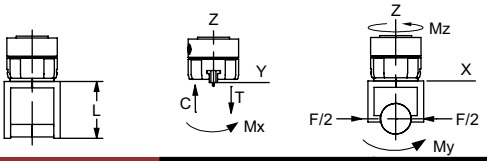

CP-2-C	Static	Dynamic
Maximum Tensile **T**	260 N [58 lbs]	22 N [5 lbs]
Maximum Compressive **C**	375 N [84 lbs]	22 N [5 lbs]
Maximum Moment M_x	4 Nm [35 in-lbs]	0.7 Nm [6 in-lbs]
Maximum Moment M_y	8 Nm [71 in-lbs]	1.2 Nm [11 in-lbs]
Maximum Moment M_z	8 Nm [71 in-lbs]	1.2 Nm [11 in-lbs]

†Capacities are per set of jaws and are not simultaneous

CP-3, CP-3-C

2-Jaw General Industrial Grippers | Dimensions and Technical Specifications

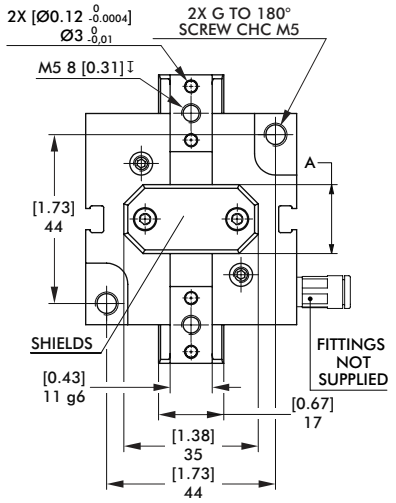

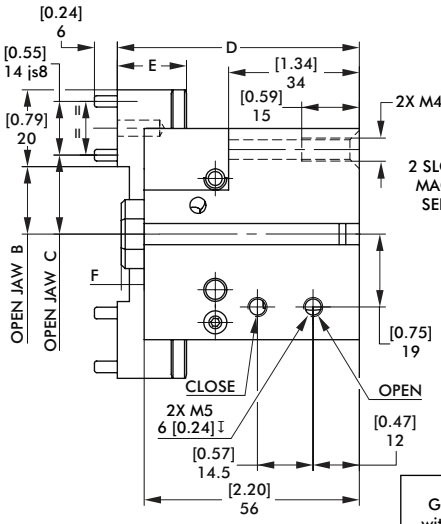

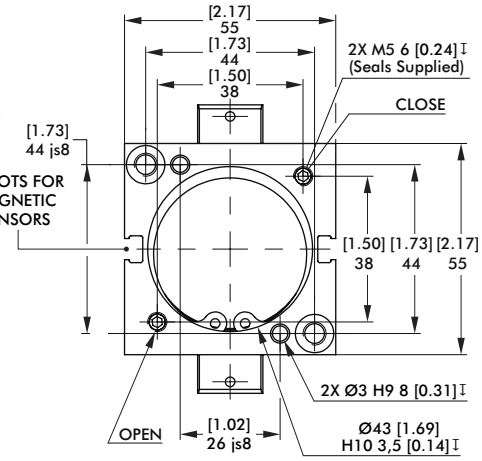

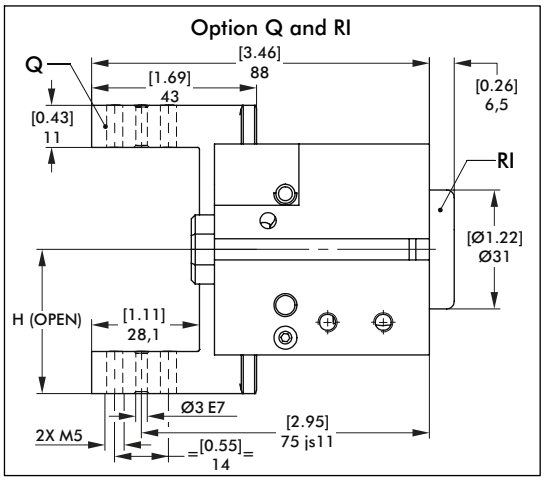

mm [INCH]

THIRD ANGLE PROJECTION

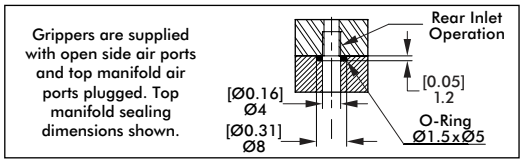

Sensor Accessories	CP-3
Inductive Sensor Mounting Kit (mounts 2 sensors) (**SD**)	SDCP3

Seal Repair Kits	Buna-N	Viton®
Seal Repair Kit	SCP3	SCP3V
Repair Kit (screws, springs, seals)	KSCP3	KSCP3V

Model	A	B	C	D	E
CP-3	12 [0.47]	12 [0.47]	15 [0.59]	58 [2.28]	13 [0.51]
CP-3-C	18 [0.71]	17.6 [0.69]	20.6 [0.81]	63 [2.48]	18 [0.71]

Model	F	G	H	J
CP-3	3 [0.12]	3.3 [0.13]	84 [3.31]	32 [1.26]
CP-3-C	6 [0.24]	5.1 [0.20]	88 [3.46]	37.6 [1.48]

Dimensions in mm [in]

Loading Information

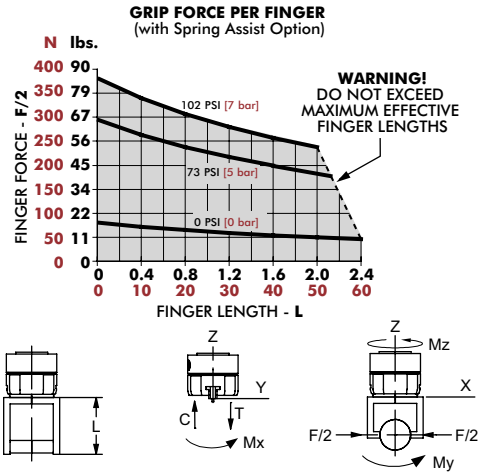

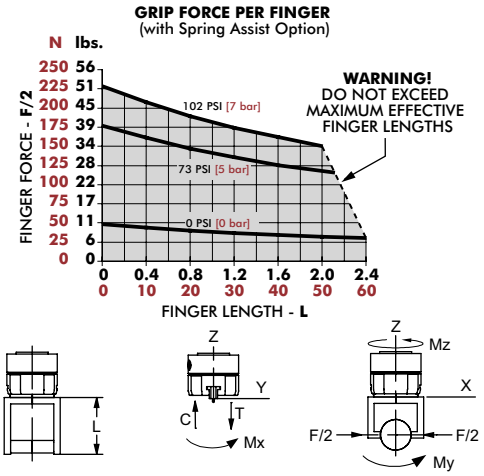

CP-3	Static	Dynamic
Maximum Tensile **T**	520 N [117 lbs]	72 N [16 lbs]
Maximum Compressive **C**	690 N [155 lbs]	72 N [16 lbs]
Maximum Moment $\mathbf{M_X}$	11 Nm [97 in-lbs]	3.5 Nm [31 in-lbs]
Maximum Moment $\mathbf{M_Y}$	18 Nm [159 in-lbs]	6 Nm [53 in-lbs]
Maximum Moment $\mathbf{M_Z}$	17 Nm [150 in-lbs]	6 Nm [53 in-lbs]

†Capacities are per set of jaws and are not simultaneous

CP-3-C	Static	Dynamic
Maximum Tensile **T**	500 N [112 lbs]	55 N [12 lbs]
Maximum Compressive **C**	675 N [152 lbs]	55 N [12 lbs]
Maximum Moment $\mathbf{M_X}$	9 Nm [80 in-lbs]	2.5 Nm [22 in-lbs]
Maximum Moment $\mathbf{M_Y}$	16 Nm [142 in-lbs]	4 Nm [35 in-lbs]
Maximum Moment $\mathbf{M_Z}$	17 Nm [150 in-lbs]	4 Nm [35 in-lbs]

†Capacities are per set of jaws and are not simultaneous

2-Jaw General Industrial Grippers | Dimensions and Technical Specifications

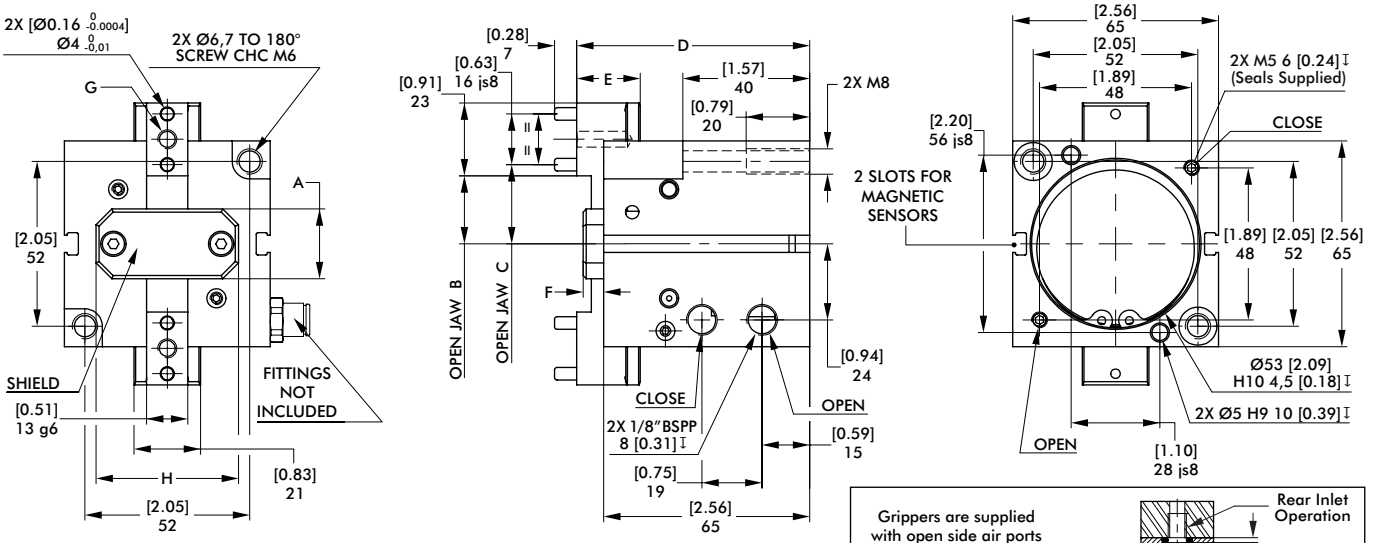

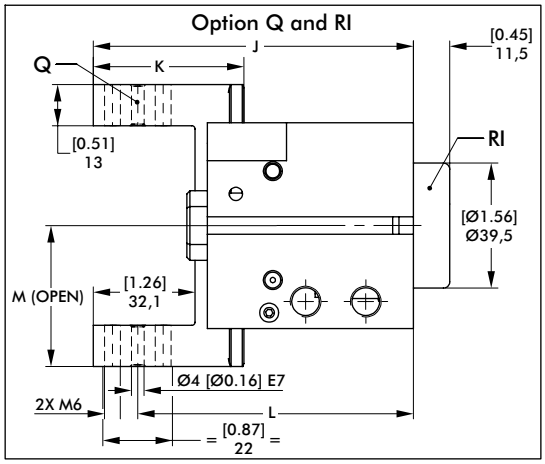

mm [INCH]

THIRD ANGLE PROJECTION

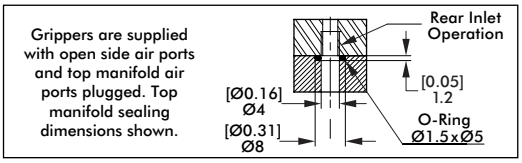

Sensor Accessories	CP-4
Inductive Sensor Mounting Kit (mounts 2 sensors) (**SD**)	SDCP4

Seal Repair Kits	Buna-N	Viton®
Seal Repair Kit	SCP4	SCP4V
Repair Kit (screws, springs, seals)	KSCP4	KSCP4V

Model	A	B	C	D	E	F
CP-4	16 [0.63]	16 [0.63]	19.5 [0.77]	73 [2.87]	19.5 [0.77]	3 [0.12]
CP-4-C	22 [0.87]	21.5 [0.85]	25 [0.98]	73.5 [2.89]	20 [0.79]	6.5 [0.26]

Model	G	H	J	K	L	M
CP-4	M5 8 [0.31]	46 [1.81]	97 [3.82]	43.5 [1.71]	83 [3.27]	39 [1.54]
CP-4-C	M6 12 [0.47]	45 [1.77]	101 [3.98]	47.5 [1.87]	87 [3.43]	44.5 [1.75]

Dimensions in mm [in]

Loading Information

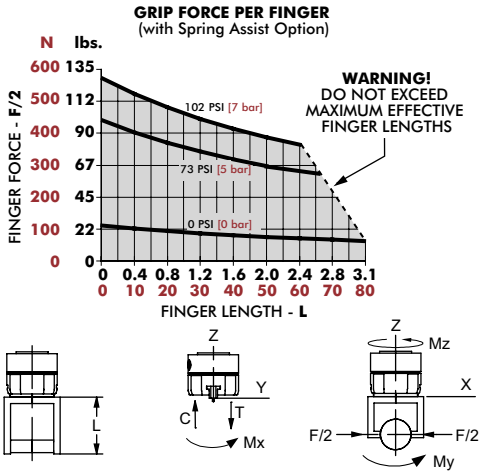

CP-4	Static	Dynamic
Maximum Tensile **T**	740 N [166 lbs]	109 N [24 lbs]
Maximum Compressive **C**	830 N [187 lbs]	109 N [24 lbs]
Maximum Moment M_X	23 Nm [204 in-lbs]	6.5 Nm [58 in-lbs]
Maximum Moment M_Y	35 Nm [310 in-lbs]	10 Nm [89 in-lbs]
Maximum Moment M_Z	25 Nm [221 in-lbs]	8 Nm [71 in-lbs]

†Capacities are per set of jaws and are not simultaneous

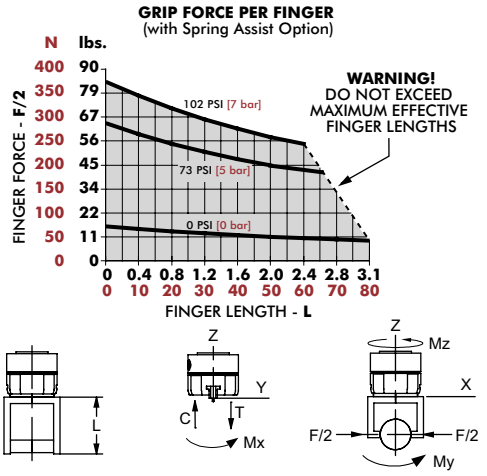

CP-4-C	Static	Dynamic
Maximum Tensile **T**	710 N [160 lbs]	89 N [20 lbs]
Maximum Compressive **C**	800 N [180 lbs]	89 N [20 lbs]
Maximum Moment M_X	18 Nm [159 in-lbs]	4.7 Nm [42 in-lbs]
Maximum Moment M_Y	30 Nm [266 in-lbs]	7.6 Nm [67 in-lbs]
Maximum Moment M_Z	25 Nm [221 in-lbs]	7.6 Nm [67 in-lbs]

†Capacities are per set of jaws and are not simultaneous

CP-5, CP-5-C

2-Jaw General Industrial Grippers | Dimensions and Technical Specifications

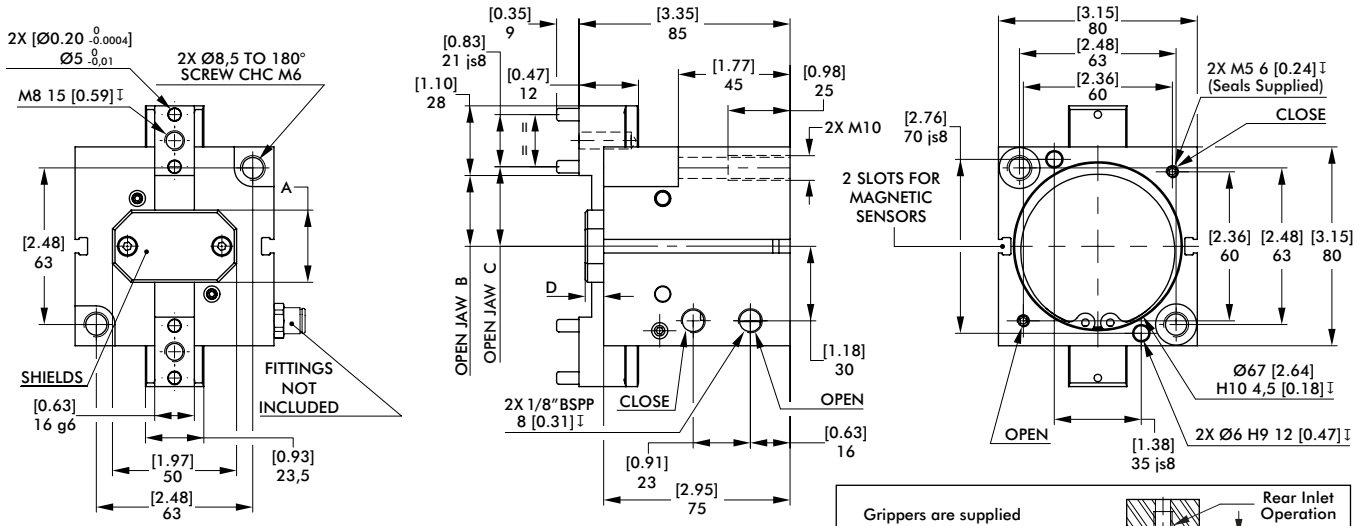

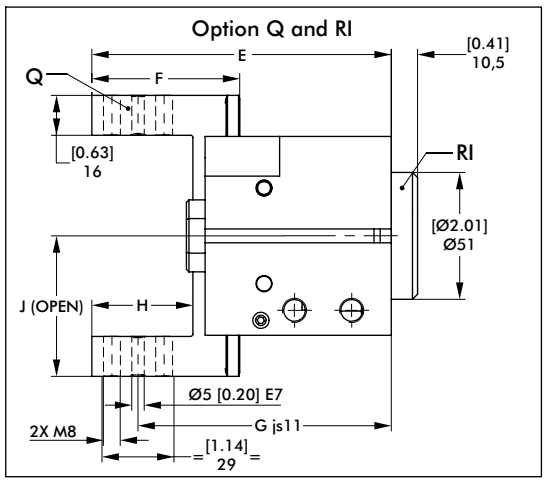

mm [INCH]

THIRD ANGLE PROJECTION

Grippers are supplied with open side air ports and top manifold air ports plugged. Top manifold sealing dimensions shown.

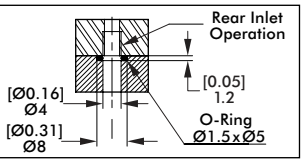

Sensor Accessories	CP-5
Inductive Sensor Mounting Kit (mounts 2 sensors) (**SD**)	SDCP5

Seal Repair Kits	Buna-N	Viton®
Seal Repair Kit	SCP5	SCP5V
Repair Kit (screws, springs, seals)	KSCP5	KSCP5V

Model	A	B	C	D	E
CP-5	20 [0.79]	19.5 [0.77]	23 [0.91]	3 [0.12]	115.5 [4.55]
CP-5-C	29 [1.14]	28,5 [1.12]	32 [1.26]	7,5 [0.30]	120,5 [4.74]

Model	F	G	H	J
CP-5	54.5 [2.15]	97 [3.82]	40.5 [1.59]	47.5 [1.87]
CP-5-C	59,5 [2.34]	102 [4.02]	40,6 [1.60]	56,5 [2.22]

Dimensions in mm [in]

Loading Information

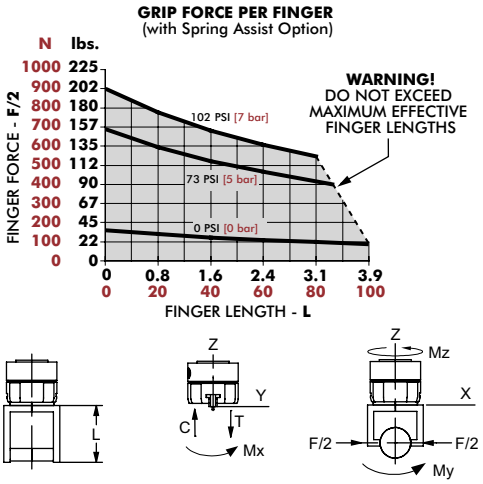

CP-5	Static	Dynamic
Maximum Tensile **T**	830 N [187 lbs]	169 N [38 lbs]
Maximum Compressive **C**	940 N [211 lbs]	169 N [38 lbs]
Maximum Moment M_x	27 Nm [6 in-lbs]	9 Nm [80 in-lbs]
Maximum Moment M_y	44 Nm [10 in-lbs]	14 Nm [124 in-lbs]
Maximum Moment M_z	30 Nm [7 in-lbs]	10 Nm [89 in-lbs]

†Capacities are per set of jaws and are not simultaneous

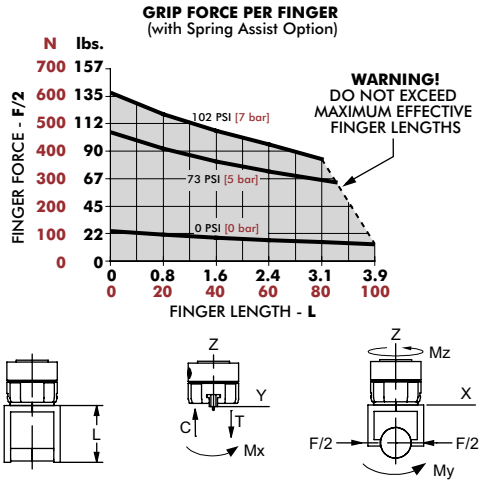

CP-5-C	Static	Dynamic
Maximum Tensile **T**	820 N [184 lbs]	144 N [32 lbs]
Maximum Compressive **C**	930 N [209 lbs]	144 N [32 lbs]
Maximum Moment M_x	22 Nm [195 in-lbs]	7 Nm [62 in-lbs]
Maximum Moment M_y	40 Nm [354 in-lbs]	13 Nm [115 in-lbs]
Maximum Moment M_z	30 Nm [266 in-lbs]	10 Nm [89 in-lbs]

†Capacities are per set of jaws and are not simultaneous

Dimensions and technical information are subject to change without notice

2-Jaw General Industrial Grippers | Dimensions and Technical Specifications

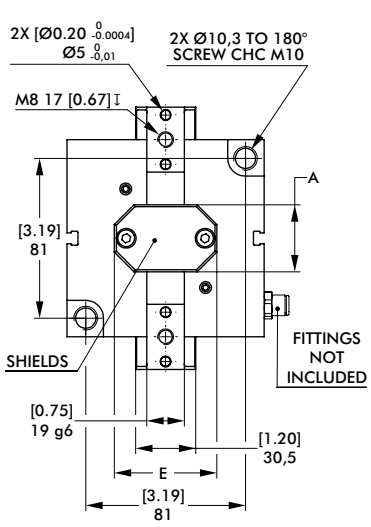

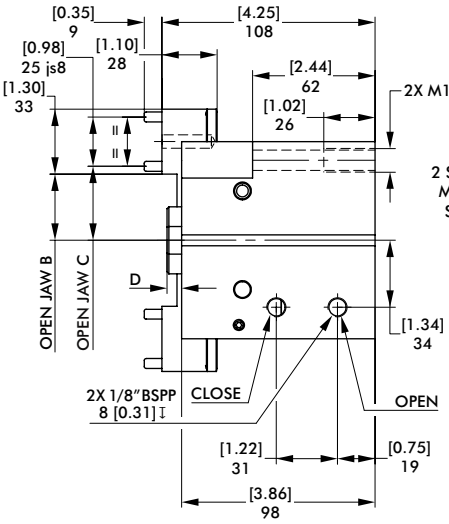

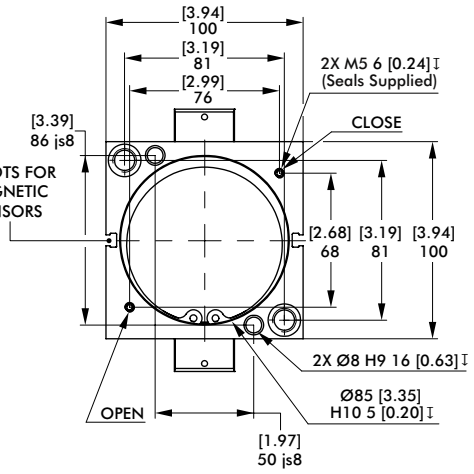

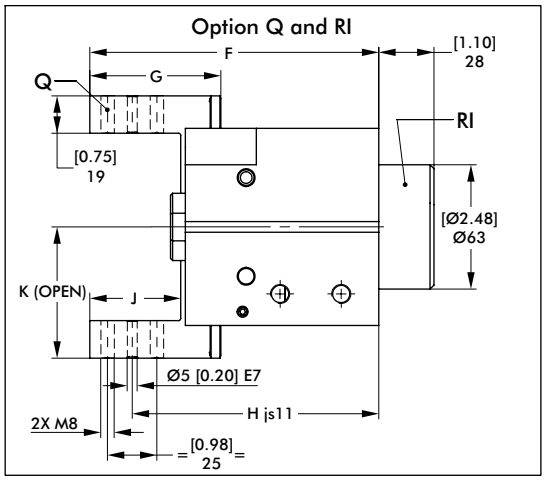

mm [INCH]

THIRD ANGLE PROJECTION

Grippers are supplied with open side air ports and top manifold air ports plugged. Top manifold sealing dimensions shown.

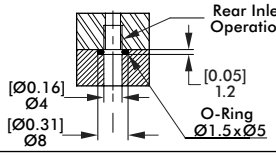

Sensor Accessories	CP-6
Inductive Sensor Mounting Kit (mounts 2 sensors) (**SD**)	SDCP6

Seal Repair Kits	Buna-N	Viton®
Seal Repair Kit	SCP6	SCP6V
Repair Kit (screws, springs, seals)	KSCP6	KSCP6V

Model	A	B	C	D	E
CP-6	26 [1.02]	25,5 [1.00]	29,5 [1.16]	3 [0.12]	50 [1.97]
CP-6-C	34 [1.34]	33,5 [1.32]	37,5 [1.48]	7,5 [0.30]	52 [2.05]

Model	F	G	H	J	K
CP-6	144 [5.67]	64 [2.52]	122,5 [4.82]	46 [1.81]	58,5 [2.30]
CP-6-C	146,5 [5.77]	66,5 [2.62]	125 [4.92]	46,1 [1.81]	66,5 [2.62]

Dimensions in mm [in]

Loading Information

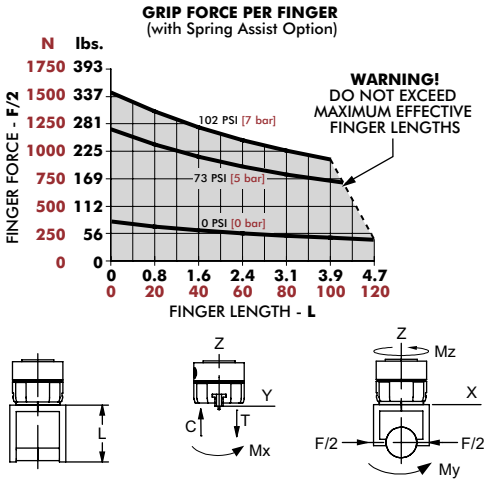

CP-6	Static	Dynamic
Maximum Tensile **T**	1375 N [309 lbs]	209 N [47 lbs]
Maximum Compressive **C**	1500 N [337 lbs]	209 N [47 lbs]
Maximum Moment M_x	48 Nm [11 in-lbs]	16 Nm [142 in-lbs]
Maximum Moment M_y	72 Nm [16 in-lbs]	24 Nm [212 in-lbs]
Maximum Moment M_z	68 Nm [15 in-lbs]	22 Nm [195 in-lbs]

†Capacities are per set of jaws and are not simultaneous

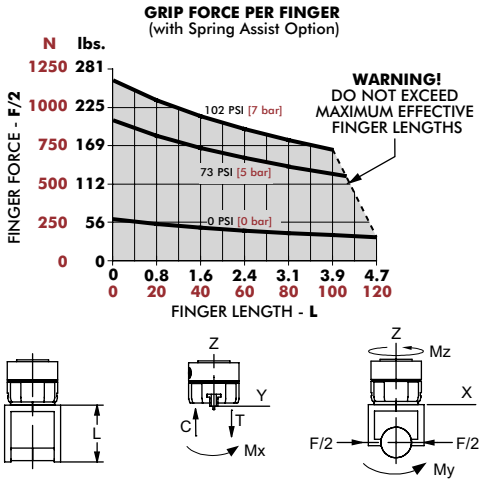

CP-6-C	Static	Dynamic
Maximum Tensile **T**	1340 N [301 lbs]	279 N [63 lbs]
Maximum Compressive **C**	1450 N [326 lbs]	279 N [63 lbs]
Maximum Moment M_x	42 Nm [372 in-lbs]	14 Nm [124 in-lbs]
Maximum Moment M_y	70 Nm [620 in-lbs]	23 Nm [204 in-lbs]
Maximum Moment M_z	64 Nm [566 in-lbs]	21 Nm [186 in-lbs]

†Capacities are per set of jaws and are not simultaneous

DPDL SERIES

2-Jaw General Industrial Grippers | Features and Benefits | How To Order

Features:

- Rugged general purpose modular gripper
- High impact resistance with double wedge design
- Harsh environments with sealed rubber boot jaw option
- Thru-body mounting and multiple mounting features simplifies installation
- Multiple air ports support manifold interface using O-rings
- Purge and scavenge ports for harsh & clean environments

Applications:

- Use in machine coolant and metal chip environment applications
- High impact applications
- Paintbooths, sandblasting applications

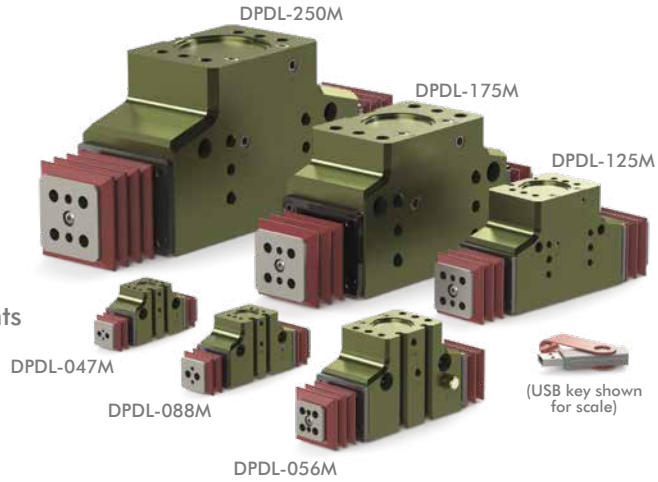

How To Order

Base Model
DPDL

Size
047M **125M**
056M **175M**
088M **250M**

Jaw Mounting Description
"Blank" End Jaw Mounting
B Bottom Jaw Mounting

Jaw Seal Description
E Buna-N Rubber Bellows

Hardware Description
"Blank" Alloy
CR Corrosion Resistant with Clean Room Grade Grease

Seals Description
"Blank" Buna-N
V Viton® High Temperature

Stroke Stroke varies with size of gripper

047M	**019, 025 or 038**	125M	**050, 075 or 100**
056M	**025, 038 or 050**	175M	**075, 100 or 150**
088M	**038, 050 or 075**	250M	**100, 150 or 200**

Stroke dimensions

019	4.8mm [0.19]	**050**	12.7mm [0.50]	**150**	38.1mm [1.50]
025	6.4mm [0.25]	**075**	19.1mm [0.75]	**200**	50.8mm [2.00]
038	9.5mm [0.38]	**100**	25.4mm [1.00]		

Accessories

Sensor Accessories	Model Numbers	Part Number	Qty/Unit
PNP Magneto Resistive Sensor with Quick Disconnect*	047M, 056M, 088M, 125M	OHSP-017	1-2
NPN Magneto Resistive Sensor with Quick Disconnect*	047M, 056M, 088M, 125M	OHSN-017	1-2
PNP Magneto Resistive Sensor with Quick Disconnect*	175M, 250M	OHSP-015	1-2
NPN Magneto Resistive Sensor with Quick Disconnect*	175M, 250M	OHSN-015	1-2
PNP Magneto Resistive Sensor (90° barrel) w/Qk. Disc.*	047M, 056M, 088M, 125M	OHSP-011	1-2
NPN Magneto Resistive Sensor (90° barrel) w/Qk. Disc.*	047M, 056M, 088M, 125M	OHSN-011	1-2
Quick Disconnect 2 Meter Cable Length*	All Models	CABL-010	1-2
Quick Disconnect 5 Meter Cable Length*	All Models	CABL-013	1-2

Pneumatic Accessories	Model Numbers	Part Number	Qty/Unit
Plumbing Fitting - M3 male to 3mm OD Tube Push-in Style	047M, 056M	PLFT-021	1-2
Plumbing Fitting - M3 male to 2mm ID Tube Barb Style	047M, 056M	PLFT-022	1-2
Plumbing Fitting - 1/8 NPT Male to 1/8 BSPP Female	125M, 250M	PLFT-028	1-2
Adjustable Flow Control G 1/8 Elbow - 6mm OD Push-in	125M, 250M	VLVF-005	1-2
Adjustable Flow Control M5 Elbow - 6mm OD Push-in	088M, 125M	VLVF-008	1-2
Fail Safe Valve M5	088M, 125M	OFSV-004	1
Fail Safe Valve G 1/8 (1/8 BSPP)	175M, 250M	OFSV-005	1

*Sensor and cable sold separately.

Specifications	Units	047M	056M	088M
Total Rated Grip Force **F** @ 100 psi	N [lbs]	62 [14]	98 [22]	222 [50]
Total Stroke	mm [in]	9.5 [0.38]	12.7 [0.50]	19.1 [0.75]
Weight	kg [lbs]	0.08 [0.19]	0.14 [0.32]	0.43 [0.95]
Pressure Range	bar [psi]	1.5-7 [20-100]		
Max. Vacuum for Scavenge Port	mm Hg [in. Hg]	200 [8]		
Max. Pressure for Purge Port	bar [psi]	1.4 [20]		
with **-E** Jaw Boot	bar [psi]	0.25 [4]		
Ingress Protection Class (IP)		IP66		
Displacement	cm^3 [in^3]	0.6 [0.038]	1.2 [0.074]	4.4 [0.269]
Temperature Range (Buna-N seals)	°C [°F]	-35°~80° [-30°~180°]		
Temperature Range (Viton® seals)	°C [°F]	-30°~150° [-20°~300°]		
Actuation	sec	0.20	0.25	0.30
Accuracy	mm [in]	±0.05 [±0.002]		
Repeatability	mm [in]	±0.03 [±0.001]		
Valve to Actuate Double Acting		4-way, 2-position		

Specifications	Units	125M	175M	250M
Total Rated Grip Force **F** @ 100 psi	N [lbs]	445 [100]	890 [200]	1779 [400]
Total Stroke	mm [in]	25.4 [1.00]	38.1 [1.50]	50.8 [2.00]
Weight	kg [lbs]	0.90 [1.99]	2.73 [6.02]	5.46 [12.04]
Pressure Range	bar [psi]	1.5-7 [20-100]		
Max. Vacuum for Scavenge Port	mm Hg [in. Hg]	200 [8]		
Max. Pressure for Purge Port	bar [psi]	1.4 [20]		
with **-E** Jaw Boot	bar [psi]	0.25 [4]		
Ingress Protection Class (IP)		IP66		
Displacement	cm^3 [in^3]	12.0 [0.730]	35.2 [2.150]	95.9 [5.850]
Temperature Range (Buna-N seals)	°C [°F]	-35°~80° [-30°~180°]		
Temperature Range (Viton® seals)	°C [°F]	-30°~150° [-20°~300°]		
Actuation	sec	0.50	0.70	0.90
Accuracy	mm [in]	±0.08 [±0.003]		
Repeatability	mm [in]	±0.03 [±0.001]		
Valve to Actuate Double Acting		4-way, 2-position		

DPDL-047M, 047M-B

2-Jaw General Industrial Grippers | Dimensions and Technical Specifications

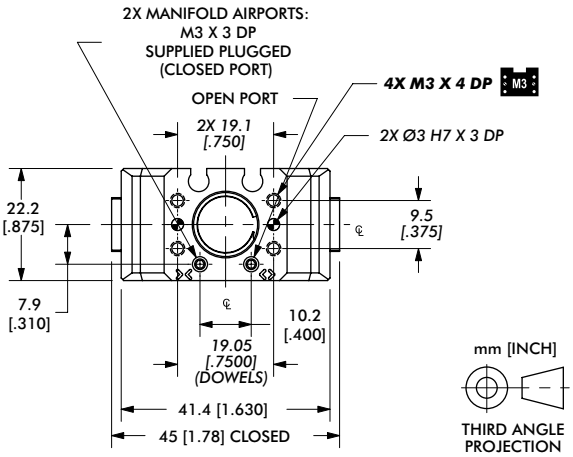

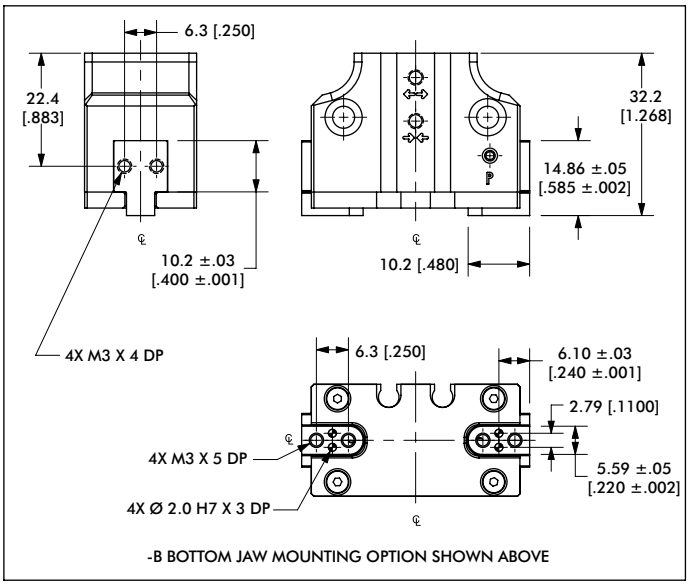

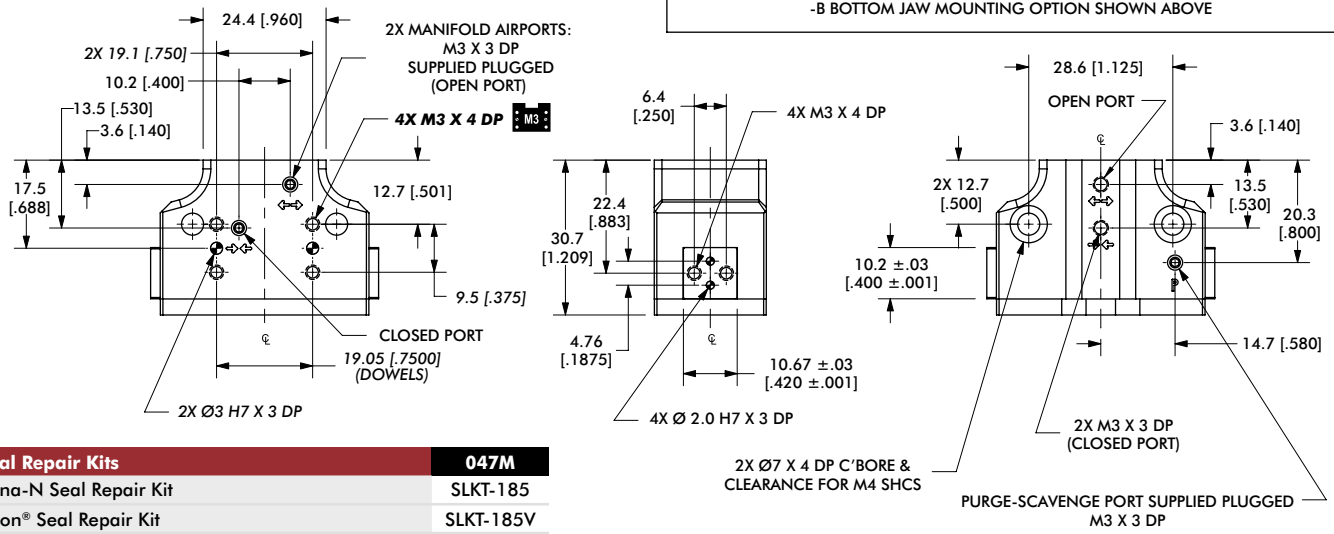

Seal Repair Kits	047M
Buna-N Seal Repair Kit	SLKT-185
Viton® Seal Repair Kit	SLKT-185V
Manifold Seal Kit (Viton® only)	SLKT-197V
Sealed Jaw Boot Replacement (1 Buna-N Boot only)	SLKT-191

Loading Information

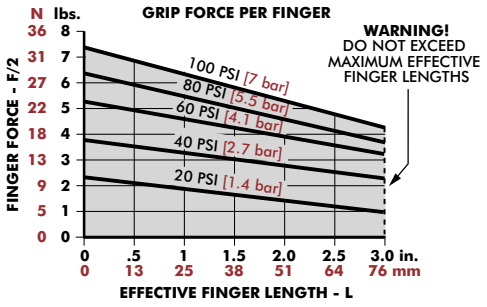

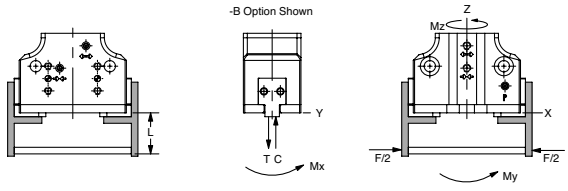

DPDL-047M	Static	Dynamic
Maximum Tensile **T**	445 N [100 lbs]	67 N [15 lbs]
Maximum Compressive **C**	668 N [150 lbs]	111 N [25 lbs]
Maximum Moment M_x	10 Nm [90 in-lbs]	2 Nm [15 in-lbs]
Maximum Moment **My**	10 Nm [90 in-lbs]	2 Nm [15 in-lbs]
Maximum Moment M_z	10 Nm [90 in-lbs]	2 Nm [15 in-lbs]

†Capacities are per set of jaws and are not simultaneous

DPDL-047M-B	Static	Dynamic
Maximum Tensile **T**	356 N [80 lbs]	53 N [12 lbs]
Maximum Compressive **C**	534 N [120 lbs]	89 N [20 lbs]
Maximum Moment M_x	8 Nm [72 in-lbs]	1 Nm [12 in-lbs]
Maximum Moment **My**	8 Nm [72 in-lbs]	1 Nm [12 in-lbs]
Maximum Moment M_z	8 Nm [72 in-lbs]	1 Nm [12 in-lbs]

†Capacities are per set of jaws and are not simultaneous

Dimensions and technical information are subject to change without notice

DPDL-056M, 056M-B

2-Jaw General Industrial Grippers | Dimensions and Technical Specifications

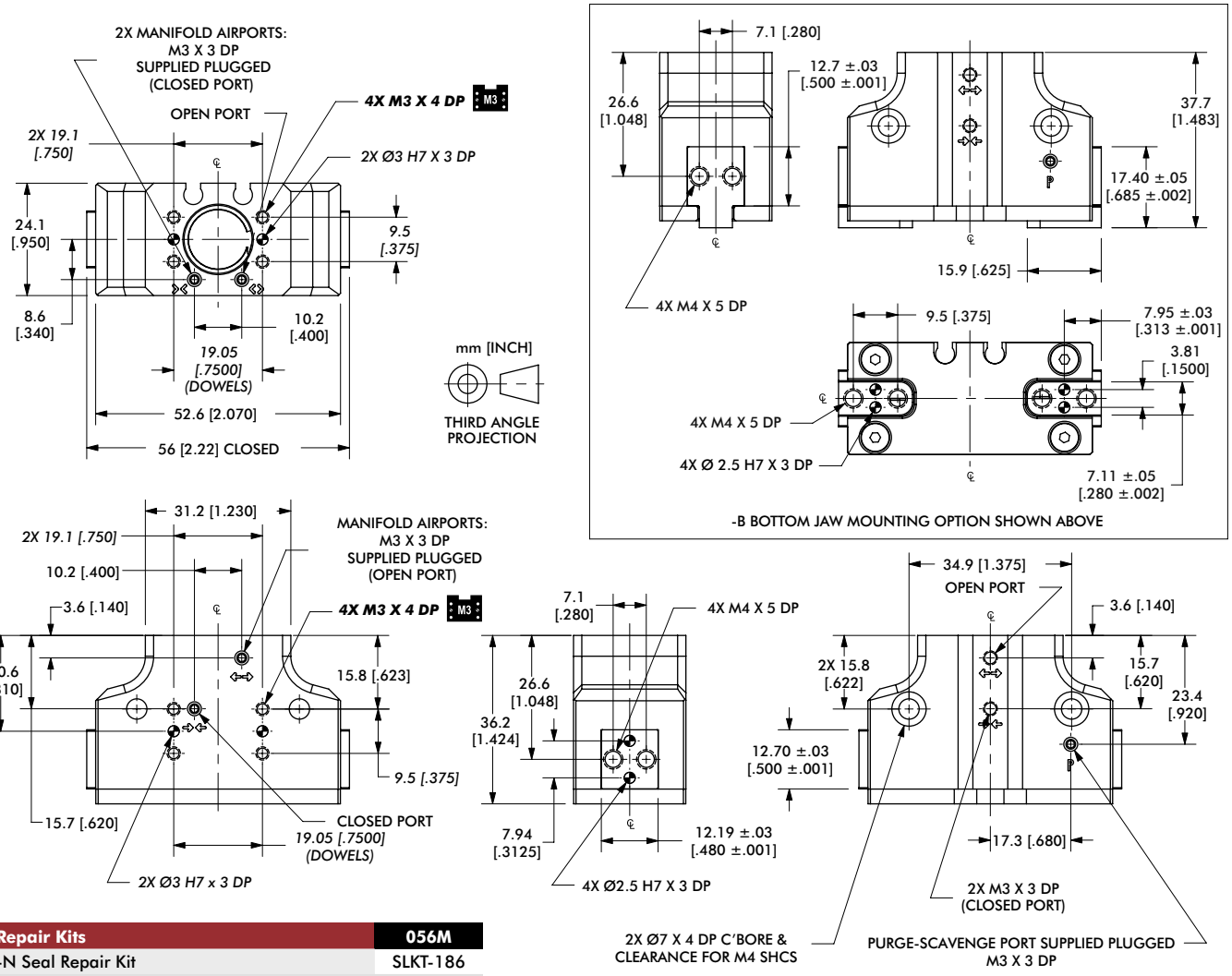

Seal Repair Kits	056M
Buna-N Seal Repair Kit	SLKT-186
Viton® Seal Repair Kit	SLKT-186V
Manifold Seal Kit (Viton® only)	SLKT-197V
Sealed Jaw Boot Replacement (1 Buna-N Boot only)	SLKT-192

Loading Information

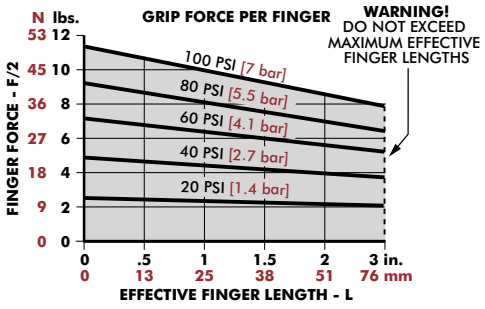

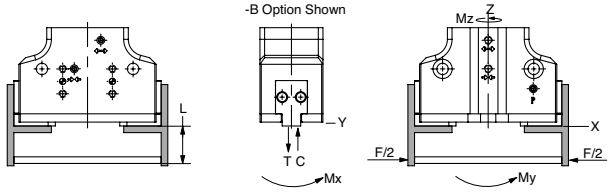

DPDL-056M	Static	Dynamic
Maximum Tensile **T**	556 N [125 lbs]	111 N [25 lbs]
Maximum Compressive **C**	1113 N [250 lbs]	111 N [25 lbs]
Maximum Moment M_X	13 Nm [115 in-lbs]	2 Nm [20 in-lbs]
Maximum Moment **My**	13 Nm [115 in-lbs]	2 Nm [20 in-lbs]
Maximum Moment M_Z	13 Nm [115 in-lbs]	2 Nm [20 in-lbs]

†Capacities are per set of jaws and are not simultaneous

DPDL-056M-B	Static	Dynamic
Maximum Tensile **T**	445 N [100 lbs]	89 N [20 lbs]
Maximum Compressive **C**	890 N [200 lbs]	89 N [20 lbs]
Maximum Moment M_X	10 Nm [92 in-lbs]	2 Nm [16 in-lbs]
Maximum Moment **My**	10 Nm [92 in-lbs]	2 Nm [16 in-lbs]
Maximum Moment M_Z	10 Nm [92 in-lbs]	2 Nm [16 in-lbs]

†Capacities are per set of jaws and are not simultaneous

DPDL-088M, 088M-B

2-Jaw General Industrial Grippers | Dimensions and Technical Specifications

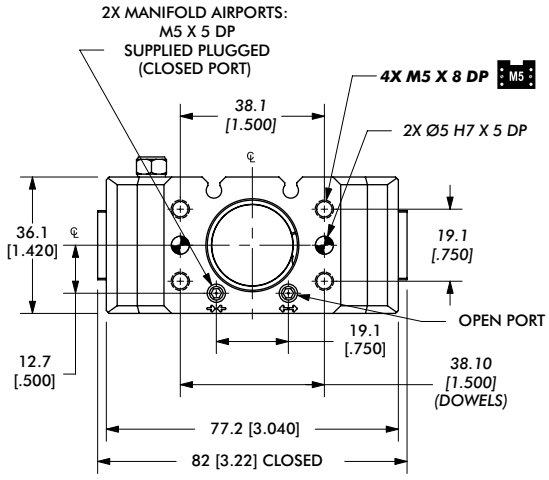

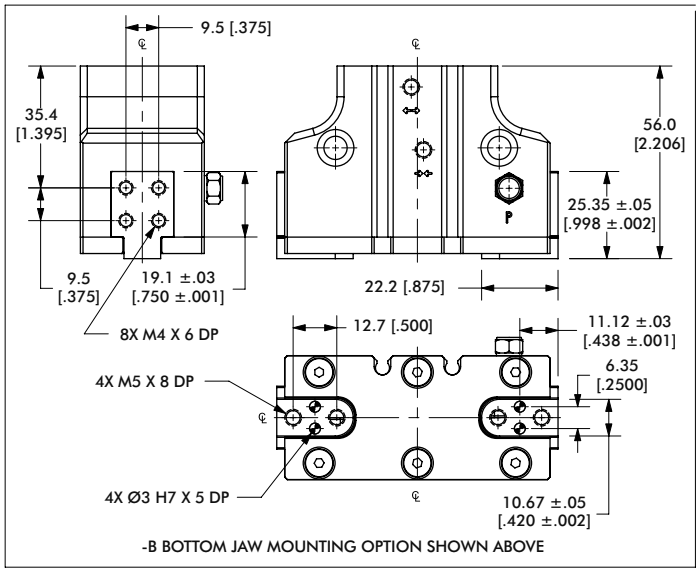

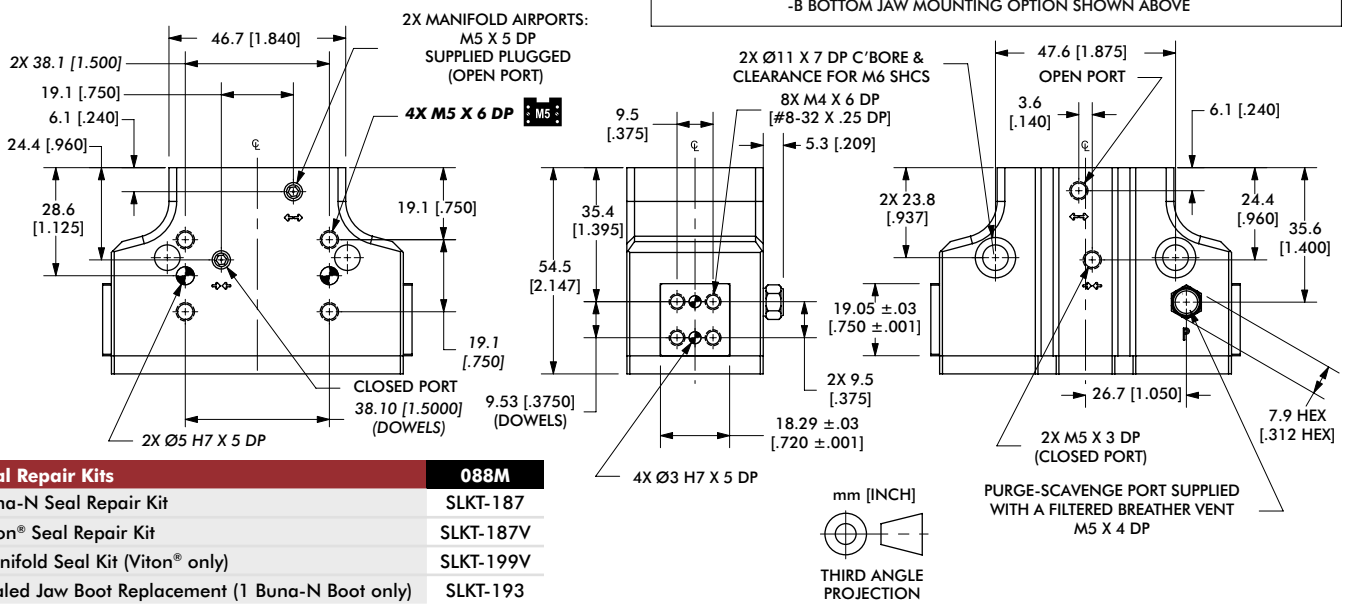

Seal Repair Kits	088M
Buna-N Seal Repair Kit	SLKT-187
Viton® Seal Repair Kit	SLKT-187V
Manifold Seal Kit (Viton® only)	SLKT-199V
Sealed Jaw Boot Replacement (1 Buna-N Boot only)	SLKT-193

Loading Information

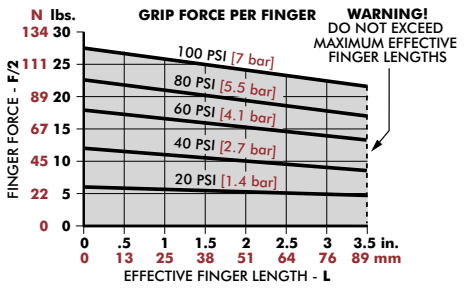

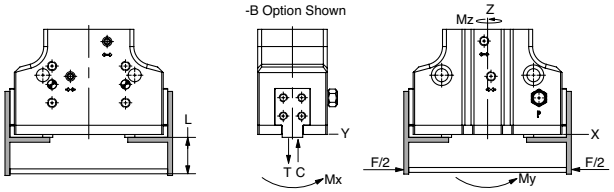

DPDL-088M	Static	Dynamic
Maximum Tensile **T**	1558 N [350 lbs]	178 N [40 lbs]
Maximum Compressive **C**	2893 N [650 lbs]	178 N [40 lbs]
Maximum Moment M_X	28 Nm [250 in-lbs]	5 Nm [40 in-lbs]
Maximum Moment **My**	28 Nm [250 in-lbs]	5 Nm [40 in-lbs]
Maximum Moment M_Z	28 Nm [250 in-lbs]	5 Nm [40 in-lbs]

†Capacities are per set of jaws and are not simultaneous

DPDL-088M-B	Static	Dynamic
Maximum Tensile **T**	1246 N [280 lbs]	142 N [32 lbs]
Maximum Compressive **C**	2314 N [520 lbs]	142 N [32 lbs]
Maximum Moment M_X	23 Nm [200 in-lbs]	4 Nm [32 in-lbs]
Maximum Moment **My**	23 Nm [200 in-lbs]	4 Nm [32 in-lbs]
Maximum Moment M_Z	23 Nm [200 in-lbs]	4 Nm [32 in-lbs]

†Capacities are per set of jaws and are not simultaneous

DPDL-125M, 125M-B

2-Jaw General Industrial Grippers | Dimensions and Technical Specifications

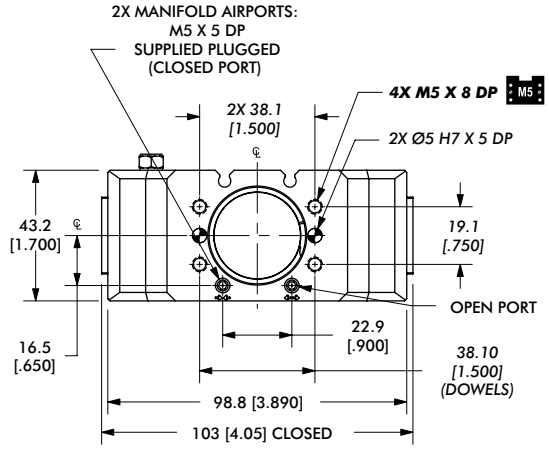

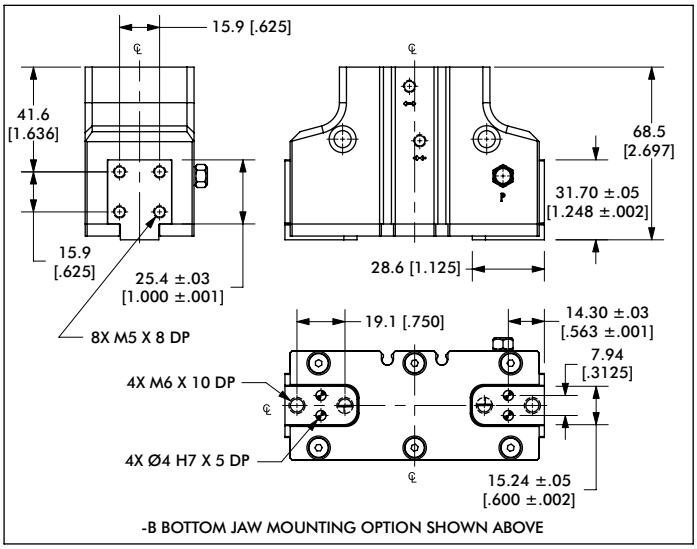

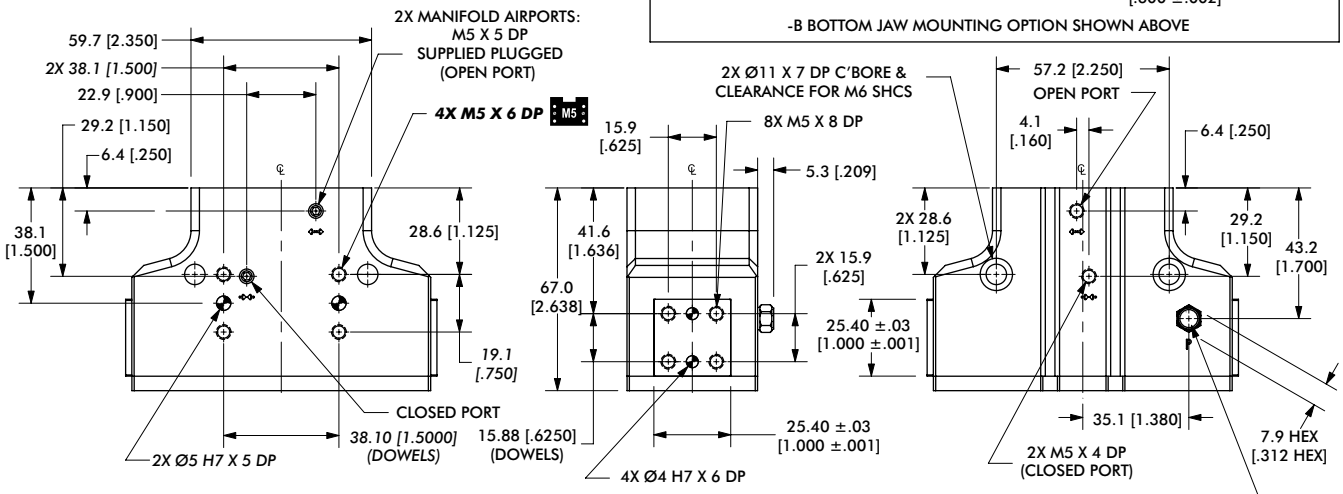

Seal Repair Kits	125M
Buna-N Seal Repair Kit	SLKT-188
Viton® Seal Repair Kit	SLKT-188V
Manifold Seal Kit (Viton® only)	SLKT-199V
Sealed Jaw Boot Replacement (1 Buna-N Boot only)	SLKT-194

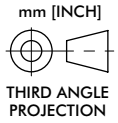

Loading Information

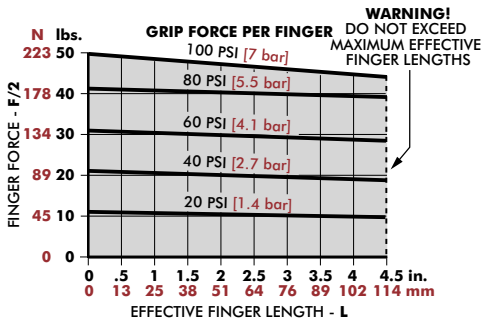

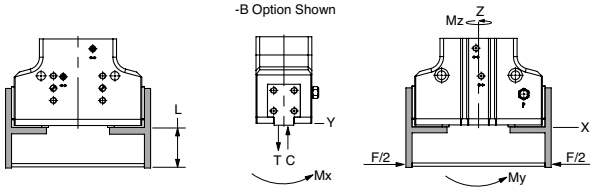

DPDL-125M	Static	Dynamic
Maximum Tensile **T**	3004 N [675 lbs]	401 N [90 lbs]
Maximum Compressive **C**	5785 N [1300 lbs]	401 N [90 lbs]
Maximum Moment M_X	73 Nm [650 in-lbs]	12 Nm [110 in-lbs]
Maximum Moment **My**	73 Nm [650 in-lbs]	12 Nm [110 in-lbs]
Maximum Moment M_Z	73 Nm [650 in-lbs]	12 Nm [110 in-lbs]

†Capacities are per set of jaws and are not simultaneous

DPDL-125M-B	Static	Dynamic
Maximum Tensile **T**	2403 N [540 lbs]	320 N [72 lbs]
Maximum Compressive **C**	4628 N [1040 lbs]	320 N [72 lbs]
Maximum Moment M_X	59 Nm [520 in-lbs]	10 Nm [88 in-lbs]
Maximum Moment **My**	59 Nm [520 in-lbs]	10 Nm [88 in-lbs]
Maximum Moment M_Z	59 Nm [520 in-lbs]	10 Nm [88 in-lbs]

†Capacities are per set of jaws and are not simultaneous

DPDL-175M, 175M-B

2-Jaw General Industrial Grippers | Dimensions and Technical Specifications

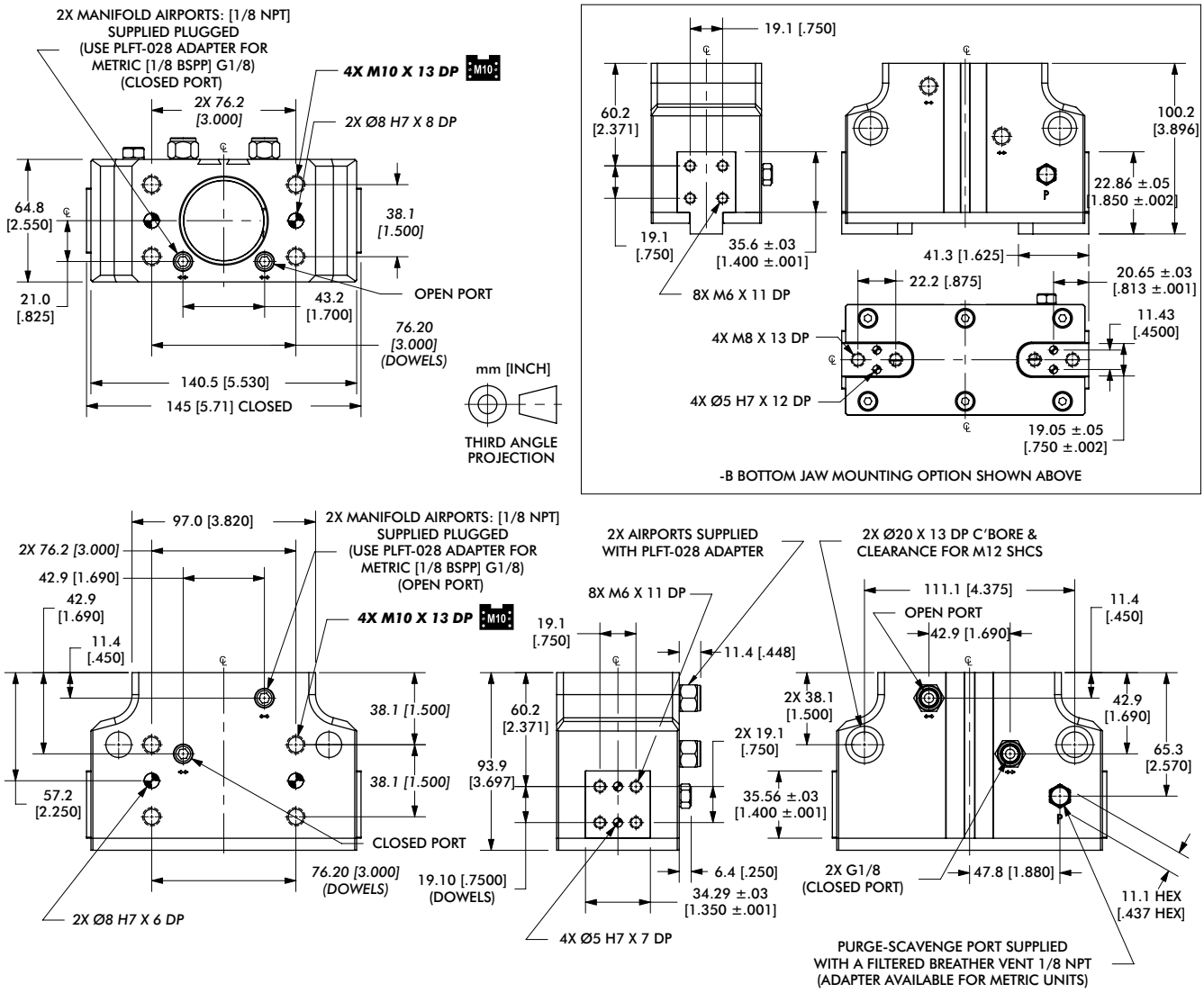

Loading Information

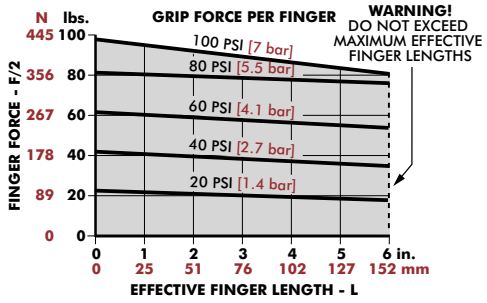

Seal Repair Kits	175M
Buna-N Seal Repair Kit	SLKT-189
Viton® Seal Repair Kit	SLKT-189V
Manifold Seal Kit (Viton® only)	SLKT-201V
Sealed Jaw Boot Replacement (1 Buna-N Boot only)	SLKT-195

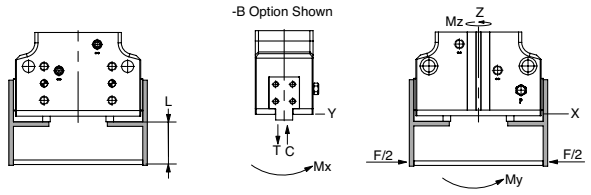

DPDL-175M	Static	Dynamic
Maximum Tensile **T**	5118 N [1150 lbs]	779 N [175 lbs]
Maximum Compressive **C**	10235 N [2300 lbs]	779 N [175 lbs]
Maximum Moment M_x	130 Nm [1150 in-lbs]	22 Nm [190 in-lbs]
Maximum Moment M_y	130 Nm [1150 in-lbs]	22 Nm [190 in-lbs]
Maximum Moment M_z	130 Nm [1150 in-lbs]	22 Nm [190 in-lbs]

†Capacities are per set of jaws and are not simultaneous

DPDL-175M-B	Static	Dynamic
Maximum Tensile **T**	4094 N [920 lbs]	623 N [140 lbs]
Maximum Compressive **C**	8188 N [1840 lbs]	623 N [140 lbs]
Maximum Moment M_x	104 Nm [920 in-lbs]	17 Nm [152 in-lbs]
Maximum Moment M_y	104 Nm [920 in-lbs]	17 Nm [152 in-lbs]
Maximum Moment M_z	104 Nm [920 in-lbs]	17 Nm [152 in-lbs]

†Capacities are per set of jaws and are not simultaneous

Dimensions and technical information are subject to change without notice

DPDL-250M, 250M-B

2-Jaw General Industrial Grippers | Dimensions and Technical Specifications

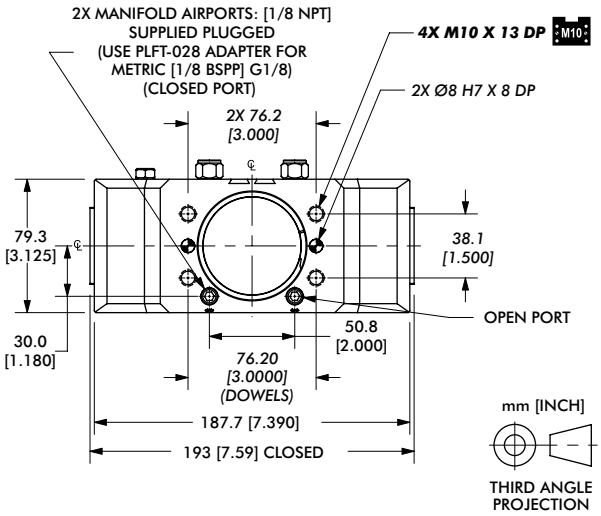

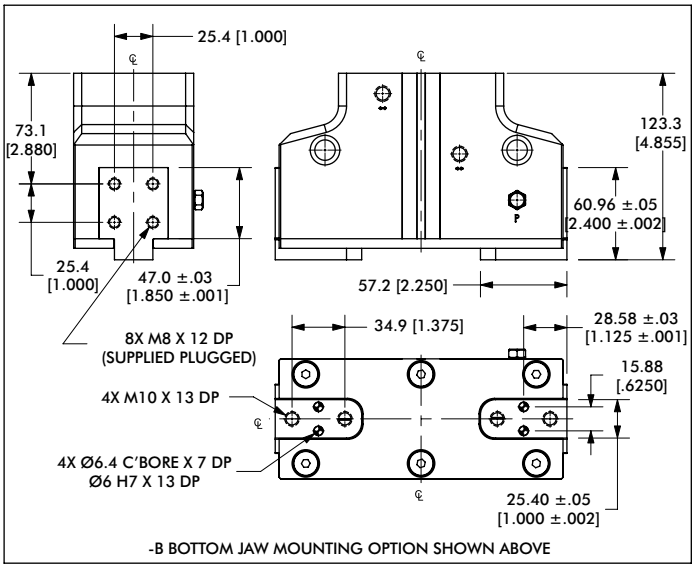

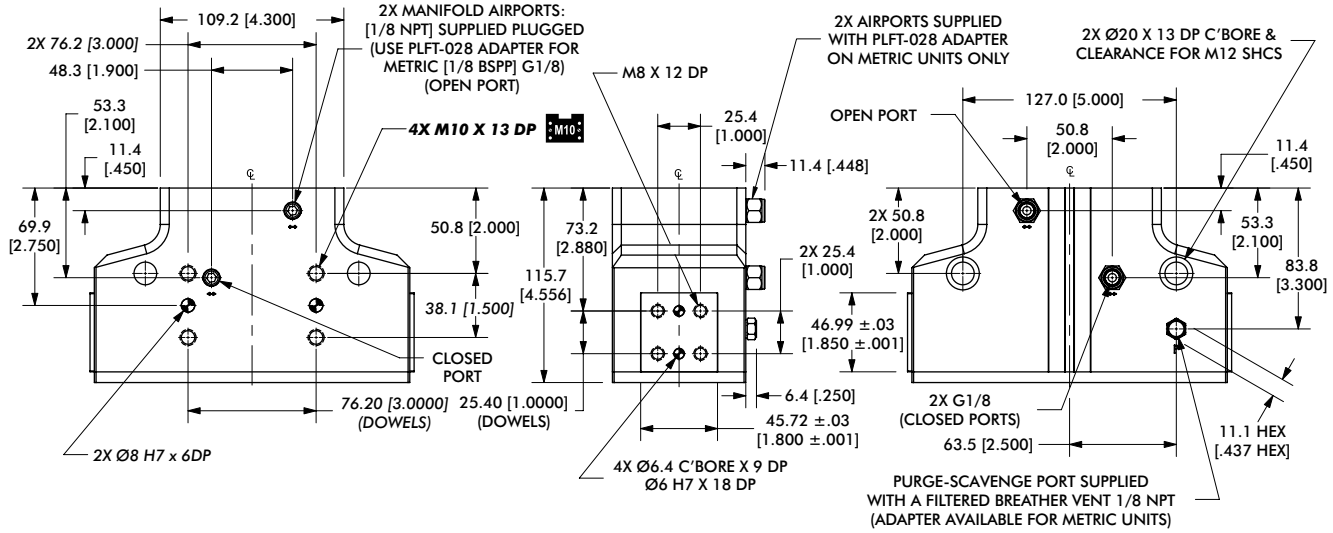

Loading Information

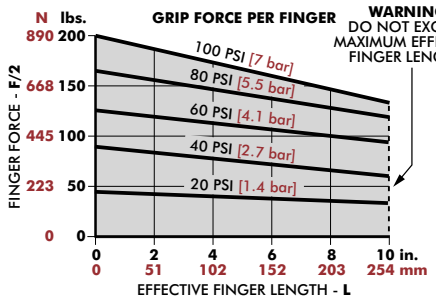

Seal Repair Kits	250M
Buna-N Seal Repair Kit	SLKT-190
Viton® Seal Repair Kit	SLKT-190V
Manifold Seal Kit (Viton® only)	SLKT-201V
Sealed Jaw Boot Replacement (1 Buna-N Boot only)	SLKT-196

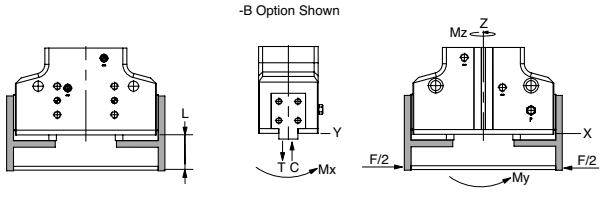

DPDL-250M	Static	Dynamic
Maximum Tensile **T**	9568 N [2150 lbs]	1224 N [275 lbs]
Maximum Compressive **C**	19135 N [4300 lbs]	1224 N [275 lbs]
Maximum Moment **Mx**	339 Nm [3000 in-lbs]	40 Nm [350 in-lbs]
Maximum Moment **My**	339 Nm [3000 in-lbs]	40 Nm [350 in-lbs]
Maximum Moment **Mz**	339 Nm [3000 in-lbs]	40 Nm [350 in-lbs]

†Capacities are per set of jaws and are not simultaneous

DPDL-250M-B	Static	Dynamic
Maximum Tensile **T**	7654 N [1720 lbs]	979 N [220 lbs]
Maximum Compressive **C**	15308 N [3440 lbs]	979 N [220 lbs]
Maximum Moment **Mx**	271 Nm [2400 in-lbs]	32 Nm [280 in-lbs]
Maximum Moment **My**	271 Nm [2400 in-lbs]	32 Nm [280 in-lbs]
Maximum Moment **Mz**	271 Nm [2400 in-lbs]	32 Nm [280 in-lbs]

†Capacities are per set of jaws and are not simultaneous

DPDS SERIES

2-Jaw General Industrial Grippers | Features and Benefits | How To Order

Features:

- Rugged general purpose modular gripper
- High impact resistant with double wedge design
- Finger mounting on end or bottom of jaws
- Thru-body mounting and multiple mounting features simplifies installation
- Multiple air ports support manifold interface using O-rings
- Purge/scavenge ports for harsh & clean environments
- Corrosion resistance hardware option

Applications:

- Compact, robust gripper for use in confined spaces requiring a high grip force
- Multiple part gripping using manifold feature to create gripper arrays
- Long finger gripping applications

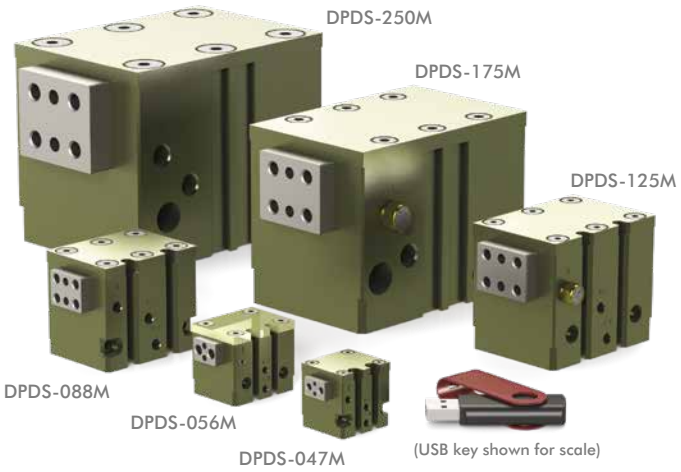

How To Order

Base Model
DPDS

Size
047M **125M**
056M **175M**
088M **250M**

Jaw Mounting Description
"Blank" End Jaw Mounting
B Bottom Jaw Mounting

Hardware Description
"Blank" Alloy
CR Corrosion Resistant with Clean Room Grade Grease

Seals Description
"Blank" Buna-N
V Viton® High Temperature

Stroke Stroke varies with size of gripper

047M	**006, 009 or 013**	125M	**019, 025 or 038**
056M	**009, 013 or 019**	175M	**025, 038 or 050**
088M	**013, 019 or 025**	250M	**038, 050 or 075**

Stroke dimensions

006	1.6mm [0.06]	**019**	4.8mm [0.19]	**050**	12.7mm [0.50]
009	2.4mm [0.09]	**025**	6.4mm [0.25]	**075**	19.1mm [0.75]
013	3.2mm [0.13]	**038**	9.5mm [0.38]		

Accessories

Sensor Accessories	Model Numbers	Part Number	Qty/Unit
PNP Magneto Resistive Sensor with Quick Disconnect*	047M, 056M, 088M, 125M	OHSP-017	1-2
NPN Magneto Resistive Sensor with Quick Disconnect*	047M, 056M, 088M, 125M	OHSN-017	1-2
PNP Magneto Resistive Sensor with Quick Disconnect*	175M, 250M	OHSP-015	1-2
NPN Magneto Resistive Sensor with Quick Disconnect*	175M, 250M	OHSN-015	1-2
PNP Magneto Resistive Sensor (90° barrel) w/Qk. Disc.*	047M, 056M, 088M, 125M	OHSP-011	1-2
NPN Magneto Resistive Sensor (90° barrel) w/Qk. Disc.*	047M, 056M, 088M, 125M	OHSN-011	1-2
Quick Disconnect 2 Meter Cable Length*	All Models	CABL-010	1-2
Quick Disconnect 5 Meter Cable Length*	All Models	CABL-013	1-2

Pneumatic Accessories	Model Numbers	Part Number	Qty/Unit
Plumbing Fitting - M3 male to 3mm OD Tube Push-in Style	047M, 056M	PLFT-021	1-2
Plumbing Fitting - M3 male to 2mm ID Tube Barb Style	047M, 056M	PLFT-022	1-2
Plumbing Fitting - 1/8 NPT Male to 1/8 BSPP Female	125M, 250M	PLFT-028	1-2
Adjustable Flow Control G 1/8 Elbow - 6mm OD Push-in	125M, 250M	VLVF-005	1-2
Adjustable Flow Control M5 Elbow - 6mm OD Push-in	088M, 125M	VLVF-008	1-2
Fail Safe Valve M5	088M, 125M	OFSV-004	1
Fail Safe Valve G 1/8 (1/8 BSPP)	175M, 250M	OFSV-005	1

*Sensor and cable sold separately.

2-Jaw General Industrial Grippers | Technical Specifications

Specifications	Units	047M	056M	088M
Total Rated Grip Force **F** @ 100 psi	N [lbs]	62 [14]	98 [22]	222 [50]
Total Stroke	mm [in]	3.2 [0.13]	4.8 [0.19]	6.4 [0.25]
Weight	kg [lbs]	0.086 [0.04]	0.155 [0.07]	0.23 [0.51]
Pressure Range	bar [psi]	1.5-7 [20-100]		
Max. Vacuum for Scavenge Port	mm Hg [in. Hg]	200 [8]		
Max. Pressure for Purge Port	bar [psi]	1.4 [20]		
Ingress Protection Class (IP)		IP54		
Displacement	cm^3 [in^3]	0.2 [0.013]	0.5 [0.028]	1.5 [0.090]
Temperature Range (Buna-N seals)	°C [°F]	-35°~80° [-30°~180°]		
Temperature Range (Viton® seals)	°C [°F]	-30°~150° [-20°~300°]		
Actuation	sec	0.13	0.16	0.20
Accuracy	mm [in]	±0.05 [±0.002]		
Repeatability	mm [in]	±0.03 [±0.001]		
Valve to Actuate Double Acting		4-way, 2-position		

Specifications	Units	125M	175M	250M
Total Rated Grip Force **F** @ 100 psi	N [lbs]	445 [100]	890 [200]	1779 [400]
Total Stroke	mm [in]	9.5 [0.38]	12.7 [0.50]	19.1 [0.75]
Weight	kg [lbs]	0.46 [1.03]	1.68 [3.70]	2.76 [6.08]
Pressure Range	bar [psi]	1.5-7 [20-100]		
Max. Vacuum for Scavenge Port	mm Hg [in. Hg]	200 [8]		
Max. Pressure for Purge Port	bar [psi]	1.4 [20]		
Ingress Protection Class (IP)		IP54		
Displacement	cm^3 [in^3]	4.5 [0.274]	11.7 [0.717]	36.0 [2.194]
Temperature Range (Buna-N seals)	°C [°F]	-35°~80° [-30°~180°]		
Temperature Range (Viton® seals)	°C [°F]	-30°~150° [-20°~300°]		
Actuation	sec	0.30	0.40	0.50
Accuracy	mm [in]	±0.08 [±0.003]		
Repeatability	mm [in]	±0.03 [±0.001]		
Valve to Actuate Double Acting		4-way, 2-position		

DPDS-047M, 047M-B

2-Jaw General Industrial Grippers | Dimensions and Technical Specifications

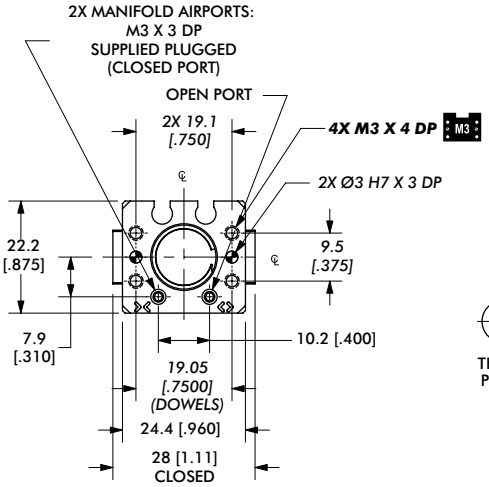

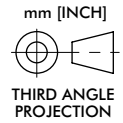

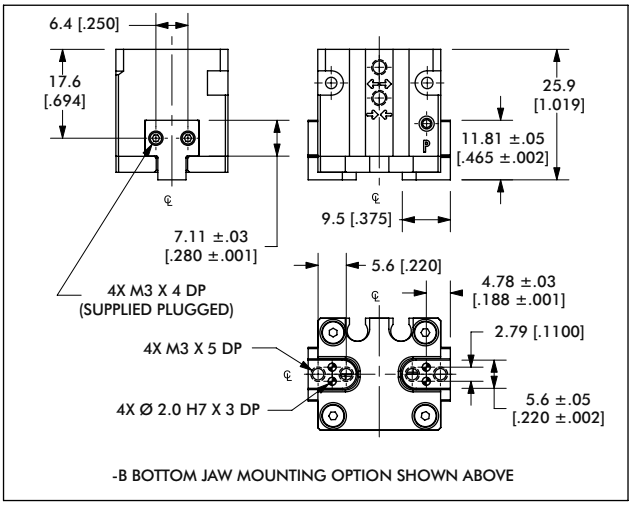

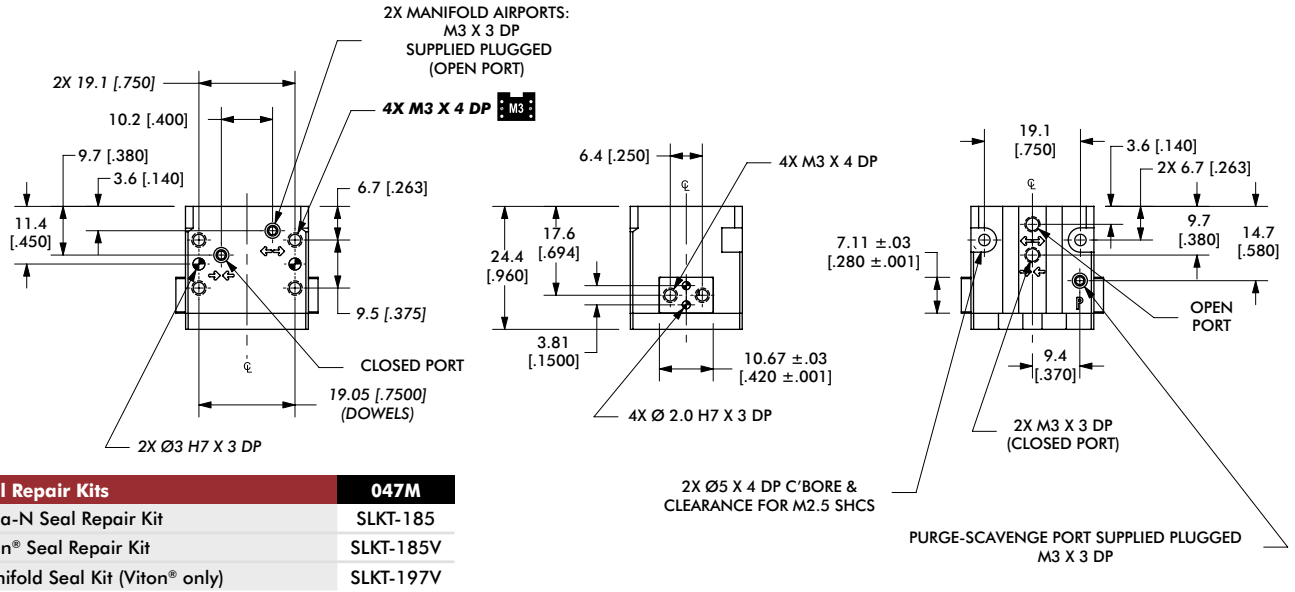

Seal Repair Kits	047M
Buna-N Seal Repair Kit	SLKT-185
Viton® Seal Repair Kit	SLKT-185V
Manifold Seal Kit (Viton® only)	SLKT-197V

Loading Information

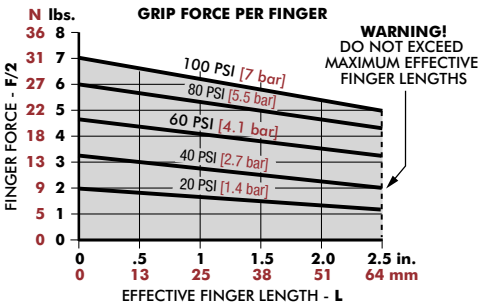

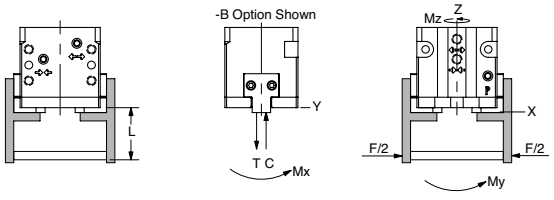

DPDS-047M	Static	Dynamic
Maximum Tensile **T**	134 N [30 lbs]	27 N [6 lbs]
Maximum Compressive **C**	223 N [50 lbs]	45 N [10 lbs]
Maximum Moment **Mx**	2 Nm [20 in-lbs]	0.6 Nm [5 in-lbs]
Maximum Moment **My**	2 Nm [20 in-lbs]	0.6 Nm [5 in-lbs]
Maximum Moment **Mz**	2 Nm [20 in-lbs]	0.6 Nm [5 in-lbs]

†Capacities are per set of jaws and are not simultaneous

DPDS-047M-B	Static	Dynamic
Maximum Tensile **T**	107 N [24 lbs]	22 N [5 lbs]
Maximum Compressive **C**	178 N [40 lbs]	36 N [8 lbs]
Maximum Moment **Mx**	2 Nm [16 in-lbs]	0.5 Nm [4 in-lbs]
Maximum Moment **My**	2 Nm [16 in-lbs]	0.5 Nm [4 in-lbs]
Maximum Moment **Mz**	2 Nm [16 in-lbs]	0.5 Nm [4 in-lbs]

†Capacities are per set of jaws and are not simultaneous

DPDS-056M, 056M-B

2-Jaw General Industrial Grippers | Dimensions and Technical Specifications

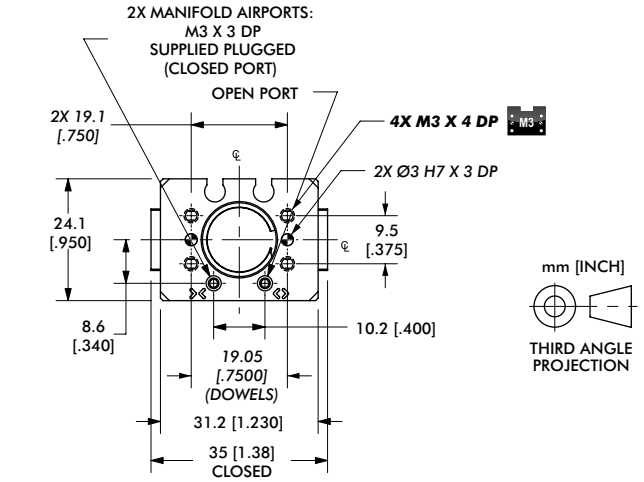

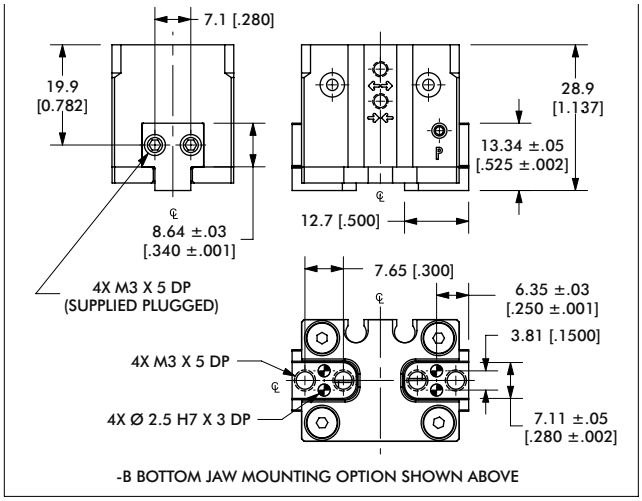

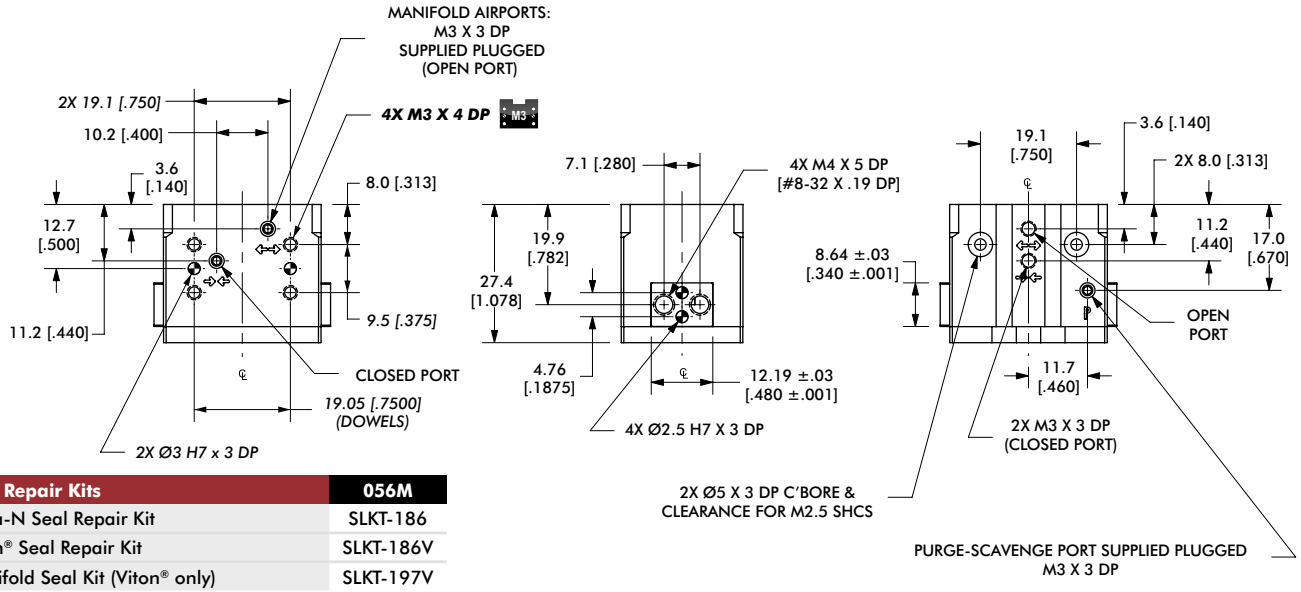

Seal Repair Kits	056M
Buna-N Seal Repair Kit	SLKT-186
Viton® Seal Repair Kit	SLKT-186V
Manifold Seal Kit (Viton® only)	SLKT-197V

Loading Information

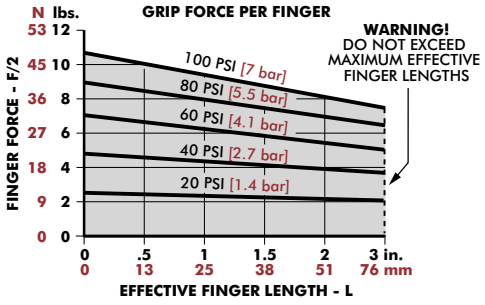

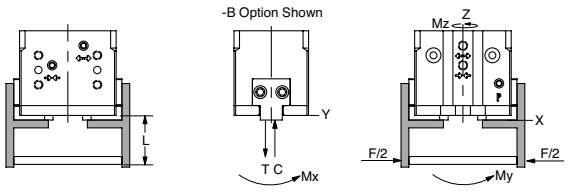

DPDS-056M	Static	Dynamic
Maximum Tensile **T**	267 N [60 lbs]	45 N [10 lbs]
Maximum Compressive **C**	401 N [90 lbs]	67 N [15 lbs]
Maximum Moment M_X	5 Nm [40 in-lbs]	0.8 Nm [7 in-lbs]
Maximum Moment M_Y	5 Nm [40 in-lbs]	0.8 Nm [7 in-lbs]
Maximum Moment M_Z	5 Nm [40 in-lbs]	0.8 Nm [7 in-lbs]

†Capacities are per set of jaws and are not simultaneous

DPDS-056M-B	Static	Dynamic
Maximum Tensile **T**	214 N [48 lbs]	36 N [8 lbs]
Maximum Compressive **C**	320 N [72 lbs]	53 N [12 lbs]
Maximum Moment M_X	4 Nm [32 in-lbs]	1 Nm [6 in-lbs]
Maximum Moment M_Y	4 Nm [32 in-lbs]	1 Nm [6 in-lbs]
Maximum Moment M_Z	4 Nm [32 in-lbs]	1 Nm [6 in-lbs]

†Capacities are per set of jaws and are not simultaneous

DPDS-088M, 088M-B

2-Jaw General Industrial Grippers | Dimensions and Technical Specifications

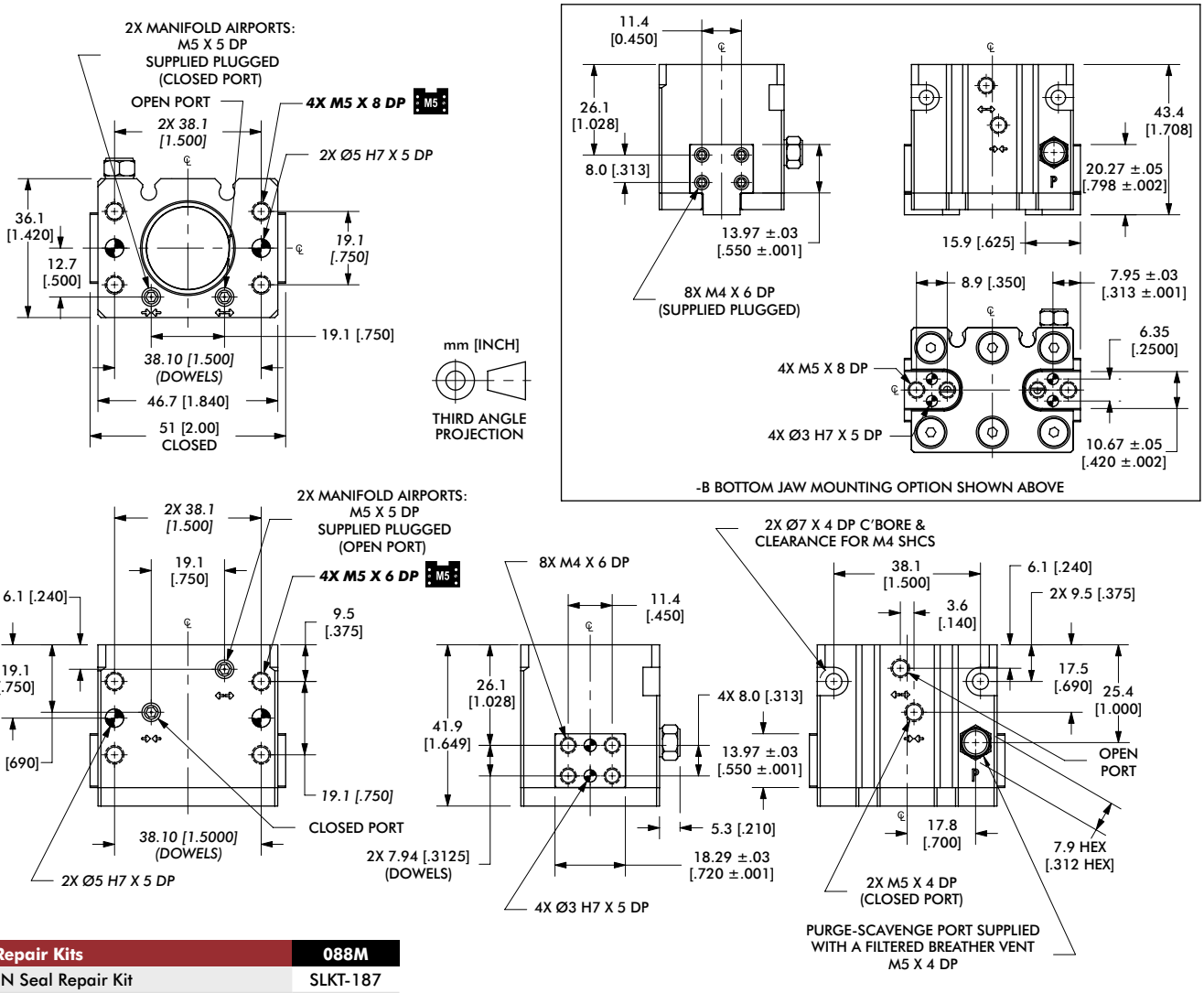

Seal Repair Kits	088M
Buna-N Seal Repair Kit	SLKT-187
Viton® Seal Repair Kit	SLKT-187V
Manifold Seal Kit (Viton® only)	SLKT-199V

Loading Information

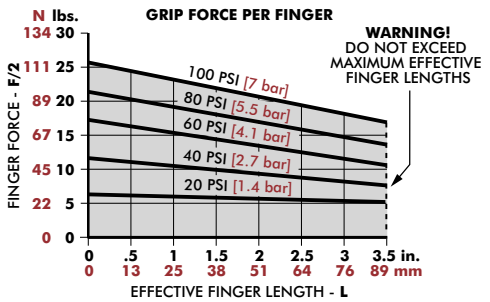

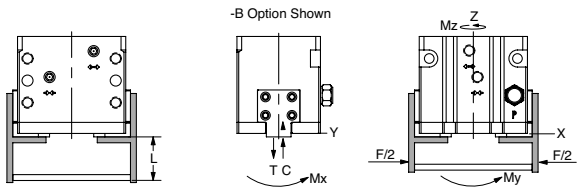

DPDS-088M	Static	Dynamic
Maximum Tensile **T**	614 N [138 lbs]	111 N [25 lbs]
Maximum Compressive **C**	1224 N [275 lbs]	111 N [25 lbs]
Maximum Moment M_x	14 Nm [120 in-lbs]	2 Nm [20 in-lbs]
Maximum Moment **My**	14 Nm [120 in-lbs]	2 Nm [20 in-lbs]
Maximum Moment M_z	14 Nm [120 in-lbs]	2 Nm [20 in-lbs]

†Capacities are per set of jaws and are not simultaneous

DPDS-088M-B	Static	Dynamic
Maximum Tensile **T**	490 N [110 lbs]	89 N [20 lbs]
Maximum Compressive **C**	979 N [220 lbs]	89 N [20 lbs]
Maximum Moment M_x	11 Nm [96 in-lbs]	2 Nm [16 in-lbs]
Maximum Moment **My**	11 Nm [96 in-lbs]	2 Nm [16 in-lbs]
Maximum Moment M_z	11 Nm [96 in-lbs]	2 Nm [16 in-lbs]

†Capacities are per set of jaws and are not simultaneous

DPDS-125M, 125M-B

2-Jaw General Industrial Grippers | Dimensions and Technical Specifications

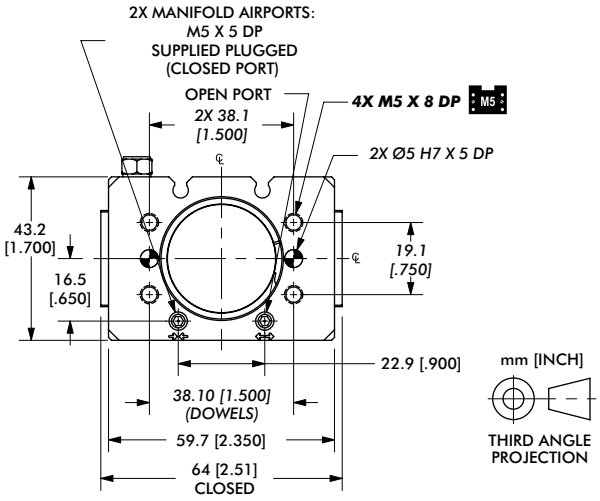

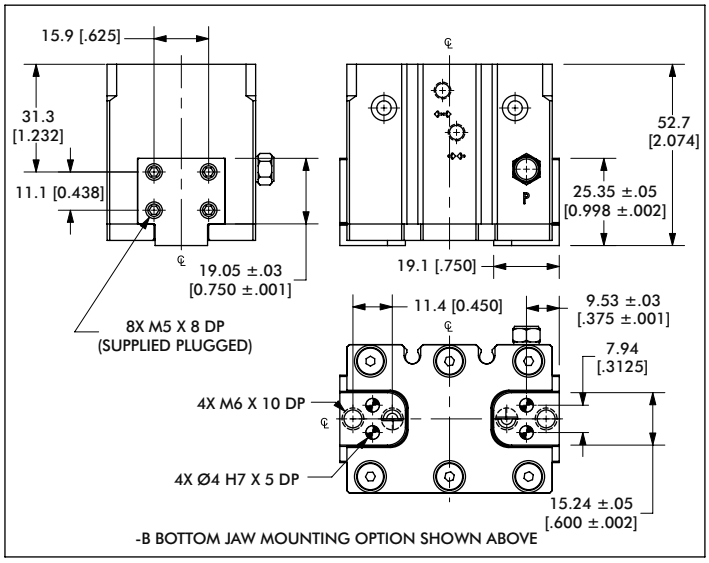

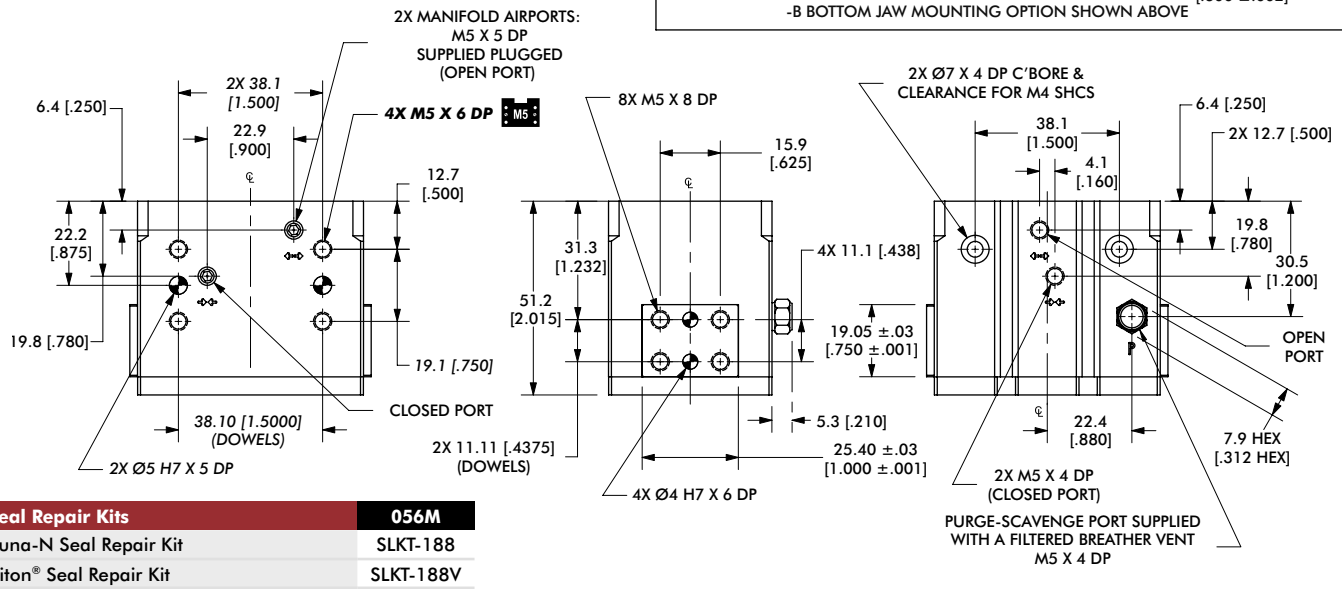

Seal Repair Kits	056M
Buna-N Seal Repair Kit	SLKT-188
Viton® Seal Repair Kit	SLKT-188V
Manifold Seal Kit (Viton® only)	SLKT-199V

Loading Information

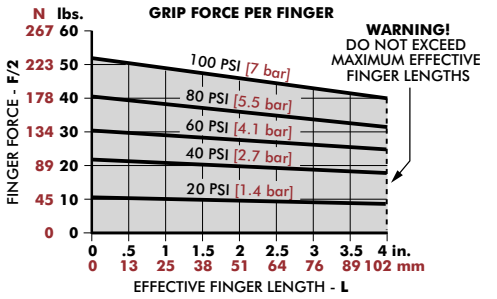

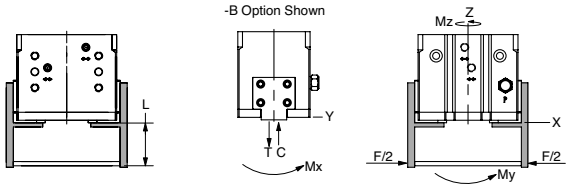

DPDS-125M	Static	Dynamic
Maximum Tensile **T**	2225 N [500 lbs]	289 N [65 lbs]
Maximum Compressive **C**	4228 N [950 lbs]	289 N [65 lbs]
Maximum Moment **Mx**	48 Nm [425 in-lbs]	8 Nm [70 in-lbs]
Maximum Moment **My**	48 Nm [425 in-lbs]	8 Nm [70 in-lbs]
Maximum Moment **Mz**	48 Nm [425 in-lbs]	8 Nm [70 in-lbs]

†Capacities are per set of jaws and are not simultaneous

DPDS-125M-B	Static	Dynamic
Maximum Tensile **T**	1780 N [400 lbs]	231 N [52 lbs]
Maximum Compressive **C**	3382 N [760 lbs]	231 N [52 lbs]
Maximum Moment **Mx**	[8 Nm [340 in-lbs]	6 Nm [56 in-lbs]
Maximum Moment **My**	38 Nm [340 in-lbs]	6 Nm [56 in-lbs]
Maximum Moment **Mz**	38 Nm [340 in-lbs]	6 Nm [56 in-lbs]

†Capacities are per set of jaws and are not simultaneous

DPDS-175M, 175M-B

2-Jaw General Industrial Grippers | Dimensions and Technical Specifications

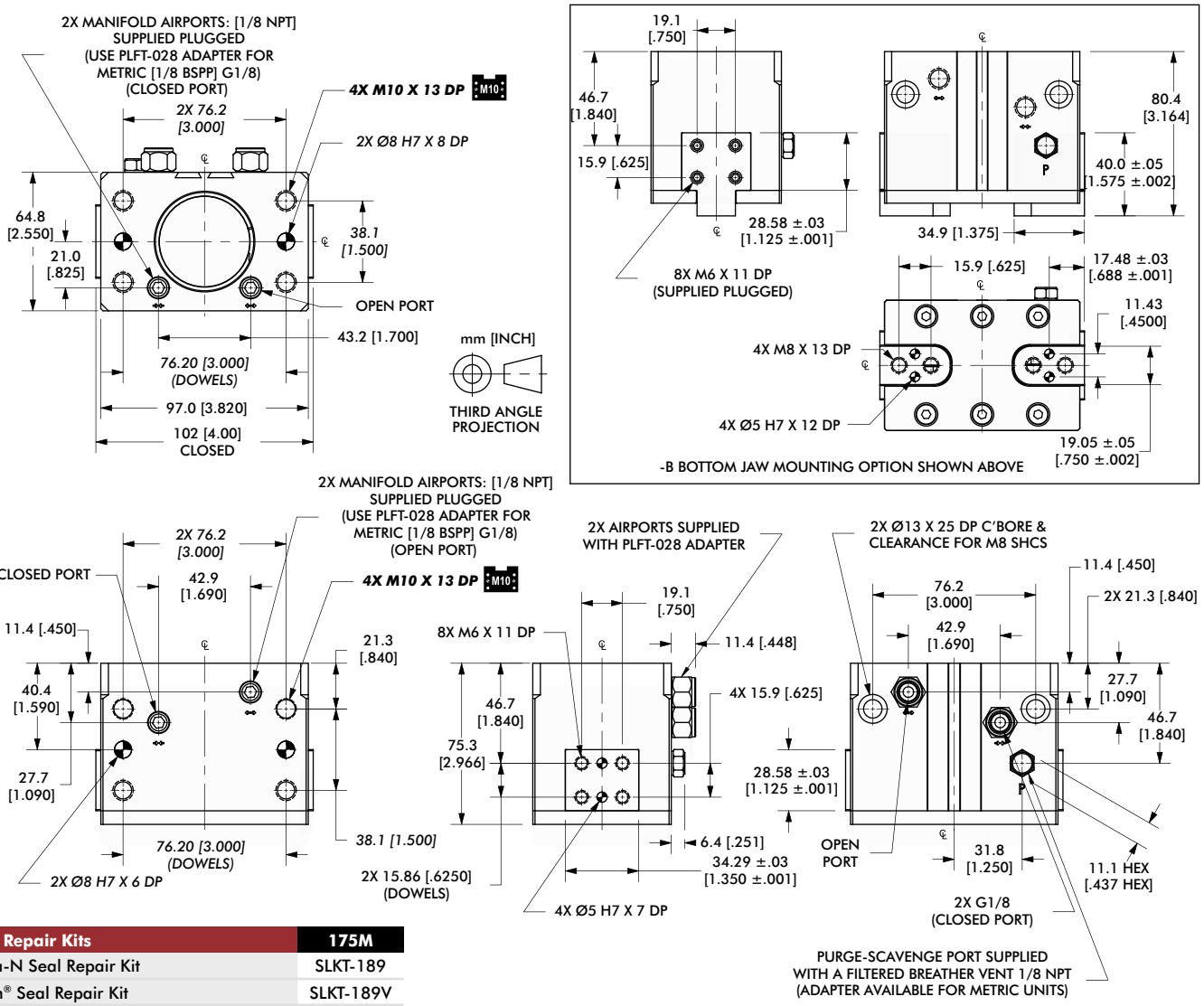

Seal Repair Kits	175M
Buna-N Seal Repair Kit	SLKT-189
Viton® Seal Repair Kit	SLKT-189V
Manifold Seal Kit (Viton® only)	SLKT-201V

Loading Information

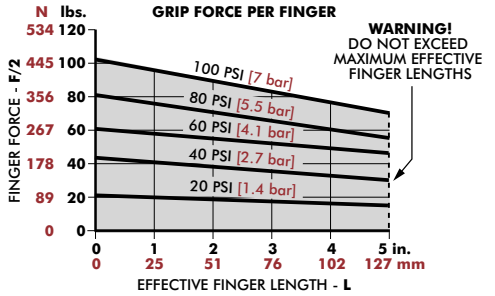

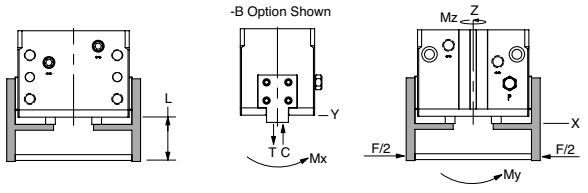

DPDS-175M	Static	Dynamic
Maximum Tensile **T**	4450 N [1000 lbs]	668 N [150 lbs]
Maximum Compressive **C**	8900 N [2000 lbs]	668 N [150 lbs]
Maximum Moment M_X	113 Nm [1000 in-lbs]	20 Nm [175 in-lbs]
Maximum Moment **My**	113 Nm [1000 in-lbs]	20 Nm [175 in-lbs]
Maximum Moment M_Z	113 Nm [1000 in-lbs]	20 Nm [175 in-lbs]

†Capacities are per set of jaws and are not simultaneous

DPDS-175M-B	Static	Dynamic
Maximum Tensile **T**	3560 N [800 lbs]	534 N [120 lbs]
Maximum Compressive **C**	7120 N [1600 lbs]	534 N [120 lbs]
Maximum Moment M_X	90 Nm [800 in-lbs]	16 Nm [140 in-lbs]
Maximum Moment **My**	90 Nm [800 in-lbs]	16 Nm [140 in-lbs]
Maximum Moment M_Z	90 Nm [800 in-lbs]	16 Nm [140 in-lbs]

†Capacities are per set of jaws and are not simultaneous

Dimensions and technical information are subject to change without notice

DPDS-250M, 250M-B

2-Jaw General Industrial Grippers | Dimensions and Technical Specifications

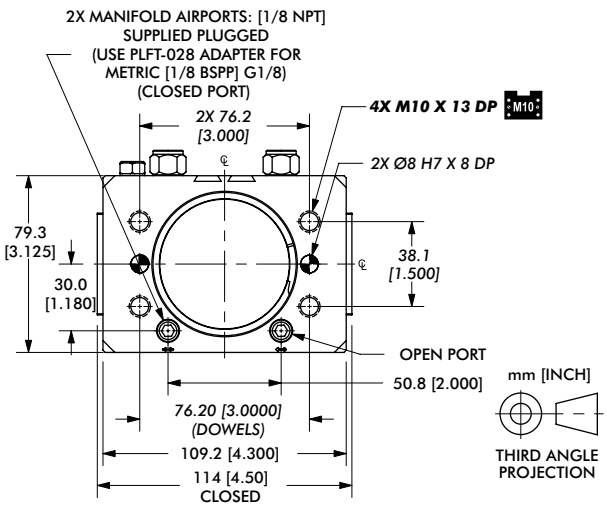

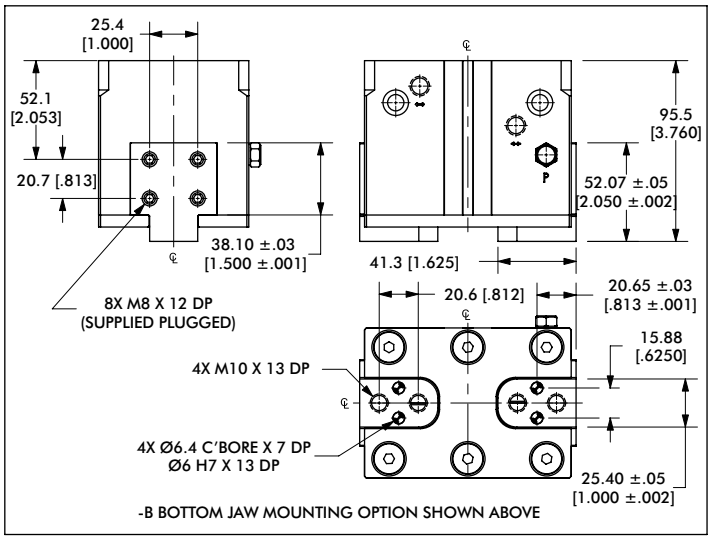

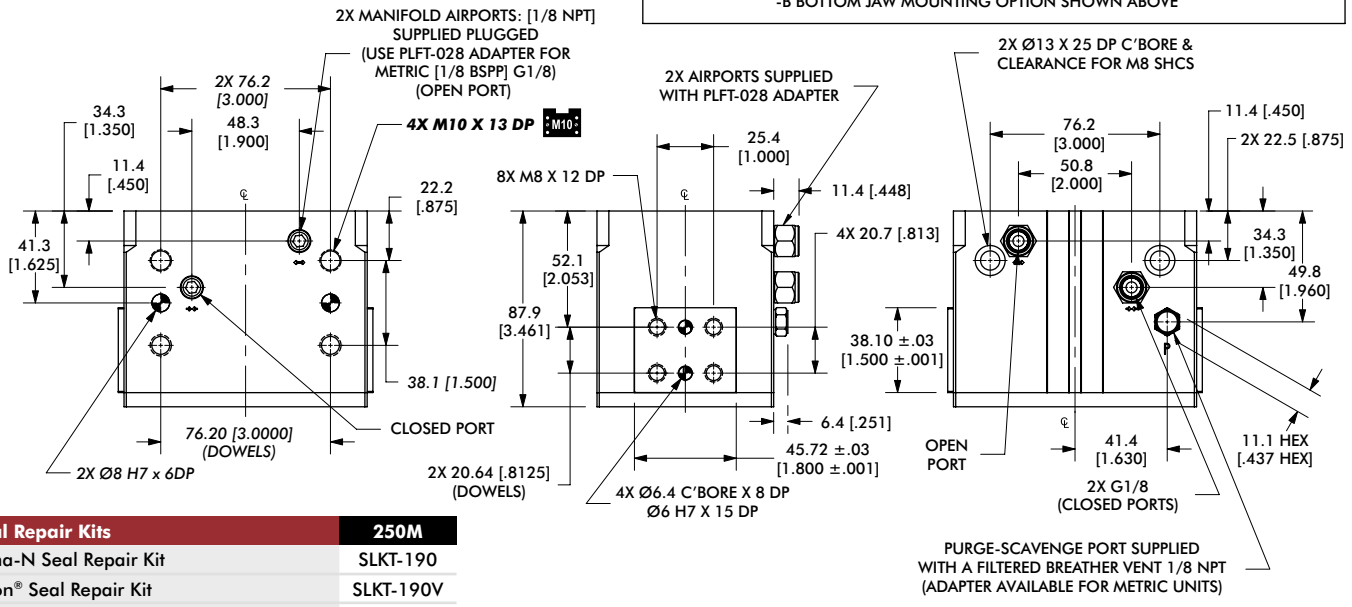

Seal Repair Kits	250M
Buna-N Seal Repair Kit	SLKT-190
Viton® Seal Repair Kit	SLKT-190V
Manifold Seal Kit (Viton® only)	SLKT-201V

Loading Information

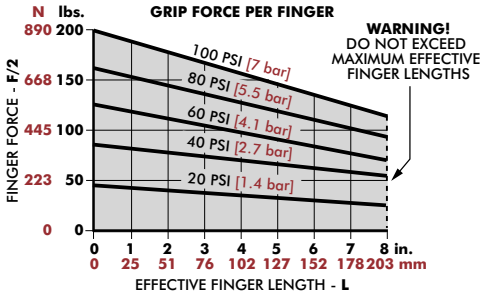

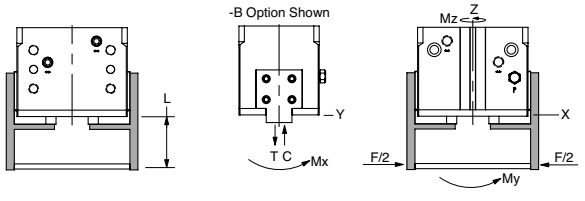

DPDS-250M	Static	Dynamic
Maximum Tensile **T**	5785 N [1300 lbs]	979 N [220 lbs]
Maximum Compressive **C**	12015 N [2700 lbs]	979 N [220 lbs]
Maximum Moment M_X	153 Nm [1350 in-lbs]	25 Nm [225 in-lbs]
Maximum Moment **My**	153 Nm [1350 in-lbs]	25 Nm [225 in-lbs]
Maximum Moment M_Z	153 Nm [1350 in-lbs]	25 Nm [225 in-lbs]

†Capacities are per set of jaws and are not simultaneous

DPDS-250M-B	Static	Dynamic
Maximum Tensile **T**	4628 N [1040 lbs]	783 N [176 lbs]
Maximum Compressive **C**	9612 N [2160 lbs]	783 N [176 lbs]
Maximum Moment M_X	122 Nm [1080 in-lbs]	20 Nm [180 in-lbs]
Maximum Moment **My**	122 Nm [1080 in-lbs]	20 Nm [180 in-lbs]
Maximum Moment M_Z	122 Nm [1080 in-lbs]	20 Nm [180 in-lbs]

†Capacities are per set of jaws and are not simultaneous

DPG SERIES

2-Jaw General Industrial Grippers | Features and Benefits | How To Order

Features:

- Rugged general purpose modular gripper
- Multi-position sensing up to 4 locations
- Shielded gripper to repel metal chips and particulates
- Spring assist option maintains grip in case of air pressure loss
- Synchronous or non-synchronous jaw operation
- Multiple air ports support manifold interface using O-rings
- Two finger mounting surfaces on each jaw

Applications:

- CNC Machining applications
- Chip and dry particulate harsh environments
- Non-synchronous jaw or fixed jaw clamp operations



How To Order

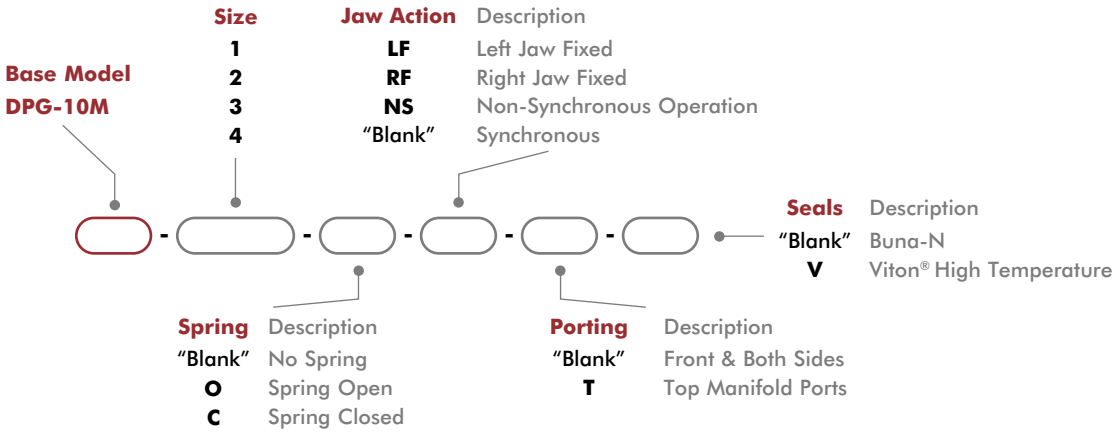

Dimensions and technical information are subject to change without notice

Sensor Accessories	Model Numbers	Part Number	Qty/Unit
Inductive Sensor Mounting Kit (Mounts 2 Sensors)	All Models	OSMK-097	1-2
NPN Inductive Sensor with Qk. Disconnect*	All Models	OISN-019	1-4
PNP Inductive Sensor with Qk. Disconnect*	All Models	OISP-019	1-4
NPN Magneto Resistive Sensor w/Qk. Disconnect*	All Models	OHSN-017	1-4
PNP Magneto Resistive Sensor w/Qk. Disconnect*	All Models	OHSP-017	1-4
NPN Magneto Resistive Sensor (90°) w/Qk. Disconnect*	All Models	OHSN-011	1-4
PNP Magneto Resistive Sensor (90°) w/Qk. Disconnect*	All Models	OHSP-011	1-4
Quick Disconnect Cable (2 meters long)*	All Models	CABL-010	1-4
Quick Disconnect Cable (5 meters long)*	All Models	CABL-013	1-4
Quick Disconnect Cable Extension Cord (1 meter long)*	All Models	CABL-015	1-4
Quick Disconnect Cable Extension Cord (2 meters long)*	All Models	CABL-016	1-4

Pneumatic Accessories	Model Numbers	Part Number	Qty/Unit
Buna-N Seal Repair Kit	All Models	SLKT-183	1
Viton® Seal Repair Kit	All Models	SLKT-183V	1
-T Plumbing Fitting - M3 male to 3mm OD Tube Push-in Style	All Models	PLFT-021	1-2
-T Plumbing Fitting - M3 male to 2mm ID Tube Barb Style	All Models	PLFT-022	1-2
Fail Safe Valve - M5 (Metric)	All Models	OFSV-004	1
Adjustable Flow Control (Metric)	All Models	VLVF-008	1-2
Top Port Manifold Seal Kit	All Models	SLKT-184V	1

* Sensor and cable sold separately.

Specifications

Specifications	Units	10M-1	10M-2	10M-3	10M-4
Total Rated Grip Force **F** @ 100 psi [7 bar]	N [lbs]	222 [50]			
Total Stroke	mm [in]	6.4 [0.25]	12.7 [0.50]	19.1 [0.75]	25.4 [1.00]
Weight	kg [lbs]	0.17 [0.39]	0.24 [0.53]	0.68 [0.30]	0.81 [0.36]
Pressure Range (without spring)	bar [psi]	3-7 [40-100]			
Pressure Range (with spring)	bar [psi]	1.4-7 [20-100]		3.4-7 [50-100]	
Ingress Protection Class (IP)		IP54			
Displacement	cm^3 [in^3]	1.2 [0.076]	2.5 [0.153]	3.8 [0.230]	5.0 [0.306]
Temperature Range (Buna-N seals)	°C [°F]	-35°~80° [-30°~180°]			
Temperature Range (Viton® seals)	°C [°F]	-30°~150° [-20°~300°]			
Actuation	sec	0.13	0.19	0.29	0.40
Accuracy	mm [in]	±0.05 [±0.002]			
Repeatability	mm [in]	±0.05 [±0.002]			
Valve to Actuate Double Acting		4-way, 2-position			

DPG-10M

2-Jaw General Industrial Grippers | Dimensions and Technical Specifications

Model	A	B	C	D
DPG-10M-1	50.8 [2.000]	62.0 [2.44]	55.6 [2.19]	29.2 [1.15]
DPG-10M-2	68.3 [2.688]	85.6 [3.37]	72.9 [2.87]	36.8 [1.45]
DPG-10M-3	88.9 [3.500]	112.8 [4.44]	93.7 [3.69]	55.9 [2.20]
DPG-10M-4	106.4 [4.188]	136.7 [5.38]	111.3 [4.38]	61.7 [2.43]

Dimensions in mm [in]

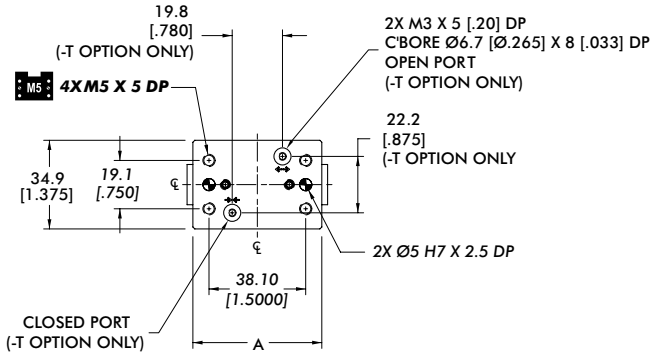

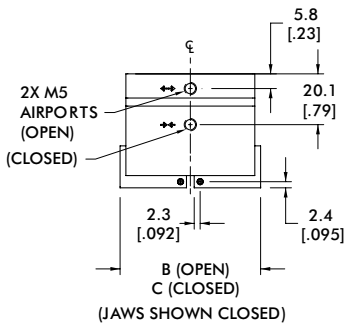

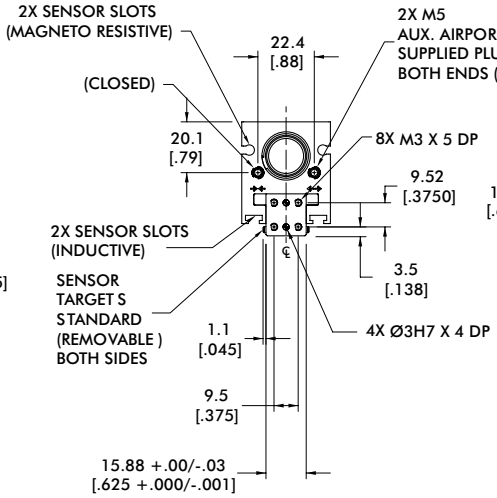

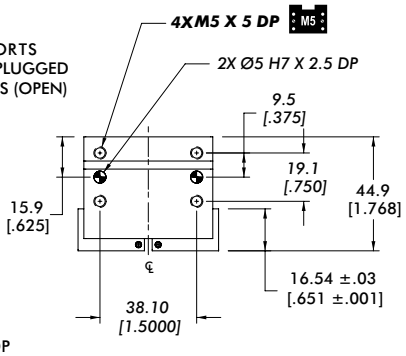

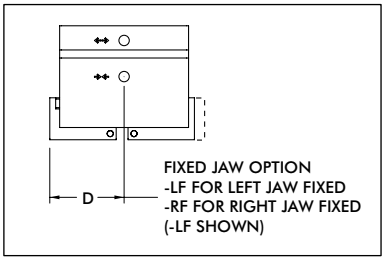

mm [INCH]

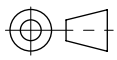

THIRD ANGLE
PROJECTION

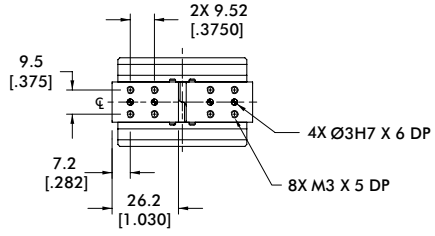

DPG-10M-1

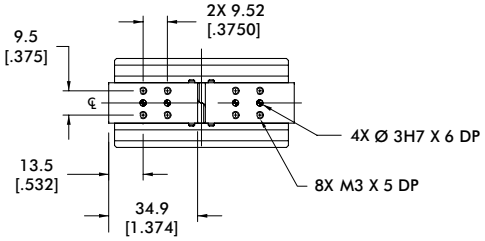

DPG-10M-2

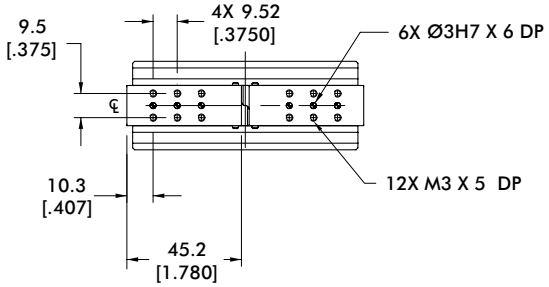

DPG-10M-3

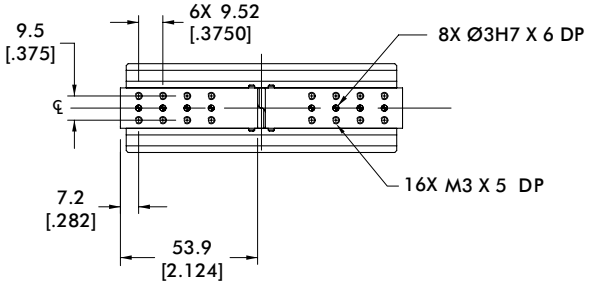

DPG-10M-4

Dimensions and technical information are subject to change without notice

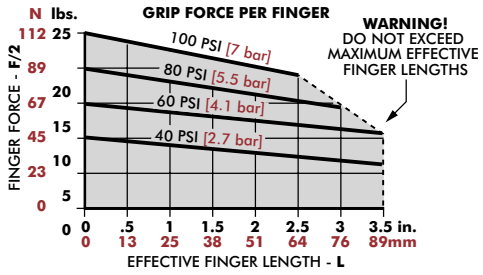

Total Additional Grip Force	Spring Open	Spring Close
@ Full Open	26 N [6 lbs]	40 N [9 lbs]
@ Full Close	49 N [11 lbs]	26 N [6 lbs]

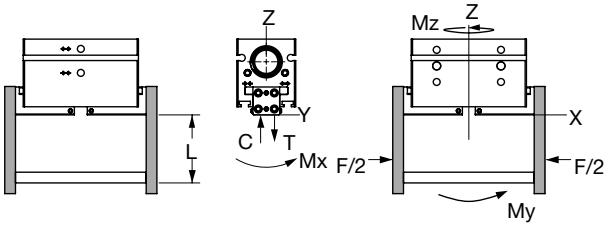

DPG-10M-1	Static	Dynamic
Maximum Tensile **T**	778 N [175 lbs]	89 N [20 lbs]
Maximum Compressive **C**	1779 N [400 lbs]	89 N [20 lbs]
Maximum Moment M_x	17 Nm [150 in-lbs]	2 Nm [20 in-lbs]
Maximum Moment M_y	20 Nm [175 in-lbs]	3 Nm [30 in-lbs]
Maximum Moment M_z	17 Nm [150 in-lbs]	2 Nm [20 in-lbs]

†Capacities are per set of jaws and are not simultaneous

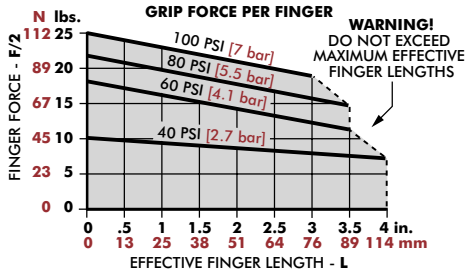

Total Additional Grip Force	Spring Open	Spring Close
@ Full Open	26 N [6 lbs]	62 N [14 lbs]
@ Full Close	66 N [15 lbs]	26 N [6 lbs]

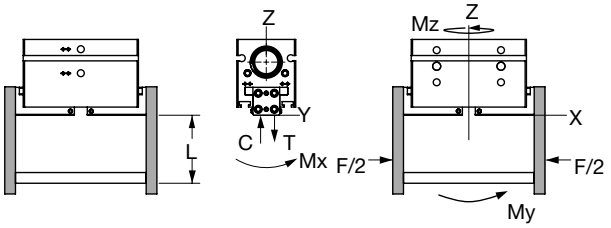

DPG-10M-2	Static	Dynamic
Maximum Tensile **T**	890 N [200 lbs]	111 N [25 lbs]
Maximum Compressive **C**	1890 N [425 lbs]	111 N [25 lbs]
Maximum Moment M_x	20 Nm [175 in-lbs]	3 Nm [25 in-lbs]
Maximum Moment M_y	23 Nm [200 in-lbs]	4 Nm [35 in-lbs]
Maximum Moment M_z	20 Nm [175 in-lbs]	3 Nm [25 in-lbs]

†Capacities are per set of jaws and are not simultaneous

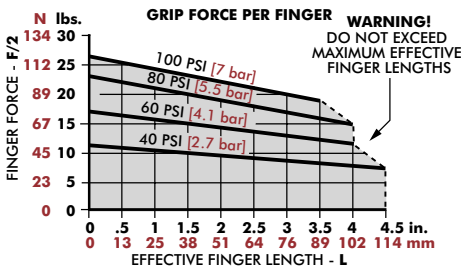

Total Additional Grip Force	Spring Open	Spring Close
@ Full Open	26 N [6 lbs]	66 N [15 lbs]
@ Full Close	102 N [23 lbs]	26 N [6 lbs]

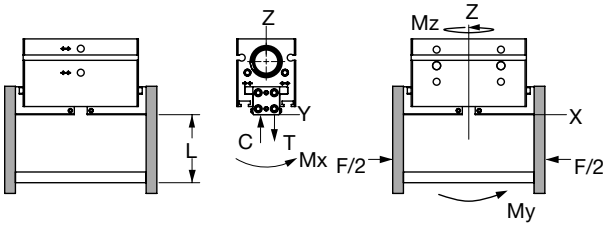

DPG-10M-3	Static	Dynamic
Maximum Tensile **T**	1001 N [225 lbs]	133 N [30 lbs]
Maximum Compressive **C**	2002 N [450 lbs]	133 N [30 lbs]
Maximum Moment M_x	23 Nm [200 in-lbs]	3 Nm [30 in-lbs]
Maximum Moment M_y	25 Nm [225 in-lbs]	5 Nm [40 in-lbs]
Maximum Moment M_z	23 Nm [200 in-lbs]	3 Nm [30 in-lbs]

†Capacities are per set of jaws and are not simultaneous

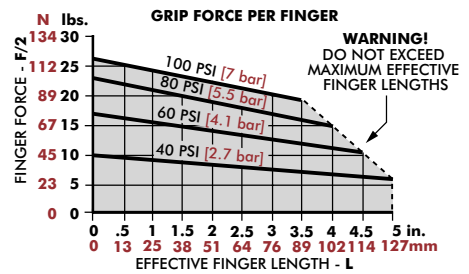

Total Additional Grip Force	Spring Open	Spring Close
@ Full Open	26 N [6 lbs]	66 N [15 lbs]
@ Full Close	97 N [22 lbs]	26 N [6 lbs]

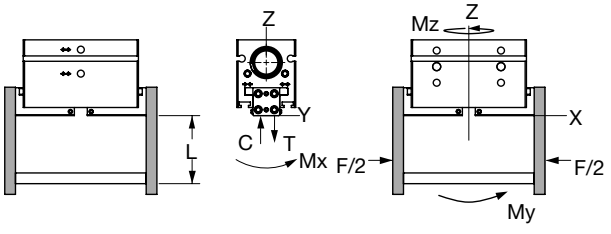

DPG-10M-4	Static	Dynamic
Maximum Tensile **T**	1112 N [250 lbs]	156 N [35 lbs]
Maximum Compressive **C**	2113 N [475 lbs]	156 N [35 lbs]
Maximum Moment M_x	25 Nm [225 in-lbs]	4 Nm [35 in-lbs]
Maximum Moment M_y	28 Nm [250 in-lbs]	5 Nm [45 in-lbs]
Maximum Moment M_z	25 Nm [225 in-lbs]	4 Nm [35 in-lbs]

†Capacities are per set of jaws and are not simultaneous

RDH SERIES

2-Jaw General Industrial Grippers | Features and Benefits | How To Order

Features:

- Rugged multi-purpose powerful gripper
- 8 sizes for small lightweight to very large and heavy part gripping
- High impact resistant with double wedge design
- Shielded gripper to repel metal chips and particulates
- Spring assist option maintains grip in case of air pressure loss
- Purge and scavenge ports for harsh & clean environments
- Multi-position sensing up to 4 locations

Applications:

- High particulate application environments
- Automotive engine block and gantry systems
- Ideal for very heavy part gripping

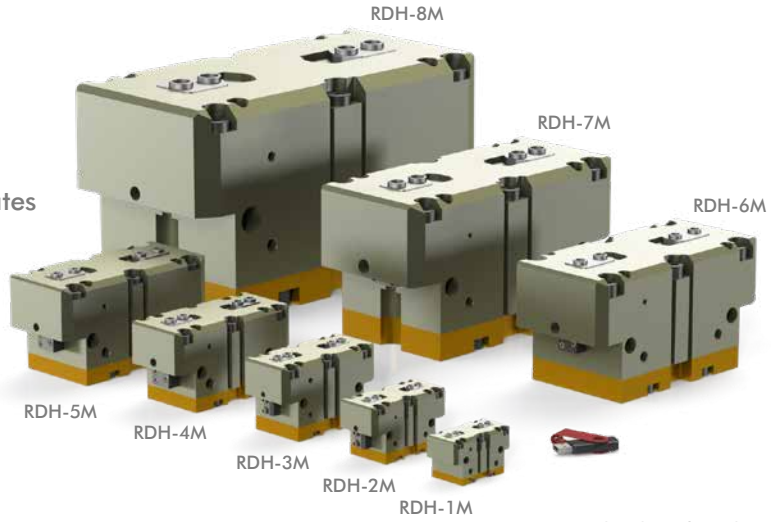

(USB key shown for scale)

How To Order

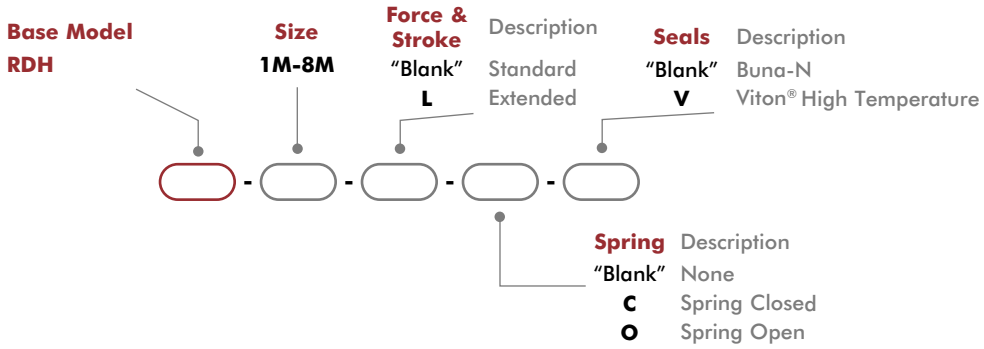

Accessories

Sensor Accessories	Model Numbers	Part Number	Qty/Unit
8mm PNP Magneto Resistive Sensor (90° barrel) w/ M8 Qk. Disc*	All Models	OHSP-011	1-4
8mm NPN Magneto Resistive Sensor (90° barrel) w/ M8 Qk. Disc*	All Models	OHSN-011	1-4
8mm PNP Magneto Resistive Sensor Short Barrel w/ M8 Qk Disc*	All Models	OHSP-017	1-4
8mm NPN Magneto Resistive Sensor Short Barrel w/ M8 Qk Disc*	All Models	OHSN-017	1-4
8mm PNP Inductive Sensor w/ M8 Quick Disconnect*	RDH-4M, -5M, -6M	OISP-011	1-2
8mm NPN Inductive Sensor w/ M8 Quick Disconnect*	RDH-4M, -5M, -6M	OISN-011	1-2
12mm PNP Inductive Sensor w/ M12 Quick Disconnect*	RDH-7M, -8M	OISP-017	1-2
12mm NPN Inductive Sensor w/ M12 Quick Disconnect*	RDH-7M, -8M	OISN-017	1-2
M8 Quick Disconnect 2 Meter Cable Length*	All Models	CABL-010	1-4
M8 Quick Disconnect 5 Meter Cable Length*	All Models	CABL-013	1-4
M12 Quick Disconnect 2 Meter Cable Length*	RDH-7M, -8M	CABL-014	1-2
M12 Quick Disconnect 5 Meter Cable Length*	RDH-7M, -8M	CABL-018	1-2

Pneumatic Accessories	Model Numbers	Part Number	Qty/Unit
M5 Adjustable Flow Control	RDH-1M, -2M, -3M	VLVF-008	1-2
G 1/4" Adjustable Flow Control	RDH-4M, -5M, -6M, -7M	VLVF-005	1-2
G 1/8" Adjustable Flow Control	RDH-8M	VLVF-010	1-2

*Sensor and cable sold separately.

Specifications	Units	1M	1M-L	2M	2M-L	3M	3M-L	4M	4M-L
Total Rated Grip Force **F** @ 100 psi [7 bar] w/o Spring Assist	N [lbs]	555 [125]	361 [81]	754 [170]	494 [111]	1317 [296]	854 [192]	2177 [490]	1414 [318]
Total Rated Grip Force **F** @ 100 psi [7 bar] with Spring Assist	N [lbs]	693 [156]	452 [102]	1006 [226]	661 [149]	1683 [379]	1094 [246]	2789 [628]	1814 [408]
Total Stroke	mm [in]	4 [0.16]	8 [0.32]	6 [0.24]	12 [0.47]	8 [0.31]	16 [0.63]	10 [0.39]	20 [0.79]
Weight	kg [lbs]	0.19 [0.4]	0.21 [0.5]	0.39 [0.86]	0.42 [0.93]	0.82 [1.81]	0.88 [1.94]	1.43 [3.15]	1.51 [3.33]
Pressure Range w/o Spring	bar [psi]	2-7 [30-100]							
Pressure Range with Spring	bar [psi]	3.5-7 [50-100]							
Max. Vacuum for Scavenge Port	mm Hg [in Hg]	200 [8]							
Max. Pressure for Purge Port	bar [psi]	2.1 [30]							
Ingress Protection Class (IP)		IP55							
Displacement	cm^3 [in^3]	5 [0.31]		10.3 [0.63]		23.4 [1.43]		47.5 [2.90]	
Temperature Range (Buna-N seals)	°C [°F]	-35°~80° [-30°~180°]							
Temperature Range (Viton® seals)	°C [°F]	-30°~150° [-20°~300°]							
Actuation (open/close)	sec.	0.06		0.07		0.08			
Accuracy	mm [in]	±0.04 [±0.002]						±0.06 [±0.0024]	
Repeatability	mm [in]	±0.02 [±0.001]						±0.03 [±0.0012]	
Valve to Actuate Single Acting		3-way, 2-position							
Valve to Actuate Double Acting		4-way, 2-position							

Specifications (cont.)	Units	5M	5M-L	6M	6M-L	7M	7M-L	8M	8M-L
Total Rated Grip Force **F** @ 100 psi [7 bar] w/o Spring Assist	N [lbs]	3593 [808]	2333 [525]	6250 [1406]	4062 [914]	9901 [2228]	6404 [1441]	21958 [4941]	14178 [3190]
Total Rated Grip Force **F** @ 100 psi [7 bar] with Spring Assist	N [lbs]	4609 [1037]	2999 [675]	8640 [1944]	5623 [1265]	12542 [2822]	8135 [1830]	28002 [6300]	18115 [4076]
Total Stroke	mm [in]	13 [0.51]	26 [1.02]	16 [0.63]	32 [1.26]	25 [0.98]	50 [1.97]	35 [1.38]	70 [2.76]
Weight	kg [lbs]	2.75 [6.06]	2.98 [6.57]	5.77 [12.72]		11.25 [24.8]		32.3 [71.1]	
Pressure Range w/o Spring	bar [psi]	2-7 [30-100]							
Pressure Range with Spring	bar [psi]	4-7 [60-100]		4.5-7 [65-100]		4-7 [60-100]		3.5-7 [50-100]	
Max. Vacuum for Scavenge Port	mm Hg [in Hg]	20 [8]							
Max. Pressure for Purge Port	bar [psi]	2.1 [30]							
Ingress Protection Class (IP)		IP55							
Displacement	cm^3 [in^3]	102 [6.22]		216 [13.18]		540 [32.95]		1689 [103.1]	
Temperature Range (Buna-N seals)	°C [°F]	-35°~80° [-30°~180°]							
Temperature Range (Viton® seals)	°C [°F]	-30°~150° [-20°~300°]							
Actuation (open/close)	sec.	0.14		0.20		0.55		1.3	
Accuracy	mm [in]	±0.06 [±0.0024]		±0.08 [±0.0031]		±0.1 [±0.0039]			
Repeatability	mm [in]	±0.03 [±0.0012]		±0.04 [±0.0016]		±0.05 [±0.002]			
Valve to Actuate Single Acting		3-way, 2-position							
Valve to Actuate Double Acting		4-way, 2-position							

RDH-1M, -1M-L

2-Jaw General Industrial Grippers | Dimensions and Technical Specifications

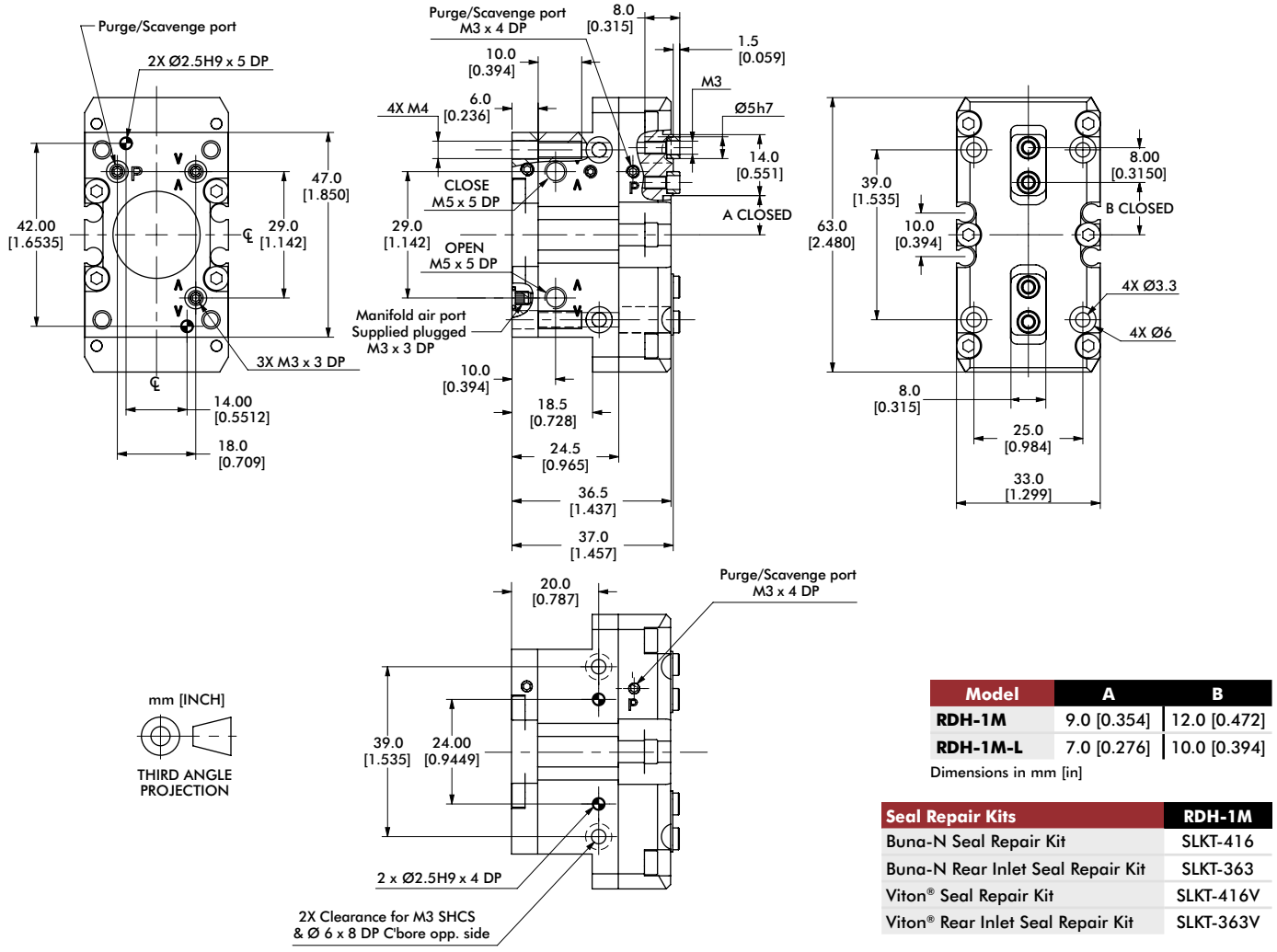

Model	A	B
RDH-1M	9.0 [0.354]	12.0 [0.472]
RDH-1M-L	7.0 [0.276]	10.0 [0.394]

Dimensions in mm [in]

Seal Repair Kits	RDH-1M
Buna-N Seal Repair Kit	SLKT-416
Buna-N Rear Inlet Seal Repair Kit	SLKT-363
Viton® Seal Repair Kit	SLKT-416V
Viton® Rear Inlet Seal Repair Kit	SLKT-363V

Loading Information

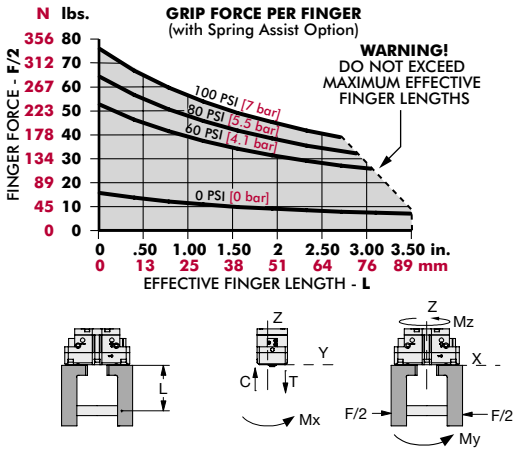

RDH-1M	Static	Dynamic
Maximum Tensile **T**	594 N [134 lbs]	74 N [17 lbs]
Maximum Compressive **C**	779 N [175 lbs]	74 N [17 lbs]
Maximum Moment M_x	18 Nm [159 in-lbs]	2 Nm [18 in-lbs]
Maximum Moment M_y	23 Nm [204 in-lbs]	2 Nm [18 in-lbs]
Maximum Moment M_z	14 Nm [124 in-lbs]	2 Nm [18 in-lbs]

†Capacities are per set of jaws and are not simultaneous

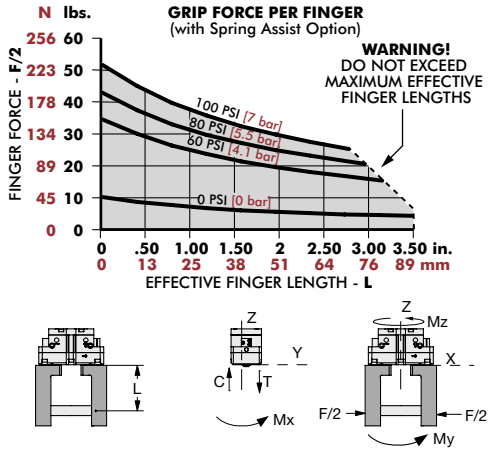

RDH-1M-L	Static	Dynamic
Maximum Tensile **T**	540 N [121 lbs]	48 N [11 lbs]
Maximum Compressive **C**	708 N [159 lbs]	48 N [11 lbs]
Maximum Moment M_x	16 Nm [142 in-lbs]	1 Nm [9 in-lbs]
Maximum Moment M_y	19 Nm [168 in-lbs]	1 Nm [9 in-lbs]
Maximum Moment M_z	12 Nm [106 in-lbs]	1 Nm [9 in-lbs]

†Capacities are per set of jaws and are not simultaneous

2-Jaw General Industrial Grippers | Dimensions and Technical Specifications

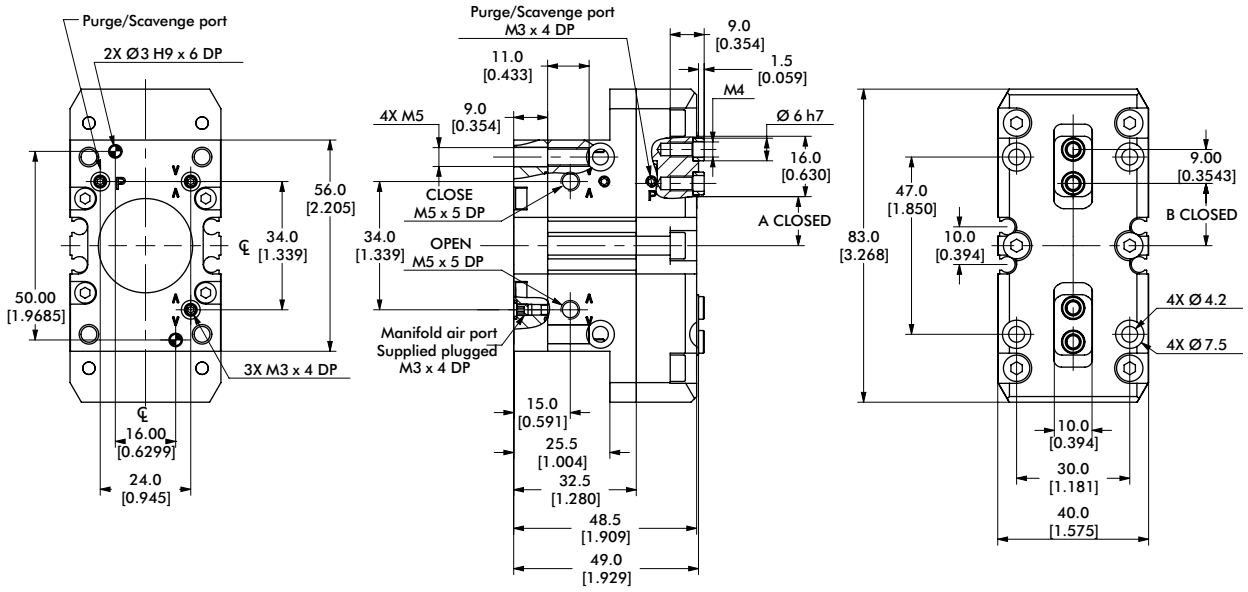

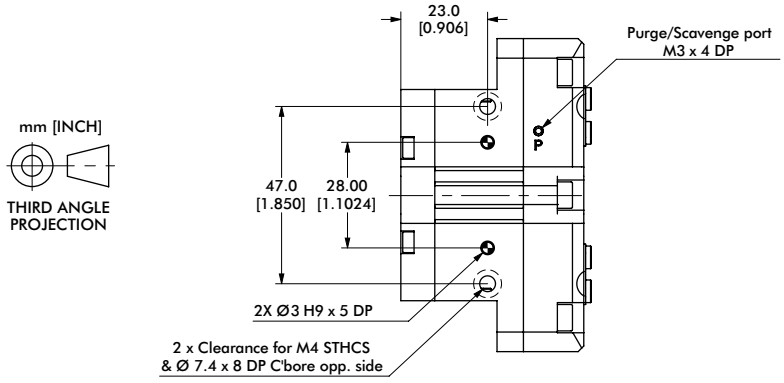

mm [INCH]

THIRD ANGLE PROJECTION

Model	A	B
RDH-2M	13.0 [0.512]	16.5 [0.650]
RDH-2M-L	10.0 [0.394]	13.5 [0.531]

Dimensions in mm [in]

Seal Repair Kits	RDH-2M
Buna-N Seal Repair Kit	SLKT-417
Buna-N Rear Inlet Seal Repair Kit	SLKT-363
Viton® Seal Repair Kit	SLKT-417V
Viton® Rear Inlet Seal Repair Kit	SLKT-363V

Loading Information

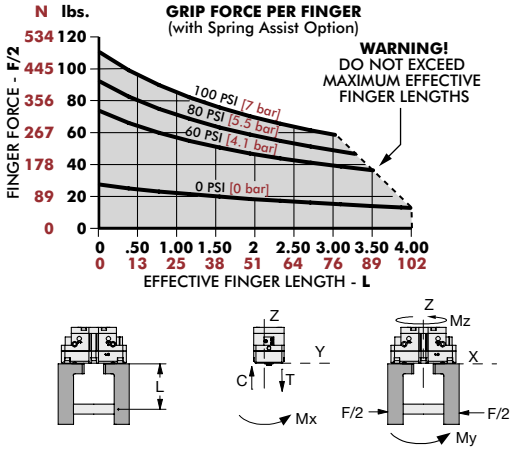

RDH-2M	Static	Dynamic
Maximum Tensile **T**	849 N [191 lbs]	81 N [18 lbs]
Maximum Compressive **C**	1103 N [248 lbs]	81 N [18 lbs]
Maximum Moment M_X	36 Nm [319 in-lbs]	3 Nm [27 in-lbs]
Maximum Moment M_Y	51 Nm [451 in-lbs]	4 Nm [35 in-lbs]
Maximum Moment M_Z	32 Nm [283 in-lbs]	4 Nm [35 in-lbs]

†Capacities are per set of jaws and are not simultaneous

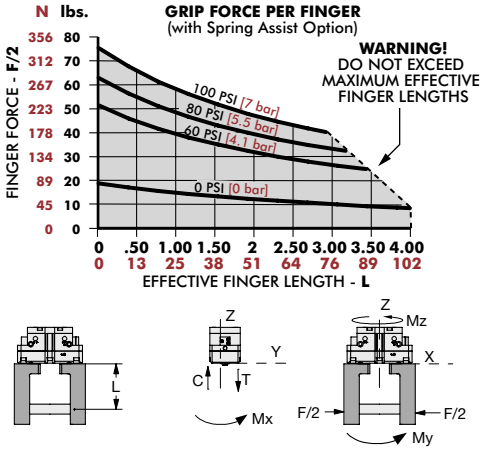

RDH-2M-L	Static	Dynamic
Maximum Tensile **T**	764 N [172 lbs]	53 N [12 lbs]
Maximum Compressive **C**	993 N [223 lbs]	53 N [12 lbs]
Maximum Moment M_X	32 Nm [283 in-lbs]	2 Nm [18 in-lbs]
Maximum Moment M_Y	41 Nm [363 in-lbs]	2 Nm [18 in-lbs]
Maximum Moment M_Z	26 Nm [230 in-lbs]	2 Nm [18 in-lbs]

†Capacities are per set of jaws and are not simultaneous

RDH-3M, -3M-L

2-Jaw General Industrial Grippers | Dimensions and Technical Specifications

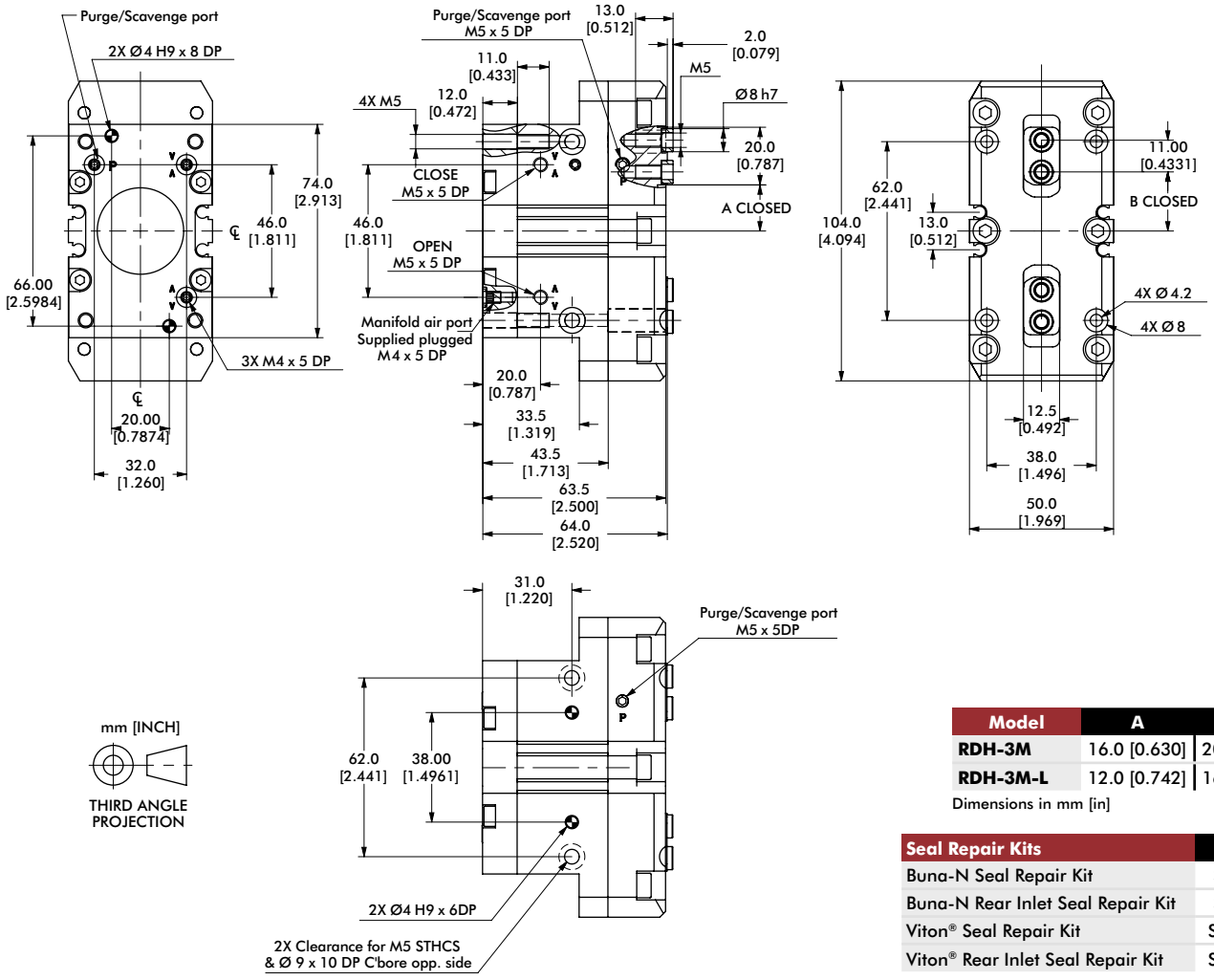

Model	A	B
RDH-3M	16.0 [0.630]	20.5 [0.807]
RDH-3M-L	12.0 [0.742]	16.5 [0.650]

Dimensions in mm [in]

Seal Repair Kits	RDH-3M
Buna-N Seal Repair Kit	SLKT-418
Buna-N Rear Inlet Seal Repair Kit	SLKT-364
Viton® Seal Repair Kit	SLKT-418V
Viton® Rear Inlet Seal Repair Kit	SLKT-364V

Loading Information

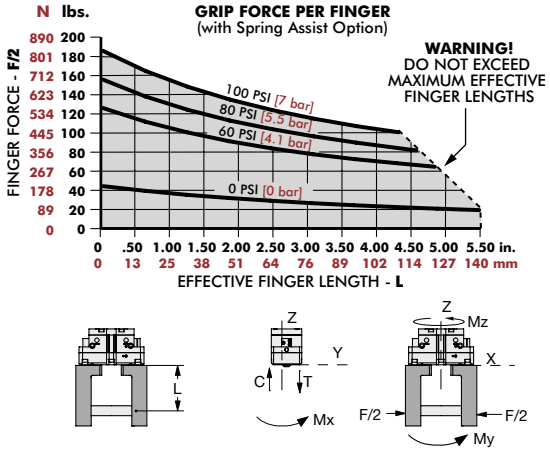

RDH-3M	Static	Dynamic
Maximum Tensile **T**	1284 N [289 lbs]	196 N [44 lbs]
Maximum Compressive **C**	1665 N [374 lbs]	196 N [44 lbs]
Maximum Moment M_x	58 Nm [513 in-lbs]	7 Nm [62 in-lbs]
Maximum Moment **My**	83 Nm [735 in-lbs]	11 Nm [97 in-lbs]
Maximum Moment M_z	54 Nm [478 in-lbs]	11 Nm [97 in-lbs]

†Capacities are per set of jaws and are not simultaneous

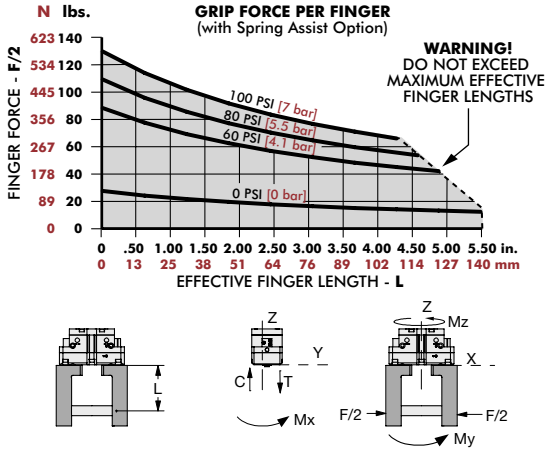

RDH-3M-L	Static	Dynamic
Maximum Tensile **T**	1146 N [258 lbs]	127 N [29 lbs]
Maximum Compressive **C**	1485 N [334 lbs]	127 N [29 lbs]
Maximum Moment M_x	52 Nm [460 in-lbs]	5 Nm [44 in-lbs]
Maximum Moment **My**	66 Nm [584 in-lbs]	6 Nm [53 in-lbs]
Maximum Moment M_z	43 Nm [381 in-lbs]	[53 in-lbs] 6 Nm

†Capacities are per set of jaws and are not simultaneous

Dimensions and technical information are subject to change without notice

2-Jaw General Industrial Grippers | Dimensions and Technical Specifications

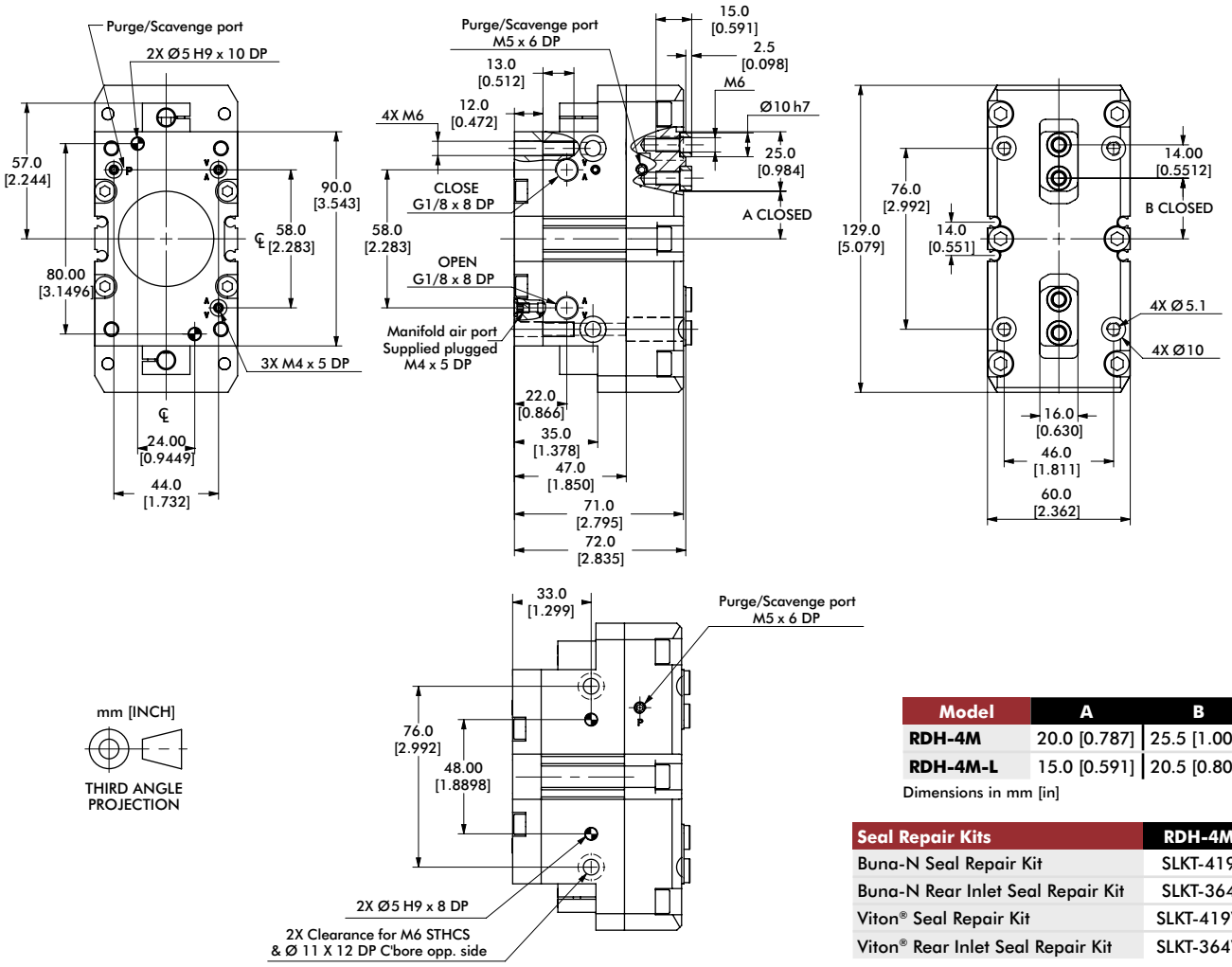

Model	A	B
RDH-4M	20.0 [0.787]	25.5 [1.004]
RDH-4M-L	15.0 [0.591]	20.5 [0.807]

Dimensions in mm [in]

Seal Repair Kits	RDH-4M
Buna-N Seal Repair Kit	SLKT-419
Buna-N Rear Inlet Seal Repair Kit	SLKT-364
Viton® Seal Repair Kit	SLKT-419V
Viton® Rear Inlet Seal Repair Kit	SLKT-364V

Loading Information

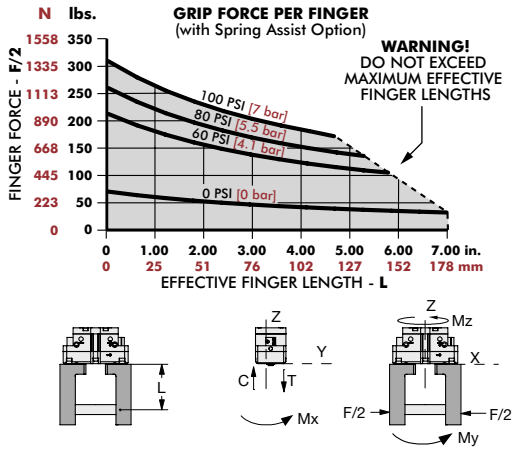

RDH-4M	Static	Dynamic
Maximum Tensile **T**	1564 N [352 lbs]	259 N [58 lbs]
Maximum Compressive **C**	2070 N [465 lbs]	259 N [58 lbs]
Maximum Moment M_X	76 Nm [673 in-lbs]	10 Nm [89 in-lbs]
Maximum Moment M_Y	106 Nm [938 in-lbs]	14 Nm [124 in-lbs]
Maximum Moment M_Z	70 Nm [620 in-lbs]	14 Nm [124 in-lbs]

†Capacities are per set of jaws and are not simultaneous

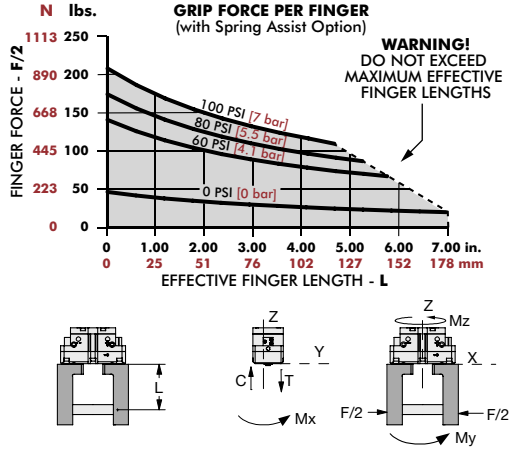

RDH-4M-L	Static	Dynamic
Maximum Tensile **T**	1394 N [313 lbs]	168 N [38 lbs]
Maximum Compressive **C**	1845 N [415 lbs]	168 N [38 lbs]
Maximum Moment M_X	68 Nm [602 in-lbs]	6 Nm [53 in-lbs]
Maximum Moment M_Y	84 Nm [743 in-lbs]	8 Nm [71 in-lbs]
Maximum Moment M_Z	56 Nm [496 in-lbs]	8 Nm [71 in-lbs]

†Capacities are per set of jaws and are not simultaneous

RDH-5M, -5M-L

2-Jaw General Industrial Grippers | Dimensions and Technical Specifications

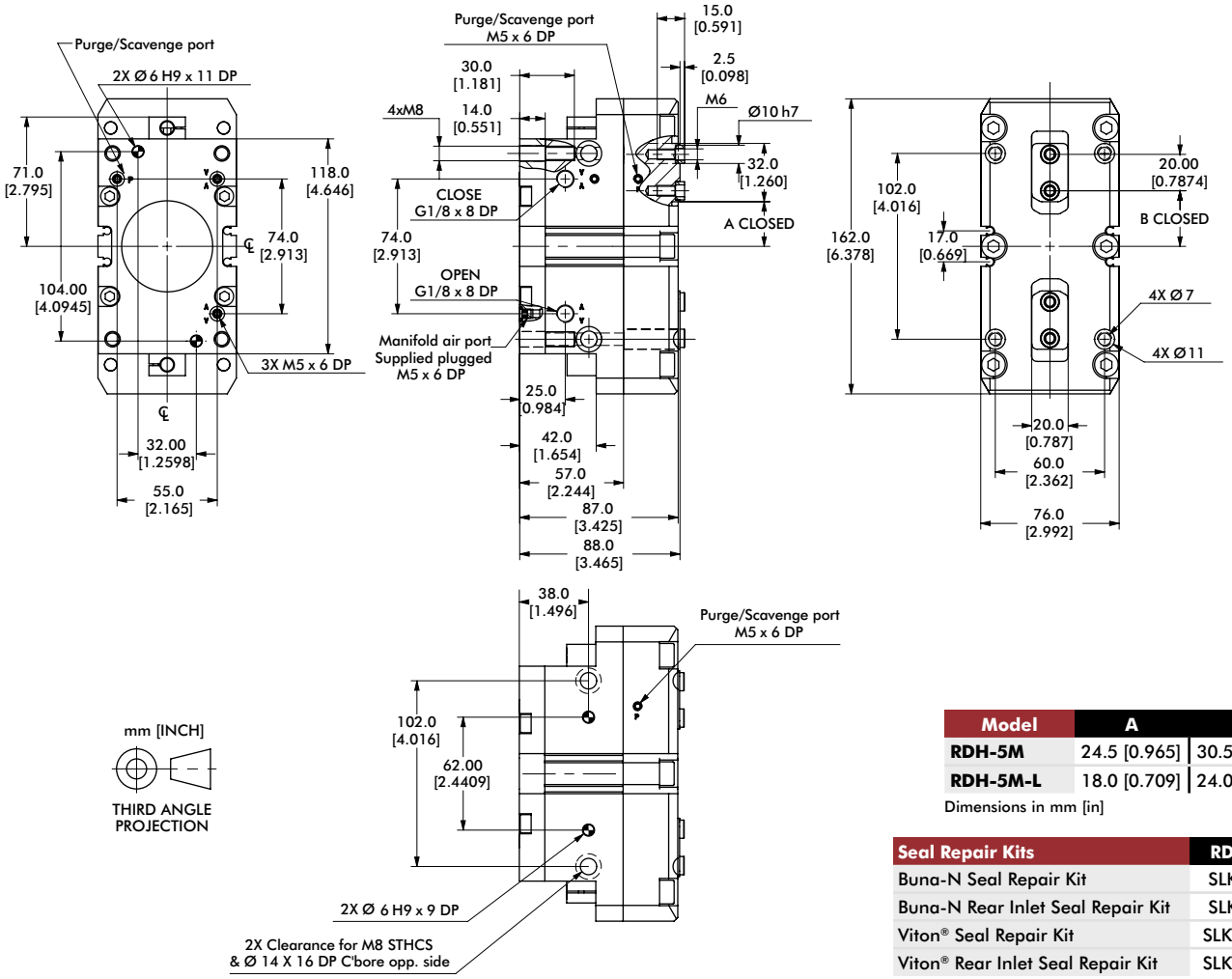

Model	A	B
RDH-5M	24.5 [0.965]	30.5 [1.201]
RDH-5M-L	18.0 [0.709]	24.0 [0.945]

Dimensions in mm [in]

Seal Repair Kits	RDH-5M
Buna-N Seal Repair Kit	SLKT-420
Buna-N Rear Inlet Seal Repair Kit	SLKT-365
Viton® Seal Repair Kit	SLKT-420V
Viton® Rear Inlet Seal Repair Kit	SLKT-365V

Loading Information

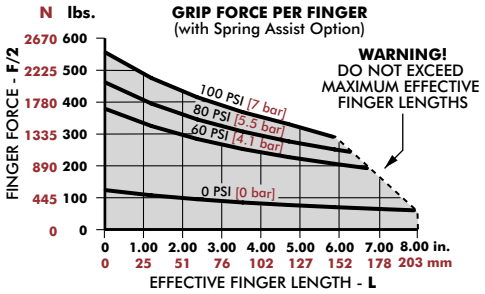

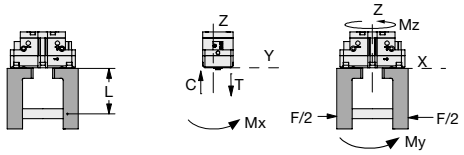

RDH-5M	Static	Dynamic
Maximum Tensile **T**	2192 N [493 lbs]	428 N [96 lbs]
Maximum Compressive **C**	2923 N [657 lbs]	428 N [96 lbs]
Maximum Moment **Mx**	105 Nm [929 in-lbs]	16 Nm [142 in-lbs]
Maximum Moment **My**	148 Nm [1310 in-lbs]	22 Nm [195 in-lbs]
Maximum Moment **Mz**	97 Nm [859 in-lbs]	22 Nm [195 in-lbs]

†Capacities are per set of jaws and are not simultaneous

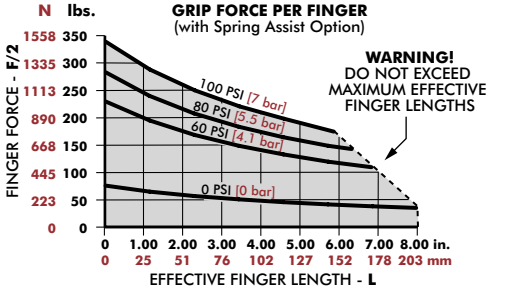

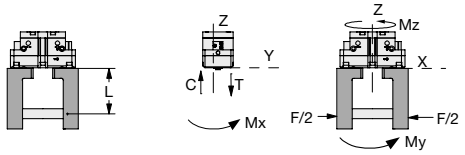

RDH-5M-L	Static	Dynamic
Maximum Tensile **T**	1966 N [442 lbs]	278 N [62 lbs]
Maximum Compressive **C**	2621 N [589 lbs]	278 N [62 lbs]
Maximum Moment **Mx**	94 Nm [832 in-lbs]	10 Nm [89 in-lbs]
Maximum Moment **My**	119 Nm [1053 in-lbs]	13 Nm [115 in-lbs]
Maximum Moment **Mz**	78 Nm [690 in-lbs]	13 Nm [115 in-lbs]

†Capacities are per set of jaws and are not simultaneous

2-Jaw General Industrial Grippers | Dimensions and Technical Specifications

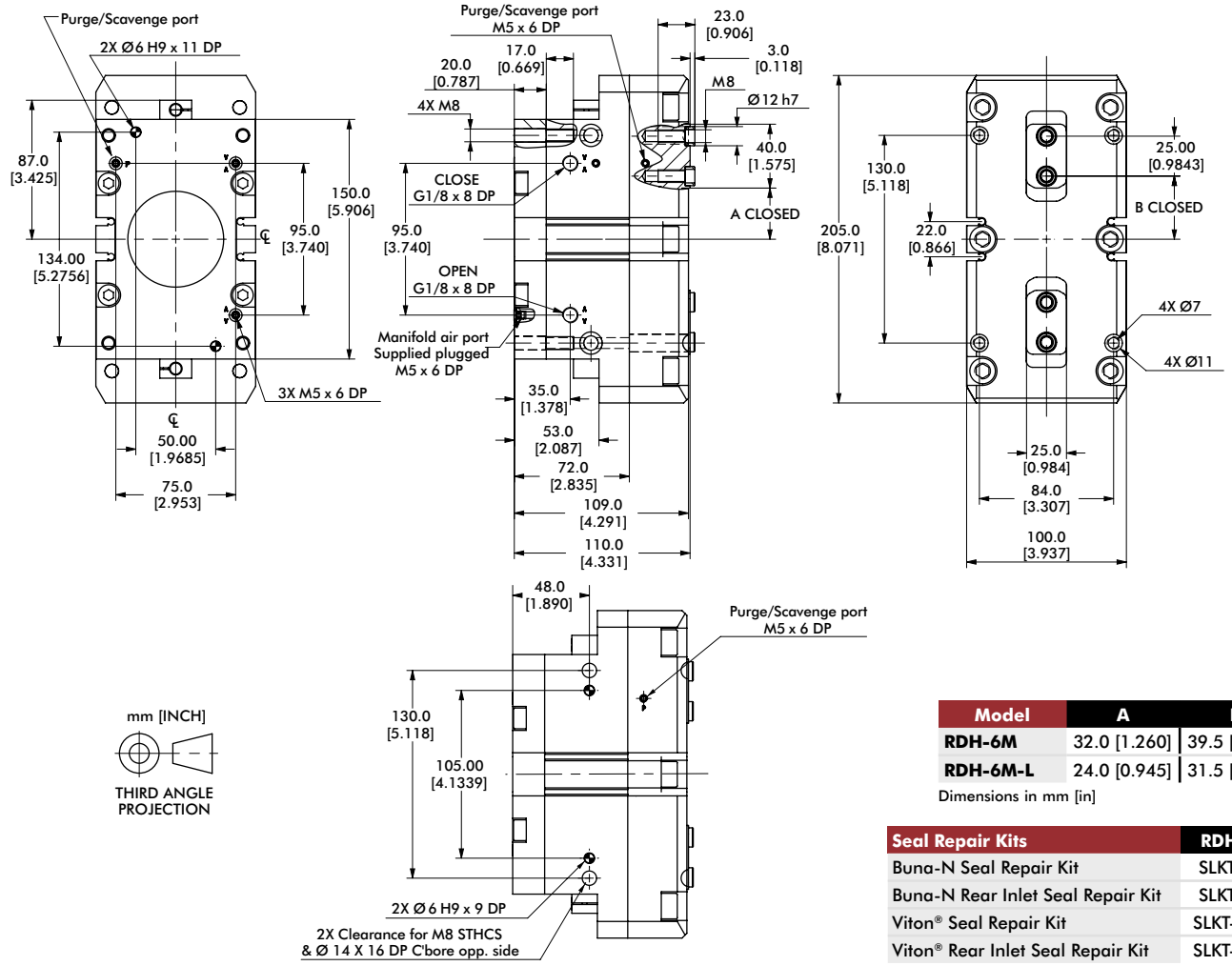

Model	A	B
RDH-6M	32.0 [1.260]	39.5 [1.555]
RDH-6M-L	24.0 [0.945]	31.5 [1.240]

Dimensions in mm [in]

Seal Repair Kits	RDH-6M
Buna-N Seal Repair Kit	SLKT-421
Buna-N Rear Inlet Seal Repair Kit	SLKT-365
Viton® Seal Repair Kit	SLKT-421V
Viton® Rear Inlet Seal Repair Kit	SLKT-365V

Loading Information

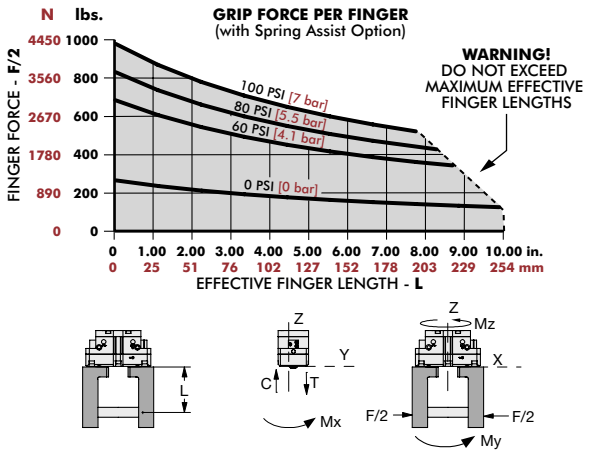

RDH-6M	Static	Dynamic
Maximum Tensile **T**	3463 N [779 lbs]	827 N [186 lbs]
Maximum Compressive **C**	4649 N [1045 lbs]	827 N [186 lbs]
Maximum Moment M_X	136 Nm [1204 in-lbs]	28 Nm [248 in-lbs]
Maximum Moment M_Y	197 Nm [1744 in-lbs]	41 Nm [363 in-lbs]
Maximum Moment M_Z	130 Nm [1151 in-lbs]	41 Nm [363 in-lbs]

†Capacities are per set of jaws and are not simultaneous

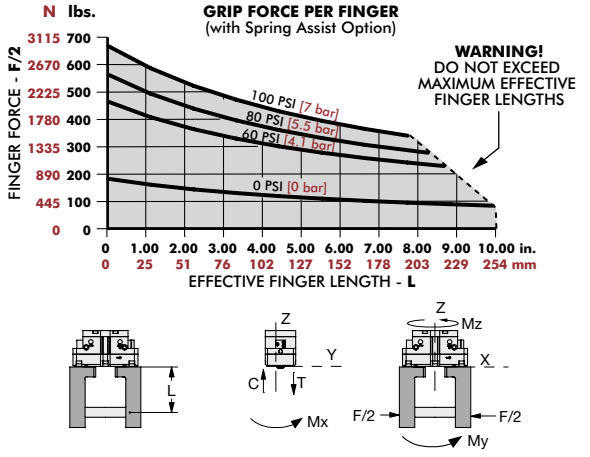

RDH-6M-L	Static	Dynamic
Maximum Tensile **T**	3089 N [694 lbs]	537 N [121 lbs]
Maximum Compressive **C**	4146 N [932 lbs]	537 N [121 lbs]
Maximum Moment M_X	121 Nm [1071 in-lbs]	18 Nm [159 in-lbs]
Maximum Moment M_Y	157 Nm [1390 in-lbs]	24 Nm [212 in-lbs]
Maximum Moment M_Z	103 Nm [912 in-lbs]	24 Nm [212 in-lbs]

†Capacities are per set of jaws and are not simultaneous

RDH-7M, -7M-L

2-Jaw General Industrial Grippers | Dimensions and Technical Specifications

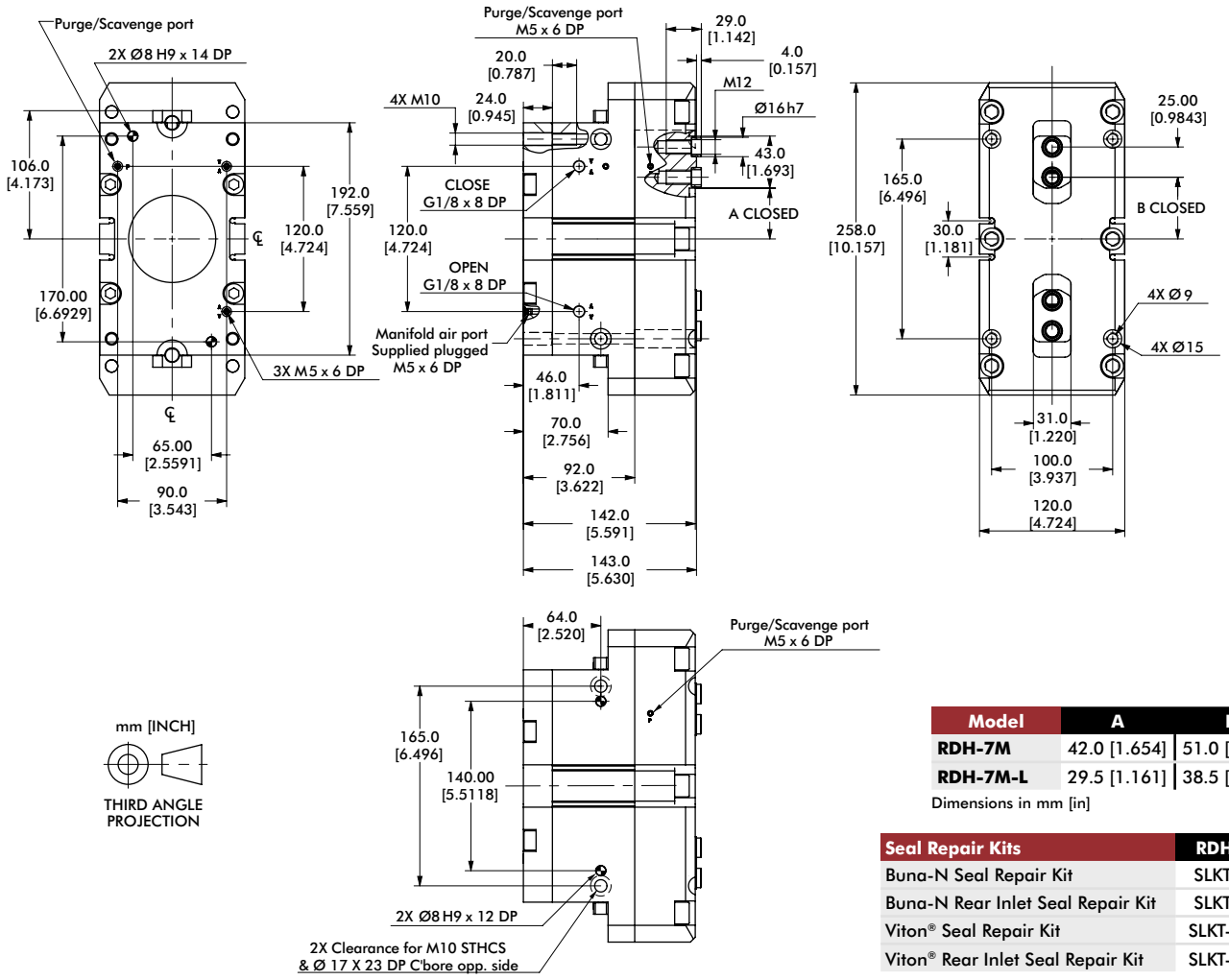

Model	A	B
RDH-7M	42.0 [1.654]	51.0 [2.008]
RDH-7M-L	29.5 [1.161]	38.5 [1.516]

Dimensions in mm [in]

Seal Repair Kits	RDH-7M
Buna-N Seal Repair Kit	SLKT-422
Buna-N Rear Inlet Seal Repair Kit	SLKT-365
Viton® Seal Repair Kit	SLKT-422V
Viton® Rear Inlet Seal Repair Kit	SLKT-365V

Loading Information

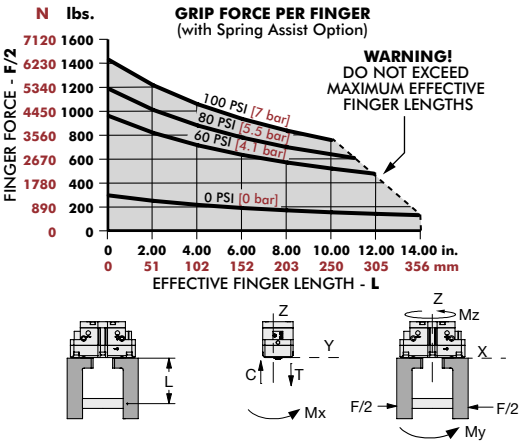

RDH-7M	Static	Dynamic
Maximum Tensile **T**	4505 N [1013 lbs]	1048 N [236 lbs]
Maximum Compressive **C**	5938 N [1335 lbs]	1048 N [236 lbs]
Maximum Moment M_x	167 Nm [1478 in-lbs]	36 Nm [319 in-lbs]
Maximum Moment M_y	238 Nm [2106 in-lbs]	51 Nm [451 in-lbs]
Maximum Moment M_z	161 Nm [1425 in-lbs]	51 Nm [451 in-lbs]

†Capacities are per set of jaws and are not simultaneous

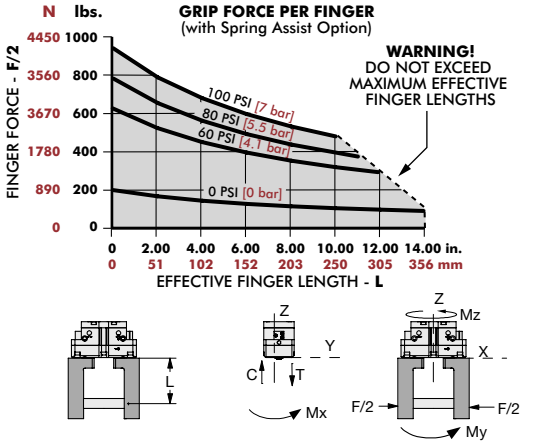

RDH-7M-L	Static	Dynamic
Maximum Tensile **T**	3911 N [879 lbs]	678 N [152 lbs]
Maximum Compressive **C**	5155 N [1159 lbs]	678 N [152 lbs]
Maximum Moment M_x	145 Nm [1283 in-lbs]	23 Nm [204 in-lbs]
Maximum Moment M_y	179 Nm [1584 in-lbs]	29 Nm [257 in-lbs]
Maximum Moment M_z	122 Nm [1080 in-lbs]	29 Nm [257 in-lbs]

†Capacities are per set of jaws and are not simultaneous

Dimensions and technical information are subject to change without notice

2-Jaw General Industrial Grippers | Dimensions and Technical Specifications

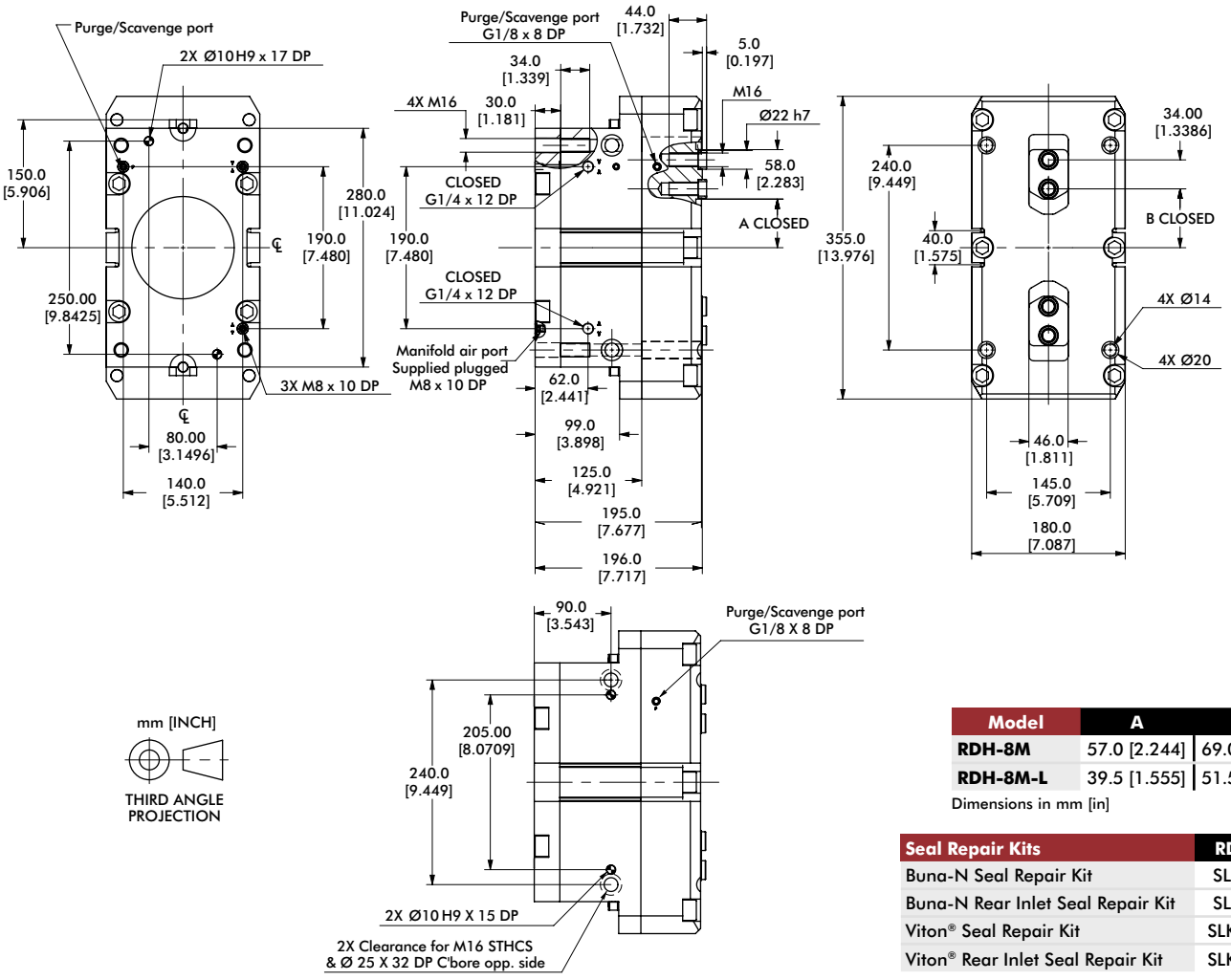

Model	A	B
RDH-8M	57.0 [2.244]	69.0 [2.717]
RDH-8M-L	39.5 [1.555]	51.5 [2.028]

Dimensions in mm [in]

Seal Repair Kits	RDH-8M
Buna-N Seal Repair Kit	SLKT-423
Buna-N Rear Inlet Seal Repair Kit	SLKT-366
Viton® Seal Repair Kit	SLKT-423V
Viton® Rear Inlet Seal Repair Kit	SLKT-366V

Loading Information

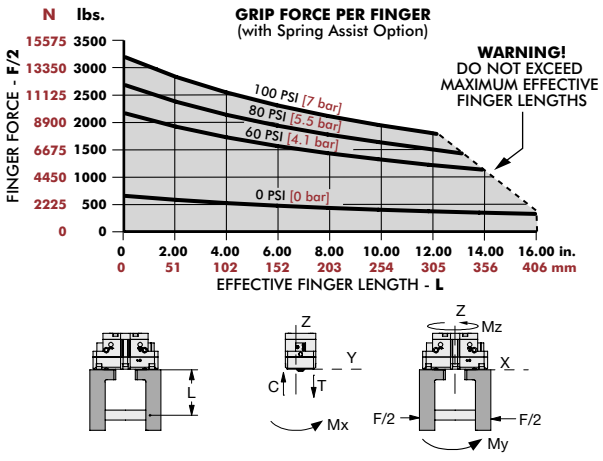

RDH-8M	Static	Dynamic
Maximum Tensile **T**	6863 N [1543 lbs]	1743 N [392 lbs]
Maximum Compressive **C**	8921 N [2006 lbs]	1743 N [392 lbs]
Maximum Moment $\mathbf{M_X}$	379 Nm [3354 in-lbs]	84 Nm [743 in-lbs]
Maximum Moment $\mathbf{M_Y}$	481 Nm [4257 in-lbs]	107 Nm [947 in-lbs]
Maximum Moment $\mathbf{M_Z}$	301 Nm [2664 in-lbs]	107 Nm [947 in-lbs]

†Capacities are per set of jaws and are not simultaneous

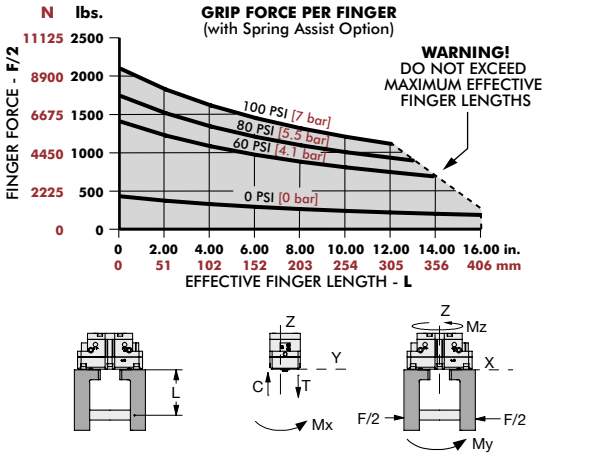

RDH-8M-L	Static	Dynamic
Maximum Tensile **T**	5906 N [1328 lbs]	1125 N [253 lbs]
Maximum Compressive **C**	7678 N [1726 lbs]	1125 N [253 lbs]
Maximum Moment $\mathbf{M_X}$	326 Nm [2885 in-lbs]	54 Nm [478 in-lbs]
Maximum Moment $\mathbf{M_Y}$	357 Nm [3160 in-lbs]	59 Nm [522 in-lbs]
Maximum Moment $\mathbf{M_Z}$	223 Nm [1974 in-lbs]	59 Nm [522 in-lbs]

†Capacities are per set of jaws and are not simultaneous

REP2 SERIES

2-Jaw General Industrial Grippers | Product Features, How to Order

Features:

- Compact cam lever design general purpose gripper
- Pneumatic and Hydraulic operation options
- Spring assist option for part retention in case of air pressure loss
- Standard and extended stroke option available
- Shielded design for harsh environments
- Magneto-resistive and Inductive sensing

Applications:

- Assembly manufacturing cells
- Packaging applications
- General purpose gripping



How To Order

Base Model	Size	Spring	Description	Seals	Description
REP	62	"Blank"	No Spring	"Blank"	Buna-N
	82	RE	External Gripping	V	Viton® High Temperature
	112	RI	Internal Gripping		

Power	Description
P	Pneumatic

Stroke	Description
"Blank"	Standard
C	Extended

Accessories

Sensor Accessories	Model Numbers	Part Number	Qty/Unit
NPN Inductive Sensor with M8 Quick Disconnect*	All Models	OISN-011	1-4
PNP Inductive Sensor with M8 Quick Disconnect*	All Models	OISP-011	1-4
NPN Magneto Resistive Sensor with Quick Disconnect*†	All Models	OHSN-006	1-2
PNP Magneto Resistive Sensor with Quick Disconnect*†	All Models	OHSP-006	1-2
NPN Magneto Resistive Sensor (Short Barrel) with Qk Disconnect*†	All Models	OHSN-017	1-2
PNP Magneto Resistive Sensor (Short Barrel) with Qk Disconnect*†	All Models	OHSP-017	1-2
M8 Quick Disconnect 2 Meter Cable Length*	All Models	CABL-010	1-4
M8 Quick Disconnect 2 Meter Cable Length*	All Models	CABL-013	1-4
Inductive Sensor Mounting Kit (Mounts 2 Sensors)	62	OSMK-102	1-2
Inductive Sensor Mounting Kit (Mounts 2 Sensors)	82	OSMK-103	1-2
Inductive Sensor Mounting Kit (Mounts 2 Sensors)	112	OSMK-104	1-2

*Sensor and cable sold separately. †The gripper comes with adjustable slots for two magnetic sensors (to control jaw position). Must be used with the **-RE** or **-RI** option.

Specifications	Units	62	62-C	82	82-C	112	112-C
Total Rated Grip Force **F** @ 100 psi [7 bar]*	N [lbs]	771 [173]	480 [108]	2140 [481]	1382 [311]	3351 [753]	2233 [502]
Total Stroke	mm [in]	10 [0.394]	16 [0.630]	13 [0.512]	20 [0.787]	20 [0.787]	30 [1.181]
Weight	kg [lbs]	0.55 [1.2]		0.9 [2.0]		2.45 [5.4]	
Pressure Range w/o Spring	bar [psi]	2-7 [30-100]					
Pressure Range with Spring	bar [psi]	3-7 [45-100]		4-7 [60-100]			
Ingress Protection Class (IP)		IP55					
Displacement	cm^3 [in^3]	12 [0.72]		35 [2.13]		87 [5.31]	
Temperature Range (Buna-N seals)	°C [°F]	-35°~80° [-30°~180°]					
Temperature Range (Viton® seals)	°C [°F]	-30°~150° [-20°~300°]					
Actuation (open/close)	sec	0.10		0.18		0.35	
Accuracy	mm [in]	±0.05 [±0.002]					
Repeatability	mm [in]	±0.02 [±0.0008]					
Valve to Actuate Single Acting		3-way, 2-position					
Valve to Actuate Double Acting		4-way, 2-position					

* with springs

REP-62, -62-C

2-Jaw General Industrial Grippers | Dimensions and Technical Specifications

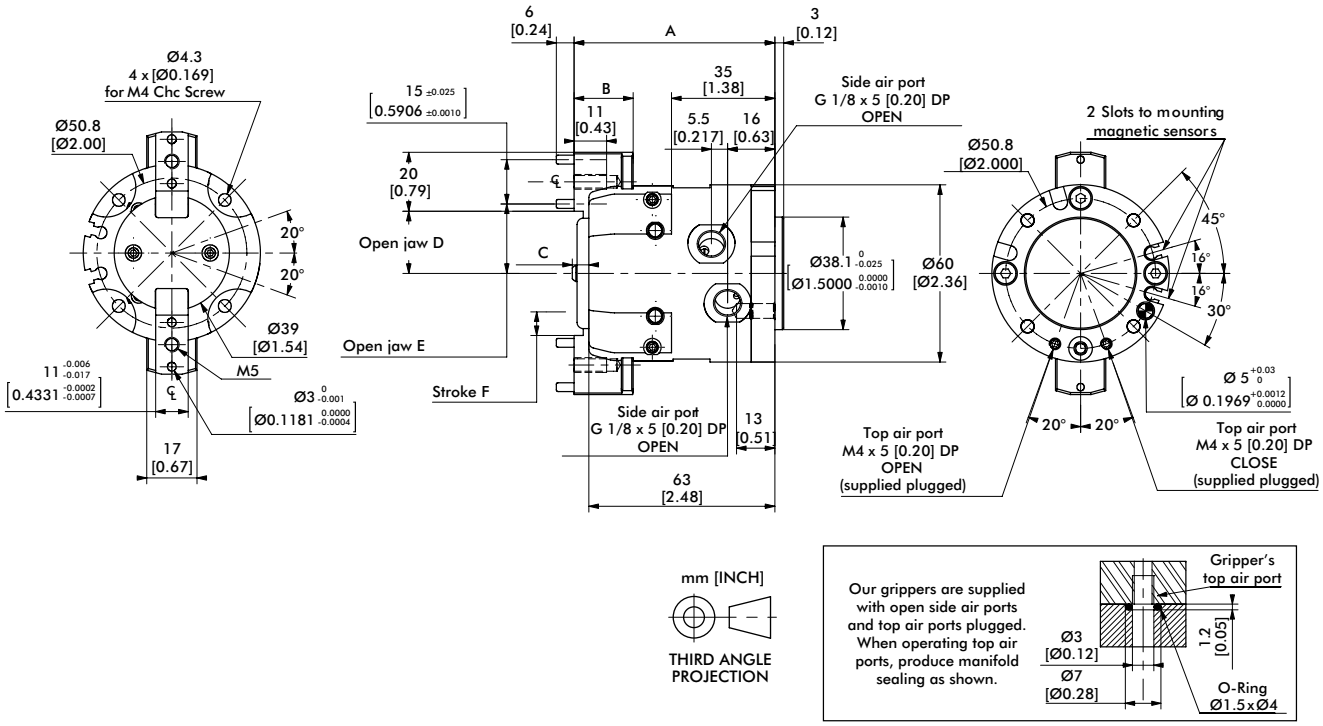

Model	A	B	C	D	E	F
REP-62	64 [2.52]	16 [0.63]	1.6 [0.063]	15 [0.59]	17.5 [0.689]	5 [0.20]
REP-62-C	68 [2.68]	20 [0.79]	5.6 [0.220]	21 [0.83]	23.5 [0.926]	8 [0.31]

Seal Repair Kits	REP-62
Buna-N Seal Repair Kit	SLKT-155
Viton® Seal Repair Kit	SLKT-155V

Loading Information

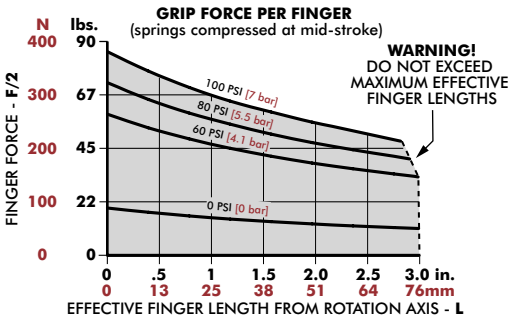

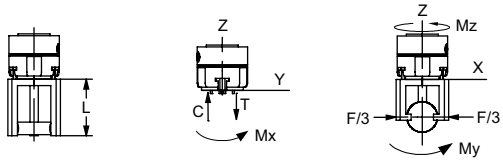

REP-62	Static
Maximum Tensile **T**	575 N [129 lbs]
Maximum Compressive **C**	760 N [171 lbs]
Maximum Moment M_x	13 Nm [115 in-lbs]
Maximum Moment M_y	23 Nm [204 in-lbs]
Maximum Moment M_z	36 Nm [319 in-lbs]

†Capacities are per set of jaws and are not simultaneous

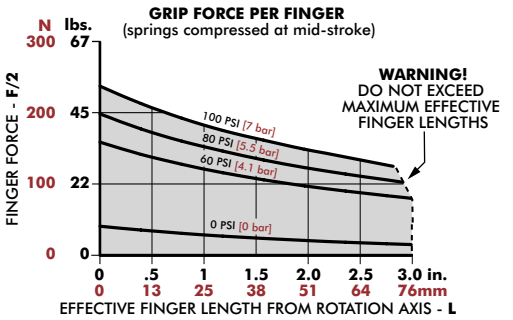

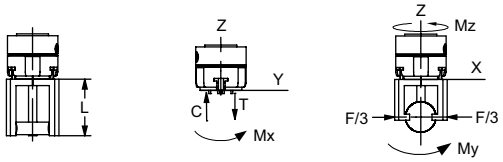

REP-62-C	Static
Maximum Tensile **T**	575 N [129 lbs]
Maximum Compressive **C**	760 N [171 lbs]
Maximum Moment M_x	13 Nm [115 in-lbs]
Maximum Moment M_y	23 Nm [204 in-lbs]
Maximum Moment M_z	36 Nm [319 in-lbs]

†Capacities are per set of jaws and are not simultaneous

Dimensions and technical information are subject to change without notice

REP-82, -82-C

2-Jaw General Industrial Grippers | Dimensions and Technical Specifications

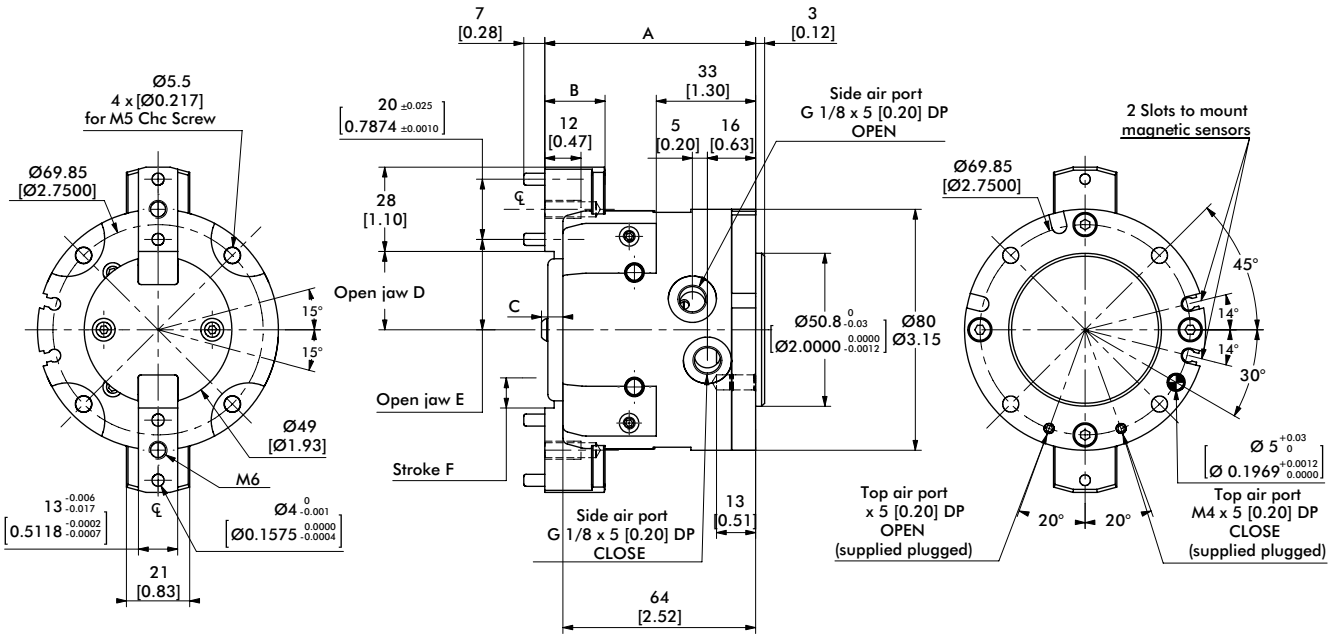

mm [INCH]

THIRD ANGLE PROJECTION

Our grippers are supplied with open side air ports and top air ports plugged. When operating top air ports, produce manifold sealing as shown.

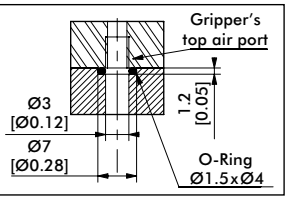

Model	A	B	C	D	E	F
REP-82	65 [2.56]	15 [0.59]	2.1 [0.083]	19 [0.75]	23 [0.91]	6.5 [0.26]
REP-82-C	70 [2.76]	20 [0.79]	7.1 [0.280]	26 [1.02]	30 [1.18]	10 [0.39]

Seal Repair Kits	REP-82
Buna-N Seal Repair Kit	SLKT-157
Viton® Seal Repair Kit	SLKT-157V

Loading Information

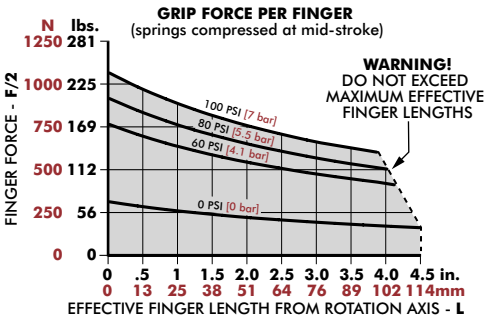

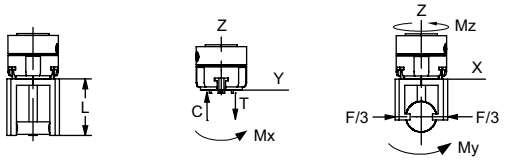

REP-82	Static
Maximum Tensile **T**	890 N [200 lbs]
Maximum Compressive **C**	1000 N [225 lbs]
Maximum Moment M_X	22 Nm [195 in-lbs]
Maximum Moment M_Y	45 Nm [398 in-lbs]
Maximum Moment M_Z	45 Nm [398 in-lbs]

†Capacities are per set of jaws and are not simultaneous

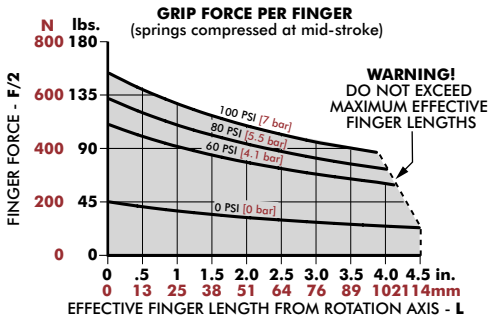

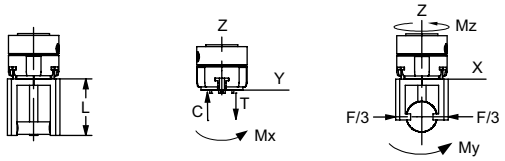

REP-82-C	Static
Maximum Tensile **T**	810 N [182 lbs]
Maximum Compressive **C**	910 N [205 lbs]
Maximum Moment M_X	20 Nm [177 in-lbs]
Maximum Moment M_Y	40 Nm [354 in-lbs]
Maximum Moment M_Z	42 Nm [372 in-lbs]

†Capacities are per set of jaws and are not simultaneous

REP-112, -112-C

2-Jaw General Industrial Grippers | Dimensions and Technical Specifications

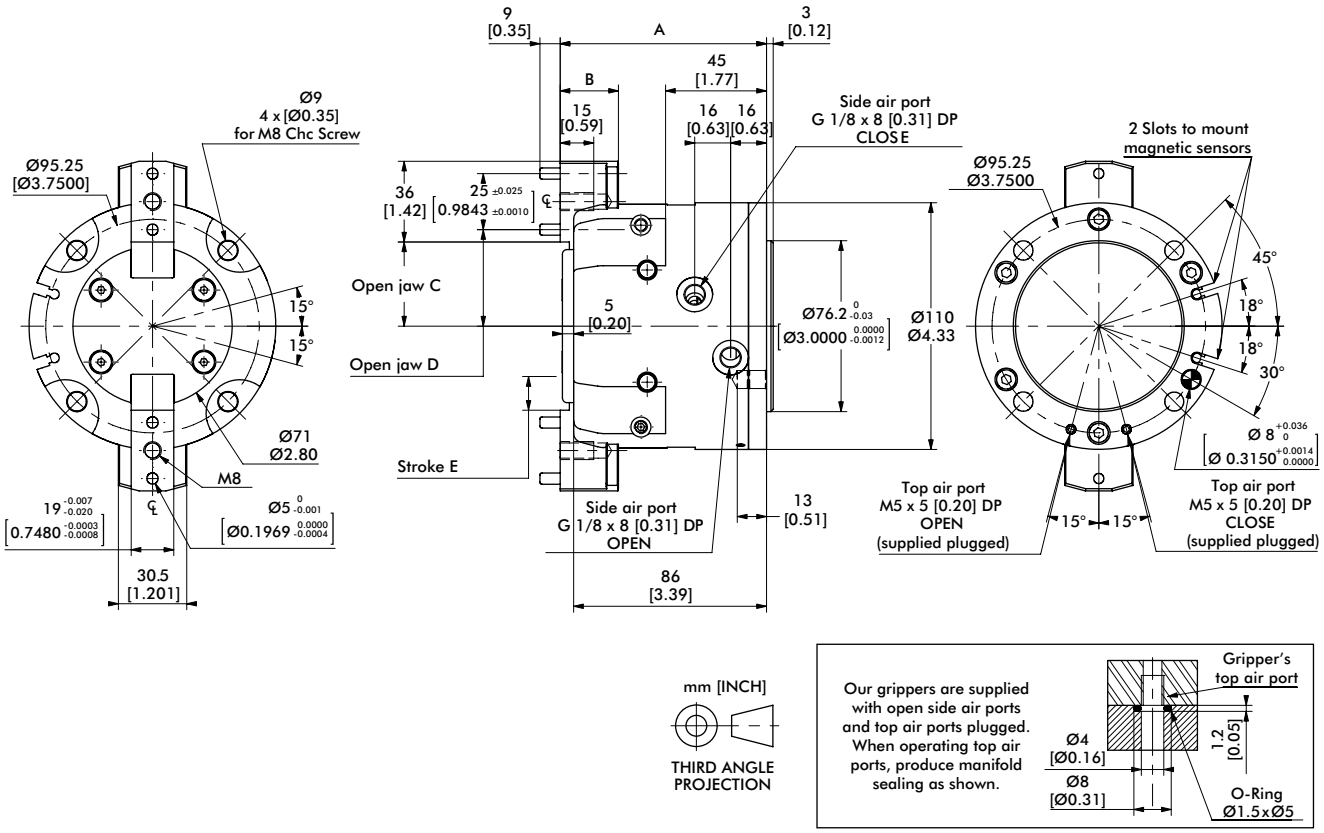

mm [INCH]

THIRD ANGLE PROJECTION

Our grippers are supplied with open side air ports and top air ports plugged. When operating top air ports, produce manifold sealing as shown.

Model	A	B	C	D	E
REP-112	87 [3.43]	21 [0.83]	27.5 [1.083]	33 [1.30]	10 [0.39]
REP-112-C	92 [3.62]	26 [1.02]	37.5 [1.476]	43 [1.69]	15 [0.59]

Seal Repair Kits	REP-112
Buna-N Seal Repair Kit	SLKT-155
Viton® Seal Repair Kit	SLKT-155V

Loading Information

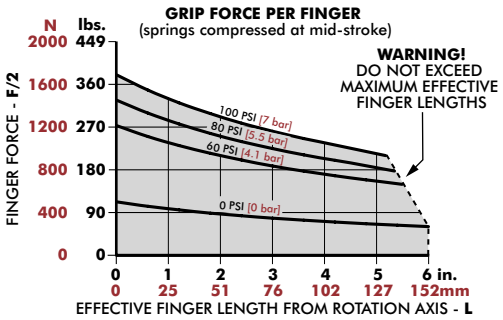

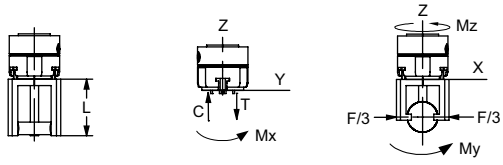

REP-112	Static
Maximum Tensile **T**	1320 N [297 lbs]
Maximum Compressive **C**	1430 N [321 lbs]
Maximum Moment M_x	44 Nm [389 in-lbs]
Maximum Moment M_y	75 Nm [664 in-lbs]
Maximum Moment M_z	70 Nm [620 in-lbs]

†Capacities are per set of jaws and are not simultaneous

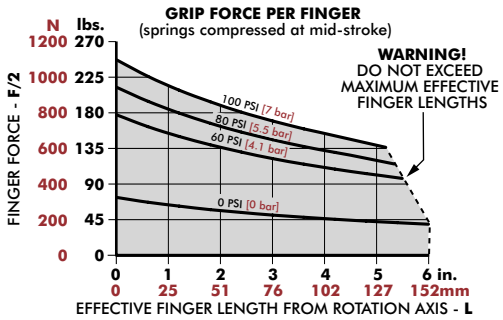

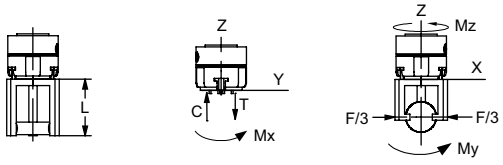

REP-112-C	Static
Maximum Tensile **T**	1320 N [297 lbs]
Maximum Compressive **C**	1430 N [321 lbs]
Maximum Moment M_x	38 Nm [336 in-lbs]
Maximum Moment M_y	75 Nm [664 in-lbs]
Maximum Moment M_z	70 Nm [620 in-lbs]

†Capacities are per set of jaws and are not simultaneous

Notes

RP5-10 SERIES

2-Jaw General Industrial Grippers | Product Features, How to Order

Features:

- Widely used robust miniature gripper
- Double wedge design for high impact applications
- Spring assist option for part retention in case of air pressure loss
- Create gripper arrays with close proximity mounting for multiple part pick and place
- Grip force range from 156N [35 lbs] to 178N [40 lbs]
- Stroke Range from 4.1mm [0.16 in] to 6.4mm [0.25 in]

Applications:

- Ideal for small part gripping solutions
- Used with small robots
- Packaging applications
- Multiple part transfers using banks of grippers



RP-10



RP-5, 5-FS



(USB key shown for scale)

How To Order

Base Model	Size	Spring Option	Description
RP	**5**	"Blank"	No Spring
	10	**FS**	Spring Assist Air Loss (RP-5 Only)

Unit Type	Description	Seals	Description
"Blank"	Imperial	"Blank"	Buna-N
M	Metric	**V**	Viton® High Temperature

Accessories

Sensor Accessories	Model Numbers	Part Number	Qty/Unit
Sensor Mounting Kit for Imperial & Metric Units (mounts 2 sensors)	RP-5	OSMK-001	1
Sensor Mounting Kit for Imperial & Metric Units (mounts 2 sensors)	RP-10	OSMK-002	1
NPN Inductive Sensor with Quick Disconnect*	All Models	OISN-019	1-2
PNP Inductive Sensor with Quick Disconnect*	All Models	OISP-019	1-2
Quick Disconnect 2 Meter Cable Length*	All Models	CABL-010	1-2
Quick Disconnect 5 Meter Cable Length*	All Models	CABL-013	1-2

Pneumatic Accessories	Model Numbers	Part Number	Qty/Unit
Fail Safe Valve (Imperial)	All Models	OFSV-001	1
Fail Safe Valve (Metric)	All Models	OFSV-004	1

*Sensor and cable sold separately.

2-Jaw General Industrial Grippers | Technical Specifications

Specifications	Units	5	5-FS	10
Total Rated Grip Force **F** @ 100 psi [7 bar]	N [lbs]	156 [35]	178 [40]	
Total Stroke	mm [in]	4.1 [0.16]		6.4 [0.25]
Weight	kg [lbs]	0.08 [0.18]		0.13 [0.28]
Pressure Range	bar [psi]	3-7 [40-100]		
Ingress Protection Class (IP)		IP43		
Displacement	cm^3 [in^3]	0.7 [0.042]		1.6 [0.098]
Temperature Range (Buna-N seals)	°C [°F]	-35°~80° [-30°~180°]		
Temperature Range (Viton® seals)	°C [°F]	-30°~150° [-20°~300°]		
Actuation	sec	0.14		0.13
Accuracy	mm [in]	±0.03 [±0.001]		
Repeatability	mm [in]	±0.01 [±0.0005]		
Valve to Actuate		4-way, 2-position		

RP-5

2-Jaw Parallel Grippers | Dimensions and Technical Specifications

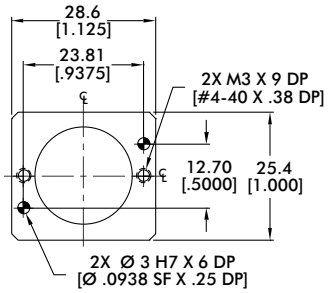

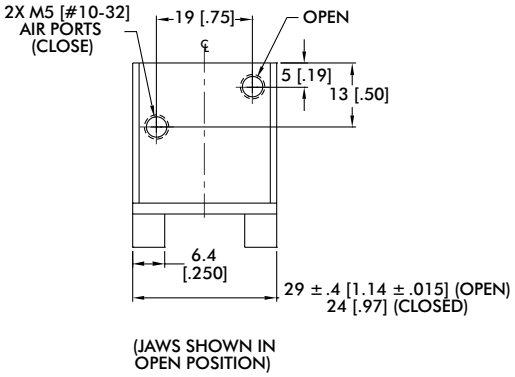

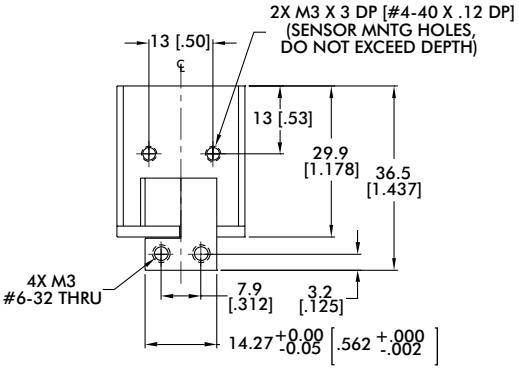

mm [INCH]

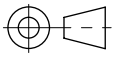

THIRD ANGLE
PROJECTION

Seal Repair Kits	RP-5
Buna-N Seal Repair Kit	SLKT-052
Viton® Seal Repair Kit	SLKT-052V

Loading Information

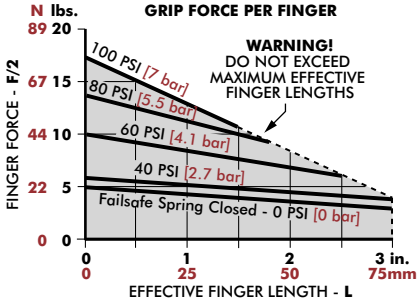

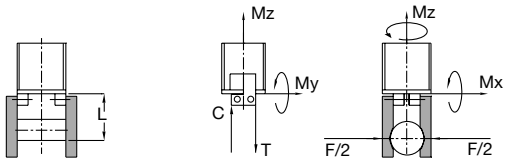

RP-5	Static	Dynamic
Maximum Tensile **T**	222 N [50 lbs]	31 N [7 lbs]
Maximum Compressive **C**	334 N [75 lbs]	53 N [12 lbs]
Maximum Moment $\mathbf{M_x}$	3.4 Nm [30 in-lbs]	0.6 Nm [5 in-lbs]
Maximum Moment **My**	3.4 Nm [30 in-lbs]	0.6 Nm [5 in-lbs]
Maximum Moment $\mathbf{M_z}$	3.4 Nm [30 in-lbs]	0.6 Nm [5 in-lbs]

†Capacities are per set of jaws and are not simultaneous

Dimensions and technical information are subject to change without notice

2-Jaw Parallel Grippers | Dimensions and Technical Specifications

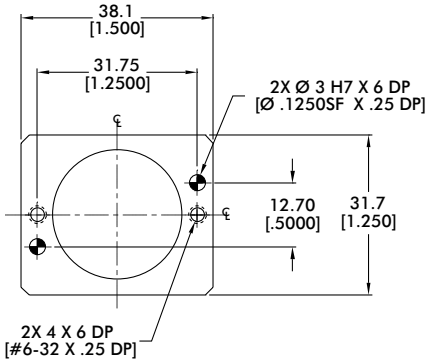

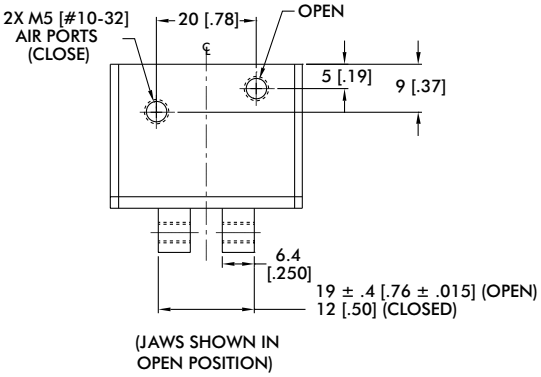

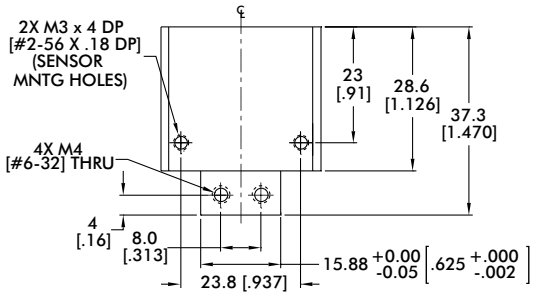

mm [INCH]

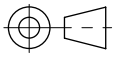

THIRD ANGLE
PROJECTION

Seal Repair Kits	RP-10
Buna-N Seal Repair Kit	SLKT-136
Viton® Seal Repair Kit	SLKT-136V

Loading Information

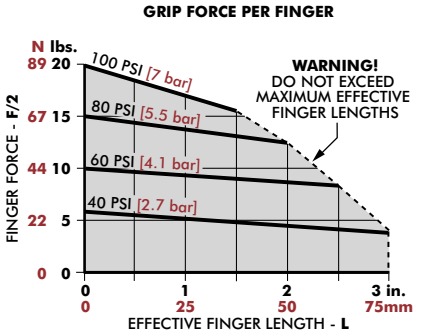

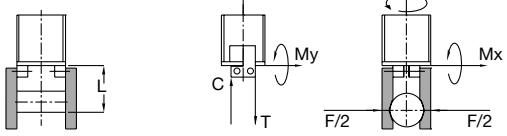

RP-10	Static	Dynamic
Maximum Tensile **T**	445 N [100 lbs]	67 N [15 lbs]
Maximum Compressive **C**	667 N [150 lbs]	111 N [25 lbs]
Maximum Moment $\mathbf{M_x}$	10.2 Nm [90 in-lbs]	1.5 Nm [15 in-lbs]
Maximum Moment $\mathbf{M_y}$	10.2 Nm [90 in-lbs]	1.5 Nm [15 in-lbs]
Maximum Moment $\mathbf{M_z}$	10.2 Nm [90 in-lbs]	1.5 Nm [15 in-lbs]

†Capacities are per set of jaws and are not simultaneous

RP SERIES

2-Jaw General Industrial Parallel Grippers | Features and Benefits | How To Order

Features:

- Widely used robust sealed design gripper
- Double wedge design for high impact applications
- Hardened steel bottom for part pressing applications
- Inductive jaw location sensing
- Grip force range from 178N [40 lbs] to 2669N [600 lbs]
- Stroke Range from 6.4mm [0.25 in] to 50.8mm [2.00 in]

Applications:

- Inline part pressing applications
- OEM machine pick and place
- Packaging applications
- Automotive assembly

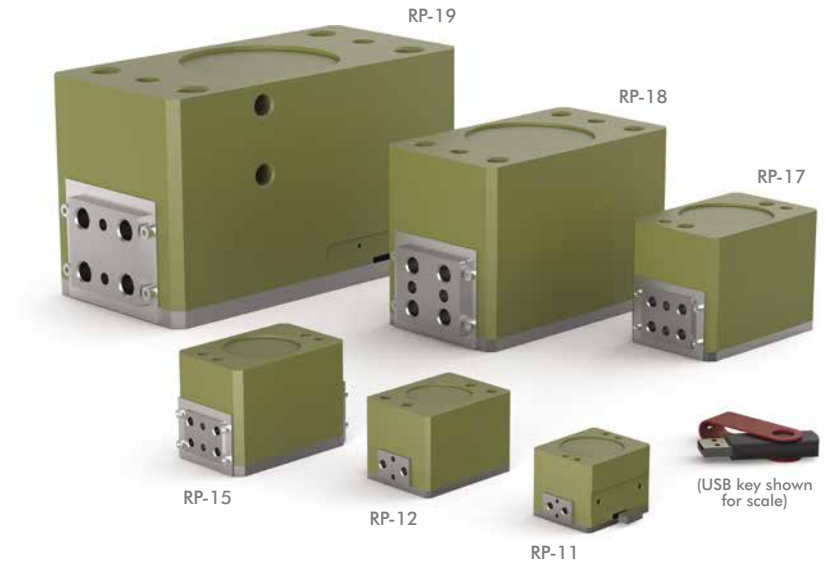

U.S. Patent #5,125,708

How To Order

Base Model	Size	Stroke	Description
RP	11 17	"Blank"	Standard Stroke
	12 18	D	Alternate Stroke
	15 19		

Unit Type	Description	Seals	Description
"Blank"	Imperial	"Blank"	Buna-N
M	Metric	V	Viton® High Temperature

Accessories

Sensor Accessories	Model Numbers	Part Number	Qty/Unit
Sensor Mounting Kit for Imperial & Metric Units (mounts 2 sensors)	See Datasheet		1
NPN Inductive Sensor with Quick Disconnect*	11, 12, 15	OISN-019	1-2
PNP Inductive Sensor with Quick Disconnect*	11, 12, 15	OISP-019	1-2
NPN Inductive Sensor with Quick Disconnect*	17, 18, 19	OISN-011	1-2
PNP Inductive Sensor with Quick Disconnect*	17, 18, 19	OISP-011	1-2
Quick Disconnect 2 Meter Cable Length*	All Models	CABL-010	1-2
Quick Disconnect 5 Meter Cable Length*	All Models	CABL-013	1-2

Pneumatic Accessories	Model Numbers	Part Number	Qty/Unit
Fail Safe Valve (Imperial)	See Datasheet		1
Fail Safe Valve (Metric)	See Datasheet		1

*Sensor and cable sold separately.

2-Jaw General Industrial Parallel Grippers | Technical Specifications

Specifications	Units	11	11-D	12	12-D	15	15-D
Total Rated Grip Force **F** @ 100 psi [7 bar]	N [lbs]	178 [40]	312 [70]	178 [40]	267 [60]	310 [70]	445 [100]
Total Stroke	mm [in]	6.4 [0.25]	4 [0.16]	9.5 [0.38]	6 [0.24]	12.7 [0.50]	8 [0.31]
Weight	kg [lbs]	0.12 [0.26]		0.25 [0.56]		0.57 [1.25]	
Pressure Range	bar [psi]	3-7 [40-100]					
Ingress Protection Class (IP)		IP43					
Displacement	cm^3 [in^3]	1.6 [0.098]		2.5 [0.150]		4.9 [0.300]	
Temperature Range (Buna-N seals)	°C [°F]	-35°~80° [-30°~180°]					
Temperature Range (Viton® seals)	°C [°F]	-30°~150° [-20°~300°]					
Actuation	sec	0.13				0.20	
Accuracy	mm [in]	±0.05 [±0.002]					
Repeatability	mm [in]	±0.03 [±0.001]					
Valve to Actuate		4-way, 2-position					

Specifications	Units	17	17-D	18	18-D	19	19-D
Total Rated Grip Force **F** @ 100 psi [7 bar]	N [lbs]	979 [220]	578 [130]	1779 [400]	1112 [250]	2669 [600]	3336 [750]
Total Stroke	mm [in]	19.1 [0.75]	28 [1.10]	31.8 [1.25]	43 [1.70]	50.8 [2.00]	38.1 [1.50]
Weight	kg [lbs]	1.0 [2.2]		3.5 [7.7]		9.5 [21]	
Pressure Range	bar [psi]	3-7 [40-100]					
Ingress Protection Class (IP)		IP43					
Displacement	cm^3 [in^3]	22.9 [1.400]		72.1 [4.400]		157.3 [9.600]	
Temperature Range (Buna-N seals)	°C [°F]	-35°~80° [-30°~180°]					
Temperature Range (Viton® seals)	°C [°F]	-30°~150° [-20°~300°]					
Actuation	sec	0.18		0.22		0.50	
Accuracy	mm [in]	±0.08 [±0.003]					
Repeatability	mm [in]	±0.03 [±0.001]					
Valve to Actuate		4-way, 2-position					

RP-11

2-Jaw General Industrial Parallel Grippers | Dimensions and Technical Specifications

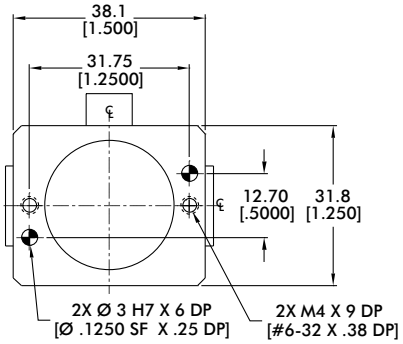

Sensor Accessories	RP-11
Inductive Sensor Mounting Kit (mounts 2 sensors)	OSMK-003

Seal Repair Kits	RP-11
Buna-N Seal Repair Kit	SLKT-036
Viton® Seal Repair Kit	SLKT-036V

Pneumatic Accessories	RP-11
Fail Safe Valve (Imperial)	OFSV-001
Fail Safe Valve (Metric)	OFSV-004

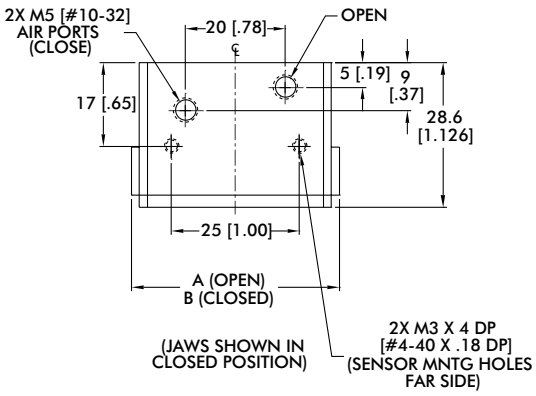

Model	A	B
RP-11	48 [1.88]	41 [1.63]
RP-11-D	45 [1.79]	

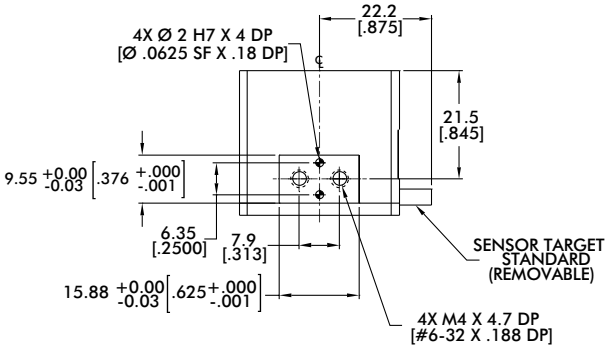

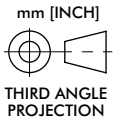

Loading Information

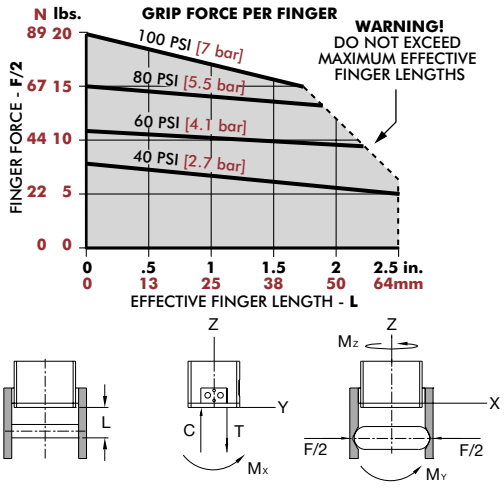

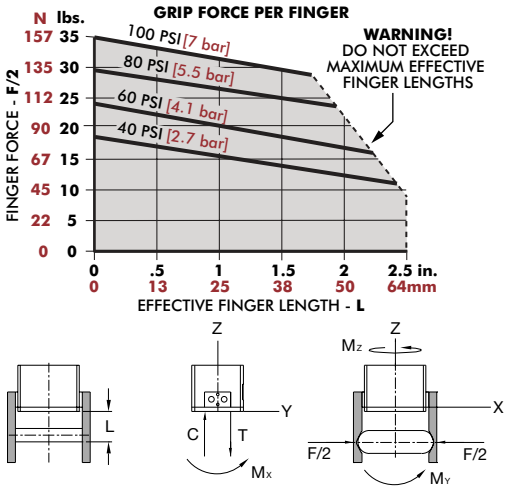

RP-11	Static	Dynamic
Maximum Tensile **T**	445 N [100 lbs]	111 N [25 lbs]
Maximum Compressive **C**	890 N [200 lbs]	111 N [25 lbs]
Maximum Moment M_x	11 Nm [100 in-lbs]	2 Nm [17 in-lbs]
Maximum Moment **My**	11 Nm [100 in-lbs]	2 Nm [17 in-lbs]
Maximum Moment M_z	11 Nm [100 in-lbs]	2 Nm [17 in-lbs]

†Capacities are per set of jaws and are not simultaneous

RP-11-D	Static	Dynamic
Maximum Tensile **T**	445 N [100 lbs]	111 N [25 lbs]
Maximum Compressive **C**	890 N [200 lbs]	111 N [25 lbs]
Maximum Moment M_x	11 Nm [100 in-lbs]	2 Nm [17 in-lbs]
Maximum Moment **My**	11 Nm [100 in-lbs]	2 Nm [17 in-lbs]
Maximum Moment M_z	11 Nm [100 in-lbs]	2 Nm [17 in-lbs]

†Capacities are per set of jaws and are not simultaneous

Dimensions and technical information are subject to change without notice

2-Jaw General Industrial Parallel Grippers | Dimensions and Technical Specifications

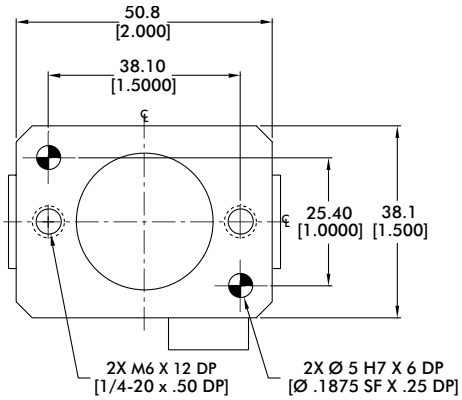

Sensor Accessories	RP-12
Inductive Sensor Mounting Kit (mounts 2 sensors)	OSMK-003

Seal Repair Kits	RP-12
Buna-N Seal Repair Kit	SLKT-040
Viton® Seal Repair Kit	SLKT-040V

Pneumatic Accessories	RP-12
Fail Safe Valve (Imperial)	OFSV-001
Fail Safe Valve (Metric)	OFSV-004

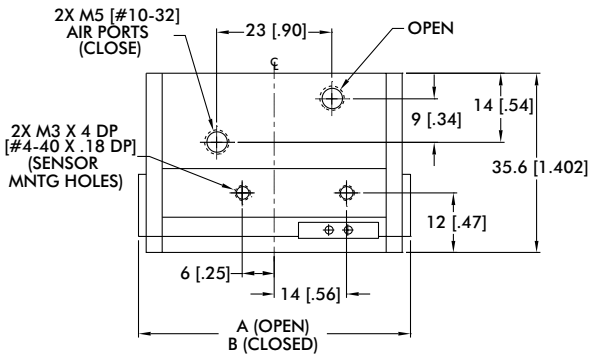

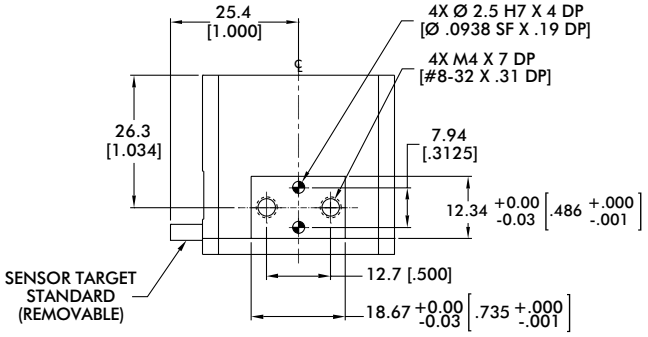

Model	A	B
RP-12	63 [2.50]	54 [2.13]
RP-12-D	60 [2.37]	

mm [INCH]

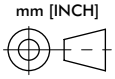

THIRD ANGLE
PROJECTION

Loading Information

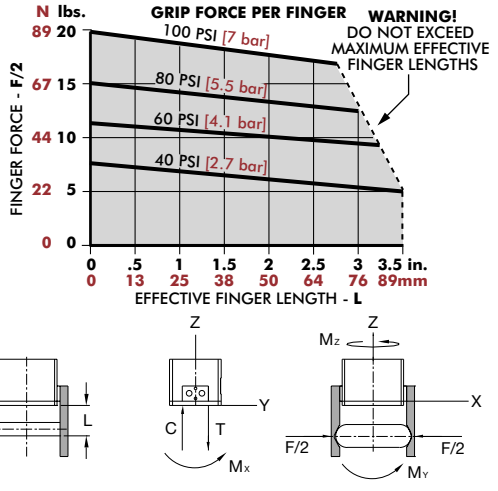

RP-12	Static	Dynamic
Maximum Tensile **T**	890 N [200 lbs]	111 N [25 lbs]
Maximum Compressive **C**	1779 N [400 lbs]	111 N [25 lbs]
Maximum Moment M_X	17 Nm [150 in-lbs]	3 Nm [25 in-lbs]
Maximum Moment **My**	17 Nm [150 in-lbs]	3 Nm [25 in-lbs]
Maximum Moment M_Z	17 Nm [150 in-lbs]	3 Nm [25 in-lbs]

†Capacities are per set of jaws and are not simultaneous

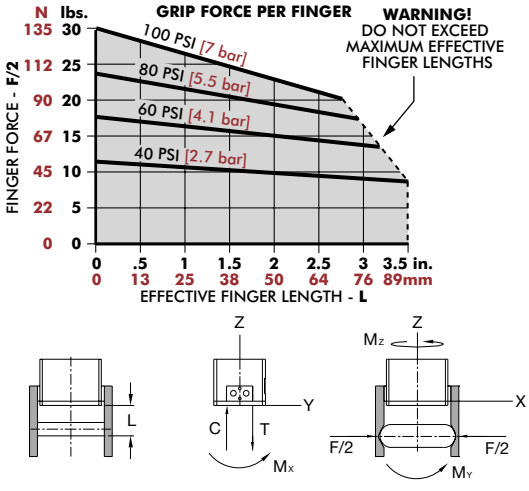

RP-12-D	Static	Dynamic
Maximum Tensile **T**	890 N [200 lbs]	111 N [25 lbs]
Maximum Compressive **C**	1779 N [400 lbs]	111 N [25 lbs]
Maximum Moment M_X	17 Nm [150 in-lbs]	3 Nm [25 in-lbs]
Maximum Moment **My**	17 Nm [150 in-lbs]	3 Nm [25 in-lbs]
Maximum Moment M_Z	17 Nm [150 in-lbs]	3 Nm [25 in-lbs]

†Capacities are per set of jaws and are not simultaneous

RP-15

2-Jaw General Industrial Parallel Grippers | Dimensions and Technical Specifications

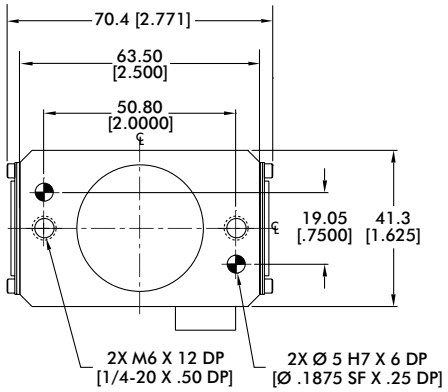

Sensor Accessories	RP-15
Inductive Sensor Mounting Kit (mounts 2 sensors)	OSMK-003

Seal Repair Kits	RP-15
Buna-N Seal Repair Kit	SLKT-041
Viton® Seal Repair Kit	SLKT-041V

Pneumatic Accessories	RP-15
Fail Safe Valve (Imperial)	OFSV-001
Fail Safe Valve (Metric)	OFSV-004

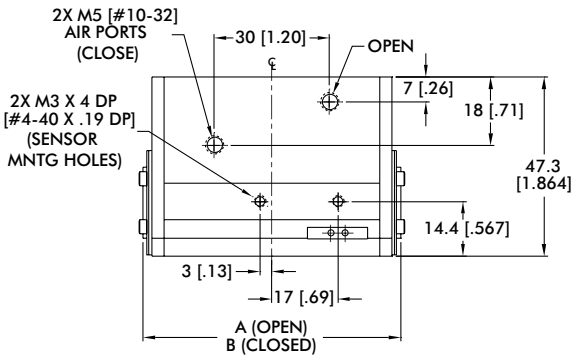

(JAWS SHOWN IN CLOSED POSITION)

Model	A	B
RP-15	81 [3.19]	68 [2.69]
RP-15-D	76 [3.00]	

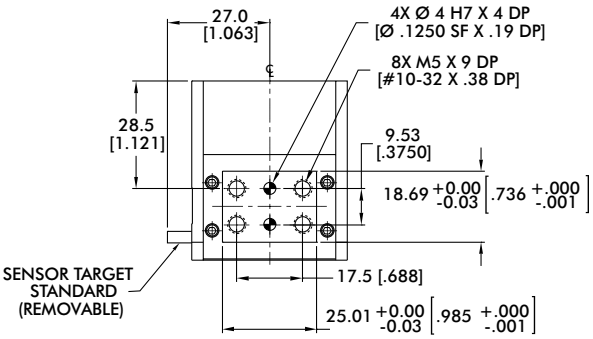

mm [INCH]

THIRD ANGLE PROJECTION

Loading Information

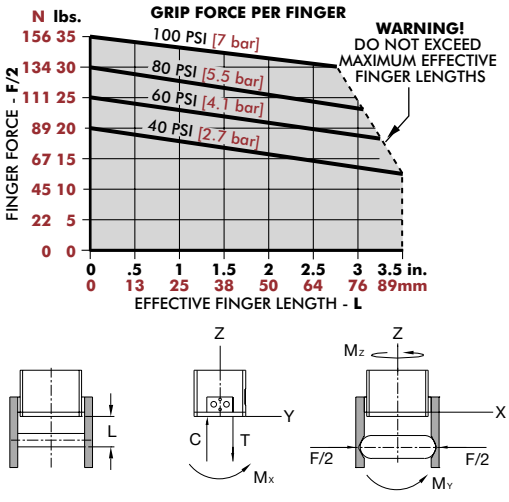

RP-15	Static	Dynamic
Maximum Tensile **T**	1779 N [400 lbs]	222 N [50 lbs]
Maximum Compressive **C**	3336 N [750 lbs]	222 N [50 lbs]
Maximum Moment M_x	34 Nm [300 in-lbs]	6 Nm [50 in-lbs]
Maximum Moment **My**	34 Nm [300 in-lbs]	6 Nm [50 in-lbs]
Maximum Moment M_z	34 Nm [300 in-lbs]	6 Nm [50 in-lbs]

†Capacities are per set of jaws and are not simultaneous

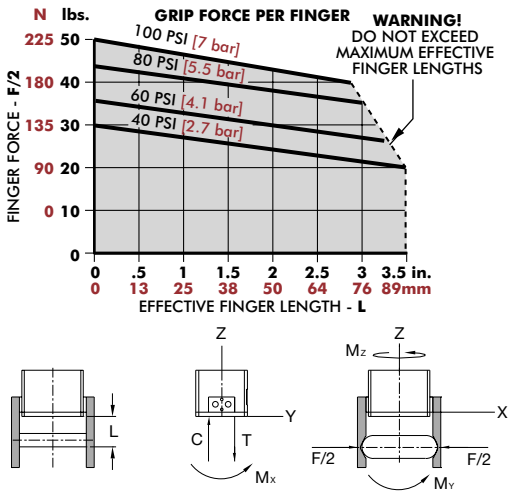

RP-15-D	Static	Dynamic
Maximum Tensile **T**	1779 N [400 lbs]	222 N [50 lbs]
Maximum Compressive **C**	3336 N [750 lbs]	222 N [50 lbs]
Maximum Moment M_x	34 Nm [300 in-lbs]	6 Nm [50 in-lbs]
Maximum Moment **My**	34 Nm [300 in-lbs]	6 Nm [50 in-lbs]
Maximum Moment M_z	34 Nm [300 in-lbs]	6 Nm [50 in-lbs]

†Capacities are per set of jaws and are not simultaneous

2-Jaw General Industrial Parallel Grippers | Dimensions and Technical Specifications

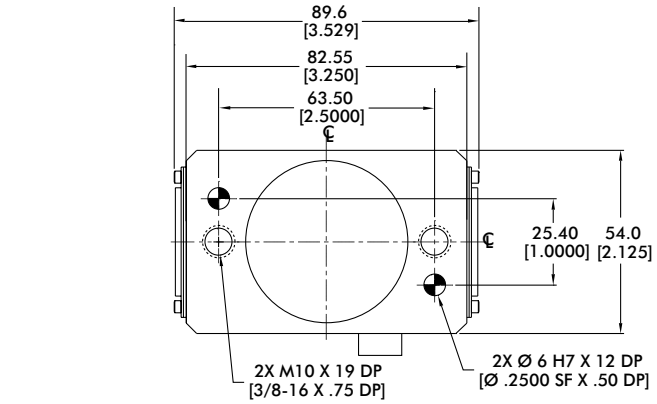

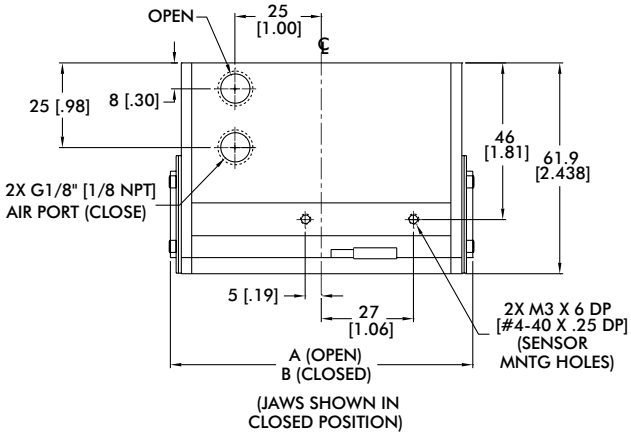

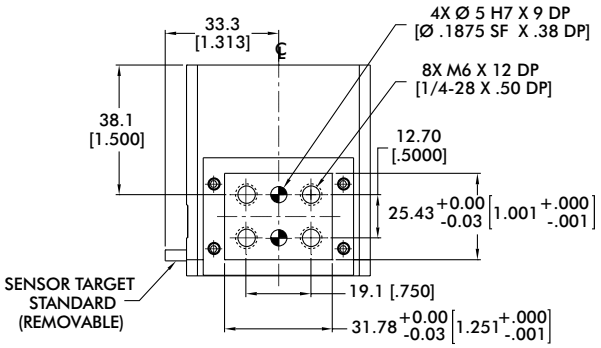

Model	A	B
RP-17	107 [4.25]	89 [3.50]
RP-17-D	117 [4.60]	

mm [INCH]

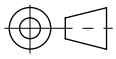

THIRD ANGLE
PROJECTION

Sensor Accessories	RP-17
Inductive Sensor Mounting Kit (mounts 2 sensors)	OSMK-072

Seal Repair Kits	RP-17
Buna-N Seal Repair Kit	SLKT-042
Viton® Seal Repair Kit	SLKT-042V

Pneumatic Accessories	RP-17
Fail Safe Valve (Imperial)	OFSV-002
Fail Safe Valve (Metric)	OFSV-005

Loading Information

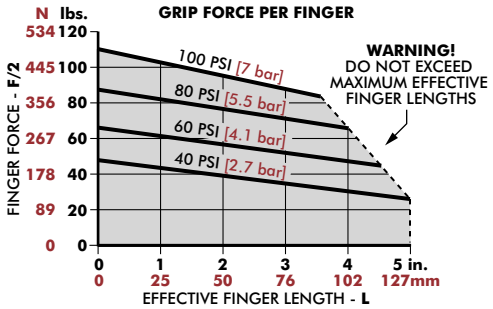

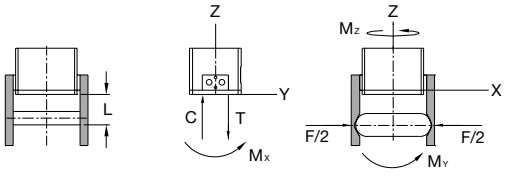

RP-17	Static	Dynamic
Maximum Tensile **T**	3336 N [750 lbs]	445 N [100 lbs]
Maximum Compressive **C**	6672 N [1500 lbs]	445 N [100 lbs]
Maximum Moment **Mx**	85 Nm [750 in-lbs]	14 Nm [125 in-lbs]
Maximum Moment **My**	85 Nm [750 in-lbs]	14 Nm [125 in-lbs]
Maximum Moment **Mz**	85 Nm [750 in-lbs]	14 Nm [125 in-lbs]

†Capacities are per set of jaws and are not simultaneous

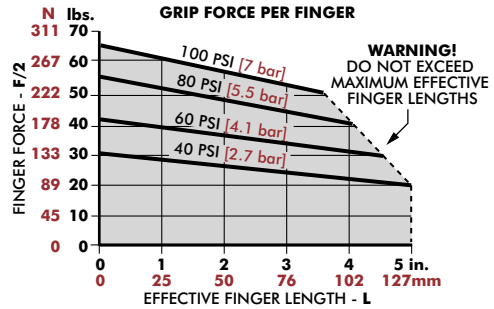

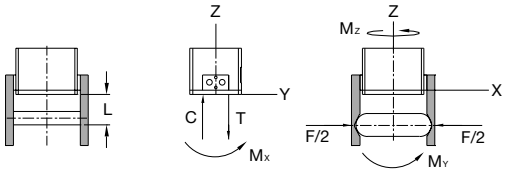

RP-17-D	Static	Dynamic
Maximum Tensile **T**	3336 N [750 lbs]	445 N [100 lbs]
Maximum Compressive **C**	6672 N [1500 lbs]	445 N [100 lbs]
Maximum Moment **Mx**	85 Nm [750 in-lbs]	14 Nm [125 in-lbs]
Maximum Moment **My**	85 Nm [750 in-lbs]	14 Nm [125 in-lbs]
Maximum Moment **Mz**	85 Nm [750 in-lbs]	14 Nm [125 in-lbs]

†Capacities are per set of jaws and are not simultaneous

RP-18

2-Jaw General Industrial Parallel Grippers | Dimensions and Technical Specifications

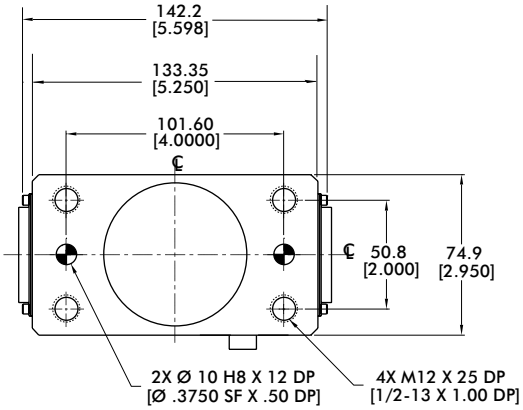

Sensor Accessories	RP-18
Inductive Sensor Mounting Kit (mounts 2 sensors)	OSMK-072

Seal Repair Kits	RP-18
Buna-N Seal Repair Kit	SLKT-043
Viton® Seal Repair Kit	SLKT-043V

Pneumatic Accessories	RP-18
Fail Safe Valve (Imperial)	OFSV-002
Fail Safe Valve (Metric)	OFSV-005

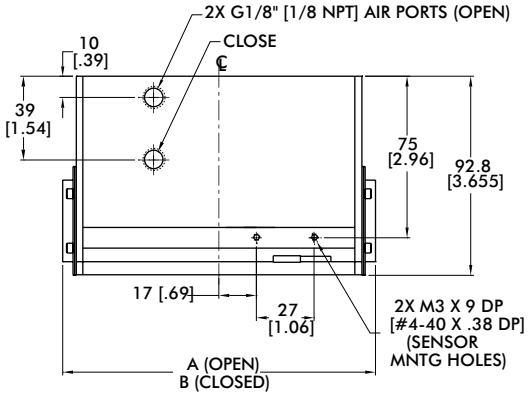

(JAWS SHOWN IN CLOSED POSITION)

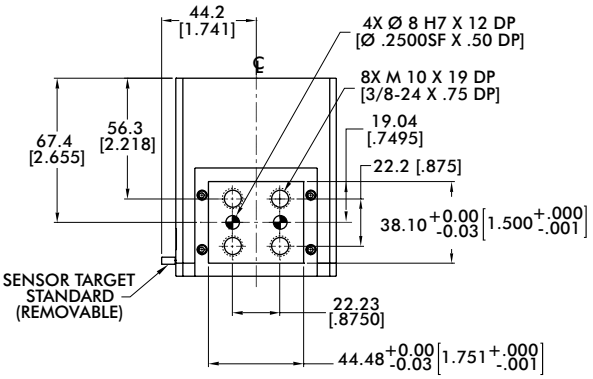

Model	A	B
RP-18	177 [7.00]	146 [5.75]
RP-18-D	190 [7.45]	

mm [INCH]

THIRD ANGLE
PROJECTION

Loading Information

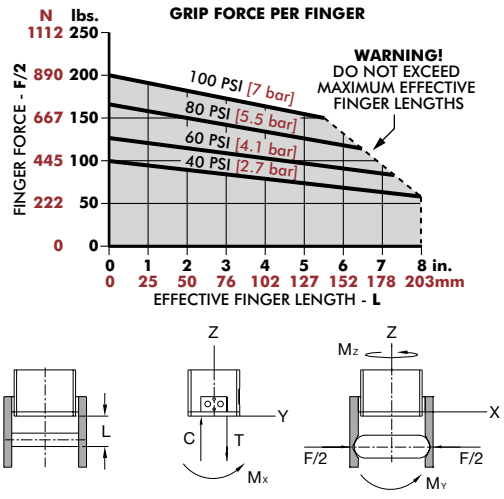

RP-18	Static	Dynamic
Maximum Tensile **T**	6672 N [1500 lbs]	1112 N [250 lbs]
Maximum Compressive **C**	13345 N [3000 lbs]	1112 N [250 lbs]
Maximum Moment M_x	170 Nm [1500 in-lbs]	28 Nm [250 in-lbs]
Maximum Moment M_y	170 Nm [1500 in-lbs]	28 Nm [250 in-lbs]
Maximum Moment M_z	170 Nm [1500 in-lbs]	28 Nm [250 in-lbs]

†Capacities are per set of jaws and are not simultaneous

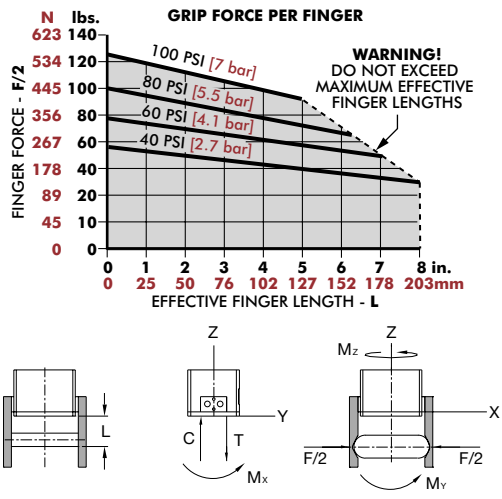

RP-18-D	Static	Dynamic
Maximum Tensile **T**	6672 N [1500 lbs]	1112 N [250 lbs]
Maximum Compressive **C**	13345 N [3000 lbs]	1112 N [250 lbs]
Maximum Moment M_x	170 Nm [1500 in-lbs]	28 Nm [250 in-lbs]
Maximum Moment M_y	170 Nm [1500 in-lbs]	28 Nm [250 in-lbs]
Maximum Moment M_z	170 Nm [1500 in-lbs]	28 Nm [250 in-lbs]

†Capacities are per set of jaws and are not simultaneous

Dimensions and technical information are subject to change without notice

2-Jaw General Industrial Parallel Grippers | Dimensions and Technical Specifications

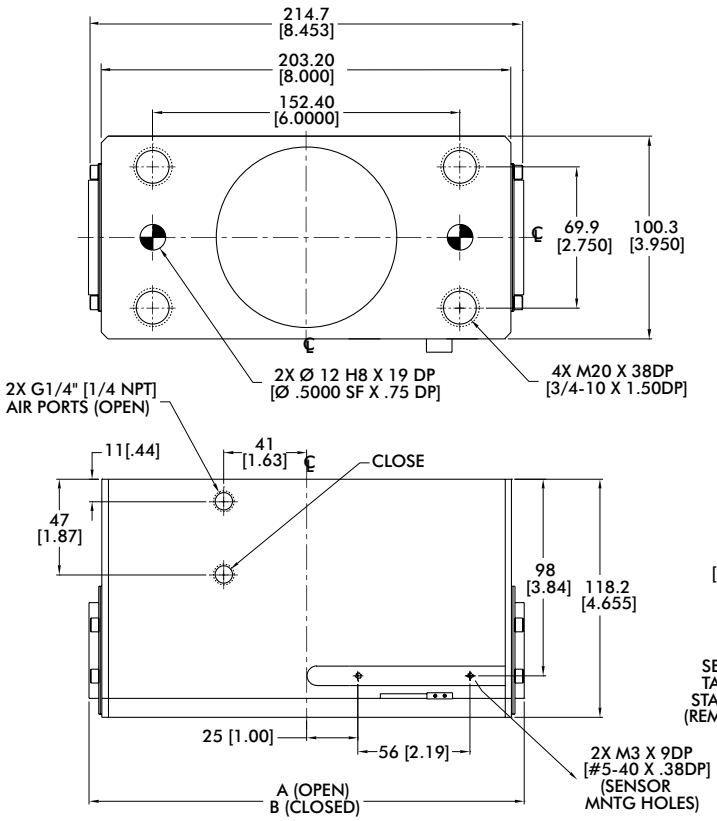

(JAWS SHOWN IN CLOSED POSITION)

Model	A	B
RP-19	266 [10.50]	216 [8.50]
RP-19-D	254 [10.00]	

mm [INCH]

THIRD ANGLE
PROJECTION

Sensor Accessories	RP-19
Inductive Sensor Mounting Kit (mounts 2 sensors)	OSMK-073

Seal Repair Kits	RP-19
Buna-N Seal Repair Kit	SLKT-044
Viton® Seal Repair Kit	SLKT-044V

Pneumatic Accessories	RP-19
Fail Safe Valve (Imperial)	OFSV-003
Fail Safe Valve (Metric)	OFSV-006

Loading Information

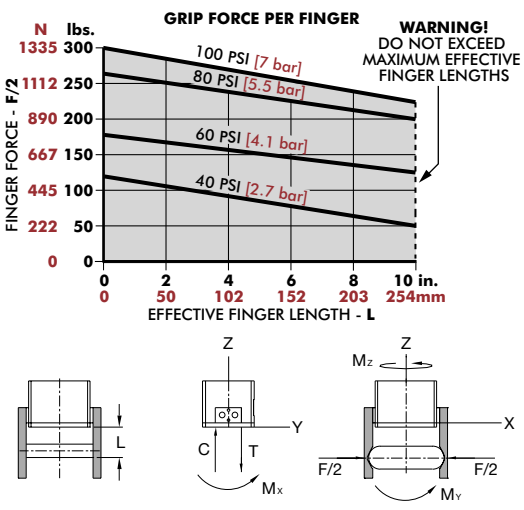

RP-19	Static	Dynamic
Maximum Tensile **T**	13345 N [3000 lbs]	1334 N [300 lbs]
Maximum Compressive **C**	26689 N [6000 lbs]	1334 N [300 lbs]
Maximum Moment M_x	565 Nm [5000 in-lbs]	56 Nm [500 in-lbs]
Maximum Moment M_y	565 Nm [5000 in-lbs]	56 Nm [500 in-lbs]
Maximum Moment M_z	565 Nm [5000 in-lbs]	56 Nm [500 in-lbs]

†Capacities are per set of jaws and are not simultaneous

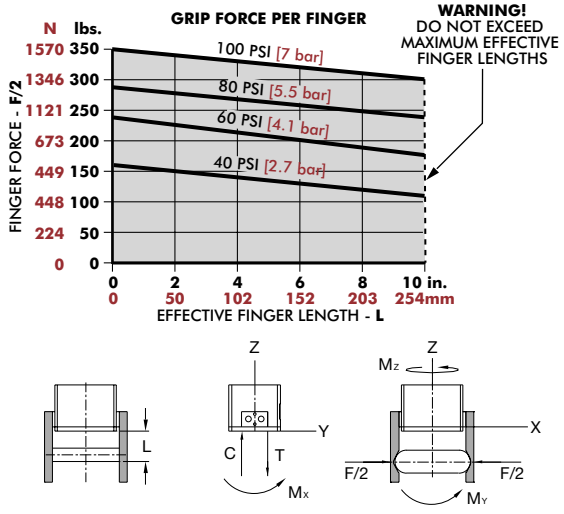

RP-19-D	Static	Dynamic
Maximum Tensile **T**	13345 N [3000 lbs]	1334 N [300 lbs]
Maximum Compressive **C**	26689 N [6000 lbs]	1334 N [300 lbs]
Maximum Moment M_x	565 Nm [5000 in-lbs]	56 Nm [500 in-lbs]
Maximum Moment M_y	565 Nm [5000 in-lbs]	56 Nm [500 in-lbs]
Maximum Moment M_z	565 Nm [5000 in-lbs]	56 Nm [500 in-lbs]

†Capacities are per set of jaws and are not simultaneous

RPM/RPMC SERIES

2-Jaw General Industrial Grippers | Features and Benefits | How To Order

Features:

- Miniature gripper for small part gripping
- Zero side play due to Dual V bearing system
- Low friction and smooth operation for precise part position repeatability
- Create compact gripper arrays with top manifold design
- Adjustable pre-load screws eliminates side play over life of unit
- Purge and scavenge ports for clean/harsh environment operation
- Units are lubricated with clean-room grease
- Class 10 rated clean-room (RPMC)



Applications:

- Ideal for semiconductor and life sciences laboratory applications
- Ultra small gripper for space constrained applications
- Sealed design operates in harsh environments (RPMC)
- Viton® seals option for High temperature applications -30°C to +150°C [-20°F to +300°F]

How To Order

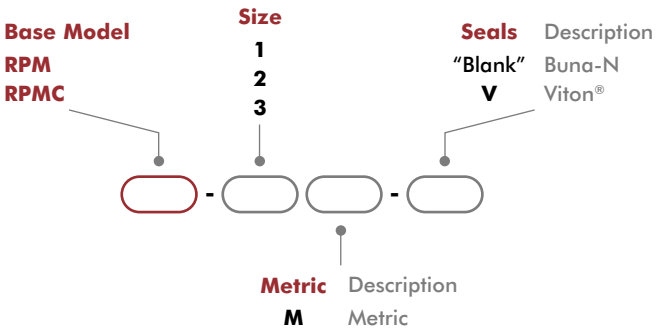

Accessories

Pneumatic Accessories	Model Numbers	Part Number	Qty/Unit
M3 Plumbing Fitting Push-in for 3mm O.D. Tube	All Models	PLFT-021	2
M3 Plumbing Fitting Barb for 2mm I.D. Tube	All Models	PLFT-022	2
Buna-N Seal Repair Kit	All Models	SLKT-121	1
Viton® Seal Repair Kit	All Models	SLKT-121V	1
Top Air Ports Manifold Seal Kit (available in Viton® only)	All Models (RPM)	SLKT-142V	1
Top Air Ports Manifold Seal Kit (available in Viton® only)	All Models (RPMC)	SLKT-143V	1

2-Jaw General Industrial Grippers | Technical Specifications

Specifications	Units	1	2	3
Total Rated Grip Force **F** @ 100 psi [7 bar]	N [lbs]	36 [8]		
Total Stroke	mm [in]	3.2 [0.13]	4.8 [0.19]	6.3 [0.25]
Weight	kg [lbs]	0.024 [0.052]	0.026 [0.058]	0.034 [0.074]
Pressure Range	bar [psi]	3-7 [40-100]		
Ingress Protection Class (IP)		IP 33 (RPM) / IP64 (RPMC)		
Displacement	cm^3 [in^3]	0.13 [0.008]	0.20 [0.012]	0.25 [0.015]
Temperature Range (Buna-N seals)	°C [°F]	-35°~80° [-30°~180°]		
Temperature Range (Viton® seals)	°C [°F]	-30°~120° [-20°~250°]		
Actuation (open/close)	sec	0.10		
Accuracy	mm [in]	±0.05 [±0.002]		
Repeatability	mm [in]	±0.03 [±0.001]		
Valve to Actuate		4-way, 2-position		

RPM-1M/RPMC-1M, RPM-2M/RPMC-2M

2-Jaw General Industrial Grippers | Dimensions

RPM-1M/RPMC-1M Dimensions

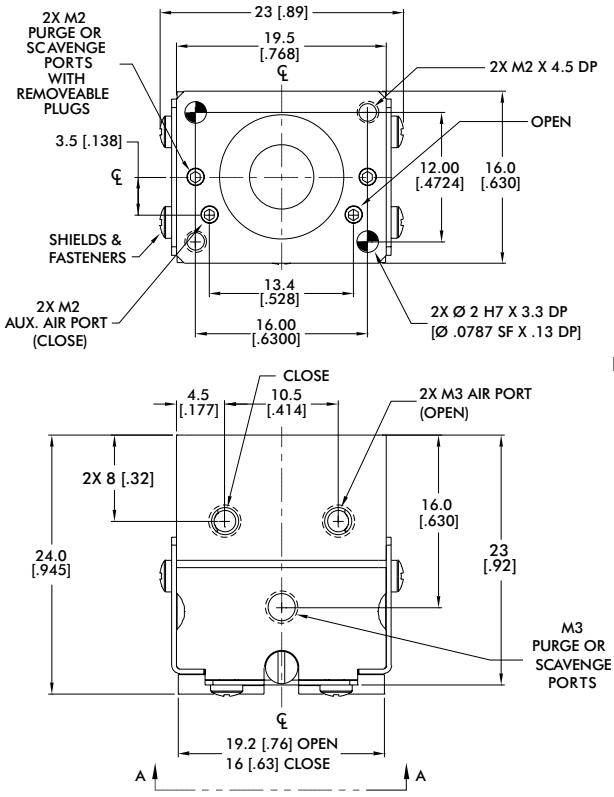

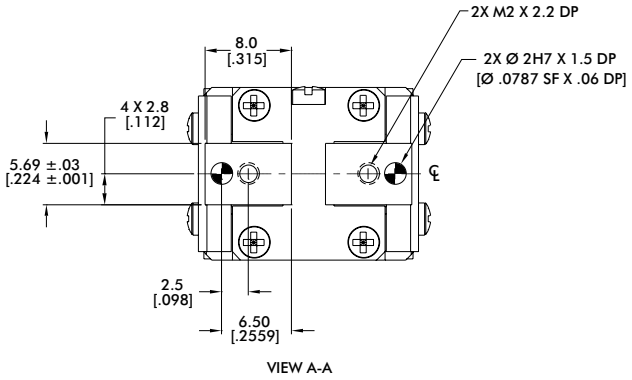

mm [INCH]

THIRD ANGLE PROJECTION

RPM-2M/RPMC-2M Dimensions

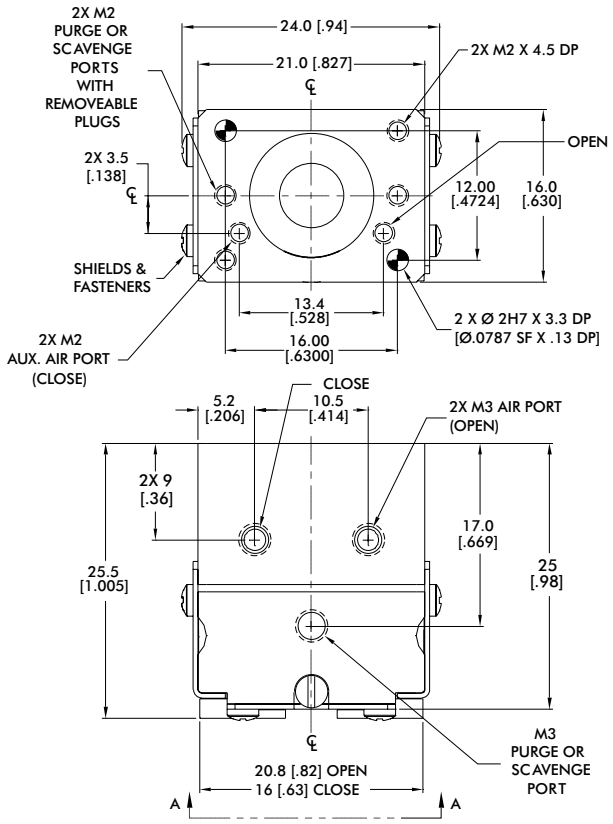

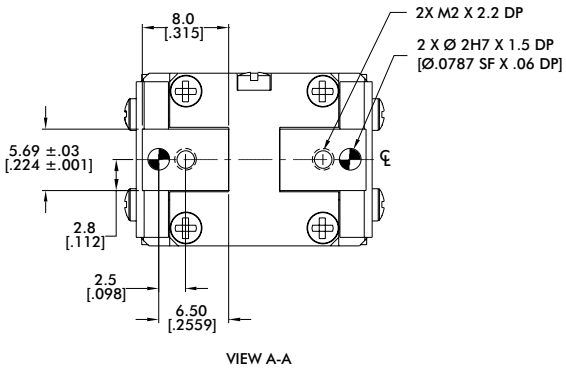

mm [INCH]

THIRD ANGLE PROJECTION

Dimensions and technical information are subject to change without notice

2-Jaw General Industrial Grippers | Dimensions and Technical Specifications

RPM-3M/RPMC-3M Dimensions

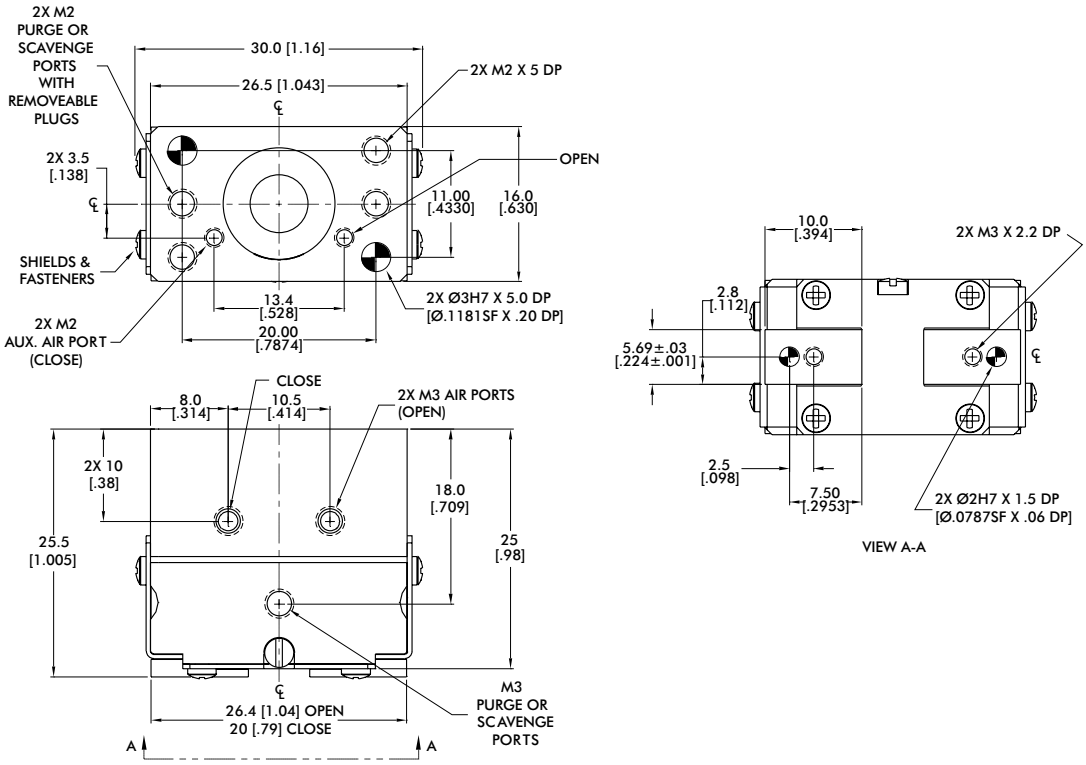

Loading Information

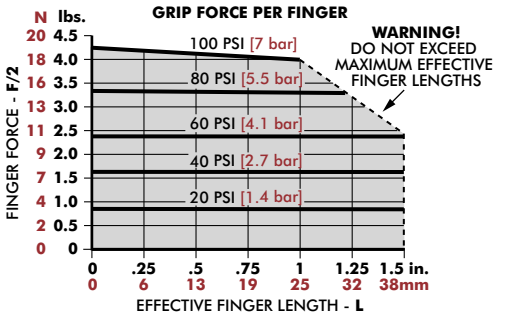

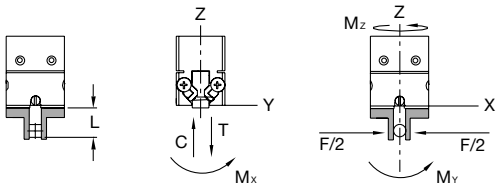

RPM	Static	Dynamic
Maximum Tensile **T**	89 N [20 lbs]	31 N [7 lbs]
Maximum Compressive **C**	89 N [20 lbs]	31 N [7 lbs]
Maximum Moment M_X	1 Nm [12 in-lbs]	0.5 Nm [4 in-lbs]
Maximum Moment M_Y	2 Nm [15 in-lbs]	0.6 Nm [5 in-lbs]
Maximum Moment M_Z	1 Nm [12 in-lbs]	0.5 Nm [4 in-lbs]

†Capacities are per set of jaws and are not simultaneous

RPS SERIES

2-Jaw General Industrial Parallel Grippers | Features and Benefits | How To Order

Features:

- Robust sealed design gripper
- Double wedge design for high impact applications
- Spring assist option for part retention in case of air pressure loss
- Inductive jaw location sensing
- Grip force range from 222N [50 lbs] to 2669N [600 lbs]
- Stroke Range from 6.4mm [0.25 in] to 31.8mm [1.25 in]

Applications:

- Automotive assembly
- Critical Part drop prevention applications
- General purpose spring assist gripping
- Packaging applications



U.S. Patent #5,125,708

How To Order

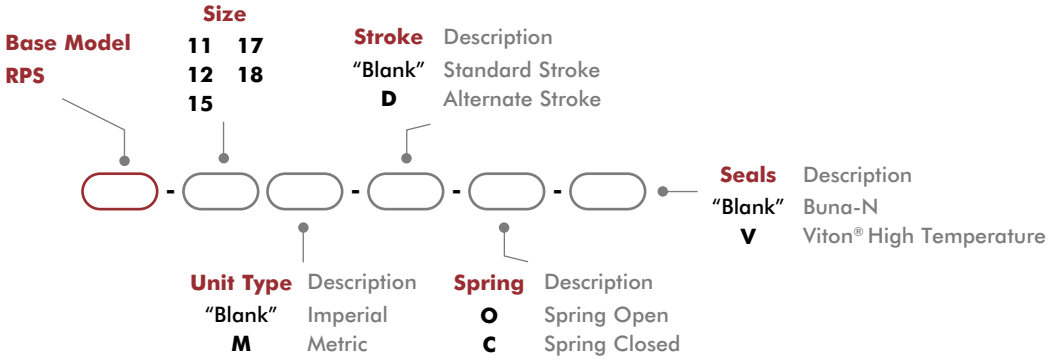

Accessories

Sensor Accessories	Model Numbers	Part Number	Qty/Unit
Sensor Mounting Kit for Imperial & Metric Units (mounts 2 sensors)	See Datasheet		1
NPN Inductive Sensor with Quick Disconnect*	11, 12, 15	OISN-019	1-2
PNP Inductive Sensor with Quick Disconnect*	11, 12, 15	OISP-019	1-2
NPN Inductive Sensor with Quick Disconnect*	17, 18	OISN-011	1-2
PNP Inductive Sensor with Quick Disconnect*	17, 18	OISP-011	1-2
Quick Disconnect 2 Meter Cable Length*	All Models	CABL-010	1-2
Quick Disconnect 5 Meter Cable Length*	All Models	CABL-013	1-2

Pneumatic Accessories	Model Numbers	Part Number	Qty/Unit
Fail Safe Valve (Imperial)	See Datasheet		1
Fail Safe Valve (Metric)	See Datasheet		1

*Sensor and cable sold separately.

2-Jaw General Industrial Parallel Grippers | Technical Specifications

Specifications	Units	11	11-D	12	12-D	15	15-D
Total Rated Grip Force **F** @ 100 psi [7 bar]	N [lbs]	222 [50]	378 [85]	267 [60]	400 [90]	400 [90]	110 [489]
Total Stroke	mm [in]	6.4 [0.25]	4 [0.16]	9.5 [0.38]	6 [0.24]	12.7 [0.50]	8 [0.31]
Weight	kg [lbs]	0.16 [0.36]		0.34 [0.76]		0.65 [1.44]	
Pressure Range	bar [psi]	3.4-7 [50-100]					
Ingress Protection Class (IP)		IP43					
Displacement	cm^3 [in^3]	1.6 [0.098]		2.5 [0.150]		4.9 [0.300]	
Temperature Range (Buna-N seals)	°C [°F]	-35°~80° [-30°~180°]					
Temperature Range (Viton® seals)	°C [°F]	-30°~150° [-20°~300°]					
Actuation	sec	0.15				0.17	
Accuracy	mm [in]	±0.05 [±0.002]					
Repeatability	mm [in]	±0.03 [±0.001]					
Valve to Required Actuate Single Acting		3-way, 2-position					
Valve to Required Actuate Double Acting		4-way, 2-position					

Specifications	Units	17	17-D	18	18-D
Total Rated Grip Force **F** @ 100 psi [7 bar]	N [lbs]	1334 [300]	180 [800]	2669 [600]	380 [1690]
Total Stroke	mm [in]	19.1 [0.75]	28 [1.10]	31.8 [1.25]	43 [1.70]
Weight	kg [lbs]	1.4 [3.00]		5.0 [11.02]	
Pressure Range	bar [psi]	3-7 [40-100]			
Ingress Protection Class (IP)		IP43			
Displacement	cm^3 [in^3]	22.9 [1.400]		72.1 [4.400]	
Temperature Range (Buna-N seals)	°C [°F]	-35°~80° [-30°~180°]			
Temperature Range (Viton® seals)	°C [°F]	-30°~150° [-20°~300°]			
Actuation	sec	0.31		0.51	
Accuracy	mm [in]	±0.08 [±0.003]			
Repeatability	mm [in]	±0.03 [±0.001]			
Valve to Required Actuate Single Acting		3-way, 2-position			
Valve to Required Actuate Double Acting		4-way, 2-position			

RPS-11

2-Jaw General Industrial Parallel Grippers | Dimensions and Technical Specifications

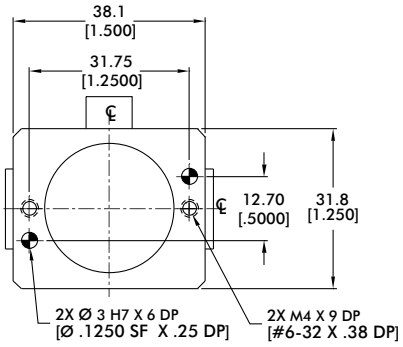

Sensor Accessories	RPS-11
Inductive Sensor Mounting Kit (mounts 2 sensors)	OSMK-003

Seal Repair Kits	RPS-11
Buna-N Seal Repair Kit	SLKT-036
Viton® Seal Repair Kit	SLKT-036V

Pneumatic Accessories	RPS-11
Fail Safe Valve (Imperial)	OFSV-001
Fail Safe Valve (Metric)	OFSV-004

Model	A	B
RPS-11	48 [1.88]	41 [1.63]
RPS-11-D	45 [1.79]	

mm [INCH]

THIRD ANGLE PROJECTION

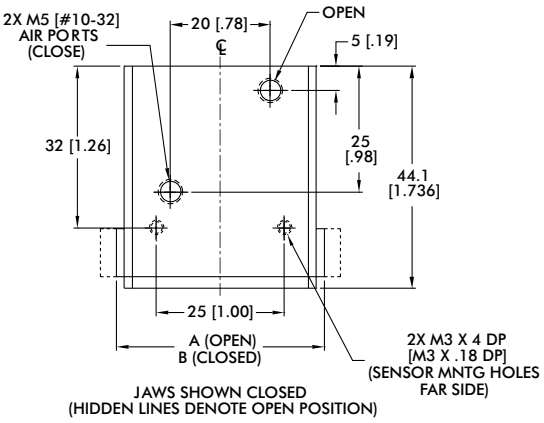

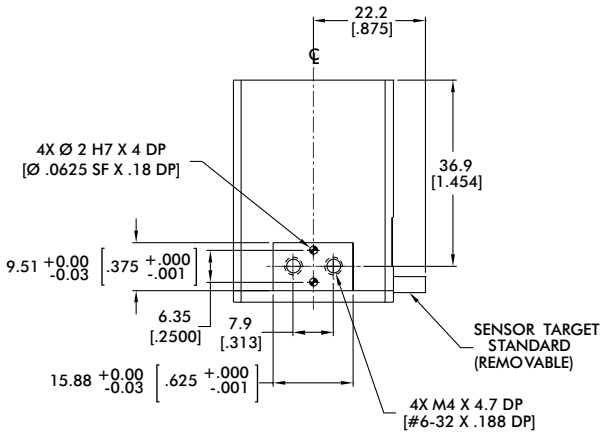

Loading Information

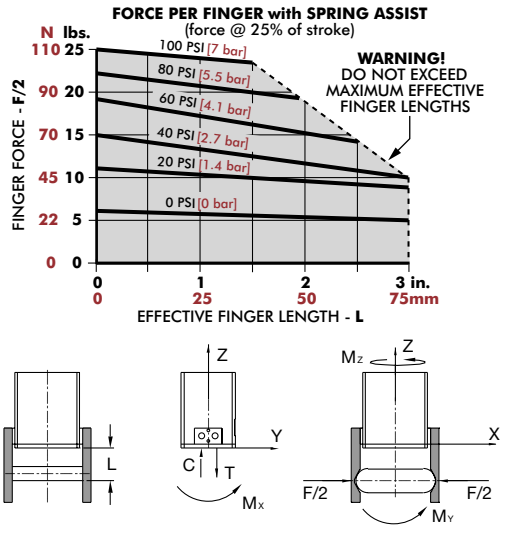

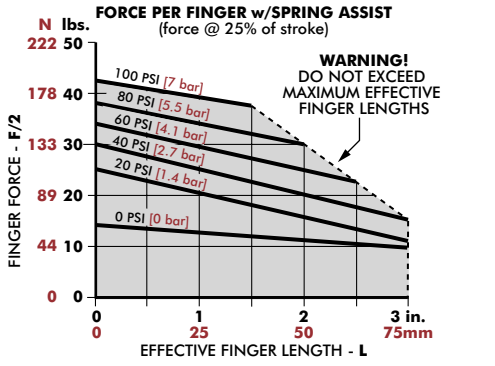

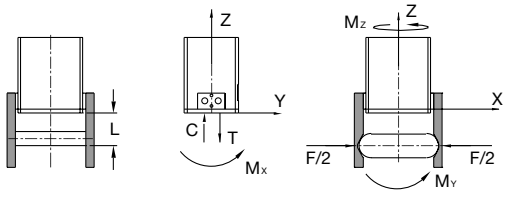

RPS-11	Static	Dynamic
Maximum Tensile **T**	445 N [100 lbs]	111 N [25 lbs]
Maximum Compressive **C**	890 N [200 lbs]	111 N [25 lbs]
Maximum Moment M_x	11 Nm [100 in-lbs]	3 Nm [25 in-lbs]
Maximum Moment M_y	11 Nm [100 in-lbs]	3 Nm [25 in-lbs]
Maximum Moment M_z	11 Nm [100 in-lbs]	3 Nm [25 in-lbs]

†Capacities are per set of jaws and are not simultaneous

RPS-11-D	Static	Dynamic
Maximum Tensile **T**	445 N [100 lbs]	111 N [25 lbs]
Maximum Compressive **C**	890 N [200 lbs]	111 N [25 lbs]
Maximum Moment M_x	11 Nm [100 in-lbs]	3 Nm [25 in-lbs]
Maximum Moment M_y	11 Nm [100 in-lbs]	3 Nm [25 in-lbs]
Maximum Moment M_z	11 Nm [100 in-lbs]	3 Nm [25 in-lbs]

†Capacities are per set of jaws and are not simultaneous

2-Jaw General Industrial Parallel Grippers | Dimensions and Technical Specifications

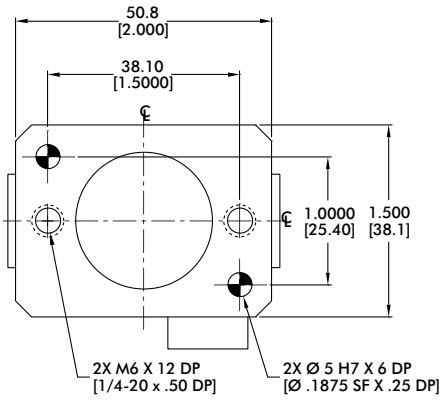

Sensor Accessories	RPS-12
Inductive Sensor Mounting Kit (mounts 2 sensors)	OSMK-003

Seal Repair Kits	RPS-12
Buna-N Seal Repair Kit	SLKT-040
Viton® Seal Repair Kit	SLKT-040V

Pneumatic Accessories	RPS-12
Fail Safe Valve (Imperial)	OFSV-001
Fail Safe Valve (Metric)	OFSV-004

Model	A	B
RPS-12	63 [2.50]	54 [2.13]
RPS-12-D	60 [2.37]	

mm [INCH]

THIRD ANGLE PROJECTION

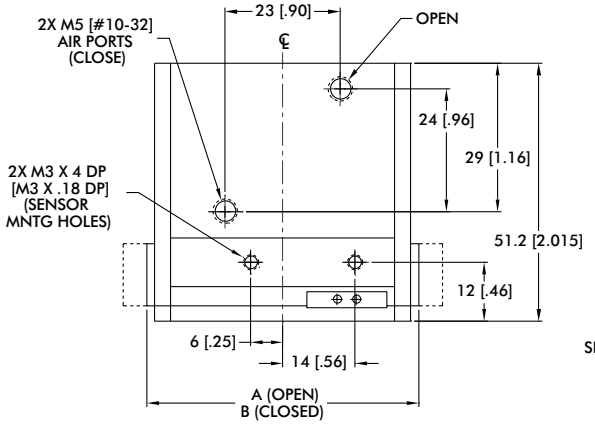

JAWS SHOWN IN CLOSED POSITION
(HIDDEN LINES DENOTE OPEN POSITION)

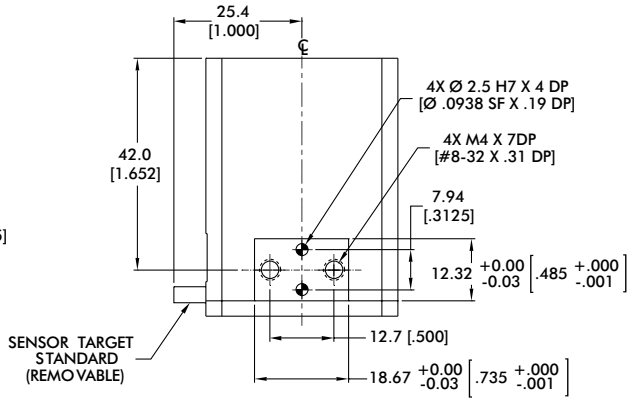

Loading Information

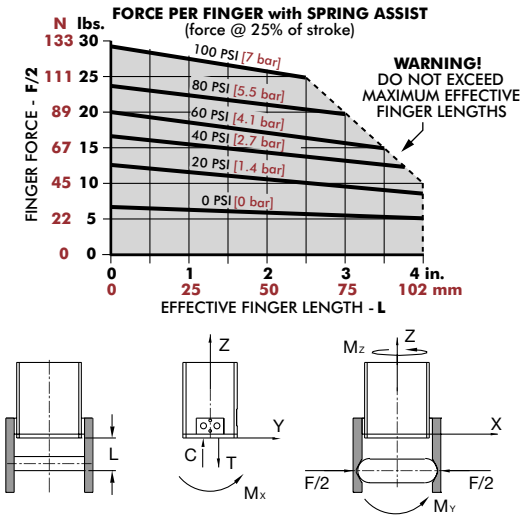

RPS-12	Static	Dynamic
Maximum Tensile **T**	890 N [200 lbs]	222 N [50 lbs]
Maximum Compressive **C**	1779 N [400 lbs]	222 N [50 lbs]
Maximum Moment **M_X**	17 Nm [150 in-lbs]	6 Nm [50 in-lbs]
Maximum Moment **My**	17 Nm [150 in-lbs]	6 Nm [50 in-lbs]
Maximum Moment **M_Z**	17 Nm [150 in-lbs]	6 Nm [50 in-lbs]

†Capacities are per set of jaws and are not simultaneous

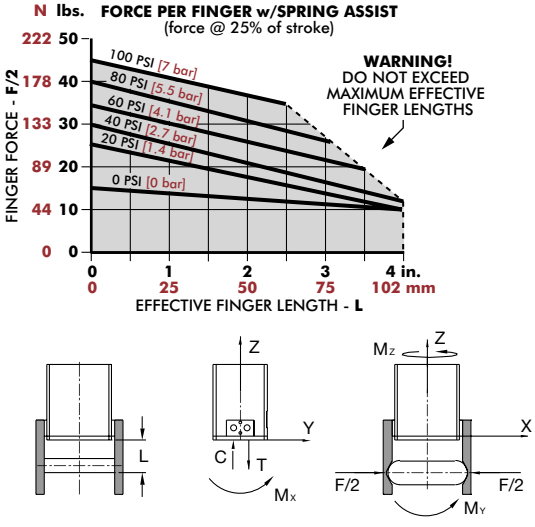

RPS-12-D	Static	Dynamic
Maximum Tensile **T**	890 N [200 lbs]	222 N [50 lbs]
Maximum Compressive **C**	1779 N [400 lbs]	222 N [50 lbs]
Maximum Moment **M_X**	17 Nm [150 in-lbs]	6 Nm [50 in-lbs]
Maximum Moment **My**	17 Nm [150 in-lbs]	6 Nm [50 in-lbs]
Maximum Moment **M_Z**	17 Nm [150 in-lbs]	6 Nm [50 in-lbs]

†Capacities are per set of jaws and are not simultaneous

RPS-15

2-Jaw General Industrial Parallel Grippers | Dimensions and Technical Specifications

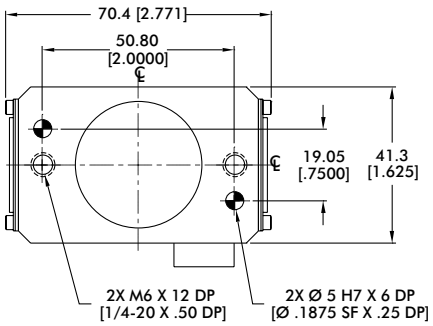

Sensor Accessories	RPS-15
Inductive Sensor Mounting Kit (mounts 2 sensors)	OSMK-003

Seal Repair Kits	RPS-15
Buna-N Seal Repair Kit	SLKT-041
Viton® Seal Repair Kit	SLKT-041V

Pneumatic Accessories	RPS-15
Fail Safe Valve (Imperial)	OFSV-001
Fail Safe Valve (Metric)	OFSV-004

Model	A	B
RPS-15	81 [3.19]	68 [2.69]
RPS-15-D	76 [3.00]	

mm [INCH]

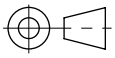

THIRD ANGLE PROJECTION

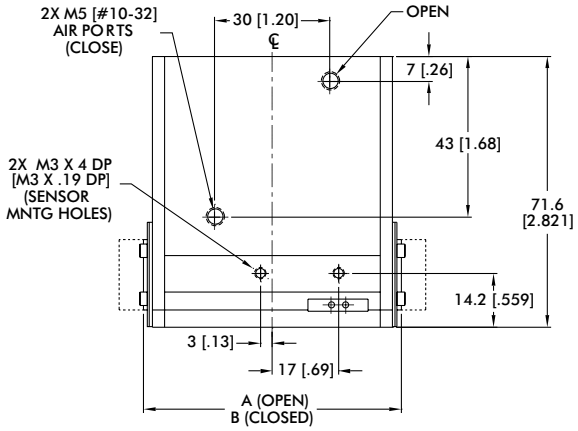

JAWS SHOWN IN CLOSED POSITION
(HIDDEN LINES DENOTE OPEN POSITION)

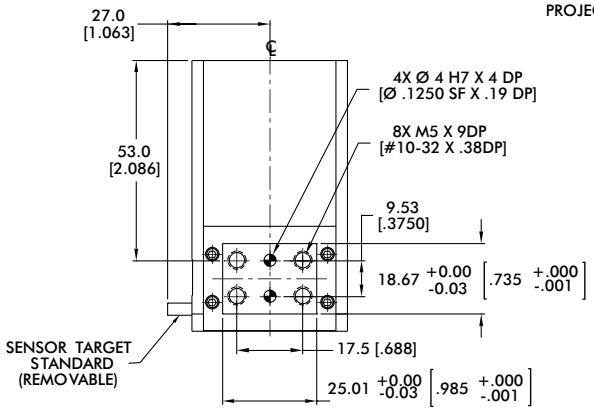

Loading Information

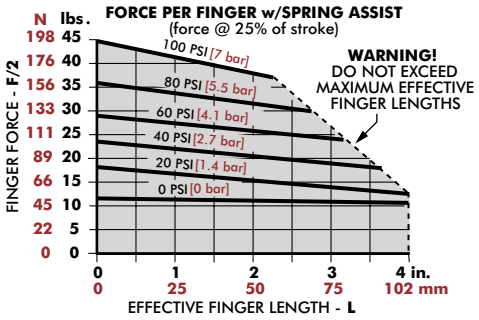

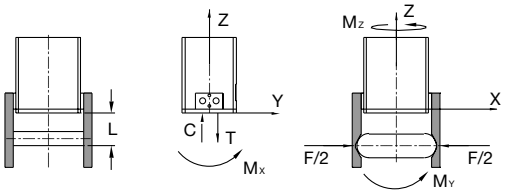

RPS-15	Static	Dynamic
Maximum Tensile **T**	1779 N [400 lbs]	445 N [100 lbs]
Maximum Compressive **C**	3336 N [750 lbs]	445 N [100 lbs]
Maximum Moment M_x	34 Nm [300 in-lbs]	11 Nm [100 in-lbs]
Maximum Moment **My**	34 Nm [300 in-lbs]	11 Nm [100 in-lbs]
Maximum Moment M_z	34 Nm [300 in-lbs]	11 Nm [100 in-lbs]

†Capacities are per set of jaws and are not simultaneous

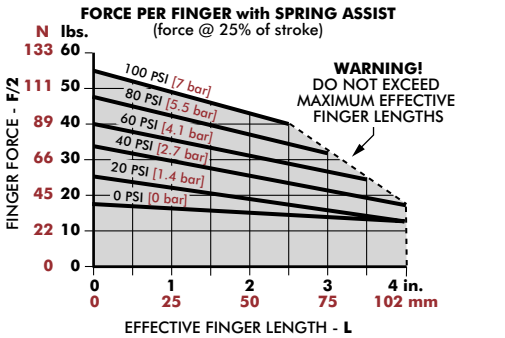

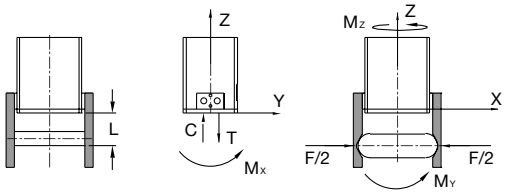

RPS-15-D	Static	Dynamic
Maximum Tensile **T**	1779 N [400 lbs]	445 N [100 lbs]
Maximum Compressive **C**	3336 N [750 lbs]	445 N [100 lbs]
Maximum Moment M_x	34 Nm [300 in-lbs]	11 Nm [100 in-lbs]
Maximum Moment **My**	34 Nm [300 in-lbs]	11 Nm [100 in-lbs]
Maximum Moment M_z	34 Nm [300 in-lbs]	11 Nm [100 in-lbs]

†Capacities are per set of jaws and are not simultaneous

Dimensions and technical information are subject to change without notice

2-Jaw General Industrial Parallel Grippers | Dimensions and Technical Specifications

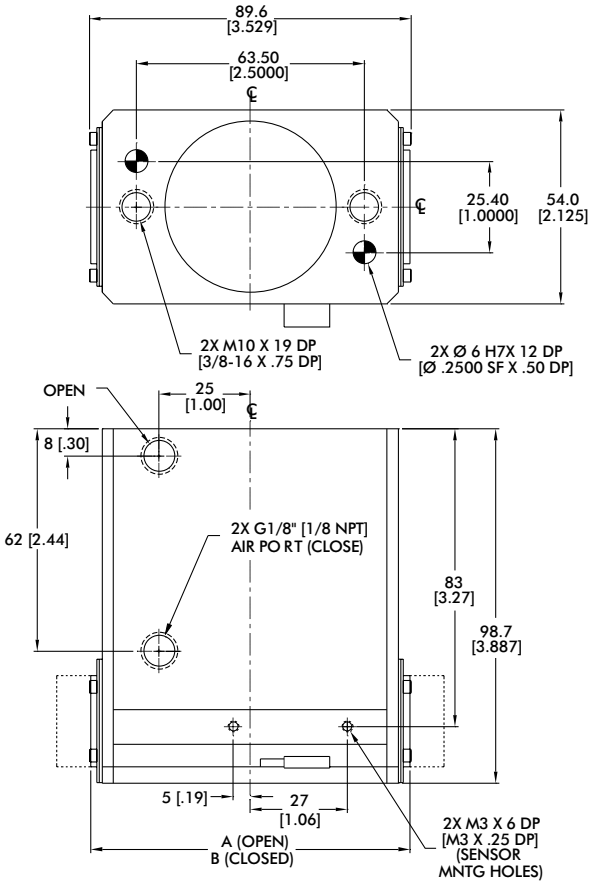

JAWS SHOWN IN CLOSED POSITION
(HIDDEN LINES DENOTE OPEN POSITION)

Sensor Accessories	RPS-17
Inductive Sensor Mounting Kit (mounts 2 sensors)	OSMK-072

Seal Repair Kits	RPS-17
Buna-N Seal Repair Kit	SLKT-042
Viton® Seal Repair Kit	SLKT-042V

Pneumatic Accessories	RPS-17
Fail Safe Valve (Imperial)	OFSV-002
Fail Safe Valve (Metric)	OFSV-005

Model	A	B
RPS-17	107 [4.25]	89 [3.50]
RPS-17-D	117 [4.60]	

mm [INCH]
THIRD ANGLE PROJECTION

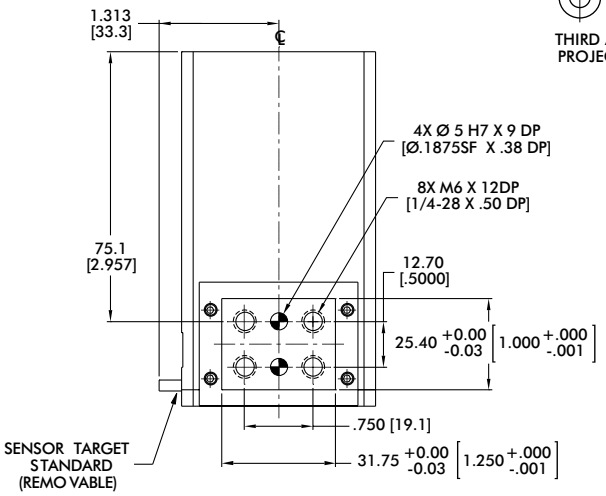

Loading Information

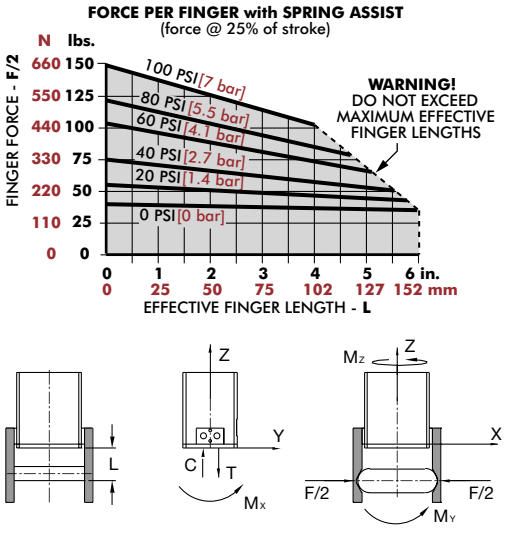

RPS-17	Static	Dynamic
Maximum Tensile **T**	3336 N [750 lbs]	890 N [200 lbs]
Maximum Compressive **C**	6672 N [1500 lbs]	890 N [200 lbs]
Maximum Moment **Mx**	85 Nm [750 in-lbs]	28 Nm [250 in-lbs]
Maximum Moment **My**	85 Nm [750 in-lbs]	28 Nm [250 in-lbs]
Maximum Moment **Mz**	85 Nm [750 in-lbs]	28 Nm [250 in-lbs]

†Capacities are per set of jaws and are not simultaneous

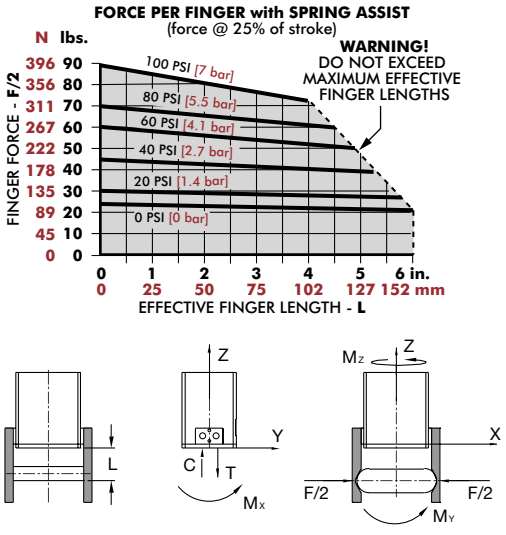

RPS-17-D	Static	Dynamic
Maximum Tensile **T**	3336 N [750 lbs]	890 N [200 lbs]
Maximum Compressive **C**	6672 N [1500 lbs]	890 N [200 lbs]
Maximum Moment **Mx**	85 Nm [750 in-lbs]	28 Nm [250 in-lbs]
Maximum Moment **My**	85 Nm [750 in-lbs]	28 Nm [250 in-lbs]
Maximum Moment **Mz**	85 Nm [750 in-lbs]	28 Nm [250 in-lbs]

†Capacities are per set of jaws and are not simultaneous

RPS-18

2-Jaw General Industrial Parallel Grippers | Dimensions and Technical Specifications

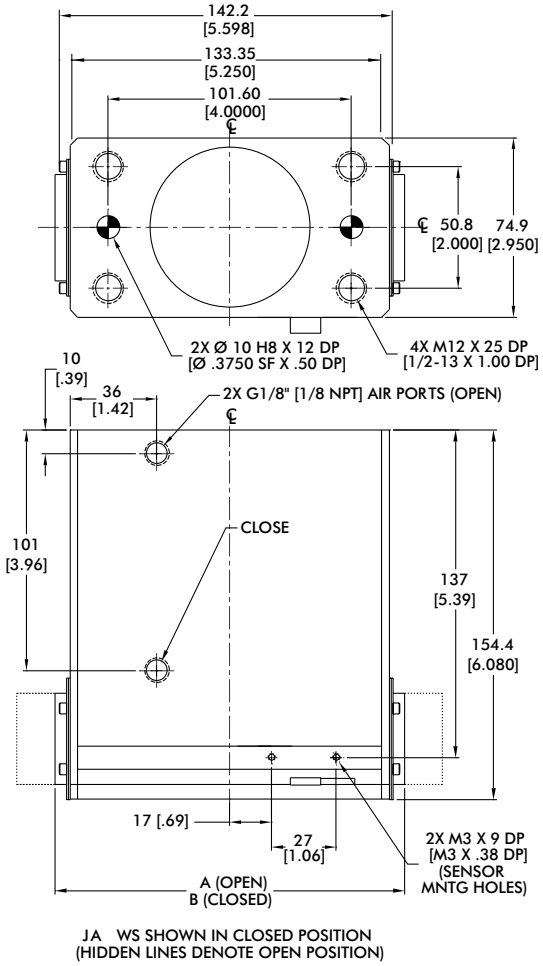

JA WS SHOWN IN CLOSED POSITION
(HIDDEN LINES DENOTE OPEN POSITION)

Sensor Accessories	RPS-18
Inductive Sensor Mounting Kit (mounts 2 sensors)	OSMK-072

Seal Repair Kits	RPS-18
Buna-N Seal Repair Kit	SLKT-043
Viton® Seal Repair Kit	SLKT-043V

Pneumatic Accessories	RPS-18
Fail Safe Valve (Imperial)	OFSV-002
Fail Safe Valve (Metric)	OFSV-005

Model	A	B
RPS-18	177 [7.00]	146 [5.75]
RPS-18-D	190 [7.45]	

mm [INCH]
THIRD ANGLE PROJECTION

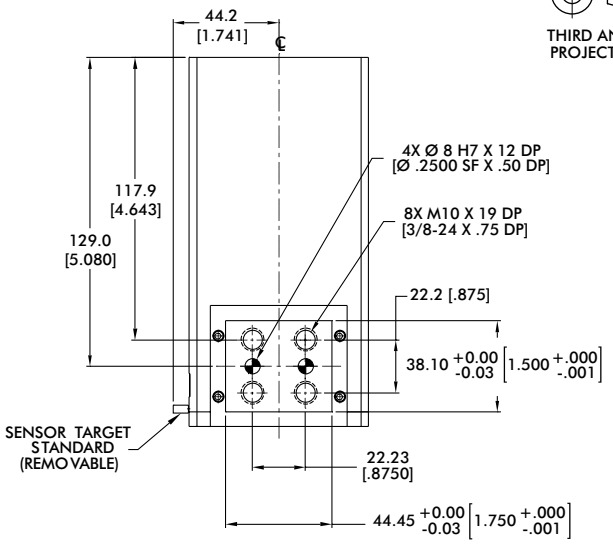

Loading Information

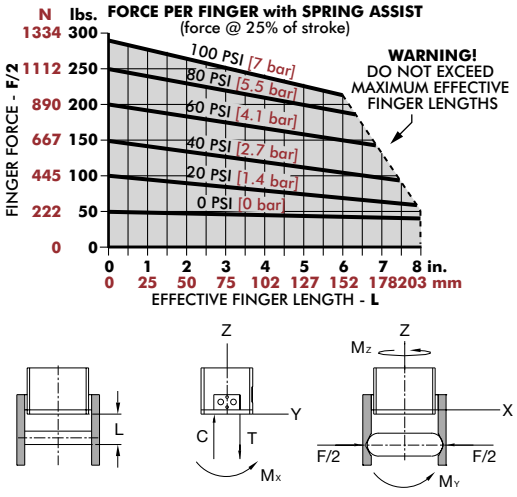

RPS-18	Static	Dynamic
Maximum Tensile **T**	6672 N [1500 lbs]	2224 N [500 lbs]
Maximum Compressive **C**	13345 N [3000 lbs]	2224 N [500 lbs]
Maximum Moment M_x	170 Nm [1500 in-lbs]	57 Nm [500 in-lbs]
Maximum Moment M_y	170 Nm [1500 in-lbs]	57 Nm [500 in-lbs]
Maximum Moment M_z	170 Nm [1500 in-lbs]	57 Nm [500 in-lbs]

†Capacities are per set of jaws and are not simultaneous

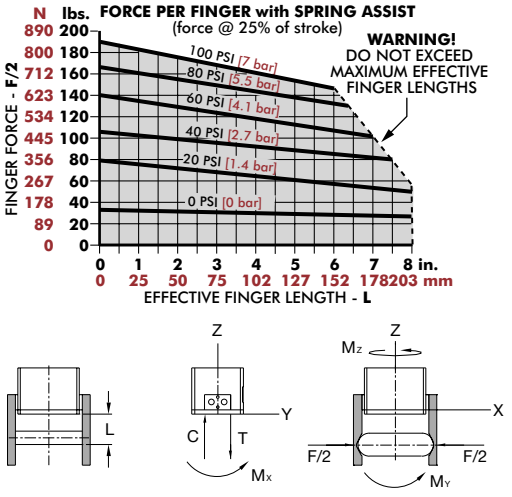

RPS-18-D	Static	Dynamic
Maximum Tensile **T**	6672 N [1500 lbs]	2224 N [500 lbs]
Maximum Compressive **C**	13345 N [3000 lbs]	2224 N [500 lbs]
Maximum Moment M_x	170 Nm [1500 in-lbs]	57 Nm [500 in-lbs]
Maximum Moment M_y	170 Nm [1500 in-lbs]	57 Nm [500 in-lbs]
Maximum Moment M_z	170 Nm [1500 in-lbs]	57 Nm [500 in-lbs]

†Capacities are per set of jaws and are not simultaneous

Notes

PNEUMATIC HEAVY DUTY GRIPPERS

Product Overview

Model		Stroke mm [in]	Grip Force N [lbs]	Operating Environment	Special Features	Page GR-HDP-#
DPW		19.05-63.5 [0.75-2.5]	222-801 [50-180]	IP66, Harsh Environment	High Impact Loading Gripper. Long Finger Lengths. Ideal for Long or Wide Part Handling. DIRECTCONNECT	3
RPB		101.6-203.2 [4.0-8.0]	2669 [600]	IP55 Using Purge Port & Shield Option, Harsh Environment	Gantry Systems, Heavy Payloads. Long Stroke. High Precision. Long Finger Lengths.	9
RPR		150-350 [5.9-13.78]	3520 [800]	IP65, Harsh Environment	Gantry Systems, Heavy Payloads. Long Finger Lengths. Rod Lock option	13
RPW		19.1-114.3 [0.75-4.5]	222-2091 [50-470]	IP54, Harsh Environment	High Impact Loading Gripper. Long Finger Lengths. Ideal for Long or Wide Part Handling.	17

Modular DIRECTCONNECT Mounting Style Examples:

Products can be mounted in multiple positions. Refer to datasheet for complete info.

Slide to Gripper

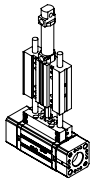

DLT Thruster Slide to DPW Parallel Gripper

Slide to Gripper

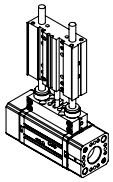

DLT Thruster Slide to DPW Parallel Gripper

Slide to Gripper

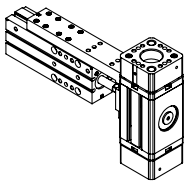

DLM Thruster Slide to DPW Parallel Gripper

DIRECTCONNECT™ Mounting Compatibility Chart

DESTACO's DIRECTCONNECT™ technology, allows all components of the system–grippers, rotaries and slides—to be mounted together directly. Look for matching icons on product datasheets for mounting compatibility.

Note: The numbers in the cell represent the metric screw size and basic mounting pattern.

S=Square, R=Rectangle. ie; 5S = M5 Screw with square mounting pattern.

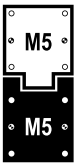

5S

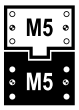

5R

Catalog Models		Grippers	
		DPW-250	DPW-375, 500
Base Slides	DLB-06,08	3R	
	DLB-10,12,16		5R
	DLB-20,25		
Thruster Slides	DLT-06,08	3R	
	DLT-10,12,16	3R	5R
	DLT-20,25		5R
	DLM-07	3R	
	DLM-9,12	3R	5R

DPW SERIES

2-Jaw Heavy-Duty Parallel Grippers | Features and Benefits | How To Order

Features:

- Robust wide body gripper with DIRECTCONNECT mounting
- Grip force ranges from 222N thru 800N
- Strokes range from 19mm thru 63.5mm
- Rack and pinion design for smooth operation
- Jaws well supported to grip large and wide parts
- Multiple air ports where top ports can be manifolded
- Shaft wiper seals for harsh environments
- Optional non-synchronous jaw operation

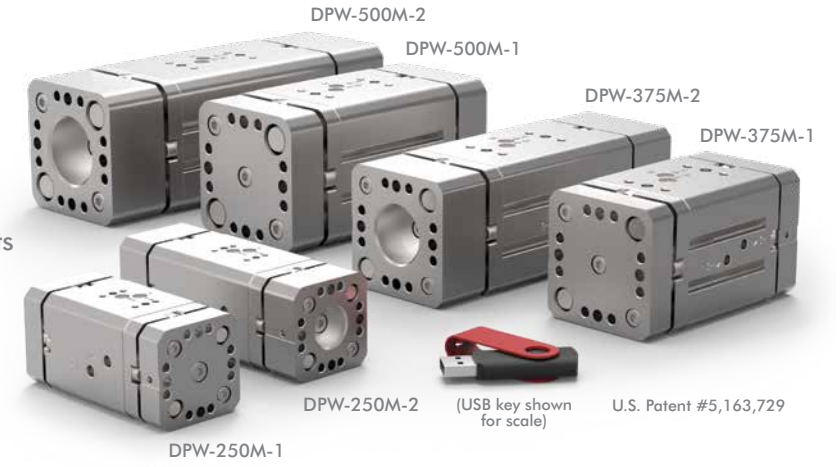

Applications:

- Wide part gripping
- Gantry systems
- Harsh gripping environment
- Long finger applications

How To Order

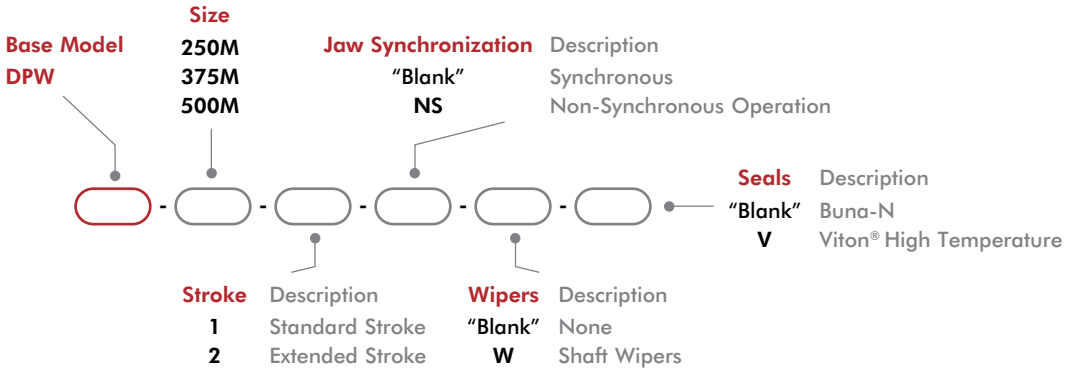

Accessories

Sensor Accessories	Model Numbers	Part Number	Qty/Unit
PNP Magneto Resistive Sensor Short Barrel (with Qk. Disc.)*	All Models	OHSP-017	1-4†
NPN Magneto Resistive Sensor Short Barrel (with Qk. Disc.)*	All Models	OHSN-017	1-4†
PNP Magneto Resistive Sensor 90° Barrel (with Qk. Disc.)*	All Models	OHSP-011	1-4†
NPN Magneto Resistive Sensor 90° Barrel (with Qk. Disc.)*	All Models	OHSN-011	1-4†
PNP Inductive Sensor 3mm with Quick Disconnect*	All Models	OISP-019	1-2
NPN Inductive Sensor 3mm with Quick Disconnect.*	All Models	OISN-019	1-2
PNP Inductive Sensor 4mm with Quick Disconnect*	375M, 500M	OISP-014	1-2
NPN Inductive Sensor 4mm with Quick Disconnect*	375M, 500M	OISN-014	1-2
Quick Disconnect 2 Meter Cable Length*	All Models	CABL-010	1-4†
Quick Disconnect 5 Meter Cable Length*	All Models	CABL-013	1-4†

Pneumatic Accessories	Model Numbers	Part Number	Qty/Unit
Fail Safe Valve M5	All Models	OFSV-004	1
Adjustable Flow Control	All Models	VLVF-008	1-2

*Sensor and cable sold separately. †Except 250-1, 250-2, 1-2 only.

2-Jaw Heavy-Duty Parallel Grippers | Technical Specifications

Specifications	Units	250M-1	250M-2	375M-1	375-2
Total Rated Grip Force **F** @ 100 psi	N [lbs]	222 [50]		445 [100]	
Total Stroke	mm [in]	19.1 [0.75]	31.8 [1.25]	25.4 [1.00]	50.8 [2.00]
Weight	kg [lbs]	0.30 [0.66]	0.39 [0.86]	0.81 [1.80]	1.20 [2.66]
Pressure Range	bar [psi]	1.5-7 [20-100]			
Ingress Protection Class (IP)		IP66			
Displacement	cm^3 [in^3]	3.8 [0.023]	6.3 [0.383]	11.3 [0.690]	22.6 [1.382]
Temperature Range (Buna-N seals)	°C [°F]	-35°~80° [-30°~180°]			
Temperature Range (Viton® seals)	°C [°F]	-30°~150° [-20°~300°]			
Actuation	sec	0.12	0.14	0.16	0.20
Accuracy	mm [in]	±0.08 [±0.003]			
Repeatability	mm [in]	±0.03 [±0.001]			
Valve to Actuate Double Acting		4-way, 2-position			

Specifications	Units	500M-1	500M-2
Total Rated Grip Force **F** @ 100 psi	N [lbs]	800 [180]	
Total Stroke	mm [in]	38.1 [1.50	63.5 [2.50]
Weight	kg [lbs]	1.48 [3.27]	2.0 [4.39]
Pressure Range	bar [psi]	1.5-7 [20-100]	
Ingress Protection Class (IP)		IP66	
Displacement	cm^3 [in^3]	30.2 [1.841]	50.3 [3.068]
Temperature Range (Buna-N seals)	°C [°F]	-35°~80° [-30°~180°]	
Temperature Range (Viton® seals)	°C [°F]	-30°~150° [-20°~300°]	
Actuation	sec	0.20	0.28
Accuracy	mm [in]	±0.08 [±0.003]	
Repeatability	mm [in]	±0.03 [±0.001]	
Valve to Actuate Double Acting		4-way, 2-position	

DPW-250M

2-Jaw Heavy-Duty Parallel Grippers | Dimensions and Technical Specifications

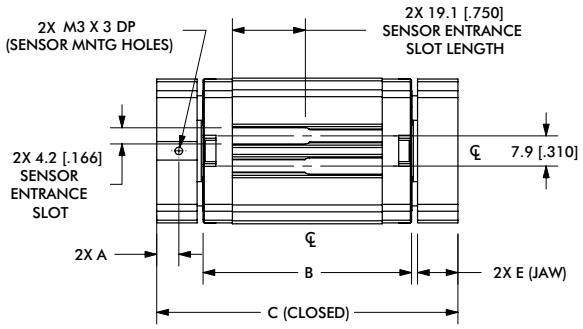

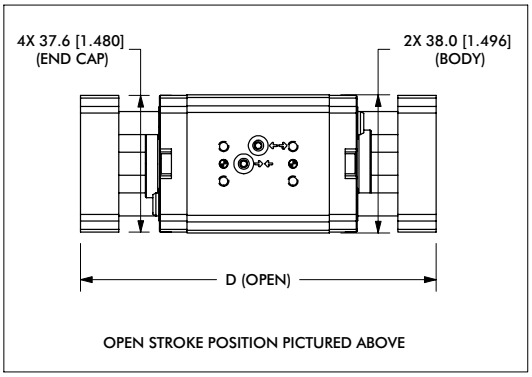

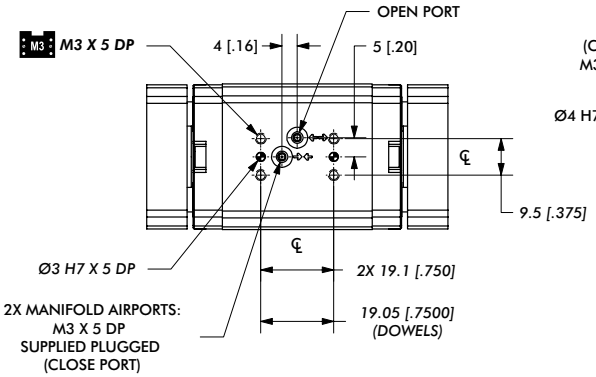

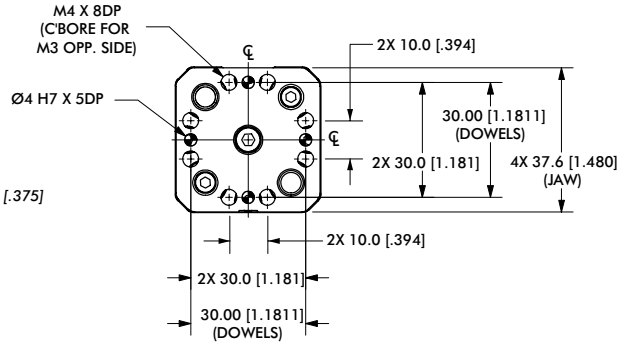

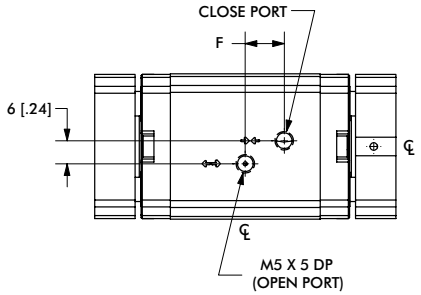

Sensor Accessories	250M
Inductive Sensor Mtg Kit (3mm or 4mm)	OSMK-116

Seal Repair Kits	250M
Buna-N Seal Repair Kit	SLKT-337
Viton® Seal Repair Kit	SLKT-337V
Viton® Manifold Seal Kit	SLKT-197V
Shaft Wiper Seal Kit	SLKT-338

Model	A	B	C	D	E	F
DPW-250M-1	5.8 [0.227]	54.4 [2.140]	79 [3.09]	98 [3.85]	10.5 [0.414]	10 [0.40]
DPW-250M-2	7.3 [0.289]	67.1 [2.640]	104 [4.09]	136 [5.35]	16.9 [0.664]	12 [0.47]

Loading Information

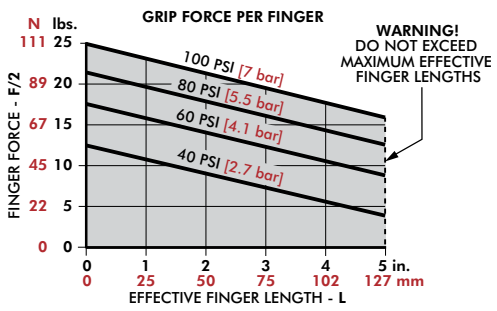

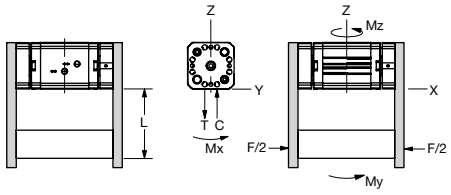

DPW-250M	Static	Dynamic
Maximum Tensile **T**	267 N [60 lbs]	53 N [12 lbs]
Maximum Compressive **C**	267 N [60 lbs]	53 N [12 lbs]
Maximum Moment M_x	14 Nm [120 in-lbs]	3 Nm [24 in-lbs]
Maximum Moment M_y	20 Nm [180 in-lbs]	4 Nm [36 in-lbs]
Maximum Moment M_z	14 Nm [120 in-lbs]	3 Nm [24 in-lbs]

†Capacities are per set of jaws and are not simultaneous

2-Jaw Heavy-Duty Parallel Grippers | Dimensions and Technical Specifications

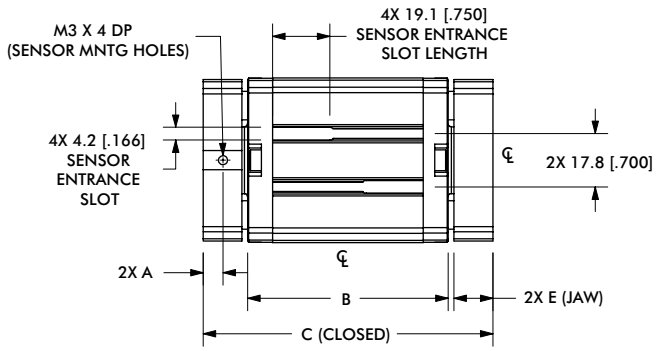

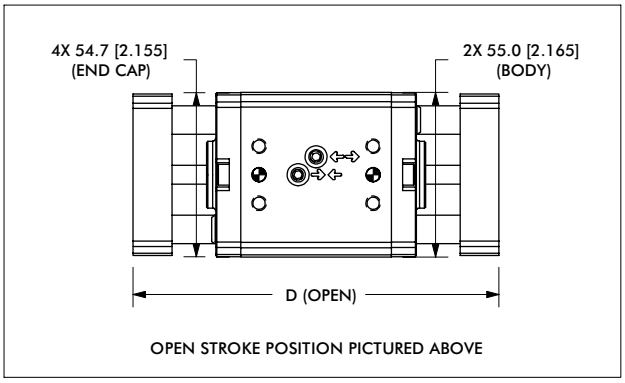

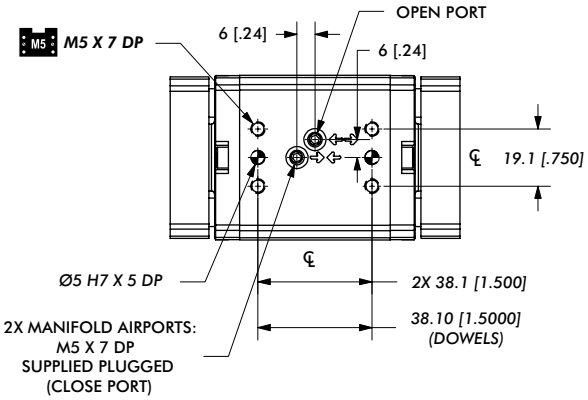

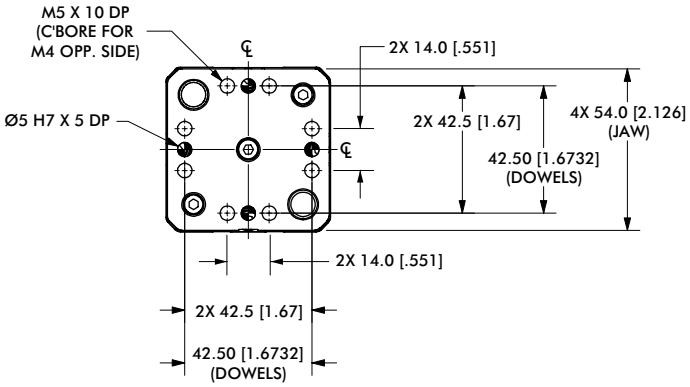

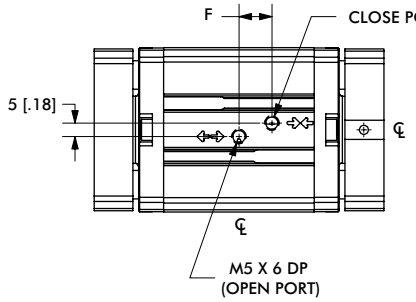

Model	A	B	C	D	E	F
DPW-375M-1	6.7 [0.262]	67.1 [2.640]	97 [3.81]	122 [4.81]	13.0 [0.512]	11 [0.43]
DPW-375M-2	11.7 [0.462]	92.5 [3.640]	147 [5.81]	198 [7.81]	25.7 [1.012]	12 [0.47]

Sensor Accessories	375M
Inductive Sensor Mtg Kit (3mm or 4mm)	OSMK-117

Seal Repair Kits	375M
Buna-N Seal Repair Kit	SLKT-339
Viton® Seal Repair Kit	SLKT-339V
Viton® Manifold Seal Kit	SLKT-199V
Shaft Wiper Seal Kit	SLKT-340

Loading Information

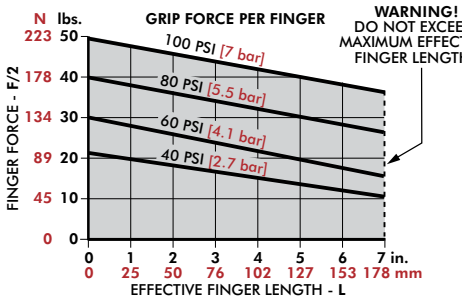

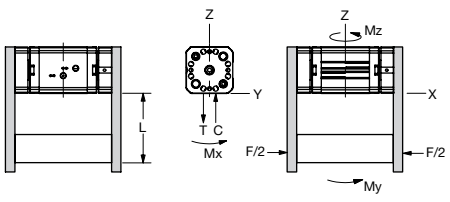

DPW-375M	Static	Dynamic
Maximum Tensile T	534 N [120 lbs]	107 N [24 lbs]
Maximum Compressive C	534 N [120 lbs]	107 N [24 lbs]
Maximum Moment M_x	24 Nm [210 in-lbs]	5 Nm [42 in-lbs]
Maximum Moment M_y	34 Nm [300 in-lbs]	7 Nm [60 in-lbs]
Maximum Moment M_z	24 Nm [210 in-lbs]	5 Nm [42 in-lbs]

†Capacities are per set of jaws and are not simultaneous

DPW-500M

2-Jaw Heavy-Duty Parallel Grippers | Dimensions and Technical Specifications

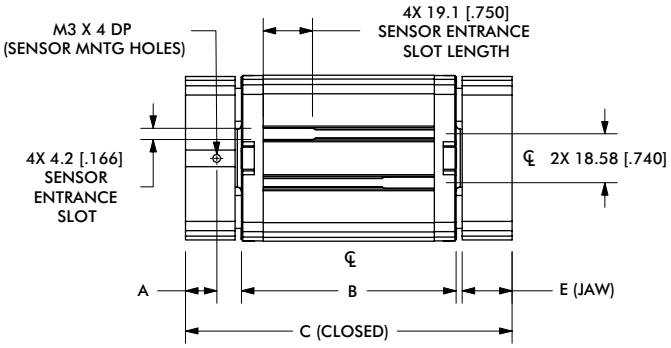

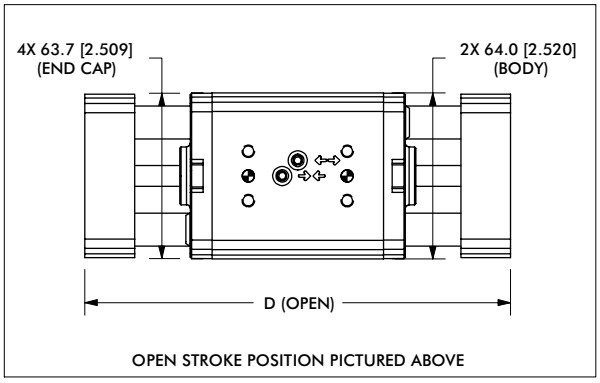

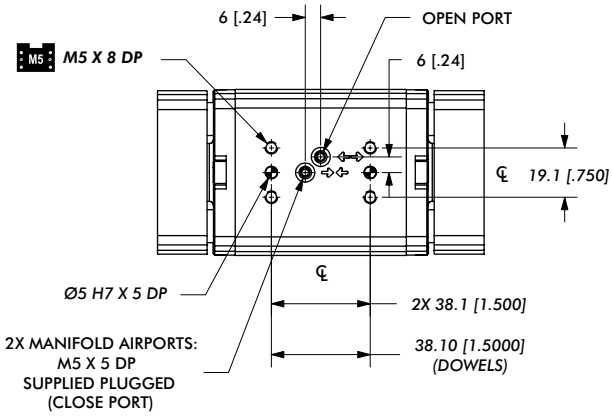

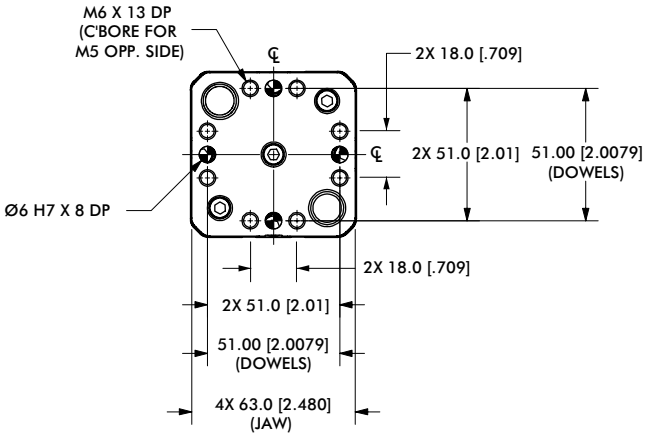

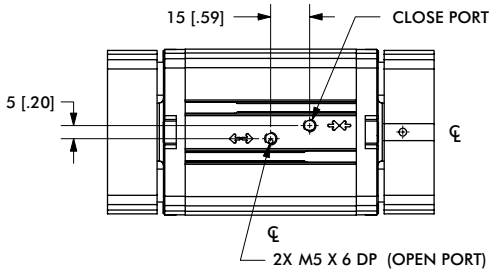

Model	A	B	C	D	E
DPW-500M-1	12.1 [0.475]	82.8 [3.260]	125 [4.96]	164 [6.46]	19.2 [0.755]
DPW-500M-2	14.9 [0.585]	108.2 [4.260]	177 [6.96]	240 [9.46]	31.9 [1.255]

Sensor Accessories	500M
Inductive Sensor Mtg Kit (3mm or 4mm)	OSMK-118

Seal Repair Kits	500M
Buna-N Seal Repair Kit	SLKT-341
Viton® Seal Repair Kit	SLKT-341V
Viton® Manifold Seal Kit	SLKT-199V
Shaft Wiper Seal Kit	SLKT-342

Loading Information

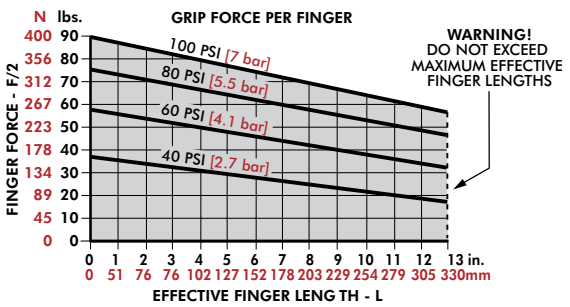

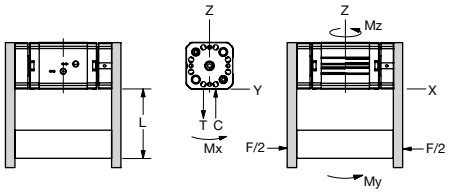

DPW-500M	Static	Dynamic
Maximum Tensile **T**	2668 N [600 lbs]	267 N [60 lbs]
Maximum Compressive **C**	2668 N [600 lbs]	267 N [60 lbs]
Maximum Moment M_x	68 Nm [600 in-lbs]	7 Nm [60 in-lbs]
Maximum Moment M_y	102 Nm [900 in-lbs]	10 Nm [90 in-lbs]
Maximum Moment M_z	68 Nm [600 in-lbs]	7 Nm [60 in-lbs]

†Capacities are per set of jaws and are not simultaneous

Dimensions and technical information are subject to change without notice

Notes

RPB SERIES

2-Jaw Heavy-Duty Parallel Grippers | Features and Benefits | How to Order

Features:

- High accuracy, sealed, low friction roller bearing, long stroke gripper
- Grip force of 2669N with strokes from 101 mm [3.98 in] to 203 mm [7.99 in] (maintains full grip force even at long finger lengths)
- Rack and pinion design for high repeatability
- Purge ports maintain long term smooth operation in harsh environments.
- Viton® seals for extended temperature operating range.
- Optional non-synchronous jaw operation
- Part sensing using up to 4 inductive sensors



Applications:

- Foundry applications
- Gantry systems
- Large heavy part handling
- Long finger lengths

RPB Series How To Order

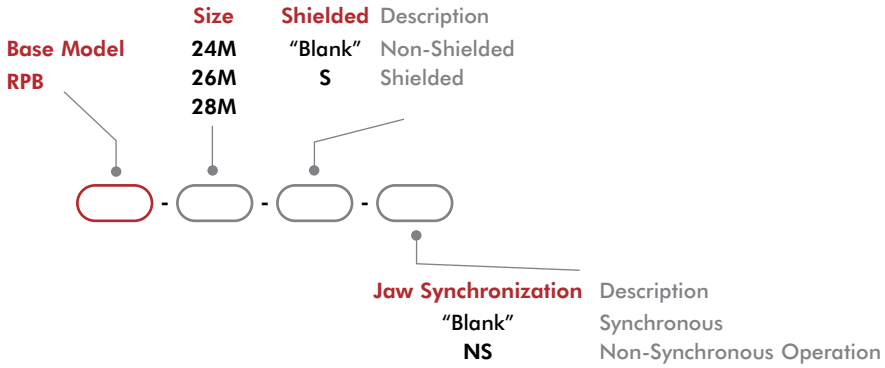

RPB Series Accessories

Sensor Accessories	Model Numbers	Part Number	Qty/Unit
12mm Sensor Mounting Kit (mounts 2 sensors)	24, 26, 28	OSMK-078	1-2
12mm Sensor Mounting Kit (mounts 2 sensors)	24-S, 26-S, 28-S	OSMK-079	1-2
12mm PNP Inductive Sensor with Quick Disconnect*	All Models	OISP-017	1-4
12mm NPN Inductive Sensor with Quick Disconnect*	All Models	OISN-017	1-4
Quick Disconnect 2 Meter Cable Length*	All Models	CABL-014	1-4

Pneumatic Accessories	Model Numbers	Part Number	Qty/Unit
Fail Safe Valve (Metric)	All Models	OFSV-006	1

*Sensor and cable sold separately.

2-Jaw Heavy-Duty Parallel Grippers | Technical Specifications

Specifications	Units	24M, 24M-S	26M, 26M-S	28M, 28M-S
Total Rated Grip Force **F** @ 100 psi [7 bar]	N [lbs]	2669 [600]		
Total Stroke	mm [in]	101.6 [4]	152.4 [6]	203.2 [8]
Weight	kg [lbs]	10.9 [24]	14.5 [32]	19.1 [42]
Pressure Range	bar [psi]	1.4-7 [20-100]		
Cylinder Bore Ø	mm [in]	50.8 [2.000]		
Displacement	cm^3 [in^3]	204.8 [12.5]	308.1 [18.8]	410 [25]
Temperature Range (Viton® seals)	°C [°F]	-30°~150° [-20°~300°]		
Actuation	sec	0.5	0.75	1.00
Accuracy	mm [in]	±0.13 [±0.005]		
Repeatability	mm[in]	±0.05 [±0.0020]		
Valve to Actuate Double Acting		4-way, 2-position		

RPB-24M, -26M, -28M

2-Jaw Heavy-Duty Parallel Grippers | Dimensions and Technical Specifications

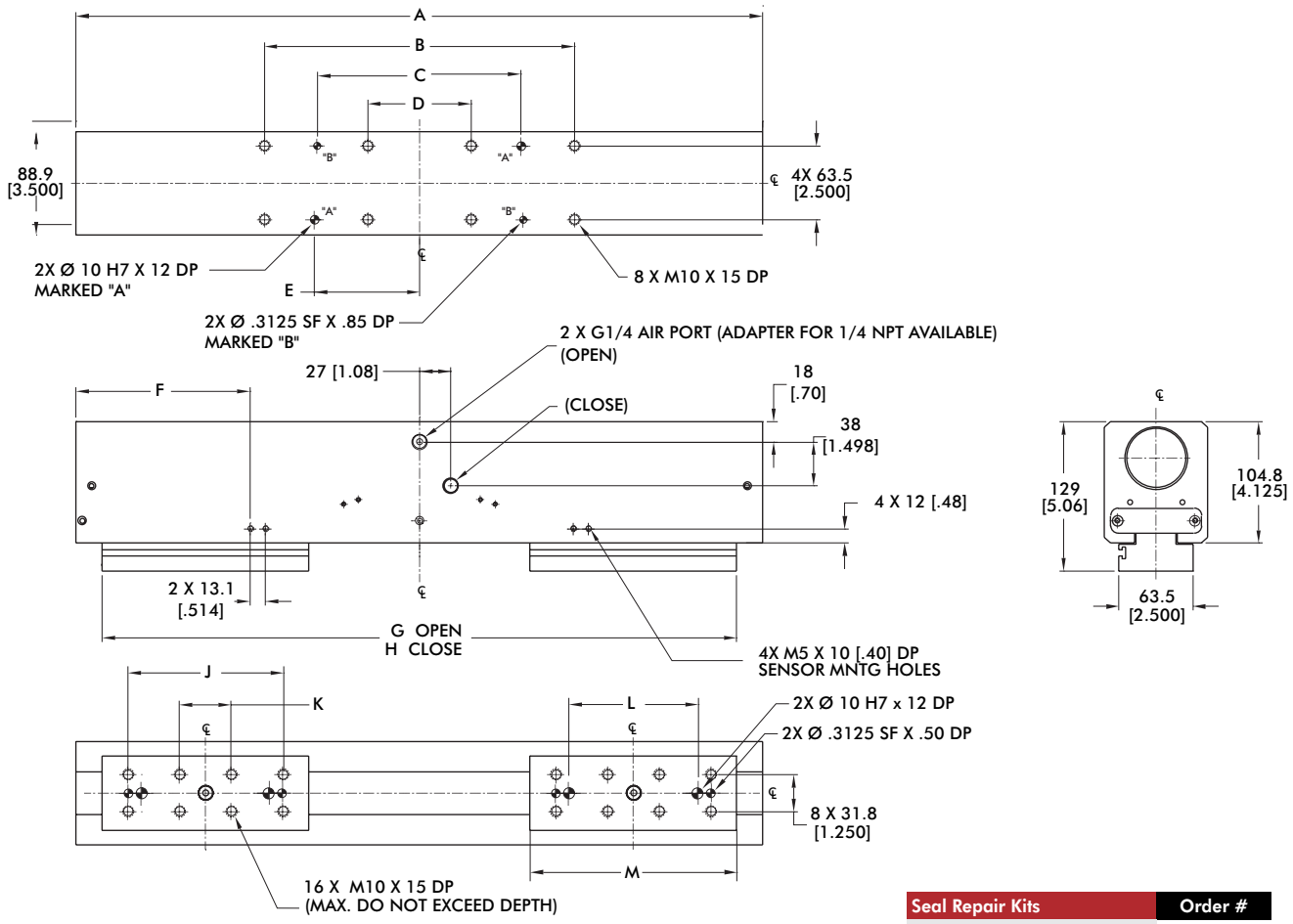

Seal Repair Kits	Order #
Viton® Seal Repair Kit	SLKT-123V

Model	A	B	C	D	E	F	G	H	J	K	L	M
RPB-24M	438.2 [17.250]	152.4 [6.000]	101.6 [4.000]	50.8 [2.000]	50.8 [2.000]	98.9 [3.90]	394 [15.50]	292 [11.50]	101.6 [4.000]	38.1 [1.500]	82.0 [3.2284]	127.0 [5.000]
RPB-26M	590.5 [23.250]	266.7 [10.500]	177.8 [7.000]	88.9 [3.500]	88.9 [3.500]	150 [5.90]	546 [21.50]	394 [15.50]	133.4 [5.250]	44.5 [1.750]	112.0 [1.4094]	178 [7.00]
RPB-28M	743.0 [29.250]	381.0 [15.000]	254.0 [10.000]	127.0 [5.000]	127.0 [5.000]	188 [7.39]	699 [27.50]	495 [19.50]	165.1 [6.500]	50.8 [2.000]	140.0 [5.5118]	229 [9.00]

Loading Information

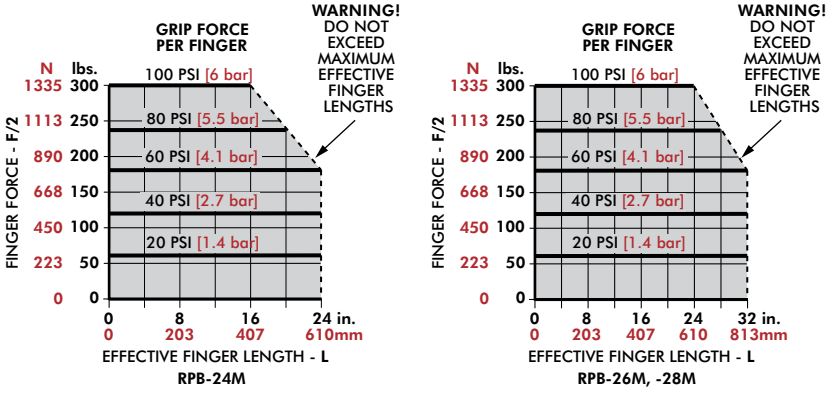

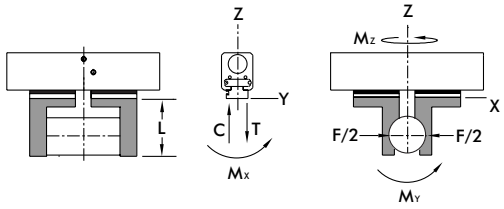

Static Load	-24M	-26M, -28M
Maximum Tensile **T**	6672 N [1500 lbs]	8896 N [2000 lbs]
Maximum Compressive **C**	6672 N [1500 lbs]	8896 N [2000 lbs]
Maximum Moment M_x	339 Nm [3000 in-lbs]	396 Nm [3500 in-lbs]
Maximum Moment M_y	339 Nm [3000 in-lbs]	396 Nm [3500 in-lbs]
Maximum Moment M_z	339 Nm [3000 in-lbs]	396 Nm [3500 in-lbs]

†Capacities are per set of jaws and are not simultaneous

Dimensions and technical information are subject to change without notice

RPB-24M-S, -26M-S, -28M-S

2-Jaw Heavy-Duty Parallel Grippers | Dimensions and Technical Specifications

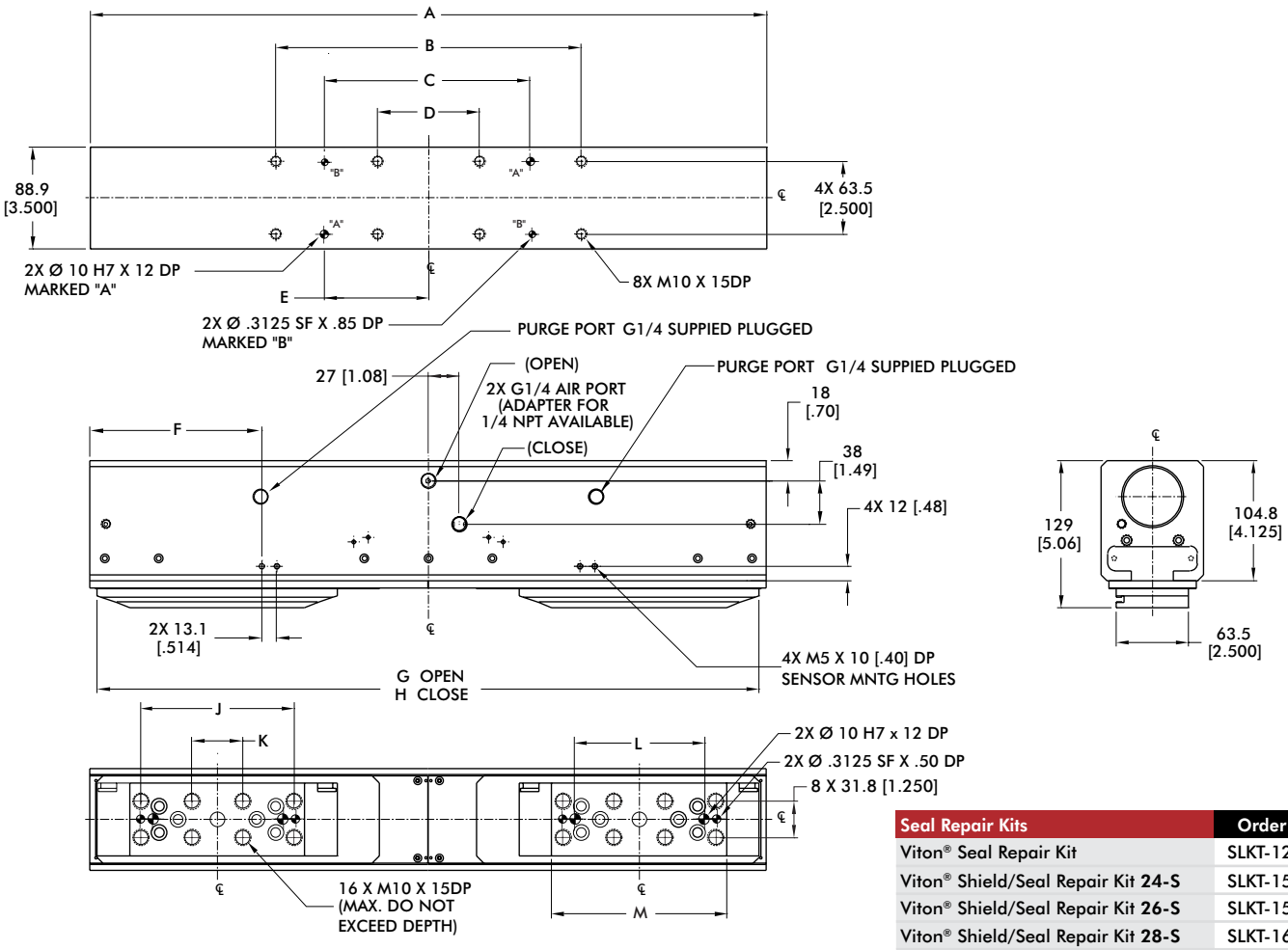

Seal Repair Kits	Order #
Viton® Seal Repair Kit	SLKT-123V
Viton® Shield/Seal Repair Kit **24-S**	SLKT-152V
Viton® Shield/Seal Repair Kit **26-S**	SLKT-153V
Viton® Shield/Seal Repair Kit **28-S**	SLKT-166V

Model	A	B	C	D	E	F	G	H	J	K	L	M
RPB-24M-S	438.2 [17.250]	152.4 [6.000]	101.6 [4.000]	50.8 [2.000]	50.8 [2.000]	98.9 [3.90]	427 [16.82]	325 [12.79]	101.6 [4.000]	38.1 [1.500]	82.0 [3.2284]	124 [4.88]
RPB-26M-S	590.5 [23.250]	266.7 [10.500]	177.8 [7.000]	88.9 [3.500]	88.9 [3.500]	150 [5.90]	578 [22.75]	425 [16.75]	133.4 [5.250]	44.5 [1.750]	112.0 [1.4094]	153 [6.03]
RPB-28M-S	743.0 [29.250]	381.0 [15.000]	254.0 [10.000]	127.0 [5.000]	127.0 [5.000]	188 [7.39]	724 [28.50]	521 [20.50]	165.1 [6.500]	50.8 [2.000]	140.0 [5.5118]	197 [7.77]

Loading Information

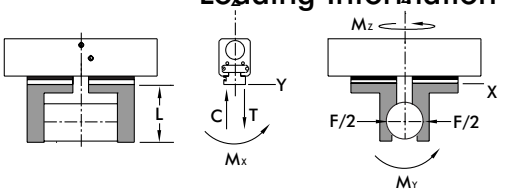

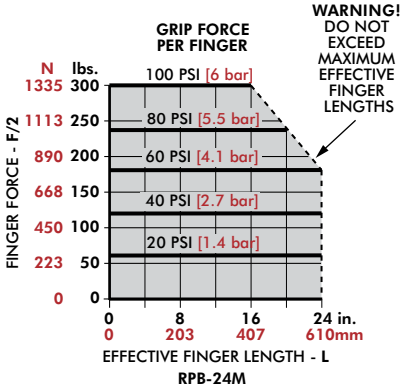

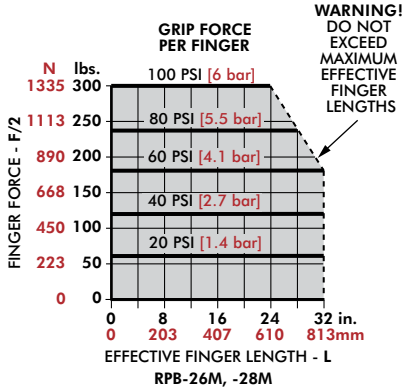

Static Load	-24M	-26M, -28M
Maximum Tensile **T**	6672 N [1500 lbs]	8896 N [2000 lbs]
Maximum Compressive **C**	6672 N [1500 lbs]	8896 N [2000 lbs]
Maximum Moment M_x	339 Nm [3000 in-lbs]	396 Nm [3500 in-lbs]
Maximum Moment M_y	339 Nm [3000 in-lbs]	396 Nm [3500 in-lbs]
Maximum Moment M_z	339 Nm [3000 in-lbs]	396 Nm [3500 in-lbs]

†Capacities are per set of jaws and are not simultaneous

RPR SERIES

2-Jaw Heavy-Duty Parallel Grippers | Features and Benefits | How To Order

Features:

- High rigidity and robust long stroke gripper
- Grip force of 4559N with strokes from 150 mm [5.91 in] to 350 mm [13.78 in]
- Rack and Pinion for synchronized jaw operation
- Optional Integral Rod Lock that lock jaws in position upon air loss
- Shaft wiper seals protects internal bearings from contaminants
- Optional Viton® seals for high temp applications
- Customized sensing and linear encoder solutions available

RPR-63M-200



(USB key shown for scale)

Applications:

- Foundry applications
- Gantry Systems
- Large heavy part handling

How To Order

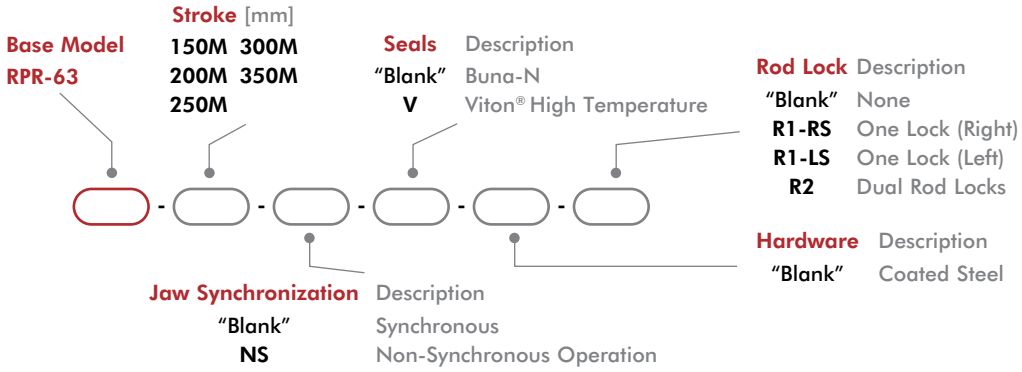

Accessories

Sensor Accessories	Part Number	Qty/Unit
Sensor Mounting Kit for Imperial & Metric Units (mounts 2 sensors)	OSMK-131	1
12mm PNP Inductive Sensor with Quick Disconnect*	OISP-017	1-2
12mm NPN Inductive Sensor with Quick Disconnect*	OISN-017	1-2
Quick Disconnect 2 Meter Cable Length*	CABL-014	1-2
Quick Disconnect 5 Meter Cable Length*	CABL-018	1-2

Pneumatic Accessories	Part Number	Qty/Unit
Fail Safe Valve 1/4 BSPP	OFSV-006	1
Buna-N Seal Repair Kit	SLKT-452	1
Viton® Seal Repair Kit	SLKT-453	1

*Sensor and cable sold separately.

RPR-63-200

2-Jaw Heavy-Duty Parallel Grippers | Technical Specifications

Specifications	Units	RPR-63-150	RPR-63-200	RPR-63-250	RPR-63-300	RPR-63-350
Total Rated Grip Force **F** @ 100 psi	N [lbs]	3250 [800]				
Total Stroke	mm [in]	150 [5.91]	200 [7.87]	250 [9.84]	300 [11.81]	350 [13.78]
Weight	kg [lbs]	13.6 [30]	15.8 [35]	18.1 [40]	20.4 [45]	22.7 [50]
Ingress Protection Class (IP)		IP65				
Pressure Range	bar [psi]	3-7 [40-100]				
Displacement	cm^3 [in^3]	623 [38.2]				
Temperature Range (Buna-N seals)	°C [°F]	-35°~80° [-30°~180°]				
Temperature Range (Viton® seals)	°C [°F]	-30°~150° [-20°~300]				
Actuation	sec	1.0	1.3	1.6	1.8	2.0
Accuracy	mm [in]	±0.13 [±0.005]				
Repeatability	mm [in]	±0.05 [±0.002]				
Valve to Actuate Double Acting		4-way, 2-position				

RPR SERIES

2-Jaw Heavy-Duty Parallel Grippers | Dimensions and Technical Specifications

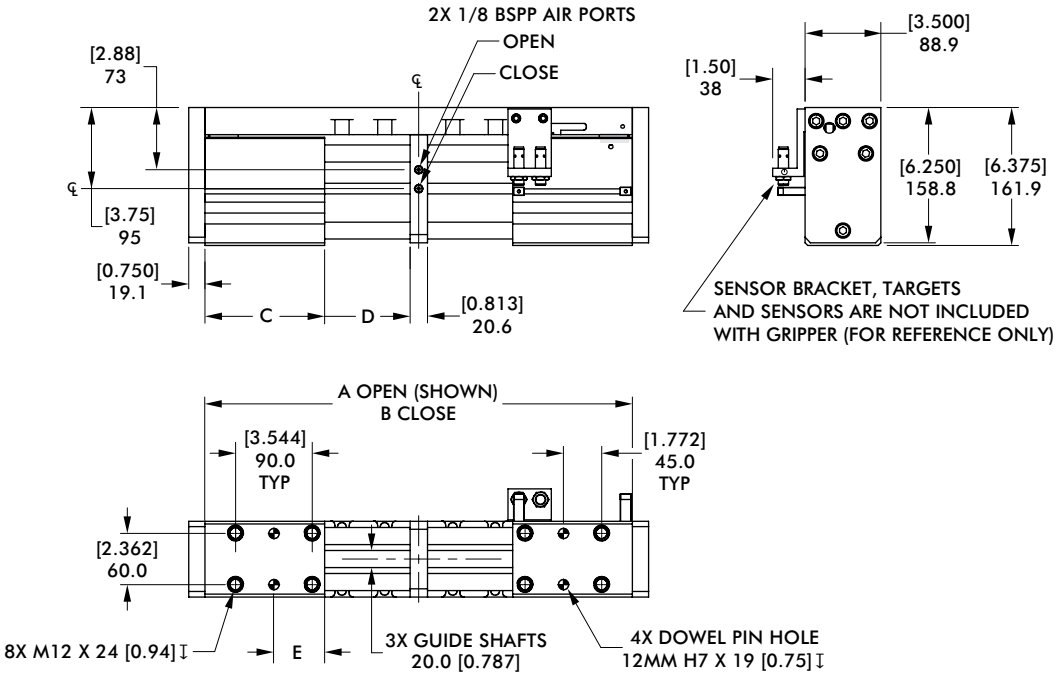

RPR-63-250 SHOWN

Model	A	B	C	D	E
RPR-63-150	[12.27] 311.6	[6.34] 161.1	[5.51] 140	[2.96] 75.3	[2.34] 59.6
RPR-63-200	[19.75] 501.7	[11.87] 301.6		[3.94] 100	
RPR-63-250	[23.81] 604.7	[13.96] 354.7	[6.58] 167	[4.92] 125	
RPR-63-300	[28.15] 715	[16.21] 411.8	[7.70] 195.6	[5.97] 151.6	[3.50] 88.8
RPR-63-350	[31.75] 806.5	[17.71] 449.9	[8.45] 214.6	[7.02] 178.3	[4.25] 107.6

Loading Information

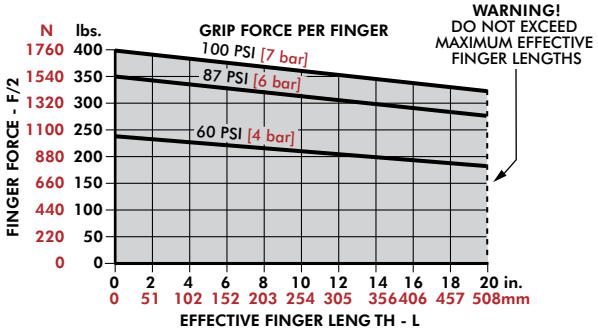

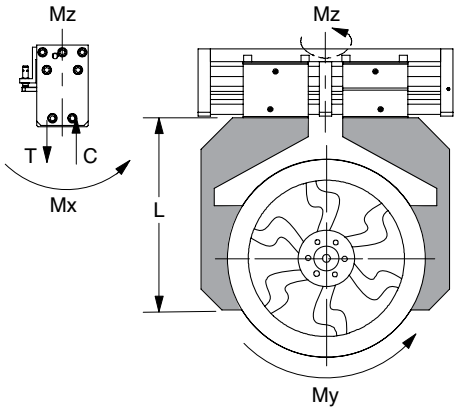

RPR-63M	
Maximum Tensile **T**	15570 N [3500 lbs]
Maximum Compressive **C**	15570 N [3500 lbs]
Maximum Moment M_x	825 Nm [7500 in-lbs]
Maximum Moment M_y	990 N [9000 lbs]
Maximum Moment M_x	825 Nm[7500 in-lbs]
Maximum Finger Length **L**	500mm [20 in]

†Capacities are per set of jaws and are not simultaneous

2-Jaw Heavy-Duty Parallel Grippers | Dimensions

RPR-63-150

(COMMON DIMENSION FOR ALL SIZES SHOWN)

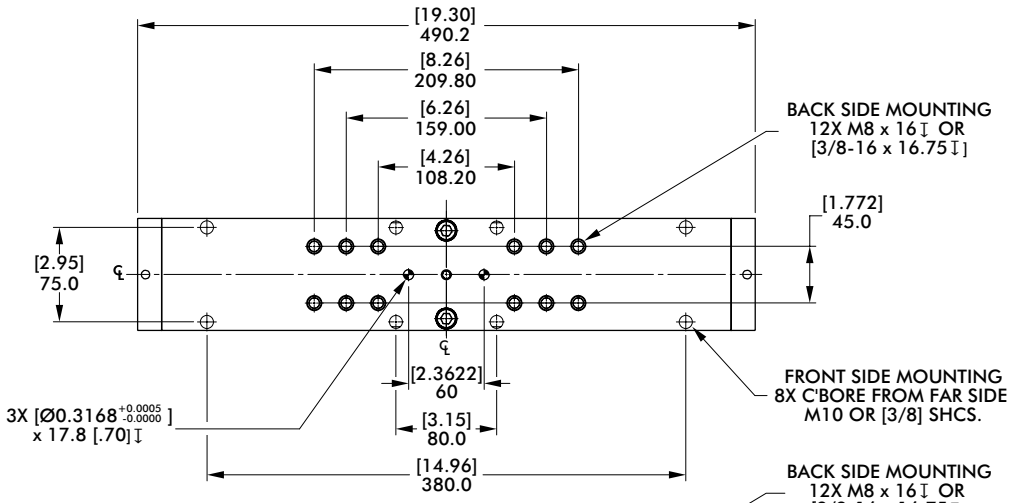

RPR-63-200

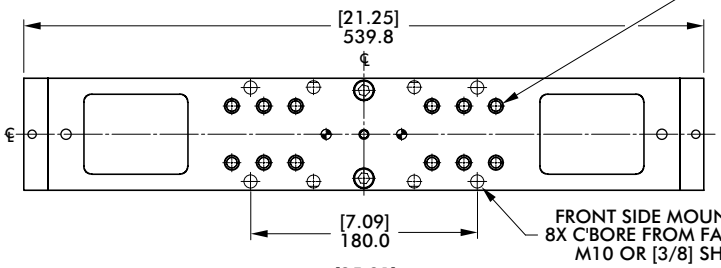

RPR-63-250

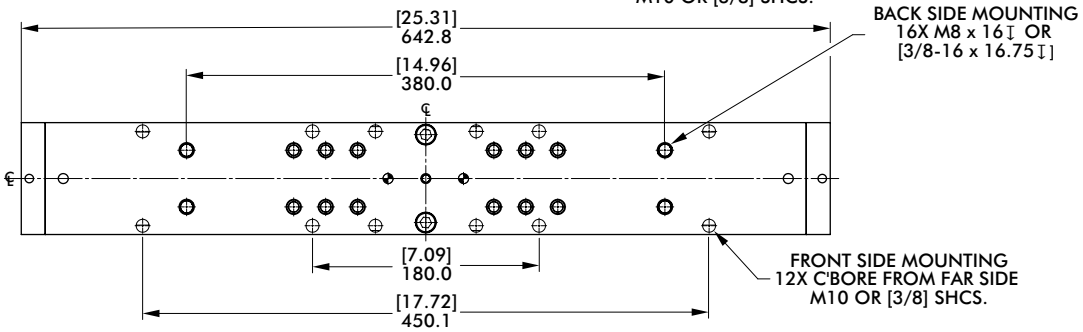

RPR-63-300

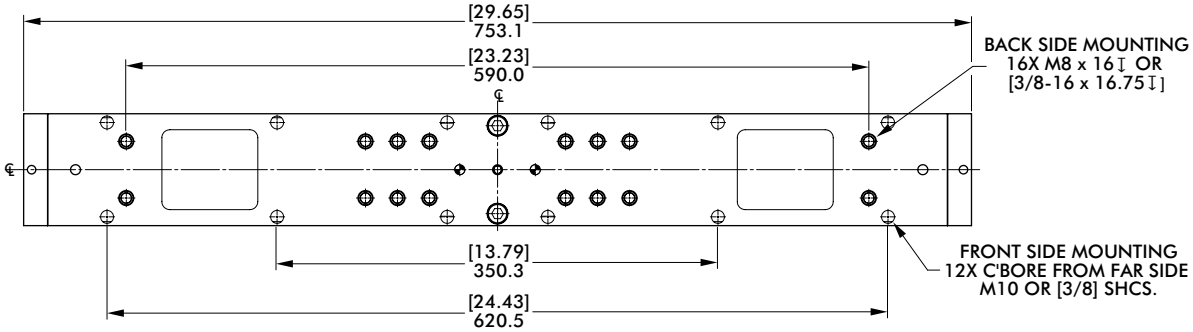

RPR-63-350

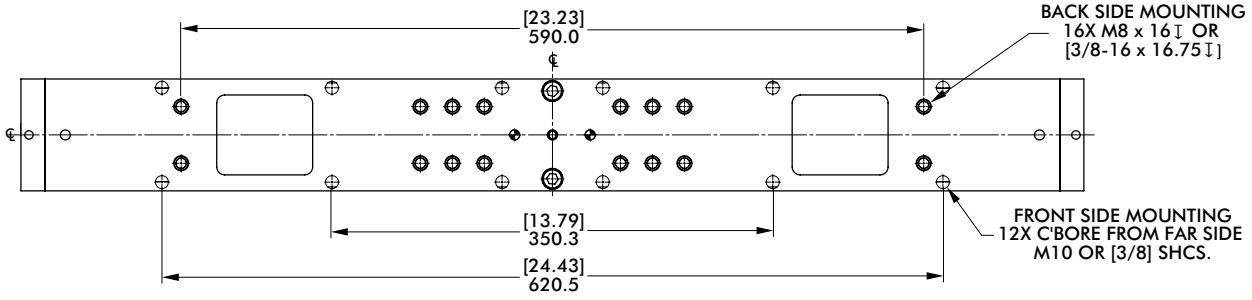

RPW SERIES

2-Jaw Heavy-Duty Parallel Grippers | Features and Benefits | How To Order

Features:

- Robust wide body gripper
- Grip force ranges from 222N thru 2091N
- Strokes range from 19mm thru 114mm
- Rack and pinion design for smooth operation
- Jaws well supported to grip large and wide parts
- Double rod seals for extended life in harsh environments
- Optional non-synchronous jaw operation



Applications:

- Wide part gripping
- Gantry systems
- Harsh gripping environment

How To Order

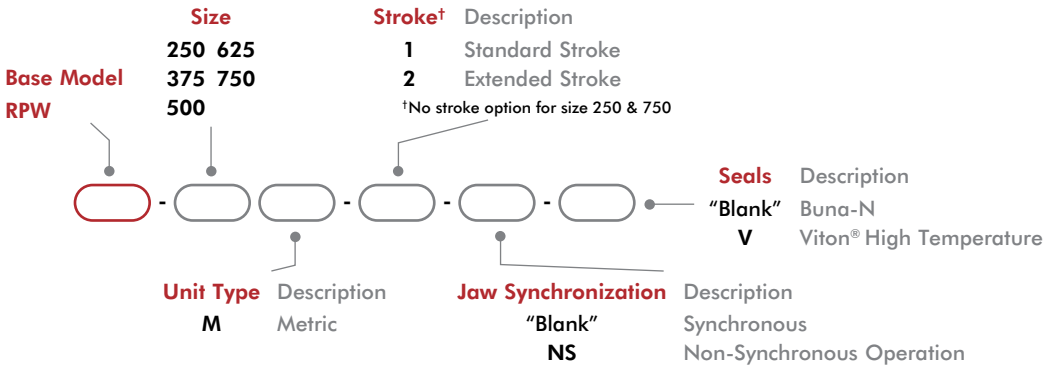

Accessories

Sensor Accessories	Model Numbers	Part Number	Qty/Unit
Sensor Mounting Kit for Imperial & Metric Units (mounts 2 sensors)	See Datasheet		1
PNP Inductive Sensor with Quick Disconnect*	250, 375, 500	OISP-014	1-2
NPN Inductive Sensor with Quick Disconnect*	250, 375, 500	OISN-014	1-2
PNP Inductive Sensor with Quick Disconnect*	625, 750	OISP-011	1-2
NPN Inductive Sensor with Quick Disconnect*	625, 750	OISN-011	1-2
Quick Disconnect 2 Meter Cable Length*	All Models	CABL-010	1-2
Quick Disconnect 5 Meter Cable Length*	All Models	CABL-013	1-2

Pneumatic Accessories	Model Numbers	Part Number	Qty/Unit
Fail Safe Valve (Imperial)	250, 375	OFSV-001	1
Fail Safe Valve (Metric)	250, 375	OFSV-004	1
Fail Safe Valve (Imperial)	500, 625, 750	OFSV-002	1
Fail Safe Valve (Metric)	500, 625, 750	OFSV-005	1

*Sensor and cable sold separately.

2-Jaw Heavy-Duty Parallel Grippers | Technical Specifications

Specifications	Units	250	375-1	375M-2
Total Rated Grip Force **F** @ 100 psi	N [lbs]	222 [50]	400 [90]	
Total Stroke	mm [in]	19.1 [0.75]	25.4 [1.00]	50.8 [2.00]
Weight	kg [lbs]	0.30 [0.66]	0.59 [1.3]	0.91 [2.0]
Pressure Range	bar [psi]	3-7 [40-100]		
Ingress Protection Class (IP)		IP54		
Displacement	cm^3 [in^3]	3.8 [0.023]	9.8 [0.600]	19.7 [1.200]
Temperature Range (Buna-N seals)	°C [°F]	-35°~80° [-30°~180°]		
Temperature Range (Viton® seals)	°C [°F]	-30°~150° [-20°~300°]		
Actuation	sec	0.16	0.20	0.25
Accuracy	mm [in]	±0.05 [±0.002]		
Repeatability	mm [in]	±0.03 [±0.001]		
Valve to Actuate Double Acting		4-way, 2-position		

Specifications	Units	500-1	500-2
Total Rated Grip Force **F** @ 100 psi	N [lbs]	667 [150]	
Total Stroke	mm [in]	38.1 [1.50]	63.5 [2.50]
Weight	kg [lbs]	1.4 [3.0]	1.85 [4.0]
Pressure Range	bar [psi]	3-7 [40-100]	
Ingress Protection Class (IP)		IP54	
Displacement	cm^3 [in^3]	29.5 [1.800]	49.2 [3.000]
Temperature Range (Buna-N seals)	°C [°F]	-35°~80° [-30°~180°]	
Temperature Range (Viton® seals)	°C [°F]	-30°~150° [-20°~300°]	
Actuation	sec	0.25	0.33
Accuracy	mm [in]	±0.08 [±0.003]	
Repeatability	mm [in]	±0.03 [±0.001]	
Valve to Actuate Double Acting		4-way, 2-position	

Specifications	Units	625-1	625-2	750
Total Rated Grip Force **F** @ 100 psi	N [lbs]	1068 [240]		2091 [470]
Total Stroke	mm [in]	50.8 [2.00]	88.9 [3.50]	114.3 [4.50]
Weight	kg [lbs]	3.0 [6.5]	3.6 [7.8]	6.4 [14]
Pressure Range	bar [psi]	3-7 [40-100]		
Ingress Protection Class (IP)		IP54		
Displacement	cm^3 [in^3]	21.6 [1.320]	37.9 [2.310]	232.7 [14.200]
Temperature Range (Buna-N seals)	°C [°F]	-35°~80° [-30°~180°]		
Temperature Range (Viton® seals)	°C [°F]	-30°~150° [-20°~300°]		
Actuation	sec	0.52	0.69	1.00
Accuracy	mm [in]	±0.08 [±0.003]		
Repeatability	mm [in]	±0.03 [±0.001]		
Valve to Actuate Double Acting		4-way, 2-position		

RPW-250M

2-Jaw Heavy-Duty Parallel Grippers | Dimensions and Technical Specifications

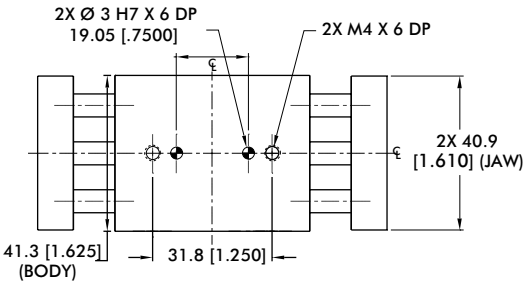

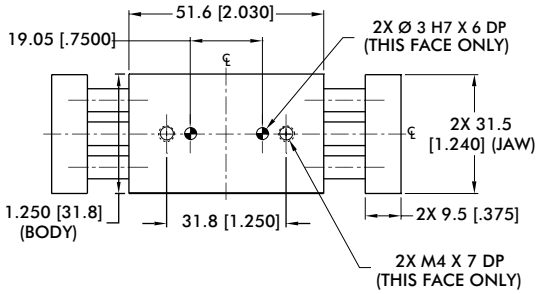

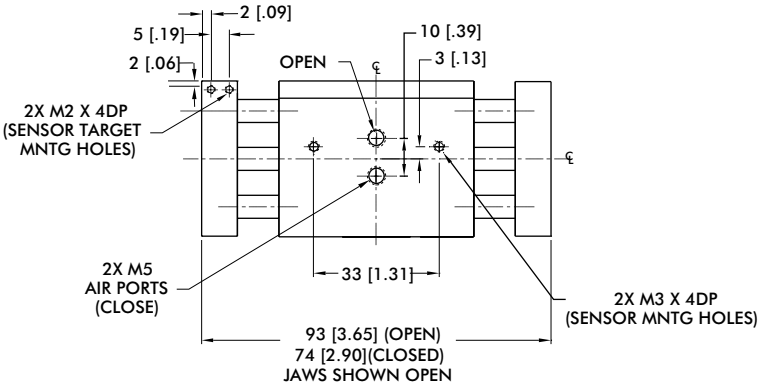

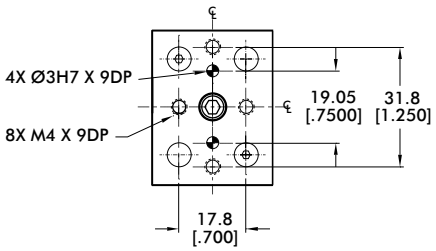

Sensor Accessories	250
Inductive Sensor Mtg Kit (2 Sensors)	OSMK-009

Seal Repair Kits	250
Buna-N Seal Repair Kit	SLKT-055
Viton® Seal Repair Kit	SLKT-055V

Loading Information

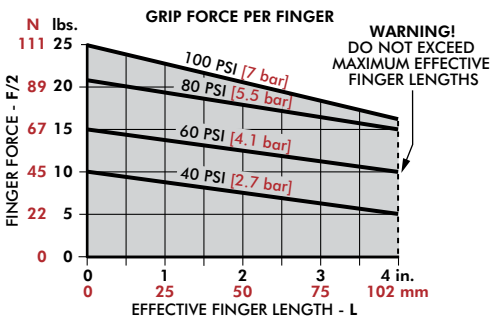

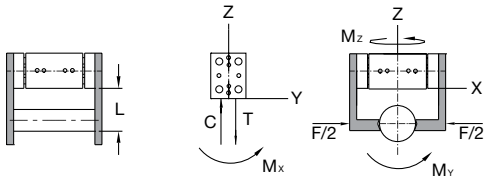

RPW-250M	Static	Dynamic
Maximum Tensile **T**	[50 lb] 222 N	[10 lb] 44 N
Maximum Compressive **C**	[50 lb] 222 N	[10 lb] 44 N
Maximum Moment M_x	[100 in-lb] 11 Nm	[20 in-lb] 2 Nm
Maximum Moment M_y	[150 in-lb] 17 Nm	[30 in-lb] 3 Nm
Maximum Moment M_z	[100 in-lb] 11 Nm	[20 in-lb] 2 Nm

†Capacities are per set of jaws and are not simultaneous

Dimensions and technical information are subject to change without notice

2-Jaw Heavy-Duty Parallel Grippers | Dimensions and Technical Specifications

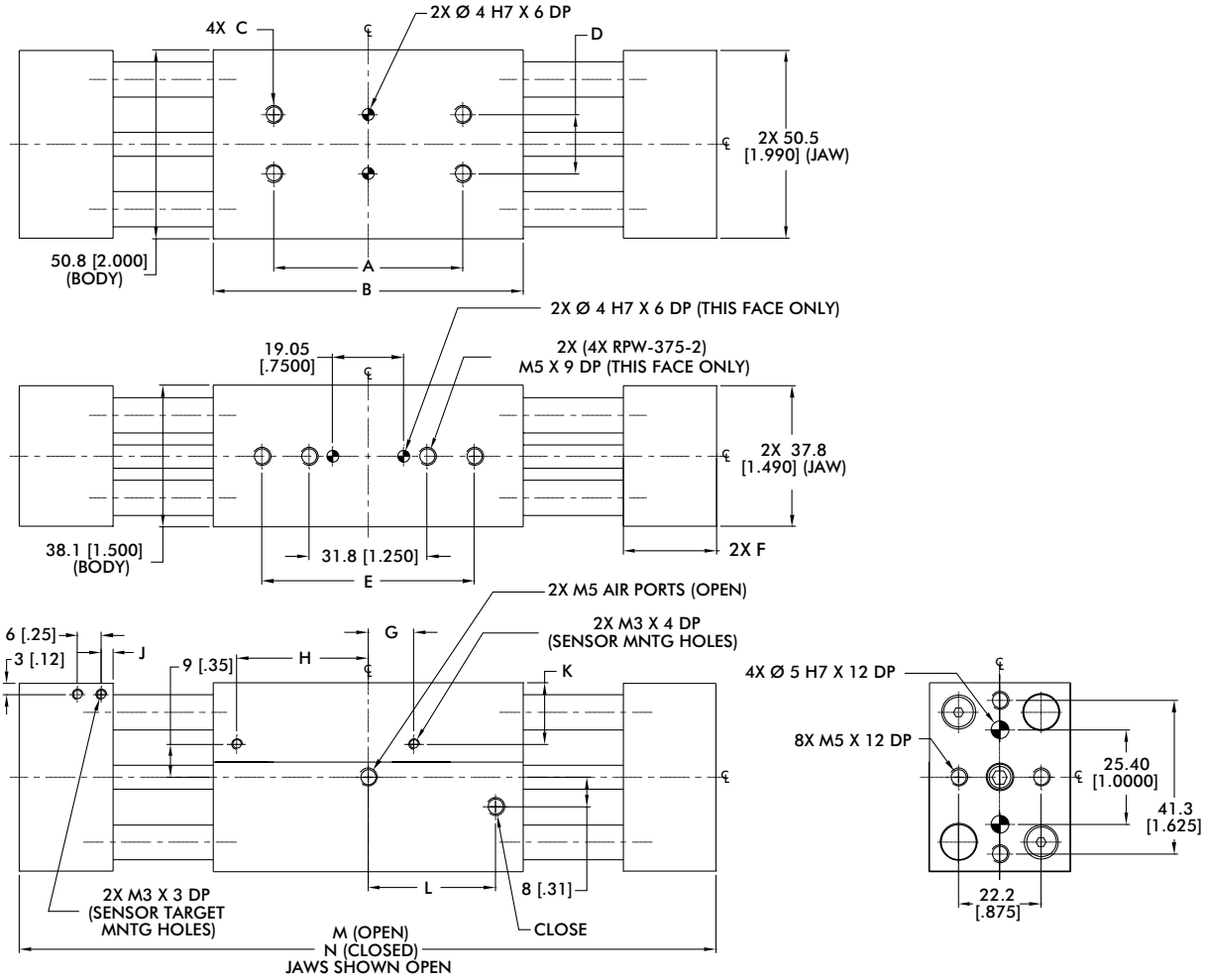

Sensor Accessories	375
Inductive Sensor Mtg Kit for **375-1** (2 Sensors)	OSMK-010
Inductive Sensor Mtg Kit for **375-2** (2 Sensors)	OSMK-011

Seal Repair Kits	375
Buna-N Seal Repair Kit	SLKT-056
Viton® Seal Repair Kit	SLKT-056V

Model	A	B	C	D	E	F	G	H	J	K	L	M	N
RPW-375M-1	19.05 [0.7500]	19.0 [0.750]	M4 x 6 DP [#8-32 x.25 DP]	19.05 [0.7500]	--	18.8 [0.740]	13 [0.52]	22 [0.85]	3 [0.12]	9 [0.35]	21 [0.81]	120 [4.74]	95 [3.74]
RPW-375M-2	50.8 [2.000]	83.3 [3.280]	M5 x 6 DP [#10-32 x.25 DP]	15.88 [0.6250]	57.2 [2.250]	25.1 [0.990]	12 [0.49]	35 [1.39]	3 [0.13]	17 [0.65]	34 [1.35]	187 [7.38]	136 [5.38]

Loading Information

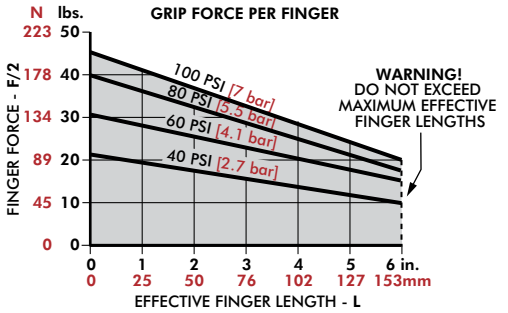

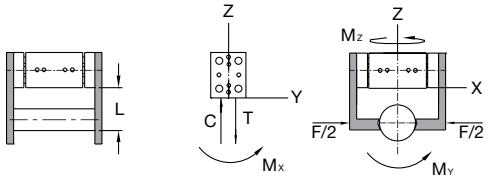

RPW-375M	Static	Dynamic
Maximum Tensile **T**	[100 lb] 445 N	[20 lb] 89 N
Maximum Compressive **C**	[100 lb] 445 N	[20 lb] 89 N
Maximum Moment M_x	[175 in-lb] 20 Nm	[35 in-lb] 4 Nm
Maximum Moment M_y	[250 in-lb] 28 Nm	[50 in-lb] 6 Nm
Maximum Moment M_z	[175 in-lb] 20 Nm	[35 in-lb] 4 Nm

†Capacities are per set of jaws and are not simultaneous

RPW-500M

2-Jaw Heavy-Duty Parallel Grippers | Dimensions and Technical Specifications

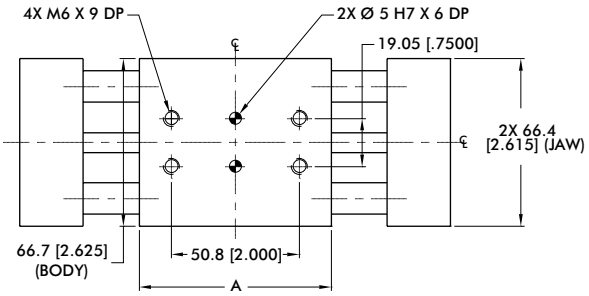

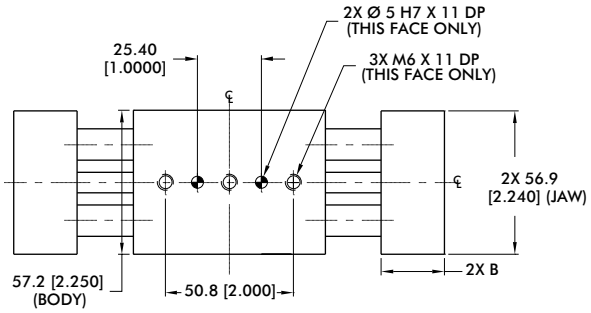

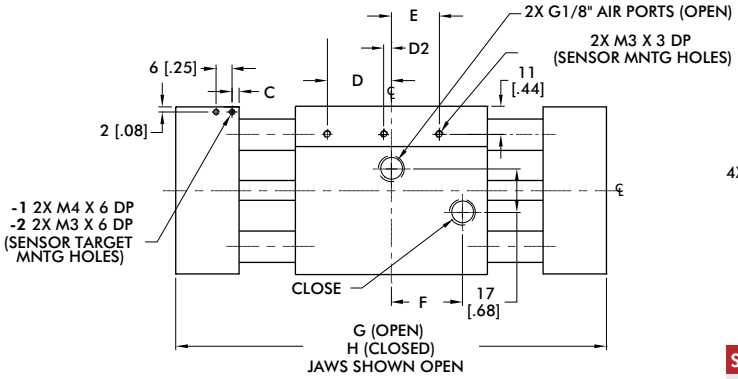

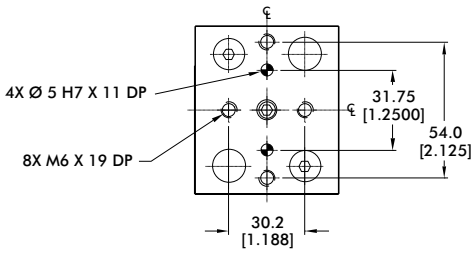

Sensor Accessories	500
Inductive Sensor Mtg Kit for **500-1** (2 Sensors)	OSMK-012
Inductive Sensor Mtg Kit for **500-2** (2 Sensors)	OSMK-013

Seal Repair Kits	500
Buna-N Seal Repair Kit	SLKT-058
Viton® Seal Repair Kit	SLKT-058V

Model	A	B	C	D	D2	E	F	G	H
RPW-500M-1	76.2 [3.000]	25.1 [.990]	2.8 [.11]	25 [1.00]	--	19 [0.75]	28 [1.11]	171 [6.73]	132 [5.23]
RPW-500M-2	101.6 [4.000]	31.3 [1.235]	3.3 [.13]	38 [1.51]	3 [.13]	--	41 [1.61]	234 [9.23]	170 [6.73]

Loading Information

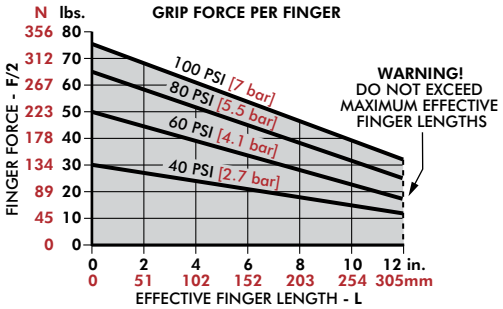

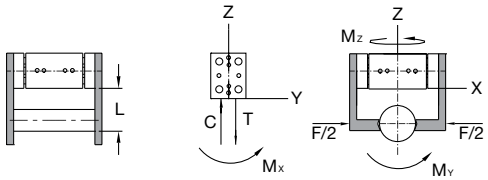

RPW-500M	Static	Dynamic
Maximum Tensile **T**	[500 lb] 2224 N	[50 lb] 222 N
Maximum Compressive **C**	[500 lb] 2224 N	[50 lb] 222 N
Maximum Moment M_x	[500 in-lb] 57 Nm	[50 in-lb] 6 Nm
Maximum Moment M_y	[750 in-lb] 85 Nm	[75 in-lb] 8 Nm
Maximum Moment M_z	[500 in-lb] 57 Nm	[50 in-lb] 6 Nm

†Capacities are per set of jaws and are not simultaneous

Dimensions and technical information are subject to change without notice

2-Jaw Heavy-Duty Parallel Grippers | Dimensions and Technical Specifications

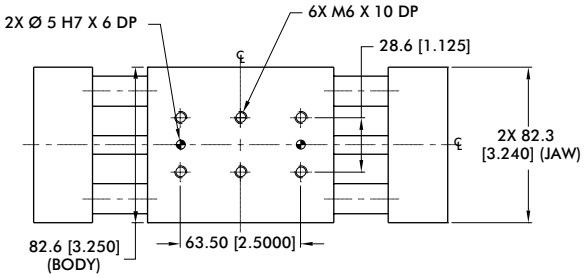

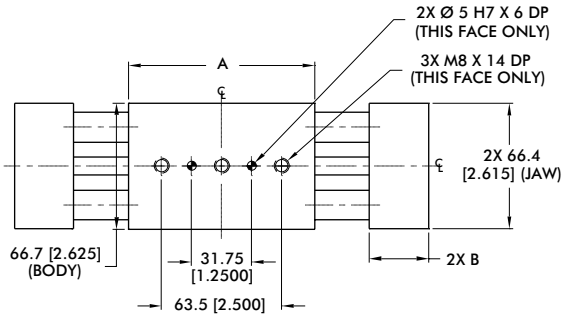

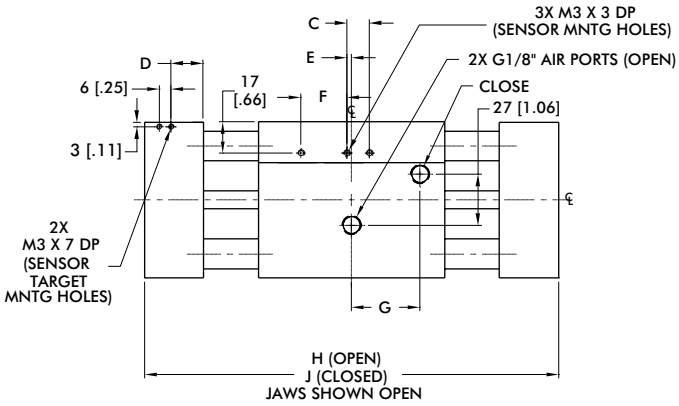

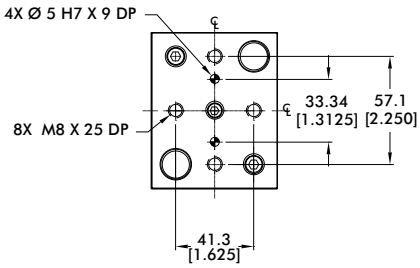

Sensor Accessories	625
Inductive Sensor Mtg Kit (2 Sensors)	OSMK-074

Seal Repair Kits	625
Buna-N Seal Repair Kit	SLKT-071
Viton® Seal Repair Kit	SLKT-071V

Model	A	B	C	D	E	F	G	H	J
RPW-625M-1	98.4 [3.875]	31.4 [1.235]	14 [0.55]	17 [0.66]	2 [0.08]	24 [0.96]	36 [1.42]	219 [8.63]	168 [6.63]
RPW-625M-2	136.5 [5.375]	44.1 [1.735]	15 [0.61]	5 [0.21]	9 [0.37]	43 [1.71]	55 [2.17]	321 [12.63]	232 [9.13]

Loading Information

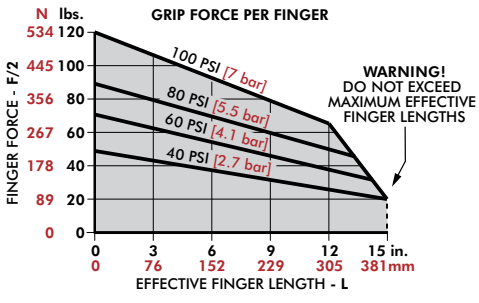

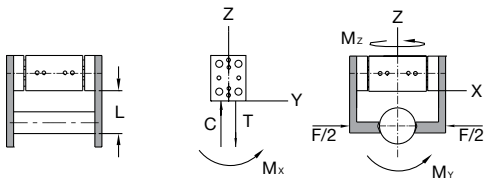

RPW-625M	Static	Dynamic
Maximum Tensile T	[1200 lbs] 5338 N	[125 lbs] 556 N
Maximum Compressive C	[1200 lbs] 5338 N	[125 lbs] 556 N
Maximum Moment M_x	[1000 in-lbs] 113 Nm	[100 in-lbs] 11 Nm
Maximum Moment M_y	[1500 in-lbs] 170 Nm	[125 in-lbs] 14 Nm
Maximum Moment M_z	[1000 in-lbs] 113 Nm	[100 in-lbs] 11 Nm

†Capacities are per set of jaws and are not simultaneous

RPW-750M

2-Jaw Heavy-Duty Parallel Grippers | Dimensions and Technical Specifications

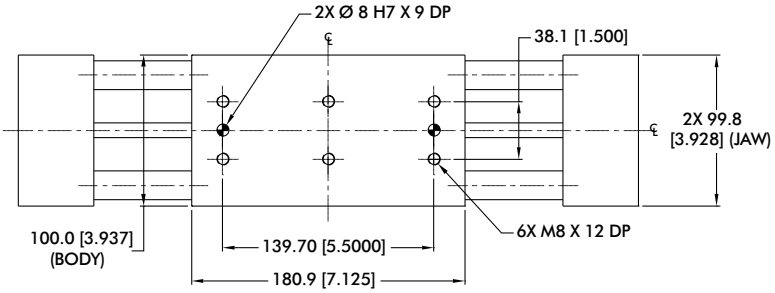

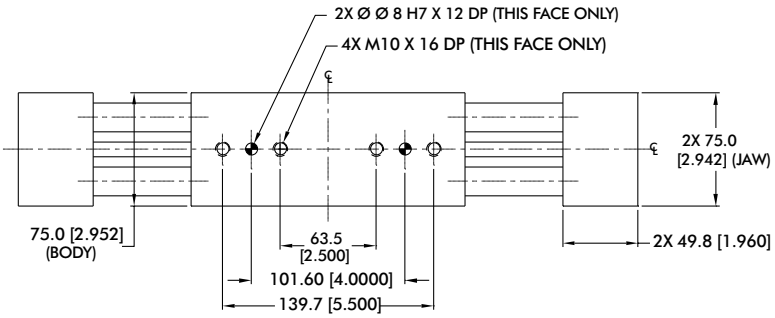

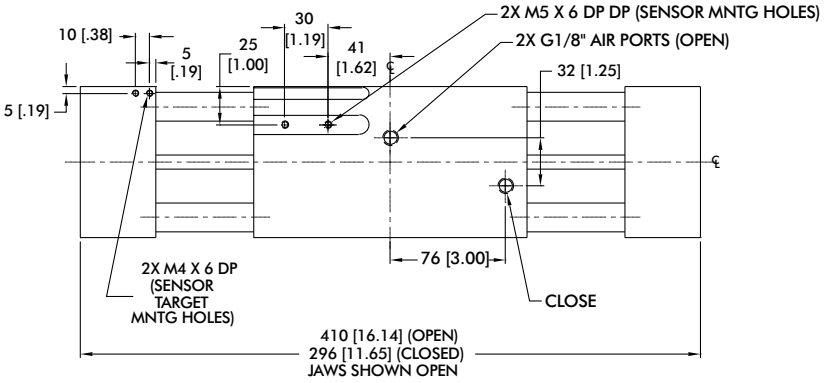

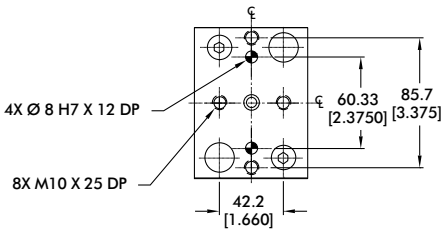

Sensor Accessories	750
Inductive Sensor Mtg Kit (2 Sensors)	OSMK-014

Seal Repair Kits	750
Buna-N Seal Repair Kit	SLKT-060
Viton® Seal Repair Kit	SLKT-060V

Loading Information

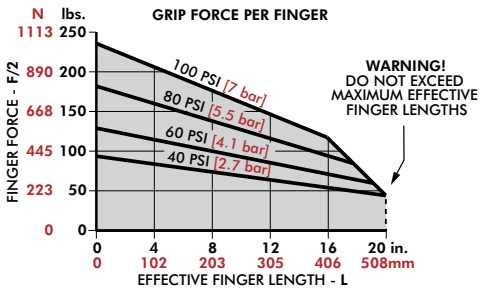

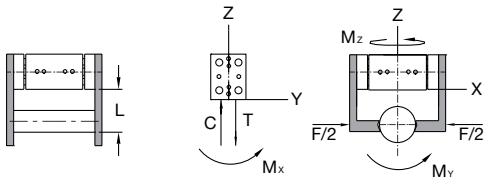

RPW-750M	Static	Dynamic
Maximum Tensile **T**	11121 N [2500 lb]	1112 N [250 lb]
Maximum Compressive **C**	11121 N [2500 lb]	1112 N [250 lb]
Maximum Moment M_x	226 Nm [2000 in-lb]	22 Nm [200 in-lb]
Maximum Moment M_y	339 Nm [3000 in-lb]	28 Nm [250 in-lb]
Maximum Moment M_z	226 Nm [2000 in-lb]	22 Nm [200 in-lb]

†Capacities are per set of jaws and are not simultaneous

Dimensions and technical information are subject to change without notice

Notes

3-JAW PARALLEL GRIPPER SERIES

3-Jaw Parallel Grippers | Dimensions and Technical Specifications

Model		Stroke mm [in]	Grip Force N [lbs]	Operating Environment	Special Features	Page GR-3JP-#
3P		10-50 [0.39-1.97]	422-11190 [95-2515]	IP54	Shielded Gripper with Spring Assist. Ideal for Round Parts. Tandem Cylinder Option. High Precision.	3
RTH	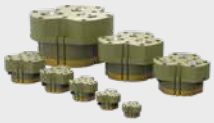	4-70 [0.1575-2.756]	445-44353 [100-9971]	IP55 Using Purge Port. Cleanroom Class 100, ISO 5 Using Scavenge Port	Shielded for Harsh & Rugged Applications. Suitable for Machining and Coolant Applications. High Precision. Spring Assist.	15
PPC		10-30 [0.394-1.181]	747-4332 [168-974]	IP54	Hole Through Center. High Precision. Harsh Environments. Round Parts Handling.	25
REP3		10-30 [0.39-1.181]	480-3268 [108-753]	IP55. Cleanroom Class 100, ISO 5 Using Scavenge Port	Spring Assist. Rugged and Harsh Environments. Round Parts. High Precision.	31
RPC		7.6-34.9 [0.3-1.38]	445-13345 [100-3000]	IP54	Harsh & Rugged Applications. High Precision. Round Parts Handling.	37

Dimensions and technical information are subject to change without notice

ENGINEERED RELIABILITY

Grippers, Rotates, and Linear Slide Solutions



Global Automation Solutions

DESTACO's Robohand products are engineered for reliability and long life to ensure maximum production uptime. These products are designed and machined for precise repeatability with minimal maintenance.

Industrial | Transportation | Food & Packaging | Consumer Goods | Logistics | Life Sciences

Assembly | Welding | CNC/Machining | Plastic Injection Molding | Fixture and Testing | White Goods/ Appliance

DESTACO a DOVER company

destaco.com

End Effectors | Grippers | Indexers | Manual Clamps | Power Clamps | Remote Handling

3P SERIES

3-Jaw Parallel Grippers | Features and Benefits | How To Order

Features:

- Robust and powerful precision multi-purpose gripper
- Pneumatic or hydraulic powered operation
- Optional tandem cylinder doubles grip force
- Protective boot and shielded design for harsh environments
- Spring assist option maintains grip in case of air pressure loss
- Uses inductive sensors for jaw position detection

Applications:

- Hydraulic powered gripping applications
- Confined spaces in harsh environment applications
- Welding applications with protective boot option



How To Order

Base Model
6003P
8003P
11003P
14003P
16503P

Spring Description
"Blank" No Spring
RE External Gripping
RI Internal Gripping

Sensor Unit Description
"Blank" No Sensors
KT1
KT2
KX1
KX2
Integral Sensor (See page GR-3JP-11 for detection zones and mounting positions)

Tandem Cylinder Description
"Blank" No Cylinder
M For Use with Pneumatic Power only

Power Description
P Pneumatic
H Hydraulic

Target Flag Description
"Blank" No Target Flag
T Sensor Target Flag

Inductive Sensor Mount Description
"Blank" No Sensor Mount
SD Inductive Sensor Mount

Stroke Description
"Blank" Standard Stoke
C Extended Stroke

Seals Description
"Blank" Buna-N
V Viton® High Temperature

Protective Boot Description
"Blank" None
E PVC Boot
E3 Fireproof Kevlar Boot

Accessories

Sensor Accessories	Model Numbers	Part Number	Qty/Unit
M8 Inductive Sensor PNP with M8 Connector	6003P, 8003P, 11003P	OISP-011	1-4
M8 Inductive Sensor NPN with M8 Connector	6003P, 8003P, 11003P	OISN-011	1-4
M8 Inductive Sensor PNP with M12 Connector	14003P, 16503P	OISP-017	1-4
M8 Inductive Sensor NPN with M12 Connector	14003P, 16503P	OISN-017	1-4
M8 Quick Disconnect 2 Meter Cable Length*	6003P, 8003P, 11003P	CABL-010	1-4
M12 Quick Disconnect 2 Meter Cable Length*	14003P, 16503P	CABL-014	1-4
Inductive Sensor Mounting Kit (1 holder, 1 flag, 2 spacers)	6003P, 8003P	SD60-80P	1-2
Inductive Sensor Mounting Kit (1 holder, 1 flag, 2 spacers)	11003P	SD110P	1-2
Inductive Sensor Mounting Kit (1 holder, 1 flag, 2 spacers)	14003P	OSMK-114	1-2
Inductive Sensor Mounting Kit (1 holder, 1 flag, 2 spacers)	16503P	OSMK-115	1-2

*Sensor and cable sold separately.

Specifications	Units	6003P-P	6003P-P-C	8003P-P	8003P-P-C	11003P-P	11003P-P-C
Grip Force (F6+R)1, 6 bar [87 psi], Springs Mid-Way, L=0	N [lbs]	678 [152]	422 [95]	1888 [424]	1219 [274]	1979 [445]	2030 [456]
Grip Force (F0+R)2, 0 bars, Springs Mid-Way, L=0	N [lbs]	172 [39]	107 [24]	617 [139]	398 [89]	628 [141]	644 [145]
Total Stroke	mm [in]	10 [0.39]	16 [0.63]	13 [0.51]	20 [0.79]	20 [0.79]	30 [1.18]
Weight	kg [lbs]	0.60 [1.32]		0.97 [2.14]		2.35 [5.18]	
Pressure Range w/o Spring	bar [psi]	2-7 [30-100]					
Pressure Range with Spring	bar [psi]	4-7 [60-100]					
Ingress Protection Class (IP)		IP54					
Displacement	cm^3 [in^3]	12 [0.73]		35 [2.14]		87 [5.31]	
Temp. Range (Buna-N seals)	°C [°F]	-35°~80° [-30°~180°]					
Temp. Range (Viton® seals)	°C [°F]	-30°~150° [-20°~300°]					
Actuation (open/close)	sec.	0.07		0.08		0.10	
Repeatability	mm [in]	±0.02 [±0.001]					

Specifications	Units	14003P-P	14003P-P-C	16503P-P	16503P-P-C
Grip Force (F6+R)1, 6 bar [87 psi], Springs Mid-Way, L=0	N [lbs]	6077 [1366]	4031 [906]	11190 [2515]	6878 [1546]
Grip Force (F0+R)2, 0 bars, Springs Mid-Way, L=0	N [lbs]	2248 [508]	1490 [335]	3730 [838]	2292 [515]
Total Stroke	mm [in]	26 [1.02]	40 [1.57]	30 [1.18]	50 [1.97]
Weight	kg [lbs]	4.7 [10.36]		9.04 [19.92]	
Pressure Range w/o Spring	bar [psi]	2-7 [30-100]			
Pressure Range with Spring	bar [psi]	4-7 [60-100]			
Ingress Protection Class (IP)		IP54			
Displacement	cm^3 [in^3]	220 [13.43]		494 [30.15]	
Temp. Range (Buna-N seals)	°C [°F]	-35°~80° [-30°~180°]			
Temp. Range (Viton® seals)	°C [°F]	-30°~150° [-20°~300°]			
Actuation (open/close)	sec.	0.16		0.29	
Repeatability	mm [in]	±0.02 [±0.001]			

6003P, 6003P-C

3-Jaw Parallel Grippers | Dimensions and Technical Specifications

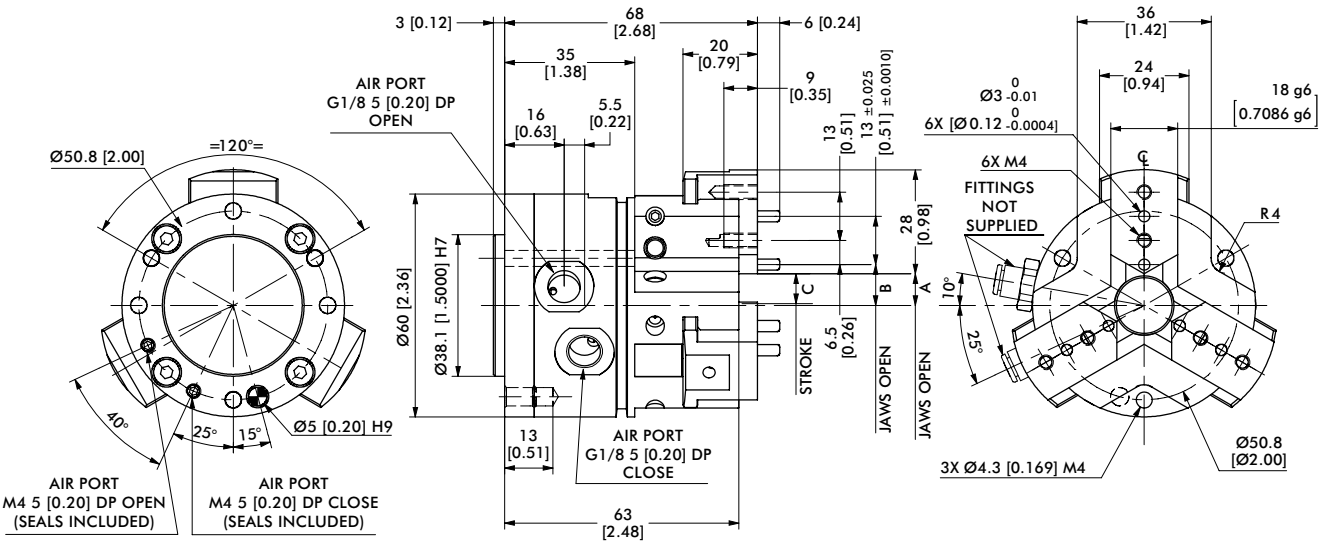

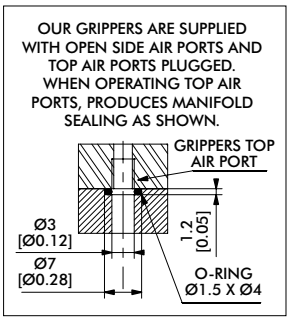

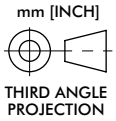

Model	A	B	C
6003P	5.5 [0.22]	8 [0.31]	5 [0.20]
6003P-C	8.5 [0.33]	11 [0.43]	8 [0.31]

Dimensions in mm [in]

Protective Boots	6003P
PVC Protective Boot, Brown or Black	ER63P
Fireproof KEVLAR Protective Boot, Red	E3R63P

Seal Repair Kits	6003P
Buna-N Seal Repair Kit	SLKT-156
Viton® Seal Repair Kit	SLKT-156V
Hydraulic Seal Repair Kit	SLKT-330

Loading Information

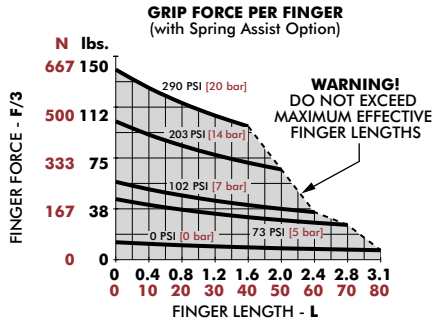

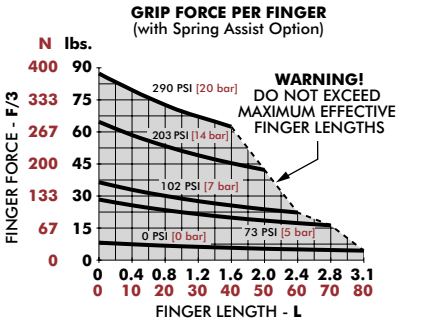

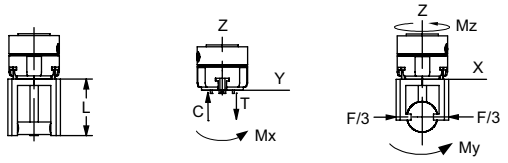

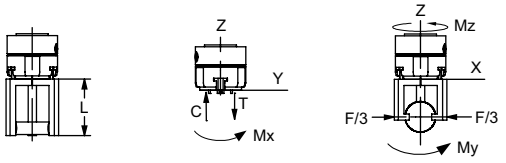

6003P	Static	Dynamic
Maximum Tensile **T**	819 N [184 lbs]	175 N [39 lbs]
Maximum Compressive **C**	1556 N [350 lbs]	175 N [39 lbs]
Maximum Moment M_x	42 Nm [372 in-lbs]	5 Nm [44 in-lbs]
Maximum Moment M_y	49 Nm [434 in-lbs]	6 Nm [53 in-lbs]
Maximum Moment M_z	54 Nm [478 in-lbs]	6 Nm [53 in-lbs]

†Capacities are per set of jaws and are not simultaneous

6003P-C	Static	Dynamic
Maximum Tensile **T**	745 N [167 lbs]	108 N [24 lbs]
Maximum Compressive **C**	1415 N [318 lbs]	108 N [24 lbs]
Maximum Moment M_x	34 Nm [301 in-lbs]	3 Nm [27 in-lbs]
Maximum Moment M_y	39 Nm [345 in-lbs]	4 Nm [35 in-lbs]
Maximum Moment M_z	49 Nm [434 in-lbs]	4 Nm [35 in-lbs]

†Capacities are per set of jaws and are not simultaneous

8003P, 8003P-C

3-Jaw Parallel Grippers | Dimensions and Technical Specifications

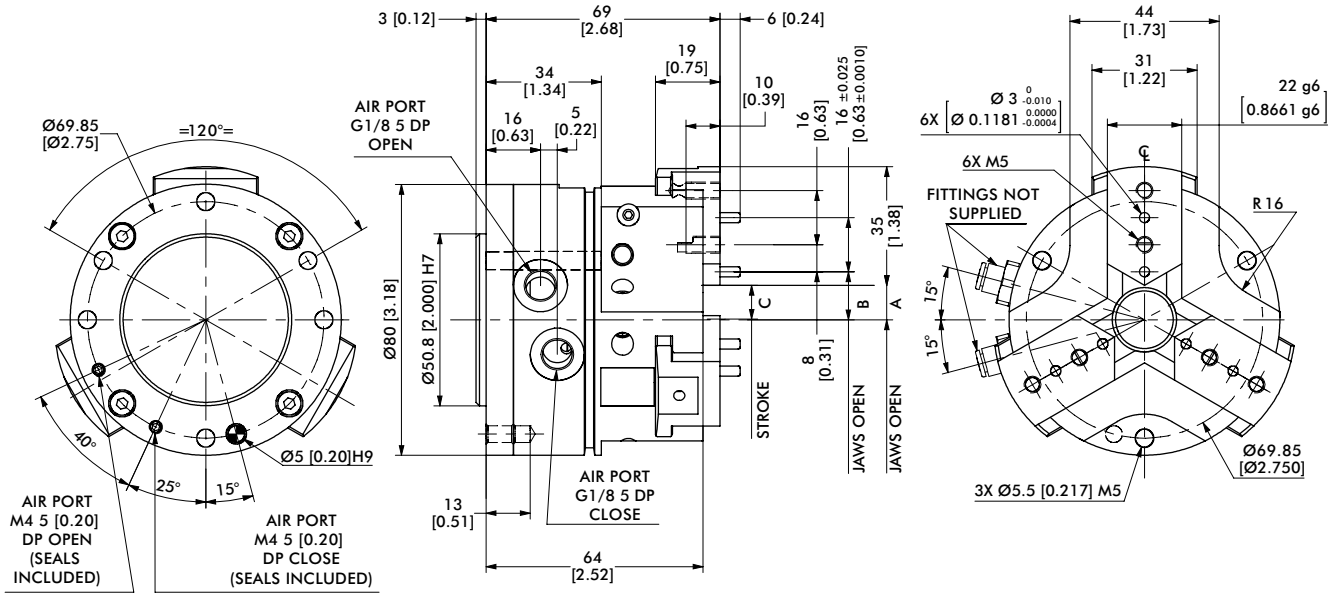

OUR GRIPPERS ARE SUPPLIED WITH OPEN SIDE AIR PORTS AND TOP AIR PORTS PLUGGED. WHEN OPERATING TOP AIR PORTS, PRODUCES MANIFOLD SEALING AS SHOWN.

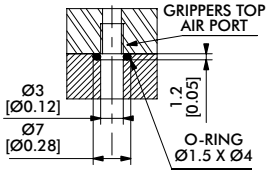

mm [INCH]

THIRD ANGLE PROJECTION

Model	A	B	C
8003P	6.8 [0.27]	10.8 [0.43]	6.5 [0.26]
8003P-C	10.2 [0.40]	14.2 [0.56]	10 [0.39]

Dimensions in mm [in]

Protective Boots	8003P
PVC Protective Boot, Brown or Black	ER83P
Fireproof KEVLAR Protective Boot, Red	E3R83P

Seal Repair Kits	8003P
Buna-N Seal Repair Kit	S80
Viton® Seal Repair Kit	S80V
Hydraulic Seal Repair Kit	S80H

Loading Information

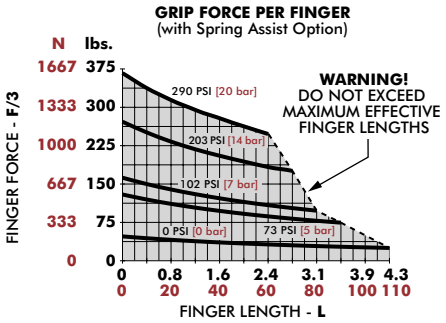

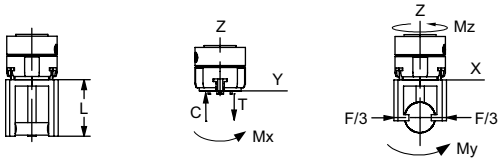

8003P	Static	Dynamic
Maximum Tensile **T**	1229 N [276 lbs]	436 N [98 lbs]
Maximum Compressive **C**	2075 N [466 lbs]	436 N [98 lbs]
Maximum Moment M_X	60 Nm [531 in-lbs]	16 Nm [142 in-lbs]
Maximum Moment M_Y	68 Nm [602 in-lbs]	19 Nm [168 in-lbs]
Maximum Moment M_Z	37 Nm [327 in-lbs]	19 Nm [168 in-lbs]

†Capacities are per set of jaws and are not simultaneous

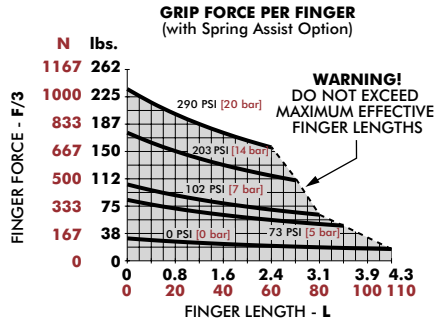

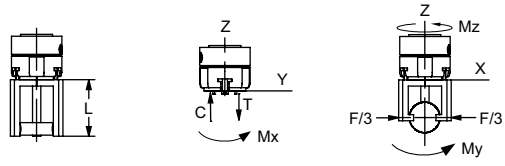

8003P-C	Static	Dynamic
Maximum Tensile **T**	1097 N [247 lbs]	281 N [63 lbs]
Maximum Compressive **C**	1853 N [416 lbs]	281 N [63 lbs]
Maximum Moment M_X	39 Nm [345 in-lbs]	12 Nm [106 in-lbs]
Maximum Moment M_Y	44 Nm [389 in-lbs]	13 Nm [115 in-lbs]
Maximum Moment M_Z	34 Nm [301 in-lbs]	13 Nm [115 in-lbs]

†Capacities are per set of jaws and are not simultaneous

11003P, 11003P-C

3-Jaw Parallel Grippers | Dimensions and Technical Specifications

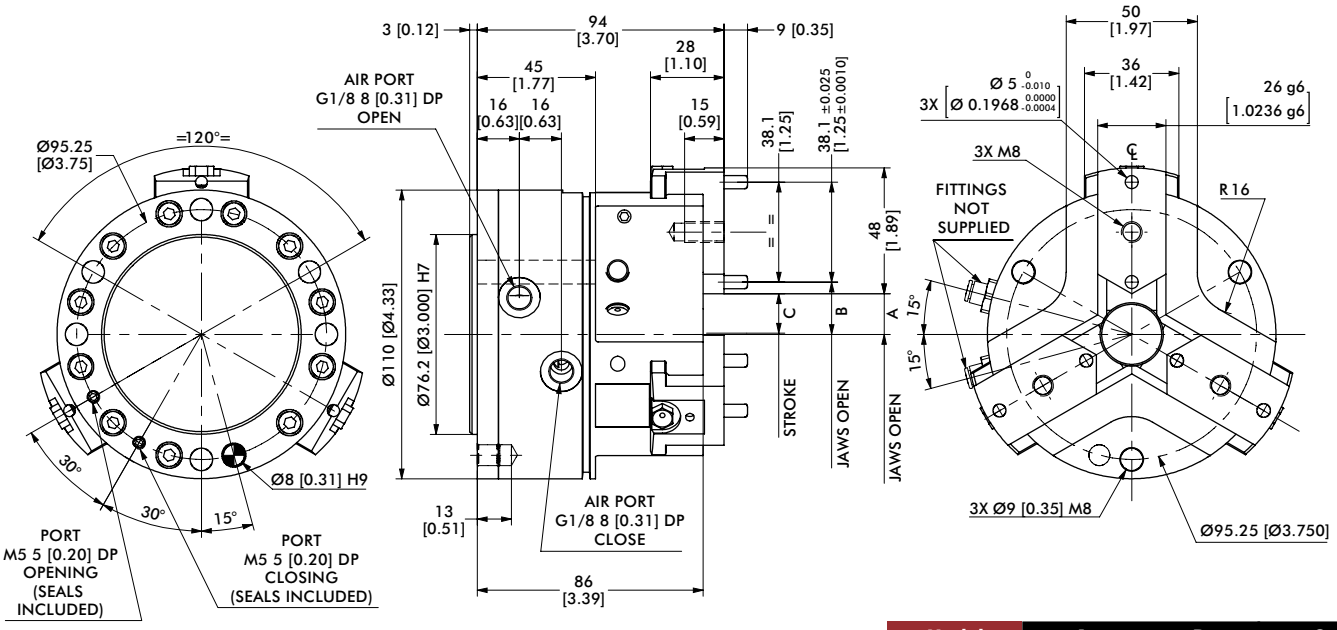

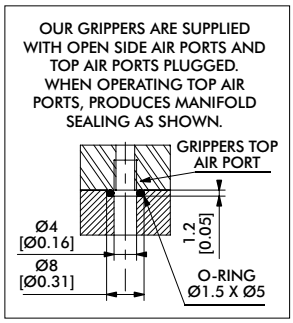

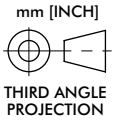

Model	A	B	C
11003P	10.5 [0.41]	15 [0.59]	10 [0.39]
11003P-C	15.5 [0.61]	20 [0.79]	15 [0.59]

Dimensions in mm [in]

Protective Boots	11003P
PVC Protective Boot, Brown or Black	ER113P
Fireproof KEVLAR Protective Boot, Red	E3R113P

Seal Repair Kits	11003P
Buna-N Seal Repair Kit	S110
Viton® Seal Repair Kit	S110V
Hydraulic Seal Repair Kit	S110H

Loading Information

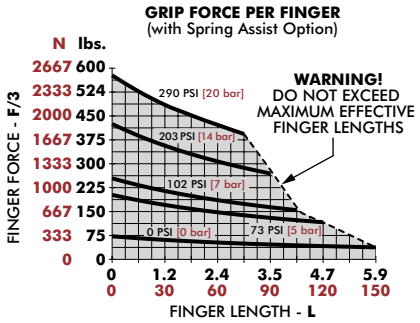

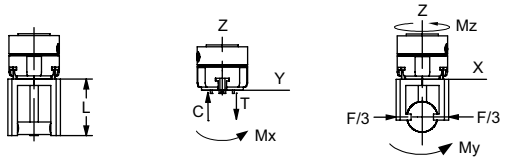

11003P	Static	Dynamic
Maximum Tensile **T**	1560 N [351 lbs]	695 N [156 lbs]
Maximum Compressive **C**	2652 N [596 lbs]	695 N [156 lbs]
Maximum Moment M_x	60 Nm [531 in-lbs]	31 Nm [274 in-lbs]
Maximum Moment M_y	80 Nm [708 in-lbs]	41 Nm [363 in-lbs]
Maximum Moment M_z	90 Nm [797 in-lbs]	41 Nm [363 in-lbs]

†Capacities are per set of jaws and are not simultaneous

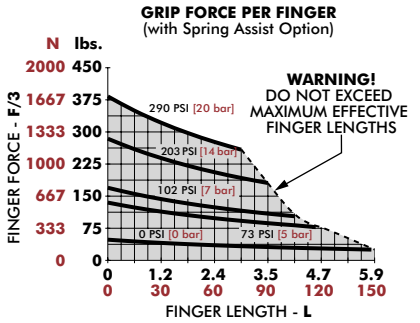

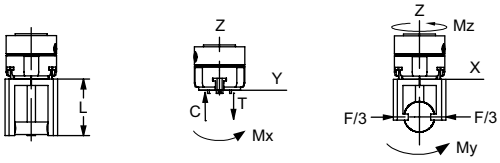

11003P-C	Static	Dynamic
Maximum Tensile **T**	1418 N [319 lbs]	463 N [104 lbs]
Maximum Compressive **C**	2411 N [542 lbs]	463 N [104 lbs]
Maximum Moment M_x	50 Nm [443 in-lbs]	22 Nm [195 in-lbs]
Maximum Moment M_y	66 Nm [584 in-lbs]	30 Nm [266 in-lbs]
Maximum Moment M_z	84 Nm [743 in-lbs]	30 Nm [266 in-lbs]

†Capacities are per set of jaws and are not simultaneous

Dimensions and technical information are subject to change without notice

14003P, 14003P-C

3-Jaw Parallel Grippers | Dimensions and Technical Specifications

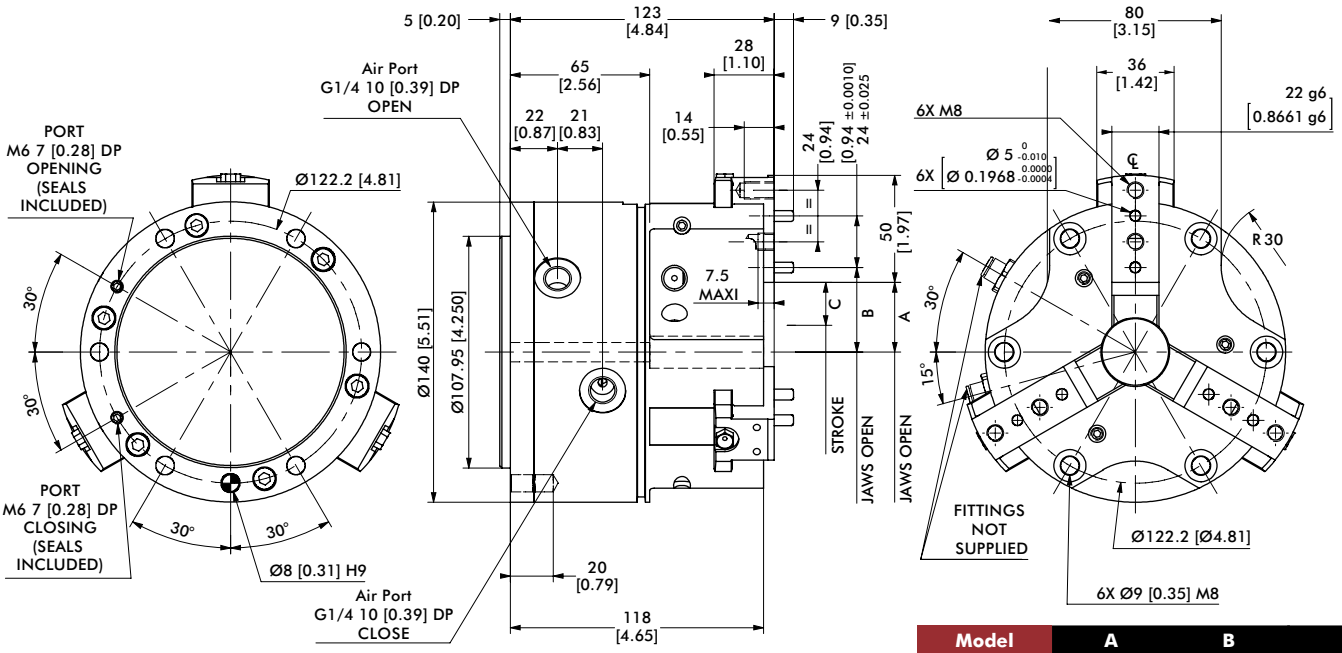

OUR GRIPPERS ARE SUPPLIED WITH OPEN SIDE AIR PORTS AND TOP AIR PORTS PLUGGED. WHEN OPERATING TOP AIR PORTS, PRODUCES MANIFOLD SEALING AS SHOWN.

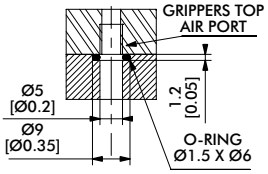

mm [INCH]

THIRD ANGLE PROJECTION

Model	A	B	C
14003P	25.5 [1.00]	32.5 [1.28]	13 [0.51]
14003P-C	32.5 [1.28]	39.5 [1.56]	20 [0.79]

Dimensions in mm [in]

Protective Boots	14003P
PVC Protective Boot, Brown or Black	KP-317
Fireproof KEVLAR Protective Boot, Red	KP-319

Seal Repair Kits	14003P
Buna-N Seal Repair Kit	SLKT-333
Viton® Seal Repair Kit	SLKT-333V
Hydraulic Seal Repair Kit	SLKT-334

Loading Information

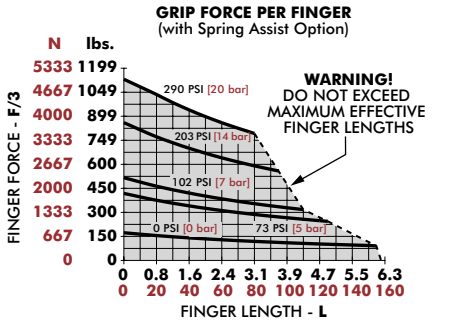

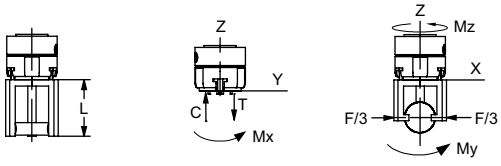

14003P	Static	Dynamic
Maximum Tensile **T**	2390 N [537 lbs]	850 N [191 lbs]
Maximum Compressive **C**	2700 N [607 lbs]	850 N [191 lbs]
Maximum Moment M_x	85 Nm [752 in-lbs]	25 Nm [221 in-lbs]
Maximum Moment M_y	130 Nm [1151 in-lbs]	40 Nm [354 in-lbs]
Maximum Moment M_z	100 Nm [885 in-lbs]	40 Nm [354 in-lbs]

†Capacities are per set of jaws and are not simultaneous

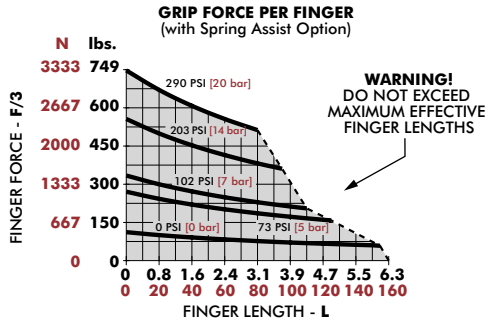

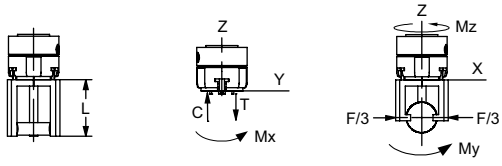

14003P-C	Static	Dynamic
Maximum Tensile **T**	2180 N [490 lbs]	590 N [133 lbs]
Maximum Compressive **C**	2500 N [562 lbs]	590 N [133 lbs]
Maximum Moment M_x	75 Nm [664 in-lbs]	20 Nm [177 in-lbs]
Maximum Moment M_y	110 Nm [974 in-lbs]	32 Nm [283 in-lbs]
Maximum Moment M_z	90 Nm [797 in-lbs]	32 Nm [283 in-lbs]

†Capacities are per set of jaws and are not simultaneous

16503P, 16503P-C

3-Jaw Parallel Grippers | Dimensions and Technical Specifications

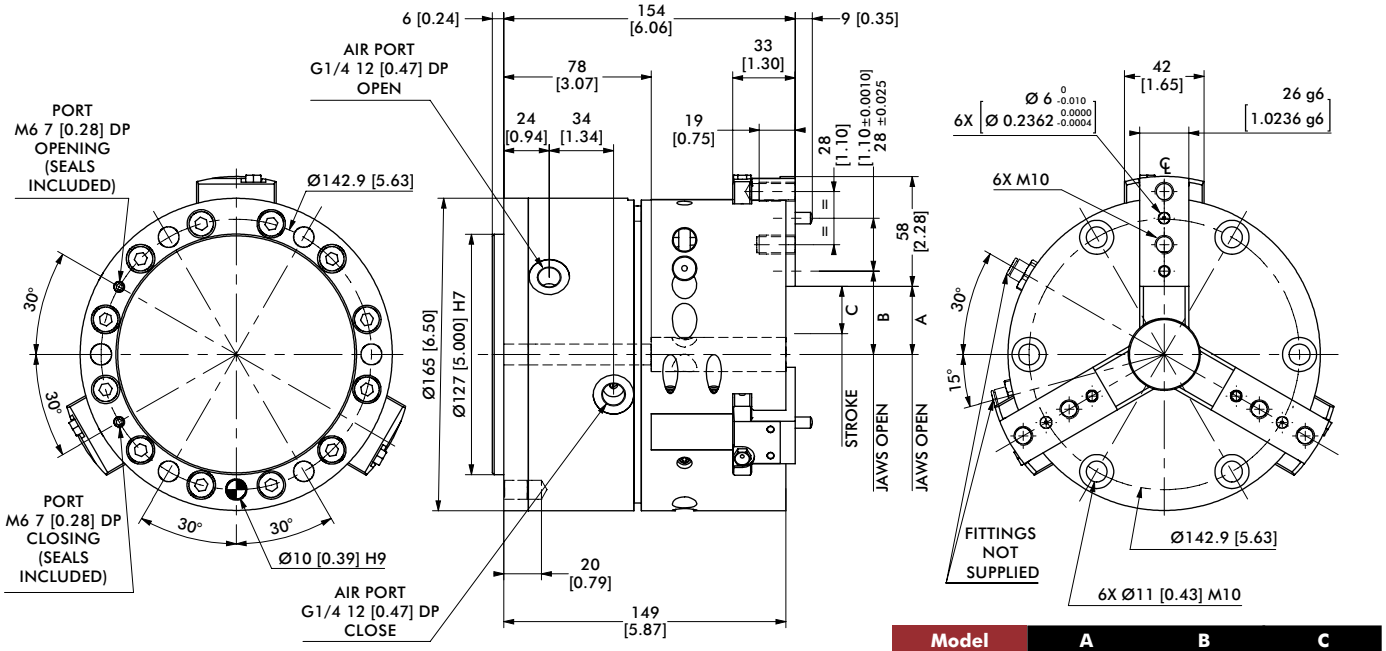

OUR GRIPPERS ARE SUPPLIED WITH OPEN SIDE AIR PORTS AND TOP AIR PORTS PLUGGED. WHEN OPERATING TOP AIR PORTS, PRODUCES MANIFOLD SEALING AS SHOWN.

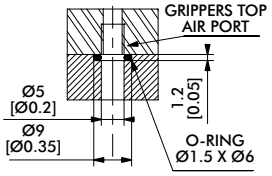

mm [INCH]

THIRD ANGLE PROJECTION

Model	A	B	C
16503P	31 [1.22]	39 [1.54]	15 [0.59]
16503P-C	36 [1.42]	44 [1.73]	25 [0.98]

Dimensions in mm [in]

Protective Boots	16503P
PVC Protective Boot, Brown or Black	KP-320
Fireproof KEVLAR Protective Boot, Red	KP-322

Seal Repair Kits	16503P
Buna-N Seal Repair Kit	SLKT-335
Viton® Seal Repair Kit	SLKT-335V
Hydraulic Seal Repair Kit	SLKT-336

Loading Information

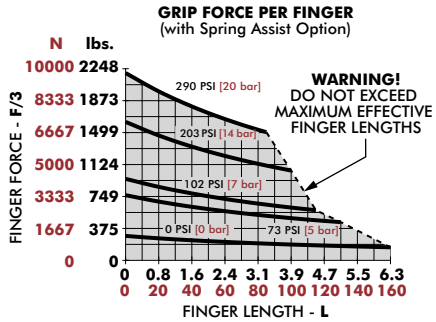

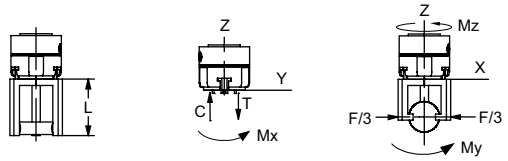

16503P	Static	Dynamic
Maximum Tensile **T**	2580 N [580 lbs]	980 N [220 lbs]
Maximum Compressive **C**	3200 N [719 lbs]	980 N [220 lbs]
Maximum Moment M_x	100 Nm [885 in-lbs]	32 Nm [283 in-lbs]
Maximum Moment M_y	150 Nm [1328 in-lbs]	50 Nm [443 in-lbs]
Maximum Moment M_z	140 Nm [1239 in-lbs]	50 Nm [443 in-lbs]

†Capacities are per set of jaws and are not simultaneous

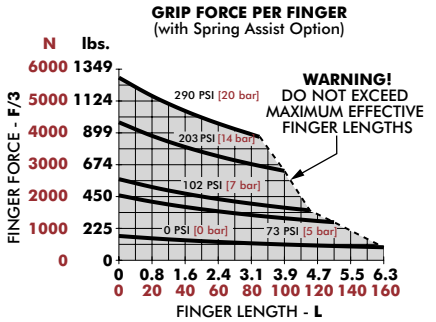

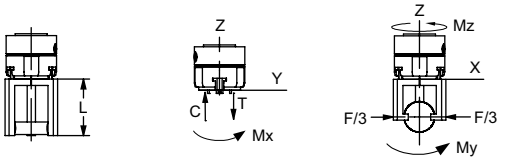

16503P-C	Static	Dynamic
Maximum Tensile **T**	2250 N [506 lbs]	810 N [182 lbs]
Maximum Compressive **C**	2800 N [629 lbs]	810 N [182 lbs]
Maximum Moment M_x	90 Nm [797 in-lbs]	28 Nm [248 in-lbs]
Maximum Moment M_y	140 Nm [1239 in-lbs]	40 Nm [354 in-lbs]
Maximum Moment M_z	130 Nm [1151 in-lbs]	40 Nm [354 in-lbs]

†Capacities are per set of jaws and are not simultaneous

Dimensions and technical information are subject to change without notice

SUPPLY: (P) Pneumatic (H) (H80) Hydraulic

As standard, the clamp is supplied with air to a pressure of 7 bar. On request (contact us) the gripper can be supplied with hydraulic fluid. The clamp is fitted with seals Viton Quad-Ring.

- Choice **(H)** allows a hydraulic power to a pressure of 20 bar max. In this case the overall dimensions do not change. For better security the gripper must be fixed on their support before being fired. **CAUTION: Hydraulic cycle times are longer.**

The hydraulic power is incompatible with the option tandem (M).

Option (RE) or (RI): Spring Assist

The internal springs of the gripper ensures grip force is maintained by retaining the component during pressure loss, to increase the gripforce, or allows the usage of the gripper in single acting operation.

Option **(RE)** for external gripping. Option **(RI)** for internal gripping.

The (RE) is incompatible with the option (RI).

Option (T): Sensor Rod

Option **(T)** is a steel rod which comes out on the rear side of the gripper. The rod is fixed with the piston and has the same stroke movement. The open end of the rod allows for mounting a cam which allows to control the position of the jaws by using inductive sensors, micro switches,etc

WARNING: when screwing on cam rod, make sure the sensor rod does not rotate to prevent twisting of the springs of options **(RE)** or **(RI)**.

Option (T) is incompatible with option (K).

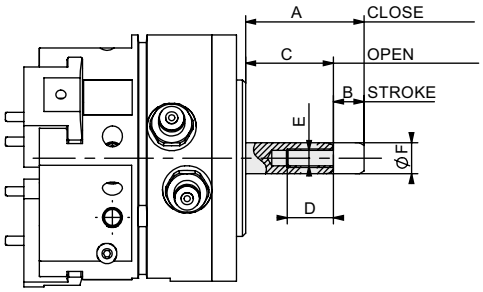

Model	A	B	C	D	E	F
6003P & 6003P-C	35	5	30	15	M6	10
8003P & 8003P-C	35	6.5	28.5	15	M6	10
11003P & 11003P-C	35	10	25	15	M6	15
14003P & 14003P-C	55	13	42	20	M8	15
16503P & 16503P-C	53	23	30	20	M8	15

Option (M): Tandem Cylinder

The **(M)** is a cylinder light-alloy that fits behind the bottom plate. This actuator's integral action allows to double the gripforce by using the same pressure. The combination of tandem option tandem **(M)** and Option **(RE)** or **(RI)** can double the clamping forces of the spring assist option. For cycle times of the tandem option, apply a factor of 3 to the actuation time.

The (M) is incompatible with the option (H).

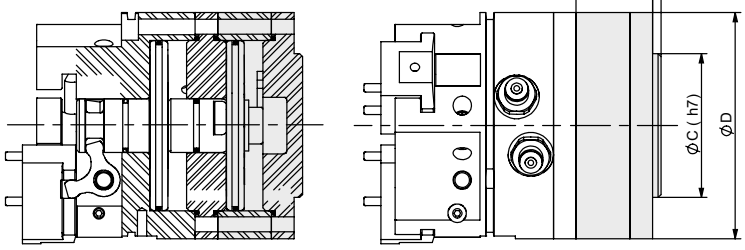

Model	Ay	ØC	ØD	W	Weight (kg)
6003P & 6003P-C	28.5	38.1	60	3	0.200
8003P & 8003P-C	27	50.8	80	3	0.300
11003P & 11003P-C	34	76.2	110	3	0.750
14003P & 14003P-C	49	107.95	140	5	2.100
16503P & 16503P-C	65	127	165	6	3.600

3P OPTIONS & ACCESSORIES

3-Jaw Parallel Grippers | Dimensions and Technical Specifications

Option (KT1), (KX1), (KT2), (KX2): Sensor Unit

The **(K)** is a lightweight alloy housing that fits on the back of the gripper. An integrated shaft follows the movement of the piston to provide information to the sensor attached to the side of the unit. It can control two positions of the grippers jaws. 2 types of inductive sensors **(KT, KX)** and 2 detection zones **(1, 2)** are possible to allow for the combination of 2 to 4 possible positions **(KT1, KX1, KT2, KX2)**. For **KT, KX** sensor specifications.

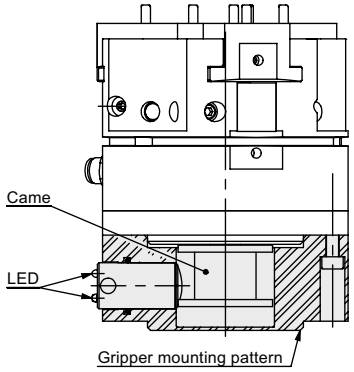

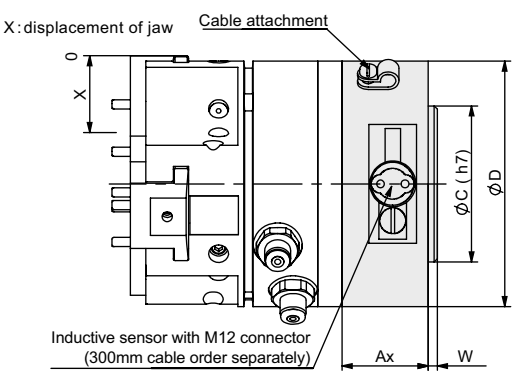

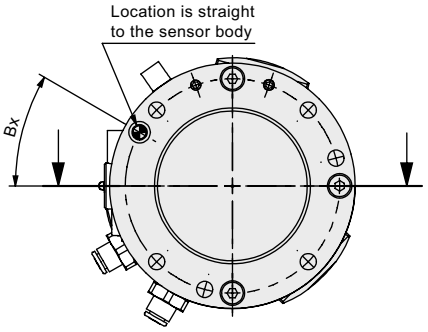

Model	Ax	Bx	ØC	ØD	W	Weight (k(g)	No. of Sensing Postions (please specify when ordering)	Information area from the open grip position (green LED) X (mm)	Area information relative to the closed grip position (yellow LED) X (mm)
6003P	23	30°	38.1	60	3	0.180	1	0 or 1 $^{+0,5}_{-0}$	4 $^{+0,5}_{-0}$ or 5
							2	0 or 2 $^{+0,5}_{-0}$	3 $^{+0,5}_{-0}$ or 5
6003P-C	23	30°	38.1	60	3	0.180	1	0 or 1.6 $^{+0,8}_{-0}$	7 $^{+0,8}_{-0}$ or 8
							2	0 or 3.2 $^{+0,8}_{-0}$	4.8 $^{+0,8}_{-0}$ or 8
8003P	28	30°	50.8	80	3	0.400	1	0 or 1 $^{+0,5}_{-0}$	5.5 $^{+0,5}_{-0}$ or 6,5
							2	0 or 2 $^{+0,5}_{-0}$	4.5 $^{+0,5}_{-0}$ or 6,5
8003P-C	28	30°	50.8	80	3	0.400	1	0 or 1.5 $^{+0,8}_{-0}$	8.5 $^{+0,8}_{-0}$ or 10
							2	0 or 3.1 $^{+0,8}_{-0}$	6.9 $^{+0,8}_{-0}$ or 10
11003P	36	30°	76.2	110	3	0.900	1	0 or 1 $^{+0,5}_{-0}$	9 $^{+0,5}_{-0}$ or 10
							2	0 or 3 $^{+0,5}_{-0}$	7 $^{+0,5}_{-0}$ or 10
11003P-C	36	30°	76.2	110	3	0.900	1	0 or 1.5 $^{+0,8}_{-0}$	13.5 $^{+0,8}_{-0}$ or 15
							2	0 or 4.5 $^{+0,8}_{-0}$	10.5 $^{+0,8}_{-0}$ or 15
14003P	45.5	165°	107.95	140	5	1.670	1	0 or 2 $^{+0,5}_{-0}$	11 $^{+0,5}_{-0}$ or 13
							2	0 or 4 $^{+0,5}_{-0}$	9 $^{+0,5}_{-0}$ or 13
14003P-C	45.5	165°	107.95	140	5	1.670	1	0 or 3 $^{+0,8}_{-0}$	17 $^{+0,8}_{-0}$ or 20
							2	0 or 6.2 $^{+0,8}_{-0}$	13.8 $^{+0,8}_{-0}$ or 20
16003P	65.5	165°	127	165	6	2.670	1	0 or 2 $^{+0,5}_{-0}$	13 $^{+0,5}_{-0}$ or 15
							2	0 or 4 $^{+0,5}_{-0}$	11 $^{+0,5}_{-0}$ or 15
16003P-C	65.5	165°	127	165	6	2.670	1	0 or 3.3 $^{+0,8}_{-0}$	21.7 $^{+0,8}_{-0}$ or 25
							2	0 or 7 $^{+0,8}_{-0}$	18 $^{+0,8}_{-0}$ or 25

Option (V): Viton® Seals

Gripper with Viton® seals allows for use in high temperature environments [-30 ° C or 150 ° C].

Accessory (E): Protective Boot

The accessory **(E)** is a protective boot that fits over the gripper. It protects the mechanism and thus improves the life of the gripper in hostile environments. The accessory **(E)** causes a different location of the fingers on the jaws as compared to the standard installation. Before attaching the boot, perform the following steps:

1. Mount gripper to machine.
2. Slip boot over gripper and secure in place.
3. Attached fingers to jaws using finger adapter.

Depending on the environment 2 types of envelopes are available:

(E) Envelope of black or brown PVC for environmental grinding with emery presence.

(E3) red envelope containing KEVLAR fireproof silicone environment for hot chips and weld spatter.

The accessory (E) is incompatible with the accessory (SD)

Model Code	Order #	Model	A	B	C	D	E	F	G	H	J	K	S	T	TX	V	Y
E	ER62P	6003P & 6003P-C	88	98	35	13.5	8	29	29	17.5	13	–	3	M4	9	13	6
E3	E3R62P																
E	ER82P	8003P & 8003P-C	89	110	34	13.5	10	33	30	22.3	16	–	3	M5	10	16	6
E3	E3R82P																
E	ER112P	11003P & 11003P-C	See Drawing														
E3	E3R112P																
E	KP-311	14003P & 14003P-C	143	185	50	18	12	55	34	19.5	24	18	5	M8	14	–	8
E3	KP-313																
E	KP-314	16003P & 16003P-C	172	220	70	16	14	67	37	24 19	28	23	6	M10	19	–	8
E3	KP-316																

6003P & 8003P

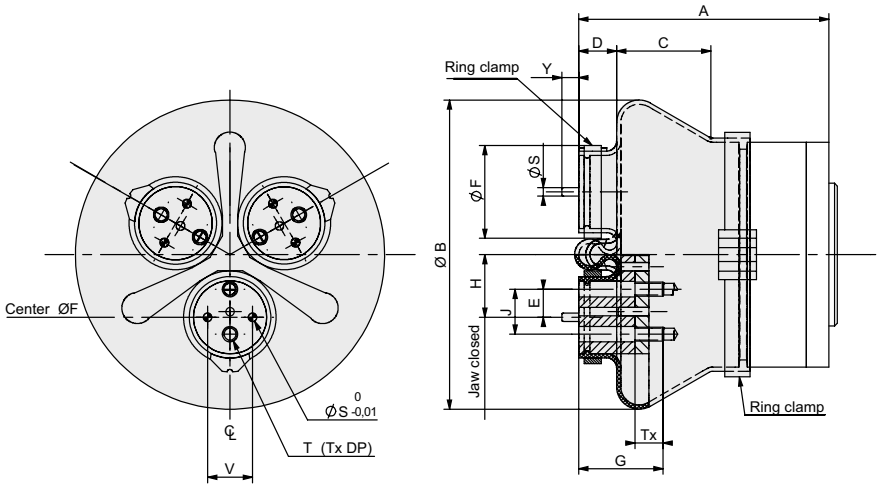

3P OPTIONS & ACCESSORIES

3-Jaw Parallel Grippers | Dimensions and Technical Specifications

11003P

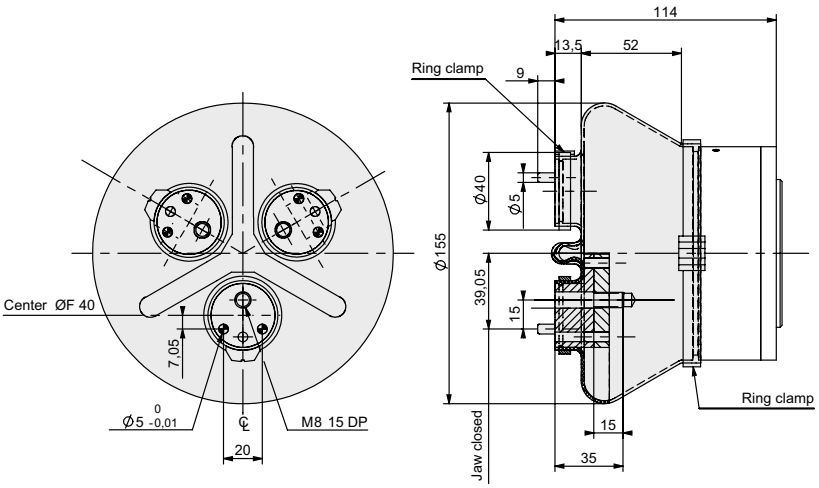

14003P & 16503P

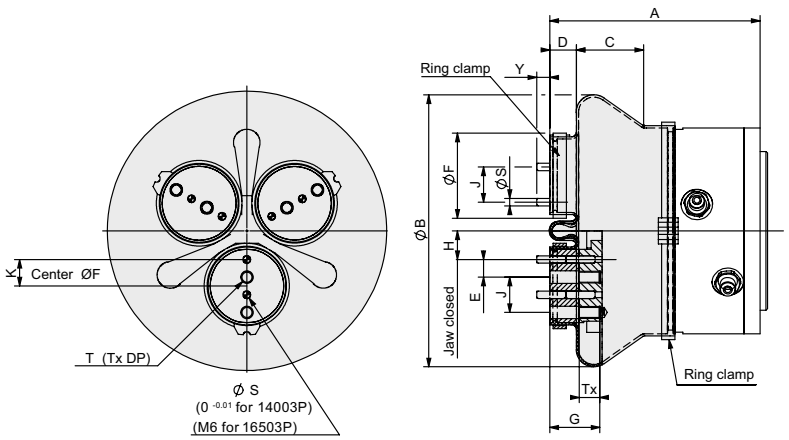

Accessory (SD): Inductive Sensor Mounting Kit

Allows for sensing of two positions: open and closed jaw. The accessory kit **(SD)** includes: 1 sensor bracket, 1 flag and screws. **Sensors are not provided.**

NOTES: To be usable, the cylindrical inductive sensors selected by the customer must have tapped their bodies to a minimum depth H (see table below).

Depending on their length, the cylindrical inductive sensors can extend below the clamp, requiring provision of suitable housing in the surrounding parts. It is possible to control more than 2 positions using a second attachment **(SD)**.

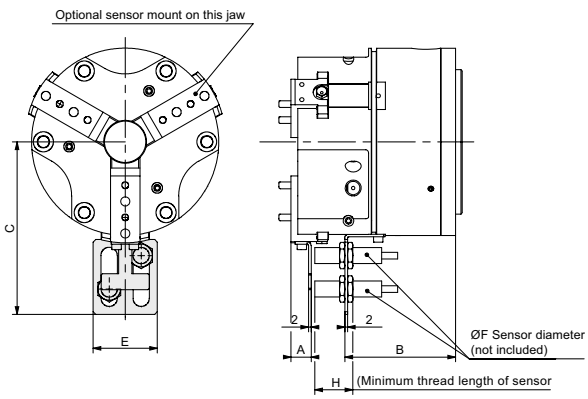

Order #	Model	A	B	C	E	F	H
SD60-80P	6003P & 6003P-C	20	35	67	32	8	35
SD60-80P	8003P & 8003P-C	19	34	77	32	8	35
SD110P	11003P & 11003P-C	19.5	45	97	32	8	35
OSMK-114	14003P & 14003P-C	15	83	129	48	12	28.5
OSMK-115	16503P & 16503P-C	29	96	147	48	12	33

Notes

RTH SERIES

3-Jaw Parallel Grippers | Features and Benefits | How To Order

Features:

- Rugged multi-purpose powerful gripper
- 8 sizes for small lightweight to very large and heavy part gripping
- High impact resistant with triple wedge design
- Shielded gripper to repel metal chips/particulates
- Spring assist option maintains grip in case of air pressure loss
- Purge and scavenge ports for harsh & clean environments
- Multi-position sensing up to 3 locations

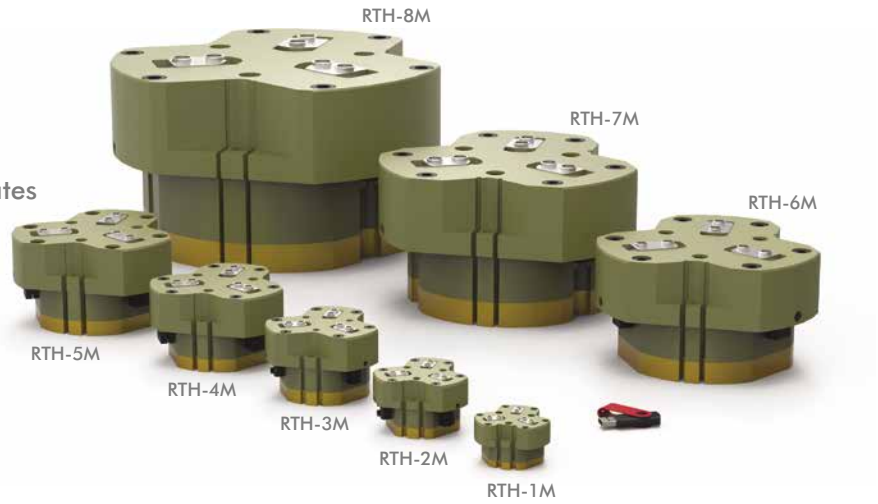

(USB key shown for scale)

Applications:

- Large round shaped parts
- Automotive engine block and gantry systems
- Ideal for very heavy part gripping

How To Order

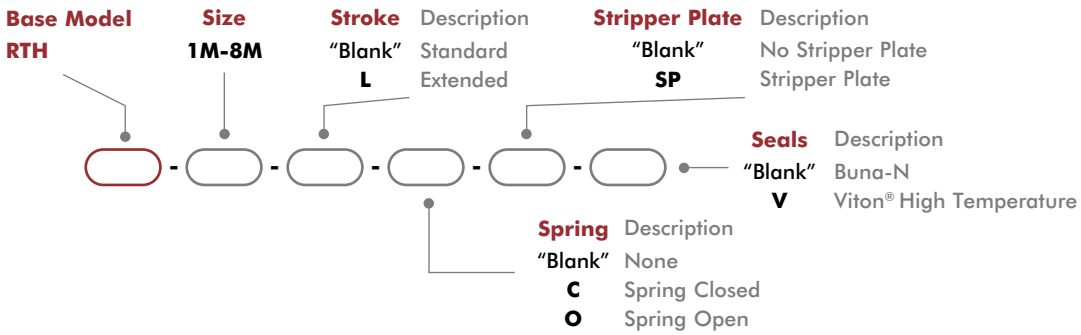

Accessories

Sensor Accessories	Model Numbers	Part Number	Qty/Unit
8mm PNP Magneto Resistive Sensor (90° barrel) w/ M8 Qk. Disc*	All Models	OHSP-011	1-3†
8mm NPN Magneto Resistive Sensor (90° barrel) w/ M8 Qk. Disc*	All Models	OHSN-011	1-3†
8mm PNP Magneto Resistive Sensor Short Barrel w/ M8 Qk Disc*	All Models	OHSP-017	1-3†
8mm NPN Magneto Resistive Sensor Short Barrel w/ M8 Qk Disc*	All Models	OHSN-017	1-3†
8mm PNP Inductive Sensor w/ M12 Quick Disconnect*	RTH-4M, -5M, -6M	OISP-011	1-3
8mm NPN Inductive Sensor w/ M12 Quick Disconnect*	RTH-4M, -5M, -6M	OISN-011	1-3
12mm PNP Inductive Sensor w/ M12 Quick Disconnect*	RTH-7M, -8M	OISP-017	1-3
12mm NPN Inductive Sensor w/ M12 Quick Disconnect*	RTH-7M, -8M	OISN-017	1-3
M8 Quick Disconnect 2 Meter Cable Length*	All Models	CABL-010	1-3
M8 Quick Disconnect 5 Meter Cable Length*	All Models	CABL-013	1-3
M12 Quick Disconnect 2 Meter Cable Length*	RTH-7M, -8M	CABL-014	1-3†
M12 Quick Disconnect 5 Meter Cable Length*	RTH-7M, -8M	CABL-018	1-3†

Pneumatic Accessories	Model Numbers	Part Number	Qty/Unit
M5 Adjustable Flow Control	RTH-1M, -2M, -3M	VLVF-008	1-2
G 1/8" 90° Adjustable Flow Control	RTH-4M, -5M, -6M, -7M	VLVF-005	1-2
G 1/4" Adjustable Flow Control	RDH-8M	VLVF-010	1-2

*Sensor and cable sold separately. †Except RTH-1, 1-2 only.

Dimensions and technical information are subject to change without notice

Specifications	Units	1M	1M-L	2M	2M-L	3M	3M-L	4M	4M-L
Total Rated Grip Force **F** @ 100 psi [7 bar] w/o Spring Assist	N [lbs]	682 [153]	443 [100]	1238 [278]	812 [183]	2078 [467]	1349 [303]	3644 [819]	2366 [532]
Total Rated Grip Force **F** @ 100 psi [7 bar] with Spring Assist	N [lbs]	889 [200]	579 [130]	1490 [335]	979 [220]	2627 [591]	1708 [384]	4562 [1026]	2967 [667]
Total Stroke	mm [in]	4 [0.16]	8 [0.32]	6 [0.24]	12 [0.47]	8 [0.31]	16 [0.63]	10 [0.39]	20 [0.79]
Weight	kg [lbs]	0.25 [0.6]		0.53 [1.2]		1.08 [2.4]		1.95 [4.3]	
Pressure Range w/o Spring	bar [psi]	2-7 [30-100]							
Pressure Range with Spring	bar [psi]	4-7 [60-100]				3.5-7 [50-100]		3-7 [45-100]	
Max. Vacuum for Scavenge Port	mm Hg [in Hg]	200 [8]							
Max. Pressure for Purge Port	bar [psi]	2.1 [30]							
Ingress Protection Class (IP)		IP55							
Displacement	cm^3 [in^3]	6.5 [0.40]		17 [1.05]		37 [2.30]		80 [4.90]	
Temperature Range (Buna-N seals)	°C [°F]	-35°~80° [-30°~180°]							
Temperature Range (Viton® seals)	°C [°F]	-30°~150° [-20°~300°]							
Actuation (open/close)	sec.	0.06		0.07		0.08		0.1	
Accuracy	mm [in]	±0.04 [±0.002]						±0.06 [±0.0024]	
Repeatability	mm [in]	±0.02 [±0.001]						±0.03 [±0.0012]	
Valve to Actuate Single Acting		3-way, 2-position							
Valve to Actuate Double Acting		4-way, 2-position							

Specifications (cont.)	Units	5M	5M-L	6M	6M-L	7M	7M-L	8M	8M-L
Total Rated Grip Force **F** @ 100 psi [7 bar] w/o Spring Assist	N [lbs]	6353 [1428]	4125 [927]	10202 [2294]	6629 [1490]	17165 [3859]	11102 [2496	35288 [7933]	22784 [5122]
Total Rated Grip Force **F** @ 100 psi [7 bar] with Spring Assist	N [lbs]	7877 [1771]	5124 [1152]	13786 [3099]	8971 [2017]	22093 [4967]	14322 [3222]	44354 [9971]	28690 [6450]
Total Stroke	mm [in]	13 [0.51]	26 [1.02]	16 [0.63]	32 [1.26]	25 [0.98]	50 [1.97]	35 [1.38]	70 [2.76]
Weight	kg [lbs]	3.9 [8.6]		7.89 [17.4]		15.7 [34.6]		43.9 [96.8]	
Pressure Range w/o Spring	bar [psi]	2-7 [30-100]							
Pressure Range with Spring	bar [psi]	3-7 [45-100]		4-7 [55-100]				3.5-7 [50-100]	
Max. Vacuum for Scavenge Port	mm Hg [in Hg]	20 [8]							
Max. Pressure for Purge Port	bar [psi]	2.1 [30]							
Ingress Protection Class (IP)		IP55							
Displacement	cm^3 [in^3]	180 [11.0]		355 [22]		940 [57]		2720 [166]	
Temperature Range (Buna-N seals)	°C [°F]	-35°~80° [-30°~180°]							
Temperature Range (Viton® seals)	°C [°F]	-30°~150° [-20°~300°]							
Actuation (open/close)	sec.	0.19		0.236		0.85		1.7	
Accuracy	mm [in]	±0.06 [±0.0024]		±0.08 [±0.0031]		±0.1 [±0.0039]			
Repeatability	mm [in]	±0.03 [±0.0012]		±0.04 [±0.0016]		±0.05 [±0.002]			
Valve to Actuate Single Acting		3-way, 2-position							
Valve to Actuate Double Acting		4-way, 2-position							

RTH-1M, -1M-L

3-Jaw Parallel Grippers | Dimensions and Technical Specifications

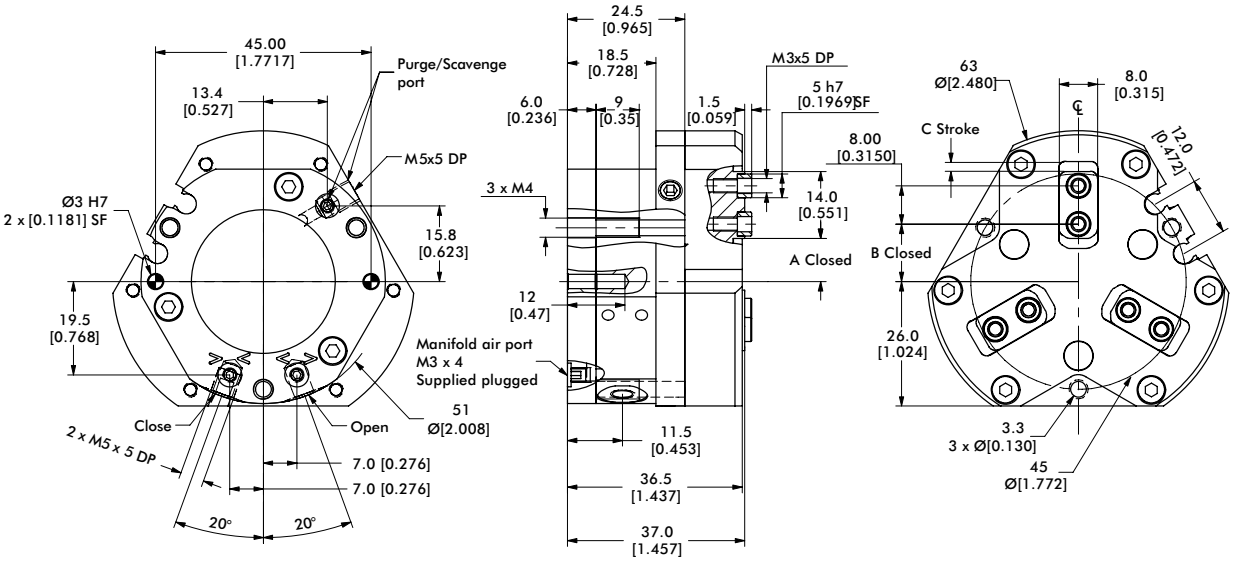

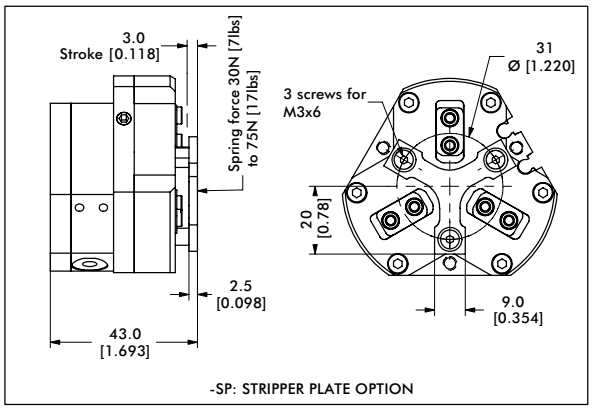

mm [INCH]

THIRD ANGLE PROJECTION

Model	A	B	C
RTH-1M	9.0 [0.354]	12.0 [0.472]	2.0 [0.08]
RTH-1M-L	7.0 [0.276]	10.0 [0.394]	4.1 [0.16]

Dimensions in mm [in]

Seal Repair Kits	RTH-1M
Buna-N Seal Repair Kit	SLKT-347
Buna-N Rear Inlet Seal Repair Kit	SLKT-363
Viton® Seal Repair Kit	SLKT-347V
Viton® Rear Inlet Seal Repair Kit	SLKT-363V

Loading Information

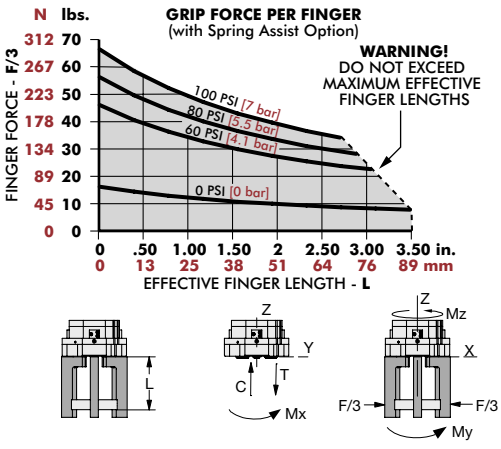

RTH-1M	Static	Dynamic
Maximum Tensile **T**	810 N [182 lbs]	89 N [20 lbs]
Maximum Compressive **C**	1060 N [238 lbs]	89 N [20 lbs]
Maximum Moment M_x	22 Nm [195 in-lbs]	2 Nm [18 in-lbs]
Maximum Moment **My**	28 Nm [248 in-lbs]	3 Nm [27 in-lbs]
Maximum Moment M_z	18 Nm [159 in-lbs]	3 Nm [27 in-lbs]

†Capacities are per set of jaws and are not simultaneous

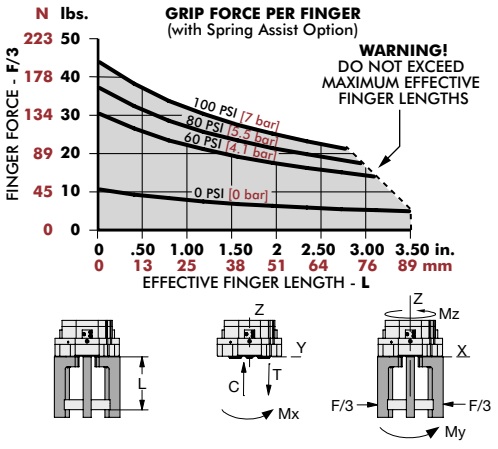

RTH-1M-L	Static	Dynamic
Maximum Tensile **T**	730 N [164 lbs]	57 N [13 lbs]
Maximum Compressive **C**	960 N [216 lbs]	57 N [13 lbs]
Maximum Moment M_x	20 Nm [177 in-lbs]	1 Nm [9 in-lbs]
Maximum Moment **My**	23 Nm [204 in-lbs]	1 Nm [9 in-lbs]
Maximum Moment M_z	15 Nm [133 in-lbs]	1 Nm [9 in-lbs]

†Capacities are per set of jaws and are not simultaneous

Dimensions and technical information are subject to change without notice

3-Jaw Parallel Grippers | Dimensions and Technical Specifications

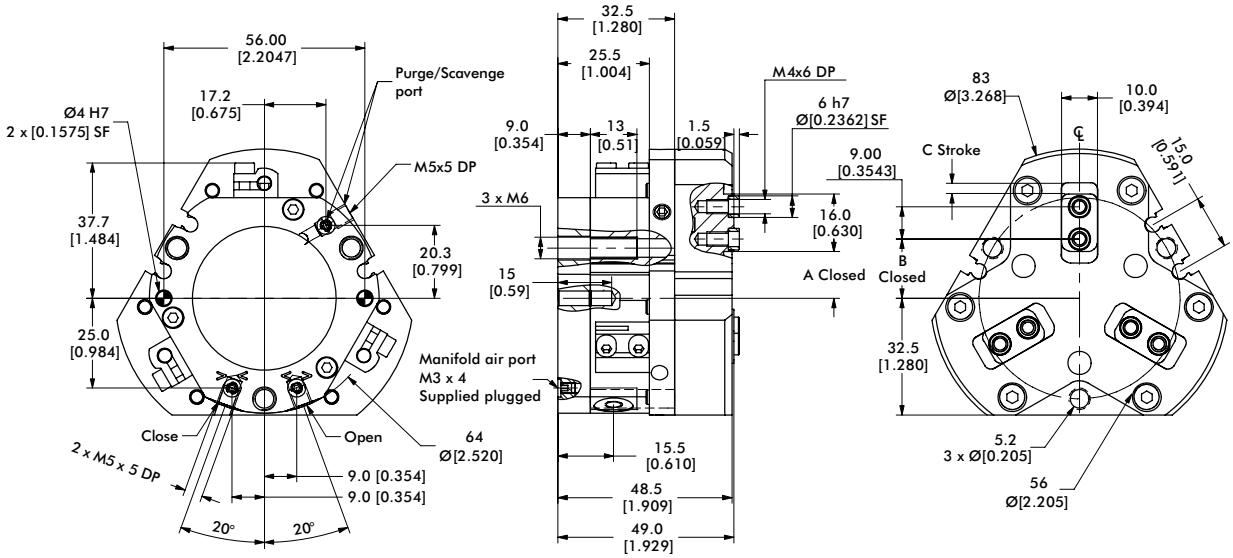

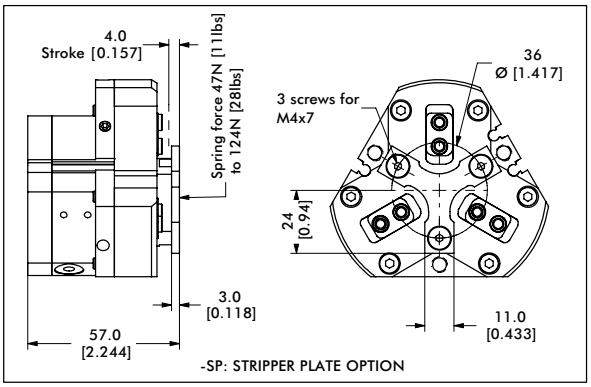

mm [INCH]

THIRD ANGLE PROJECTION

Model	A	B	C
RTH-2M	13.0 [0.512]	16.5 [0.650]	3.0 [0.12]
RTH-2M-L	10.0 [0.394]	13.5 [0.531]	6.0 [0.24]

Dimensions in mm [in]

Seal Repair Kits	RTH-2M
Buna-N Seal Repair Kit	SLKT-348
Buna-N Rear Inlet Seal Repair Kit	SLKT-363
Viton® Seal Repair Kit	SLKT-4348V
Viton® Rear Inlet Seal Repair Kit	SLKT-363V

Loading Information

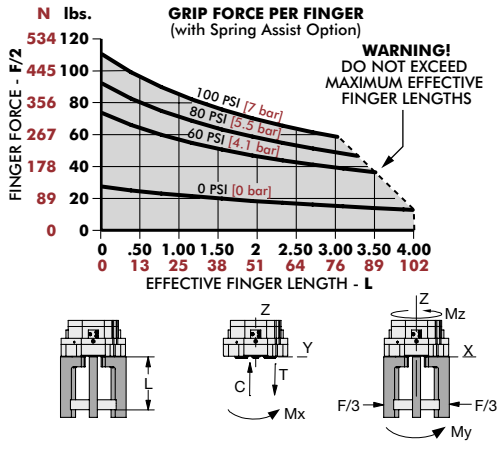

RTH-2M	Static	Dynamic
Maximum Tensile **T**	1200 N [270 lbs]	129 N [29 lbs]
Maximum Compressive **C**	1560 N [351 lbs]	129 N [29 lbs]
Maximum Moment $\mathbf{M_X}$	45 Nm [398 in-lbs]	4 Nm [35 in-lbs]
Maximum Moment $\mathbf{M_Y}$	64 Nm [566 in-lbs]	6 Nm [53 in-lbs]
Maximum Moment $\mathbf{M_Z}$	41 Nm [363 in-lbs]	6 Nm [53 in-lbs]

†Capacities are per set of jaws and are not simultaneous

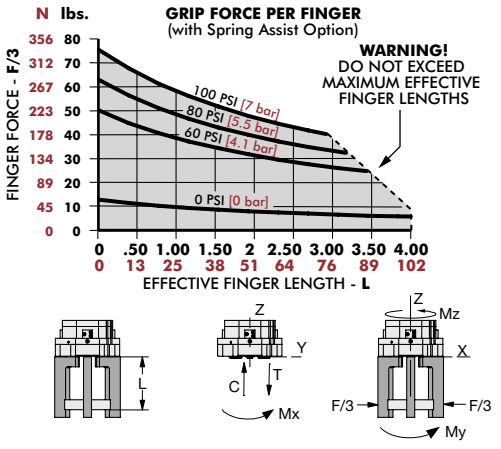

RTH-2M-L	Static	Dynamic
Maximum Tensile **T**	1080 N [243 lbs]	84 N [19 lbs]
Maximum Compressive **C**	1400 N [315 lbs]	84 N [19 lbs]
Maximum Moment $\mathbf{M_X}$	40 Nm [354 in-lbs]	3 Nm [27 in-lbs]
Maximum Moment $\mathbf{M_Y}$	52 Nm [460 in-lbs]	4 Nm [35 in-lbs]
Maximum Moment $\mathbf{M_Z}$	33 Nm [292 in-lbs]	4 Nm [35 in-lbs]

†Capacities are per set of jaws and are not simultaneous

RTH-3M, -3M-L

3-Jaw Parallel Grippers | Dimensions and Technical Specifications

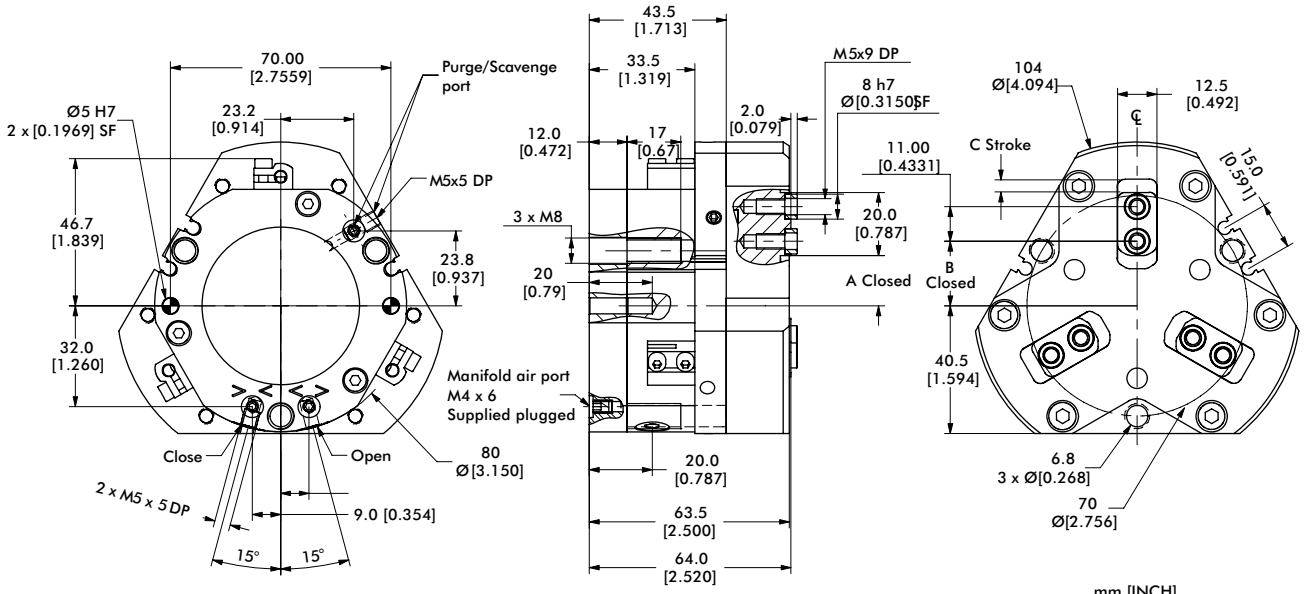

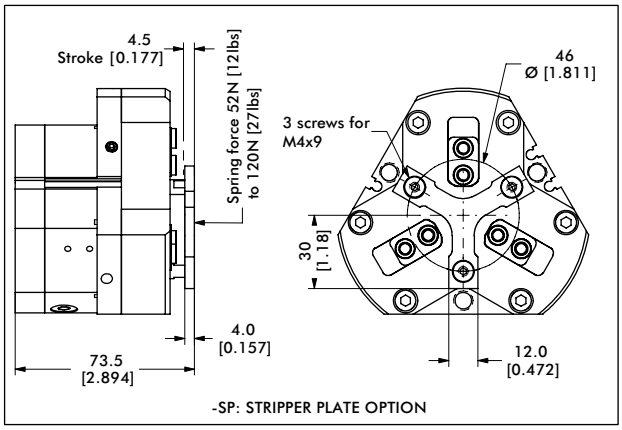

mm [INCH]

THIRD ANGLE PROJECTION

Model	A	B	C
RTH-3M	16.0 [0.630]	20.5 [0.807]	3.9 [0.16]
RTH-3M-L	12.0 [0.742]	16.5 [0.650]	8.0 [0.32]

Dimensions in mm [in]

Seal Repair Kits	RTH-3M
Buna-N Seal Repair Kit	SLKT-349
Buna-N Rear Inlet Seal Repair Kit	SLKT-364
Viton® Seal Repair Kit	SLKT-349V
Viton® Rear Inlet Seal Repair Kit	SLKT-364V

Loading Information

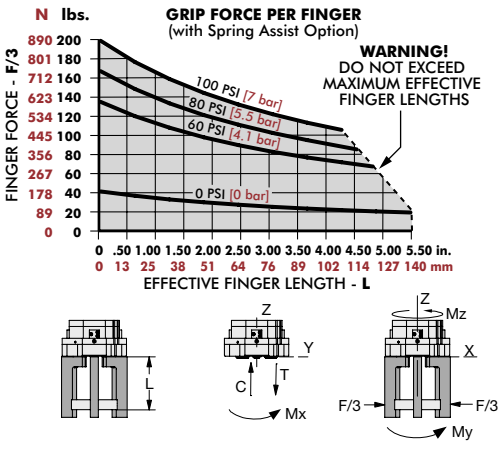

RTH-3M	Static	Dynamic
Maximum Tensile **T**	1680 N [378 lbs]	302 N [68 lbs]
Maximum Compressive **C**	2180 N [490 lbs]	302 N [68 lbs]
Maximum Moment M_x	72 Nm [637 in-lbs]	11 Nm [97 in-lbs]
Maximum Moment **My**	102 Nm [903 in-lbs]	16 Nm [142 in-lbs]
Maximum Moment M_z	66 Nm [584 in-lbs]	16 Nm [142 in-lbs]

†Capacities are per set of jaws and are not simultaneous

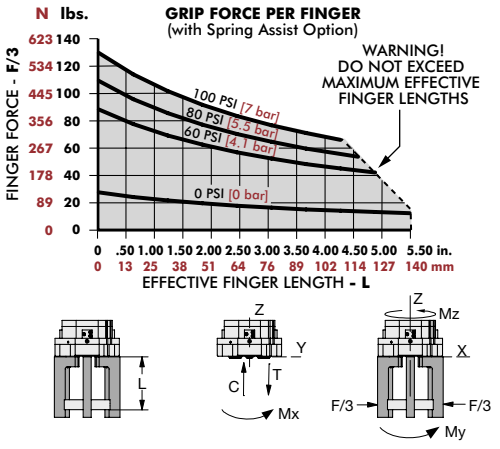

RTH-3M-L	Static	Dynamic
Maximum Tensile **T**	1500 N [337 lbs]	197 N [44 lbs]
Maximum Compressive **C**	1940 N [436 lbs]	197 N [44 lbs]
Maximum Moment M_x	64 Nm [566 in-lbs]	7 Nm [62 in-lbs]
Maximum Moment **My**	81 Nm [717 in-lbs]	9 Nm [80 in-lbs]
Maximum Moment M_z	53 Nm [469 in-lbs]	9 Nm [80 in-lbs]

†Capacities are per set of jaws and are not simultaneous

Dimensions and technical information are subject to change without notice

3-Jaw Parallel Grippers | Dimensions and Technical Specifications

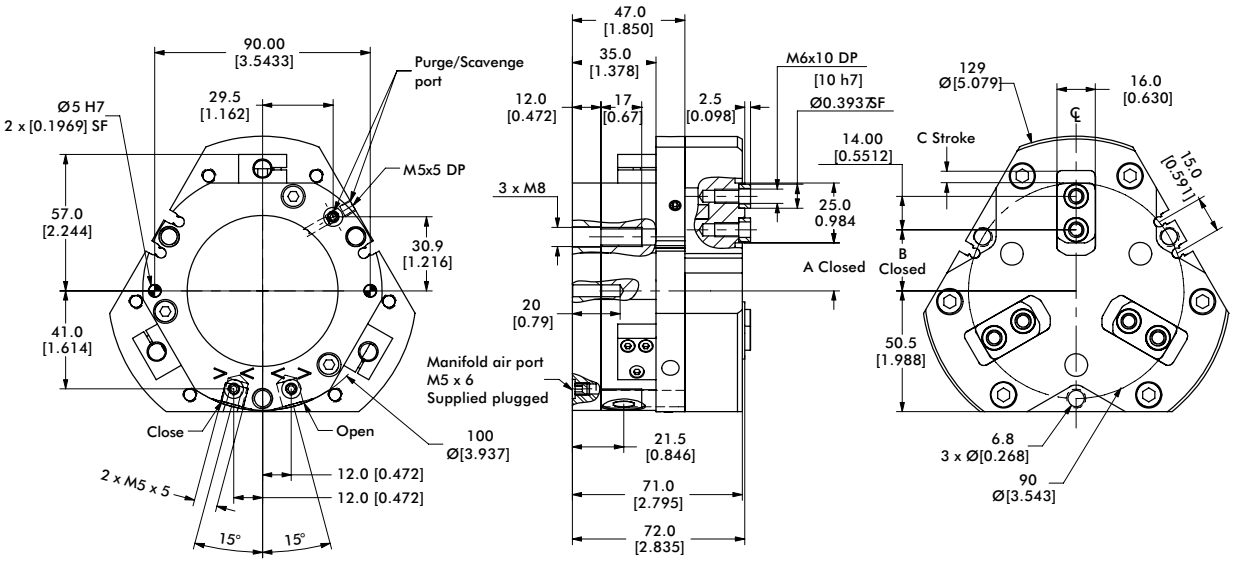

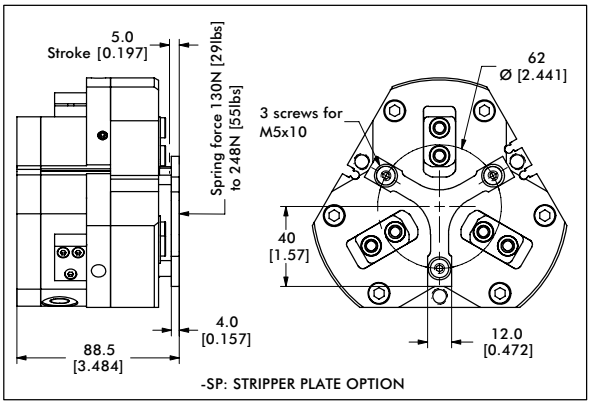

-SP: STRIPPER PLATE OPTION

mm [INCH]

THIRD ANGLE PROJECTION

Model	A	B	C
RTH-4M	20.0 [0.787]	25.5 [1.004]	5.0 [0.20]
RTH-4M-L	15.0 [0.591]	20.5 [0.807]	10.0 [0.40]

Dimensions in mm [in]

Seal Repair Kits	RTH-4M
Buna-N Seal Repair Kit	SLKT-350
Buna-N Rear Inlet Seal Repair Kit	SLKT-365
Viton® Seal Repair Kit	SLKT-350V
Viton® Rear Inlet Seal Repair Kit	SLKT-365V

Loading Information

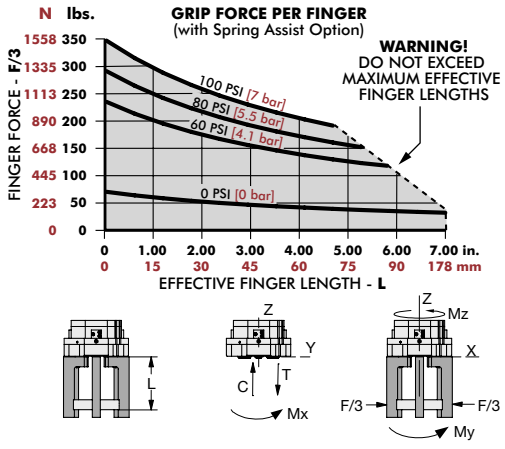

RTH-4M	Static	Dynamic
Maximum Tensile **T**	2110 N [474 lbs]	425 N [96 lbs]
Maximum Compressive **C**	2790 N [627 lbs]	425 N [96 lbs]
Maximum Moment M_x	92 Nm [814 in-lbs]	16 Nm [142 in-lbs]
Maximum Moment M_y	182 Nm [1133 in-lbs]	22 Nm [195 in-lbs]
Maximum Moment M_z	84 Nm [734 in-lbs]	22 Nm [195 in-lbs]

†Capacities are per set of jaws and are not simultaneous

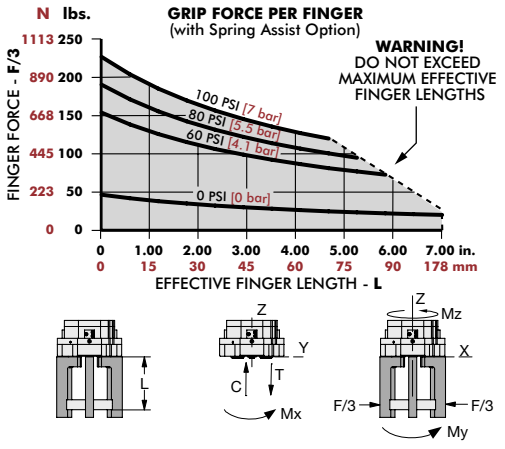

RTH-4M-L	Static	Dynamic
Maximum Tensile **T**	1880 N [423 lbs]	275 N [62 lbs]
Maximum Compressive **C**	2490 N [560 lbs]	275 N [62 lbs]
Maximum Moment M_x	82 Nm [726 in-lbs]	10 Nm [89 in-lbs]
Maximum Moment M_y	102 Nm [903 in-lbs]	13 Nm [115 in-lbs]
Maximum Moment M_z	67 Nm [593 in-lbs]	13 Nm [115 in-lbs]

†Capacities are per set of jaws and are not simultaneous

RTH-5M, -5M-L

3-Jaw Parallel Grippers | Dimensions and Technical Specifications

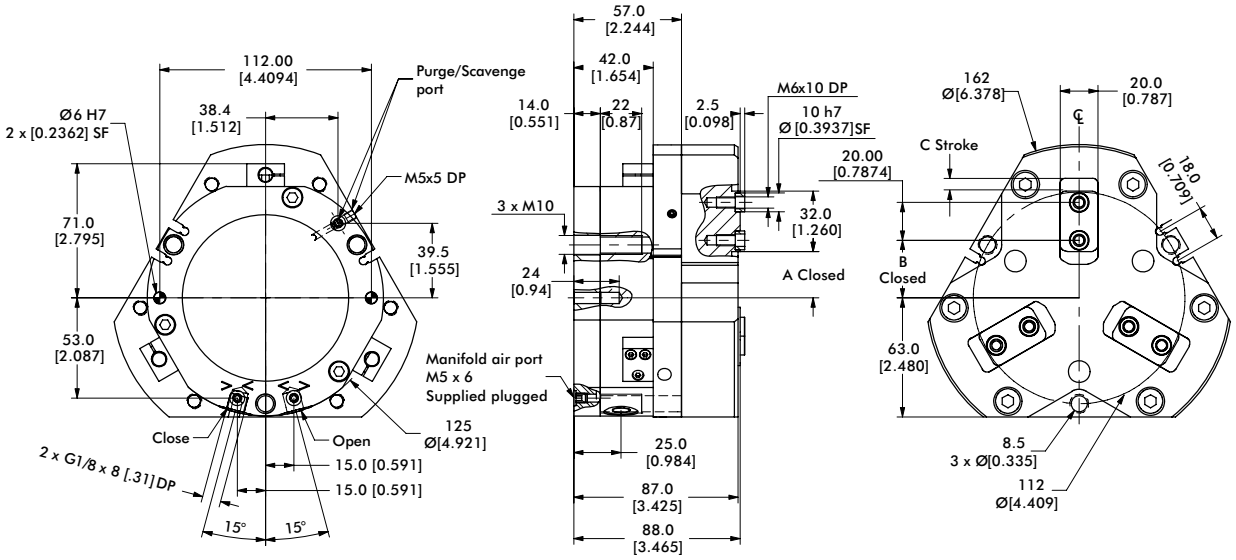

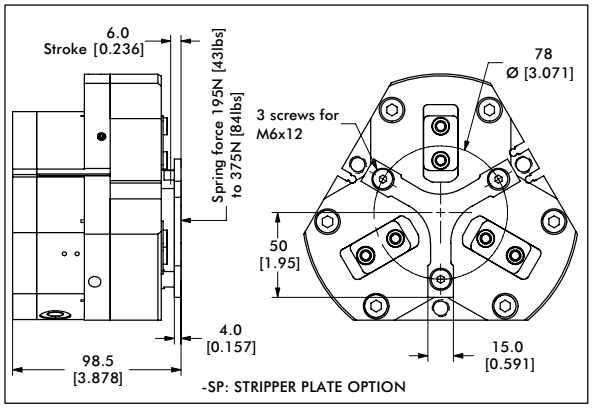

mm [INCH]

THIRD ANGLE PROJECTION

Model	A	B	C
RTH-5M	24.5 [0.965]	30.5 [1.201]	6.5 [0.26]
RTH-5M-L	18.0 [0.709]	24.0 [0.945]	13.0 [0.51]

Dimensions in mm [in]

Seal Repair Kits	RTH-5 M
Buna-N Seal Repair Kit	SLKT-351
Buna-N Rear Inlet Seal Repair Kit	SLKT-365
Viton® Seal Repair Kit	SLKT-351V
Viton® Rear Inlet Seal Repair Kit	SLKT-365V

Loading Information

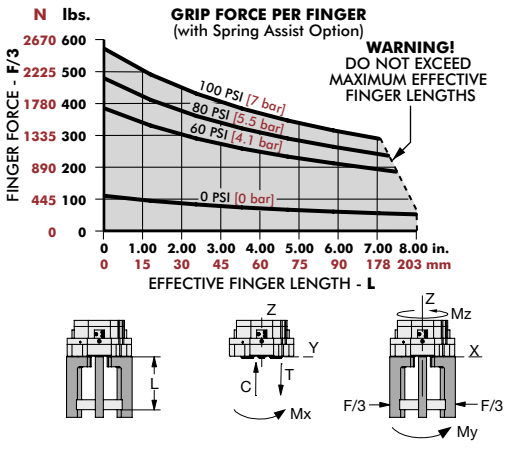

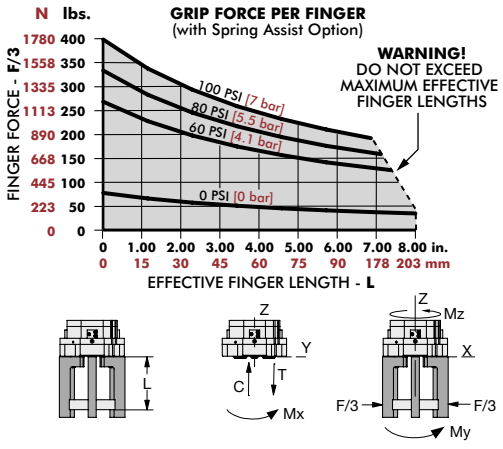

RTH-5M	Static	Dynamic
Maximum Tensile **T**	2990 N [672 lbs]	674 N [152 lbs]
Maximum Compressive **C**	3980 N [895 lbs]	674 N [152 lbs]
Maximum Moment $\mathbf{M_x}$	127 Nm [1124 in-lbs]	25 Nm [221 in-lbs]
Maximum Moment **My**	179 Nm [1584 in-lbs]	35 Nm [310 in-lbs]
Maximum Moment $\mathbf{M_z}$	117 Nm [1036 in-lbs]	35 Nm [310 in-lbs]

†Capacities are per set of jaws and are not simultaneous

RTH-5M-L	Static	Dynamic
Maximum Tensile **T**	2680 N [602 lbs]	432 N [97 lbs]
Maximum Compressive **C**	3570 N [803 lbs]	432 N [97 lbs]
Maximum Moment $\mathbf{M_x}$	114 Nm [1009 in-lbs]	16 Nm [142 in-lbs]
Maximum Moment **My**	144 Nm [1275 in-lbs]	20 Nm [177 in-lbs]
Maximum Moment $\mathbf{M_z}$	94 Nm [832 in-lbs]	20 Nm [177 in-lbs]

†Capacities are per set of jaws and are not simultaneous

RTH-6M, -6M-L

3-Jaw Parallel Grippers | Dimensions and Technical Specifications

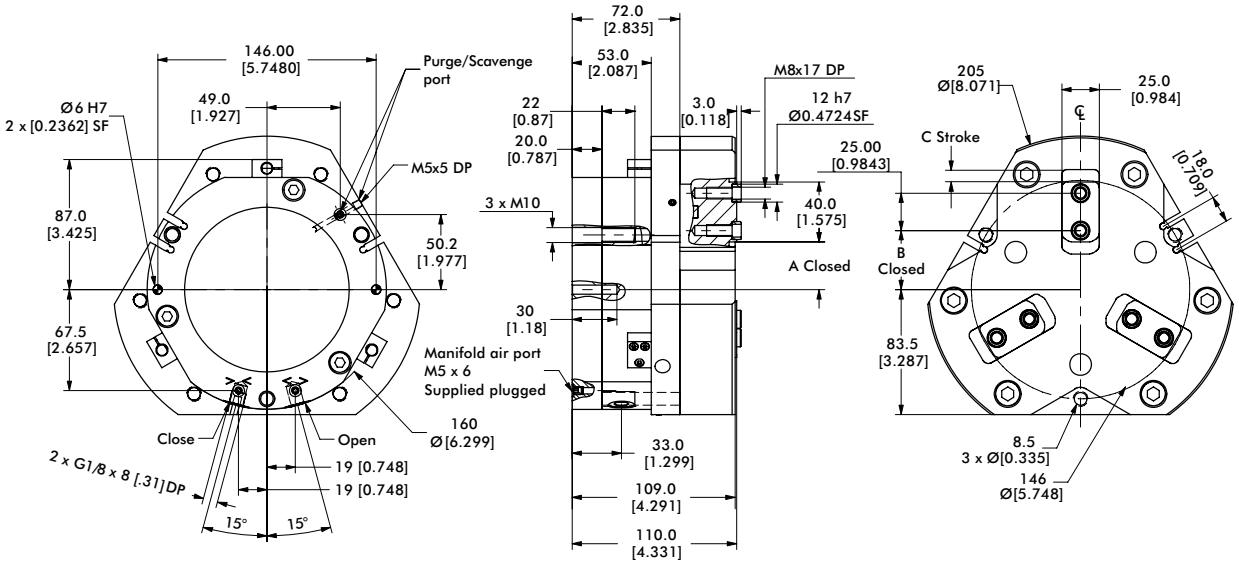

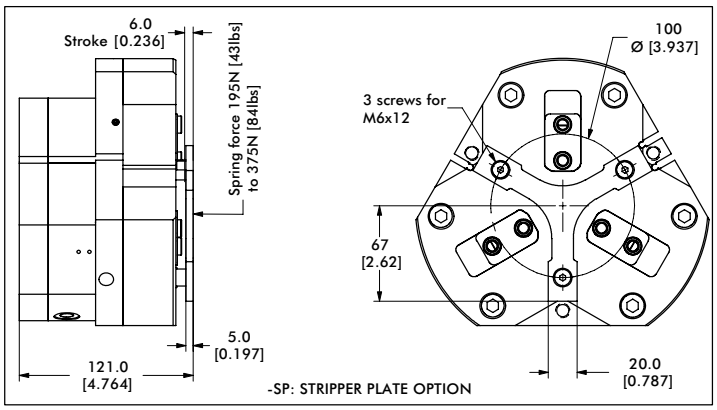

mm [INCH]

THIRD ANGLE PROJECTION

Model	A	B	C
RTH-6M	32.0 [1.260]	39.5 [1.555]	8.0 [0.32]
RTH-6M-L	24.0 [0.945]	31.5 [1.240]	16.0 [0.63]

Dimensions in mm [in]

Seal Repair Kits	RTH-6M
Buna-N Seal Repair Kit	SLKT-352
Buna-N Rear Inlet Seal Repair Kit	SLKT-365
Viton® Seal Repair Kit	SLKT-352V
Viton® Rear Inlet Seal Repair Kit	SLKT-365V

Loading Information

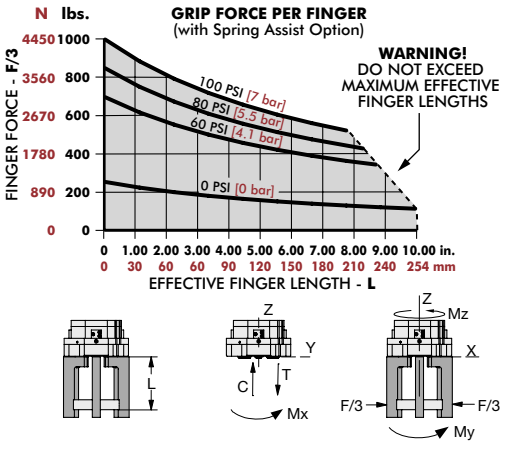

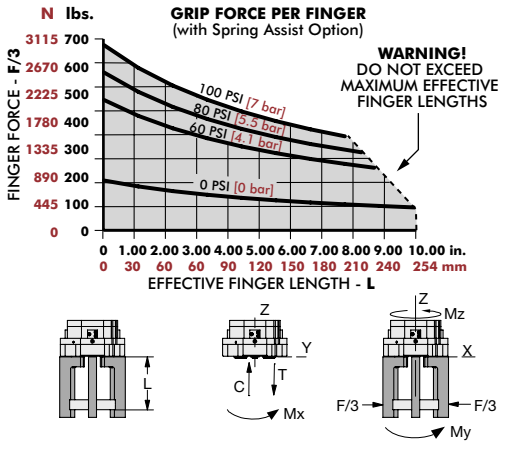

RTH-6M	Static	Dynamic
Maximum Tensile **T**	4320 N [971 lbs]	1315 N [296 lbs]
Maximum Compressive **C**	5810 N [1306 lbs]	1315 N [296 lbs]
Maximum Moment $\mathbf{M_x}$	172 Nm [1522 in-lbs]	45 Nm [398 in-lbs]
Maximum Moment $\mathbf{M_y}$	250 Nm [2213 in-lbs]	65 Nm [575 in-lbs]
Maximum Moment $\mathbf{M_z}$	164 Nm [1452 in-lbs]	65 Nm [575 in-lbs]

†Capacities are per set of jaws and are not simultaneous

RTH-6M-L	Static	Dynamic
Maximum Tensile **T**	3860 N [868 lbs]	852 N [192 lbs]
Maximum Compressive **C**	5180 N [1165 lbs]	852 N [192 lbs]
Maximum Moment $\mathbf{M_x}$	154 Nm [1363 in-lbs]	29 Nm [257 in-lbs]
Maximum Moment $\mathbf{M_y}$	199 Nm [1761 in-lbs]	37 Nm [327 in-lbs]
Maximum Moment $\mathbf{M_z}$	131 Nm [1159 in-lbs]	37 Nm [327 in-lbs]

†Capacities are per set of jaws and are not simultaneous

RTH-7M, -7M-L

3-Jaw Parallel Grippers | Dimensions and Technical Specifications

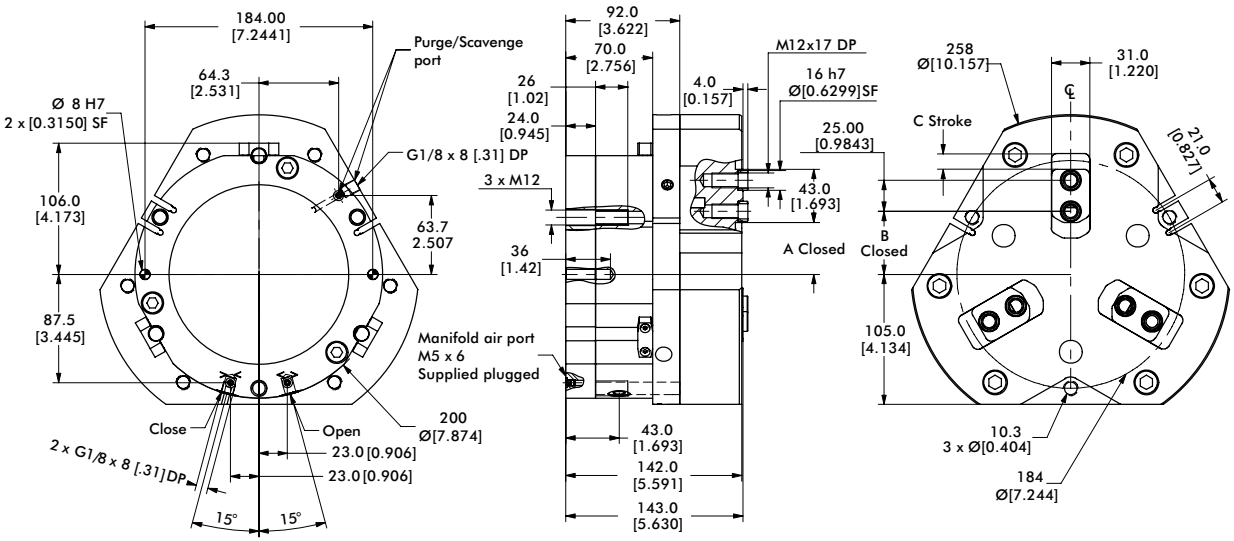

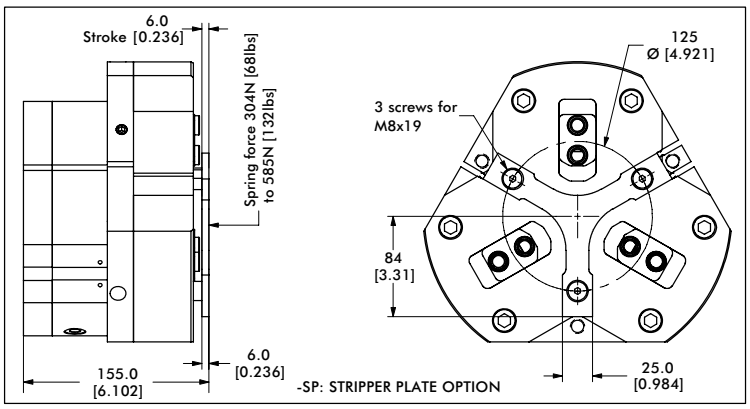

mm [INCH]

THIRD ANGLE PROJECTION

Model	A	B	C
RTH-7M	42.0 [1.654]	51.0 [2.008]	12.4 [0.49]
RTH-7M-L	29.5 [1.161]	38.5 [1.516]	25.0 [0.99]

Dimensions in mm [in]

Seal Repair Kits	RTH-7M
Buna-N Seal Repair Kit	SLKT-353
Buna-N Rear Inlet Seal Repair Kit	SLKT-365
Viton® Seal Repair Kit	SLKT-353V
Viton® Rear Inlet Seal Repair Kit	SLKT-365V

Loading Information

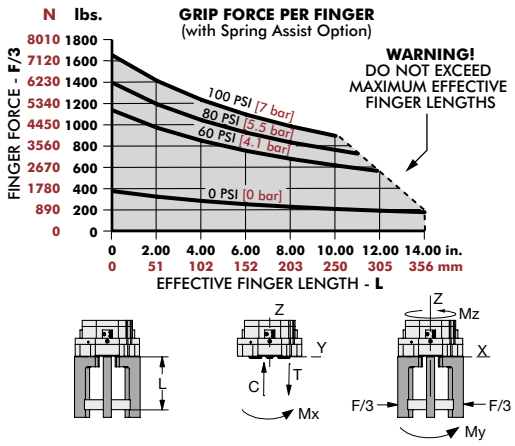

RTH-7M	Static	Dynamic
Maximum Tensile **T**	5400 N [1214 lbs]	1763 N [396 lbs]
Maximum Compressive **C**	7120 N [1601 lbs]	1763 N [396 lbs]
Maximum Moment M_x	215 Nm [1903 in-lbs]	60 Nm [531 in-lbs]
Maximum Moment **My**	305 Nm [2699 in-lbs]	86 Nm [761 in-lbs]
Maximum Moment M_z	208 Nm [1841 in-lbs]	86 Nm [761 in-lbs]

†Capacities are per set of jaws and are not simultaneous

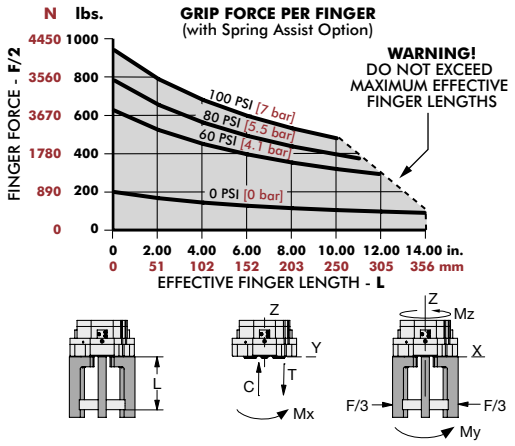

RTH-7M-L	Static	Dynamic
Maximum Tensile **T**	4690 N [1054 lbs]	1141 N [257 lbs]
Maximum Compressive **C**	6180 N [1389 lbs]	1141 N [257 lbs]
Maximum Moment M_x	186 Nm [1646 in-lbs]	39 Nm [345 in-lbs]
Maximum Moment **My**	230 Nm [2036 in-lbs]	48 Nm [425 in-lbs]
Maximum Moment M_z	156 Nm [1381 in-lbs]	48 Nm [425 in-lbs]

†Capacities are per set of jaws and are not simultaneous

Dimensions and technical information are subject to change without notice

RTH-8M, -8M-L

3-Jaw Parallel Grippers | Dimensions and Technical Specifications

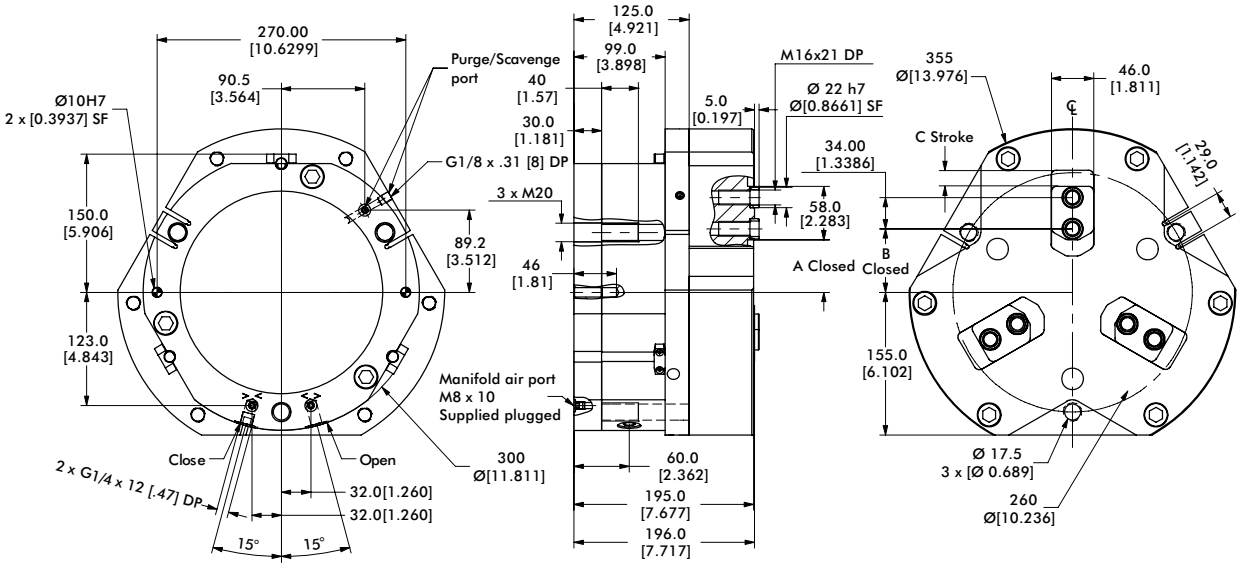

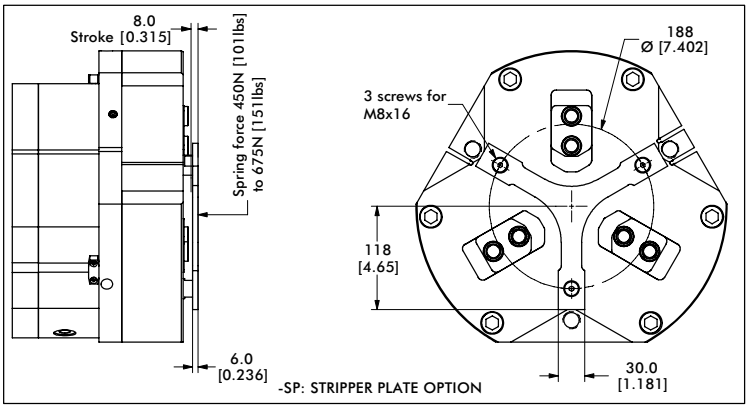

mm [INCH]

THIRD ANGLE PROJECTION

Model	A	B	C
RTH-8M	57.0 [2.244]	69.0 [2.717]	17.7 [0.70]
RTH-8M-L	39.5 [1.555]	51.5 [2.028]	35.1 [1.38]

Dimensions in mm [in]

Seal Repair Kits	RTH-8M
Buna-N Seal Repair Kit	SLKT-354
Buna-N Rear Inlet Seal Repair Kit	SLKT-366
Viton® Seal Repair Kit	SLKT-354V
Viton® Rear Inlet Seal Repair Kit	SLKT-366V

Loading Information

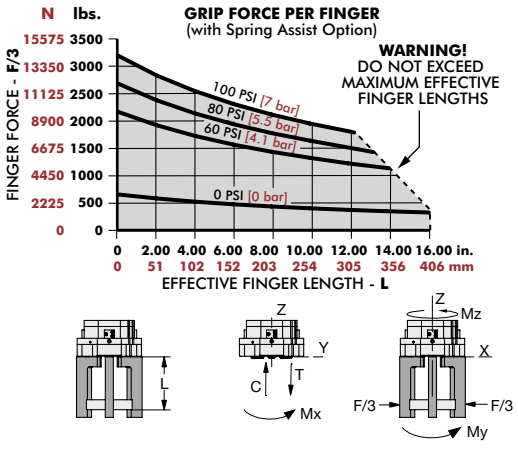

RTH-8M	Static	Dynamic
Maximum Tensile **T**	8230 N [1850 lbs]	2733 N [614 lbs]
Maximum Compressive **C**	10700 N [2405 lbs]	2733 N [614 lbs]
Maximum Moment $\mathbf{M_X}$	455 Nm [4027 in-lbs]	131 Nm [1159 in-lbs]
Maximum Moment **My**	578 Nm [5116 in-lbs]	167 Nm [1478 in-lbs]
Maximum Moment $\mathbf{M_Z}$	362 Nm [3204 in-lbs]	167 Nm [1478 in-lbs]

†Capacities are per set of jaws and are not simultaneous

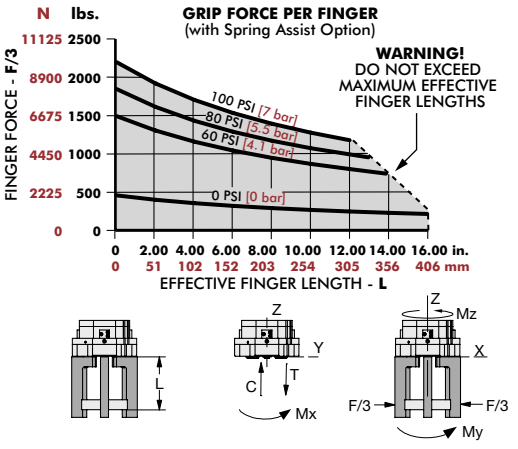

RTH-8M-L	Static	Dynamic
Maximum Tensile **T**	7080 N [1592 lbs]	1772 N [398 lbs]
Maximum Compressive **C**	9210 N [2070 lbs]	1772 N [398 lbs]
Maximum Moment $\mathbf{M_X}$	391 Nm [3461 in-lbs]	85 Nm [752 in-lbs]
Maximum Moment **My**	428 Nm [3788 in-lbs]	93 Nm [823 in-lbs]
Maximum Moment $\mathbf{M_Z}$	268 Nm [2372 in-lbs]	93 Nm [823 in-lbs]

†Capacities are per set of jaws and are not simultaneous

PPC SERIES

3-Jaw Parallel Grippers | Features and Benefits | How To Order

Features:

- Multipurpose robust gripper with high repeatability
- Through-hole design for 3rd party tooling, imaging, part ejectors, hoses and sensing.
- Spring assist option maintains grip in case of air pressure loss
- Grip force range from 1474N to 4332N
- Repeatability of +/-0.02mm

Applications:

- Feed thru work piece applications
- Optical workpiece inspection via center hole
- Part feed/ejection, part cleaning, part presence



(USB key shown for scale)

How To Order

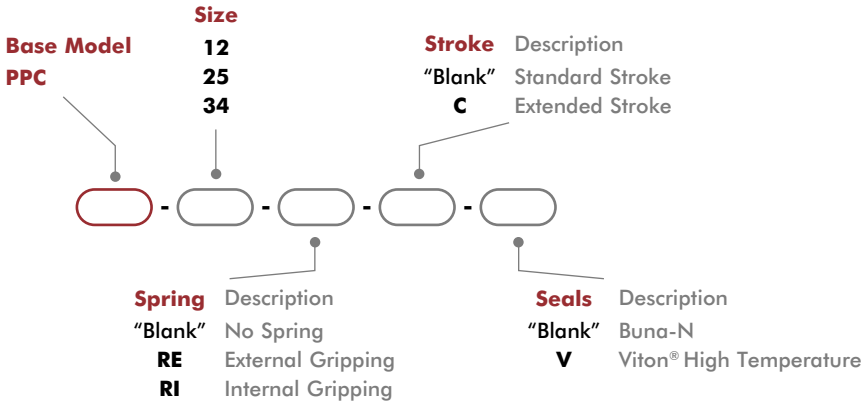

Accessories

Sensor Accessories	Model Numbers	Part Number	Qty/Unit
Inductive Sensor Mounting Kit (1 Holder, 1 Flag, 2 Spacers)	PPC-12	OSMK-105	1-2
Inductive Sensor Mounting Kit (1 Holder, 1 Flag, 2 Spacers)	PPC-25	OSMK-106	1-2
Inductive Sensor Mounting Kit (1 Holder, 1 Flag, 2 Spacers)	PPC-34	OSMK-107	1-2
NPN Inductive Sensor with Quick Disconnect*	All Models	OISN-011	1-4
PNP Inductive Sensor with Quick Disconnect*	All Models	OISP-011	1-4
Quick Disconnect Cable (2 meters long)*	All Models	CABL-010	1-4
Quick Disconnect Cable (5 meters long)*	All Models	CABL-013	1-4

*Sensor and cable sold separately.

Specifications	Units	12	12-C	25	25-C
Total Rated Grip Force **F** @ 100 psi [7 bar]*	N [lbs]	1474 [331]	896 [201]	2620 [589]	1642 [369]
Total Stroke	mm [in]	10 [0.394]	16 [0.630]	13 [0.512]	20 [0.787]
Weight	kg [lbs]	1.0 [2.2]	1.1 [2.4]	2.2 [4.9]	2.3 [5.1]
Pressure Range (without spring)	bar [psi]	2-7 [30-100]			
Pressure Range (with spring)	bar [psi]	3-7 [45-100]			
Ingress Protection Class (IP)		IP54			
Displacement	cm^3 [in^3]	23 [1.40]		51 [3.11]	
Temperature Range (Buna-N seals)	°C [°F]	-35°~80° [-30°~180°]			
Temperature Range (Viton® seals)	°C [°F]	-30°~150° [-20°~300°]			
Actuation	sec.	0.03		0.04	
Repeatability	mm [in]	±0.02 [±0.0008]			

*With springs

Specifications	Units	34	34-C
Total Rated Grip Force **F** @ 100 psi [7 bar]*	N [lbs]	4332 [974]	2938 [638]
Total Stroke	mm [in]	20 [0.787]	30 [1.181]
Weight	kg [lbs]	5.1 [11.2]	5.3 [11.7]
Pressure Range (without spring)	bar [psi]	2-7 [30-100]	
Pressure Range (with spring)	bar [psi]	3-7 [45-100]	
Ingress Protection Class (IP)		IP54	
Displacement	cm^3 [in^3]	128 [7.81]	
Temperature Range (Buna-N seals)	°C [°F]	-35°~80° [-30°~180°]	
Temperature Range (Viton® seals)	°C [°F]	-30°~150° [-20°~300°]	
Actuation	sec.	0.06	
Repeatability	mm [in]	±0.02 [±0.0008]	

*With springs

PPC-12, -12-C

3-Jaw Parallel Grippers | Dimensions and Technical Specifications

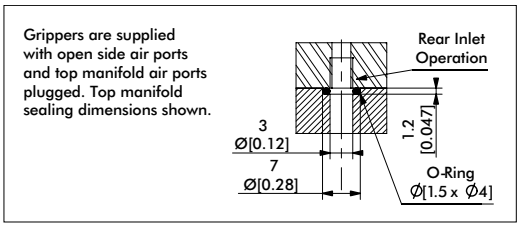

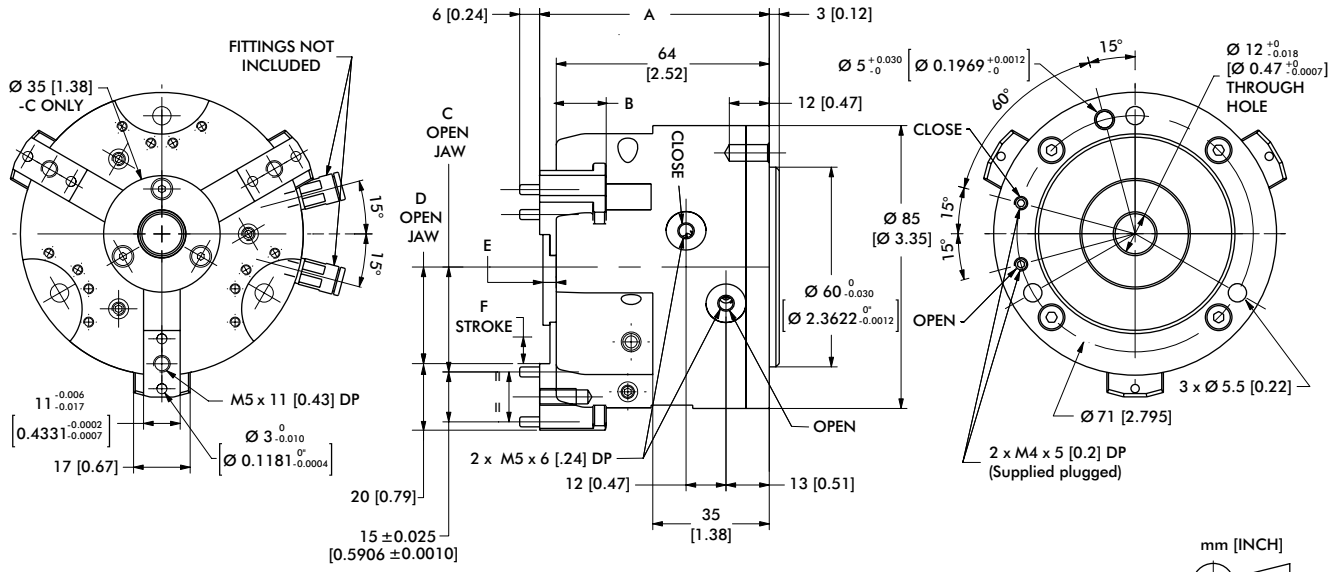

mm [INCH]

THIRD ANGLE PROJECTION

Model	A	B	C	D	E	F
PPC-12	65 [2.56]	64 [2.52]	25.5 [1.004]	23 [0.906]	--	5 [0.2]
PPC-12-C	69 [2.72]	64 [2.52]	31.5 [1.241]	29.03 [1.143]	4 [0.16]	8 [0.31]

Dimensions in mm [in]

Loading Information

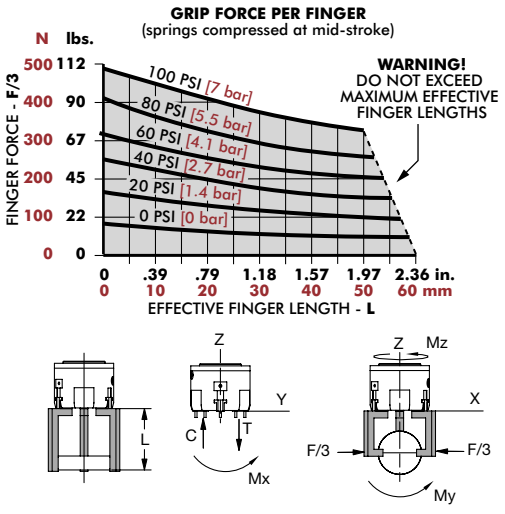

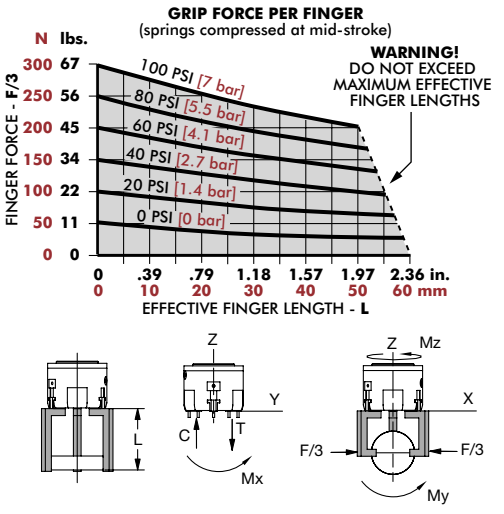

PPC-12	Static	Dynamic
Maximum Tensile **T**	850 N [191 lbs]	220 N [49 lbs]
Maximum Compressive **C**	1150 N [259 lbs]	220 N [49 lbs]
Maximum Moment M_x	20 Nm [177 in-lbs]	6 Nm [53 in-lbs]
Maximum Moment M_y	20 Nm [177 in-lbs]	6 Nm [53 in-lbs]
Maximum Moment M_z	50 Nm [443 in-lbs]	10 Nm [89 in-lbs]

†Capacities are per set of jaws and are not simultaneous

PPC-12-C	Static	Dynamic
Maximum Tensile **T**	[214 lbs] 950 N	220 N [49 lbs]
Maximum Compressive **C**	[281 in-lbs] 1250 N	220 N [49 lbs]
Maximum Moment M_x	[177 in-lbs] 20 Nm	6 Nm [53 in-lbs]
Maximum Moment M_y	[177 in-lbs] 20 Nm	6 Nm [53 in-lbs]
Maximum Moment M_z	[531 in-lbs] 60 Nm	10 Nm [89 in-lbs]

†Capacities are per set of jaws and are not simultaneous

3-Jaw Parallel Grippers | Dimensions and Technical Specifications

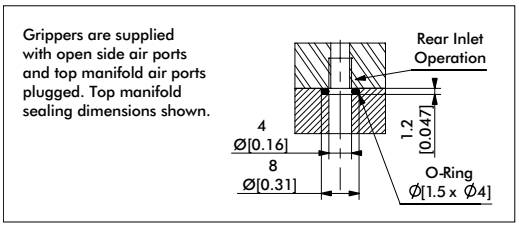

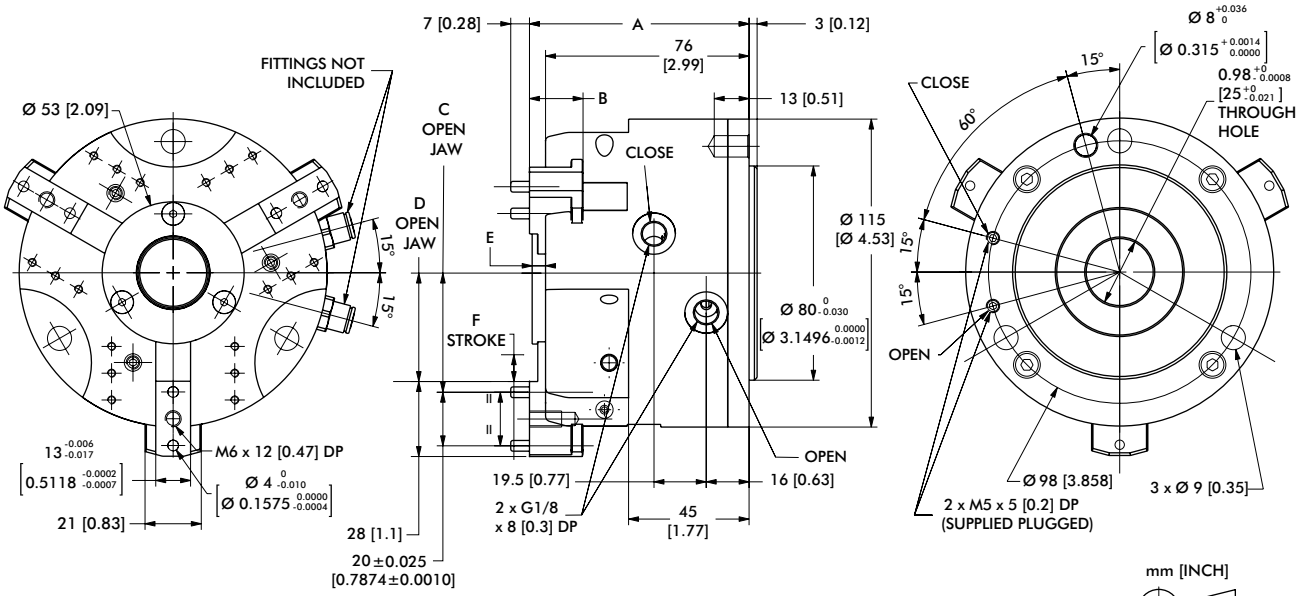

mm [INCH]

THIRD ANGLE PROJECTION

Model	A	B	C	D	E	F
PPC-25	77 [3.03]	76 [2.99]	37.5 [1.476]	33.5 [1.319]	--	6.5 [0.26]
PPC-25-C	82 [3.23]	76 [2.99]	44.5 [1.792]	40.5 [1.594]	5 [0.2]	10 [0.39]

Dimensions in mm [in]

Loading Information

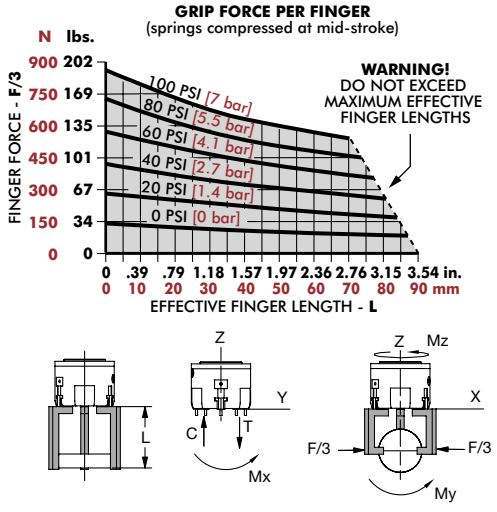

PPC-25	Static	Dynamic
Maximum Tensile **T**	1300 N [292 lbs]	390 N [88 lbs]
Maximum Compressive **C**	1500 N [337 lbs]	390 N [88 lbs]
Maximum Moment M_x	30 Nm [266 in-lbs]	13 Nm [115 in-lbs]
Maximum Moment M_y	30 Nm [266 in-lbs]	13 Nm [115 in-lbs]
Maximum Moment M_z	65 Nm [575 in-lbs]	25 Nm [221 in-lbs]

†Capacities are per set of jaws and are not simultaneous

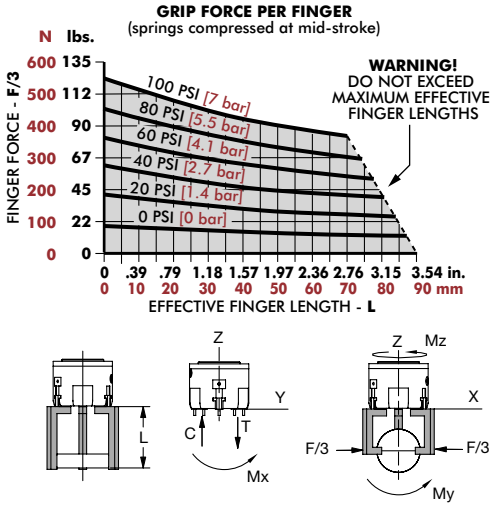

PPC-25-C	Static	Dynamic
Maximum Tensile **T**	1300 N [292 lbs]	390 N [88 lbs]
Maximum Compressive **C**	1500 N [337 lbs]	390 N [88 lbs]
Maximum Moment M_x	30 Nm [266 in-lbs]	13 Nm [115 in-lbs]
Maximum Moment M_y	30 Nm [266 in-lbs]	13 Nm [115 in-lbs]
Maximum Moment M_z	70 Nm [620 in-lbs]	25 Nm [221 in-lbs]

†Capacities are per set of jaws and are not simultaneous

PPC-34, -34-C

3-Jaw Parallel Grippers | Dimensions and Technical Specifications

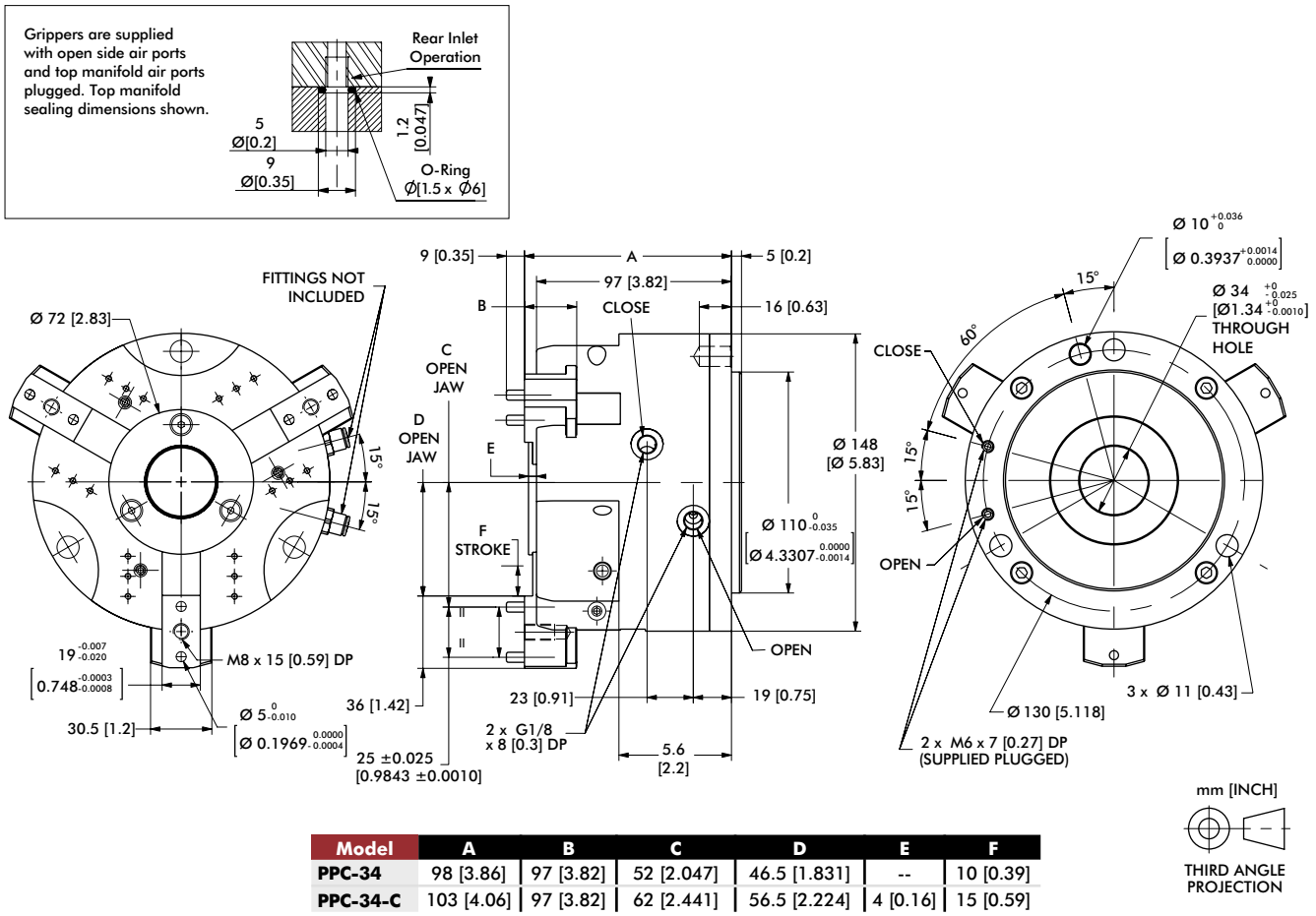

Model	A	B	C	D	E	F
PPC-34	98 [3.86]	97 [3.82]	52 [2.047]	46.5 [1.831]	--	10 [0.39]
PPC-34-C	103 [4.06]	97 [3.82]	62 [2.441]	56.5 [2.224]	4 [0.16]	15 [0.59]

Dimensions in mm [in]

Loading Information

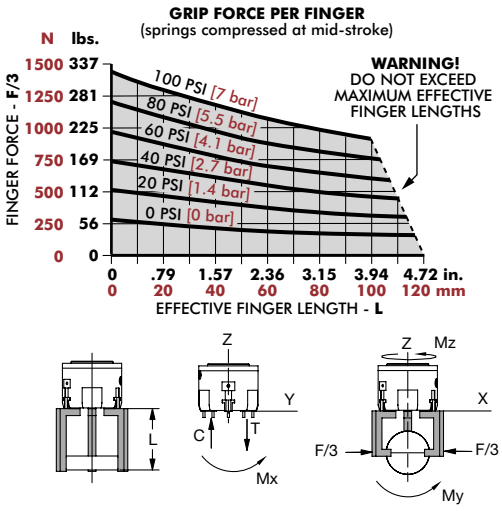

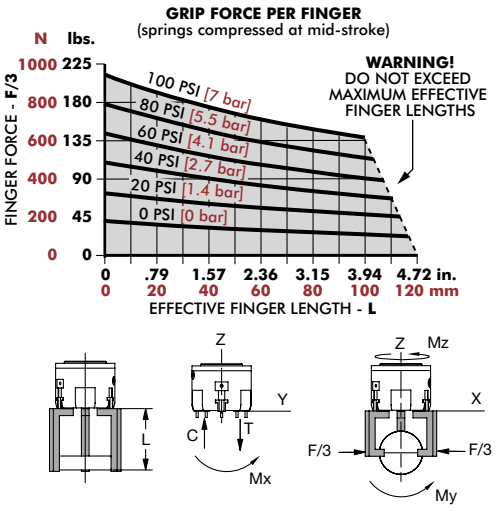

PPC-34	Static	Dynamic
Maximum Tensile **T**	1950 N [438 lbs]	650 N [146 lbs]
Maximum Compressive **C**	2150 N [483 lbs]	650 N [146 lbs]
Maximum Moment M_x	65 Nm [575 in-lbs]	32 Nm [283 in-lbs]
Maximum Moment M_y	65 Nm [575 in-lbs]	32 Nm [283 in-lbs]
Maximum Moment M_z	100 Nm [885 in-lbs]	55 Nm [487 in-lbs]

†Capacities are per set of jaws and are not simultaneous

PPC-34-C	Static	Dynamic
Maximum Tensile **T**	2150 N [438 lbs]	650 N [146 lbs]
Maximum Compressive **C**	2350 N [528 lbs]	650 N [146 lbs]
Maximum Moment M_x	65 Nm [575 in-lbs]	32 Nm [283 in-lbs]
Maximum Moment M_y	65 Nm [575 in-lbs]	32 Nm [283 in-lbs]
Maximum Moment M_z	120 Nm [1062 in-lbs]	55 Nm [487 in-lbs]

†Capacities are per set of jaws and are not simultaneous

Notes

REP3 SERIES

3-Jaw Parallel Grippers | Features and Benefits | How To Order

Features:

- Multipurpose robust gripper with high repeatability
- Spring assist option maintains grip in case of air pressure loss
- Uses inductive or magneto resistive sensors for sensing jaw position
- Grip force range from 771N to 2235N
- Purge and scavenge ports for harsh & clean environments
- Repeatability of +/-0.02mm

Applications:

- Long cycle life requirements
- High vibration environments
- Pick and place, part feeds



How To Order

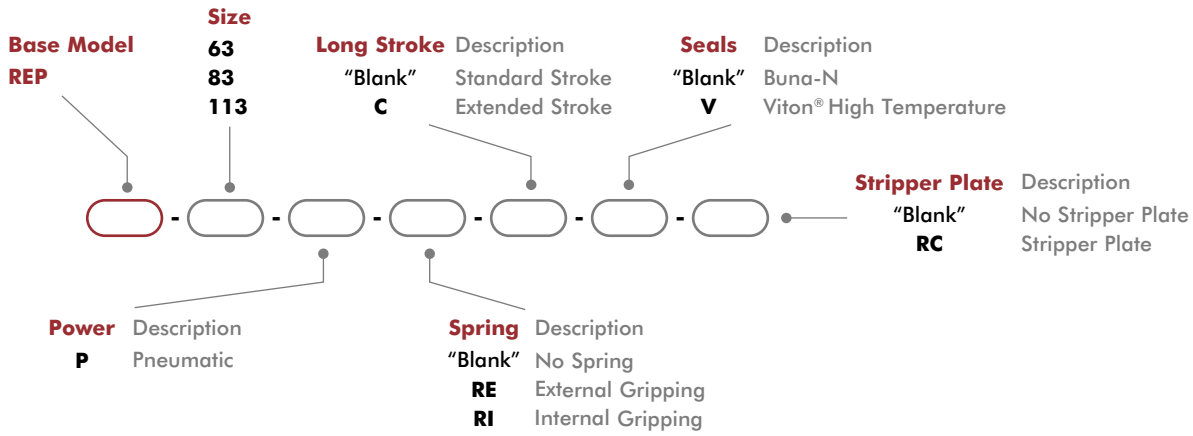

Accessories

Sensor Accessories	Model Numbers	Part Number	Qty/Unit
NPN Inductive Sensor with M8 Quick Disconnect*	All Models	OISN-011	1-4
PNP Inductive Sensor with M8 Quick Disconnect*	All Models	OISP-011	1-4
NPN Magneto Resistive Sensor with Quick Disconnect*	All Models	OHSN-006	1-2
PNP Magneto Resistive Sensor with Quick Disconnect*	All Models	OHSP-006	1-2
NPN Magneto Resistive Sensor (Short Barrel) with Qk Disconnect*	All Models	OHSN-017	1-2
PNP Magneto Resistive Sensor (Short Barrel) with Qk Disconnect*	All Models	OHSP-017	1-2
M8 Quick Disconnect 2 Meter Cable Length*	All Models	CABL-010	1-4
M8 Quick Disconnect 2 Meter Cable Length*	All Models	CABL-013	1-4
Inductive Sensor Mounting Kit (1 holder, 1 flag, 2 spacers)	63	OSMK-105	1-2
Inductive Sensor Mounting Kit (1 holder, 1 flag, 2 spacers)	83	OSMK-106	1-2
Inductive Sensor Mounting Kit (1 holder, 1 flag, 2 spacers)	113	OSMK-107	1-2

*Sensor and cable sold separately. †The gripper comes with adjustable slots for two magnetic sensors (to control jaw position). Must be used with the **-RE** or **-RI** option.

Dimensions and technical information are subject to change without notice

Specifications	Units	63	63-C	83	83-C	113	113-C
Total Rated Grip Force **F** @ 100 psi [7 bar]*	N [lbs]	753 [169]	469 [105]	2077 [467]	1341 [301]	3268 [735]	2180 [490]
Total Stroke	mm [in]	10 [0.394]	16 [0.630]	13 [0.512]	20 [0.787]	20 [0.787]	30 [1.181]
Weight	kg [lbs]	0.55 [1.2]		0.9 [2.0]		2.45 [5.4]	
Pressure Range w/o Spring	bar [psi]	2-7 [30-100]					
Pressure Range with Spring	bar [psi]	3-7 [45-100]					
Ingress Protection Class (IP)		IP55					
Displacement	cm^3 [in^3]	12 [0.72]		35 [2.13]		87 [5.31]	
Temperature Range (Buna-N seals)	°C [°F]	-35°~80° [-30°~180°]					
Temperature Range (Viton® seals)	°C [°F]	-30°~150° [-20°~300°]					
Actuation (open/close)	sec.	0.10		0.18		0.35	
Accuracy	mm [in]	±0.05 [±0.002]					
Repeatability	mm [in]	±0.02 [±0.0008]					
Valve to Actuate Single Acting		3-way, 2-position					
Valve to Actuate Double Acting		4-way, 2-position					

* with springs

REP-63, -63-C

3-Jaw Parallel Grippers | Dimensions and Technical Specifications

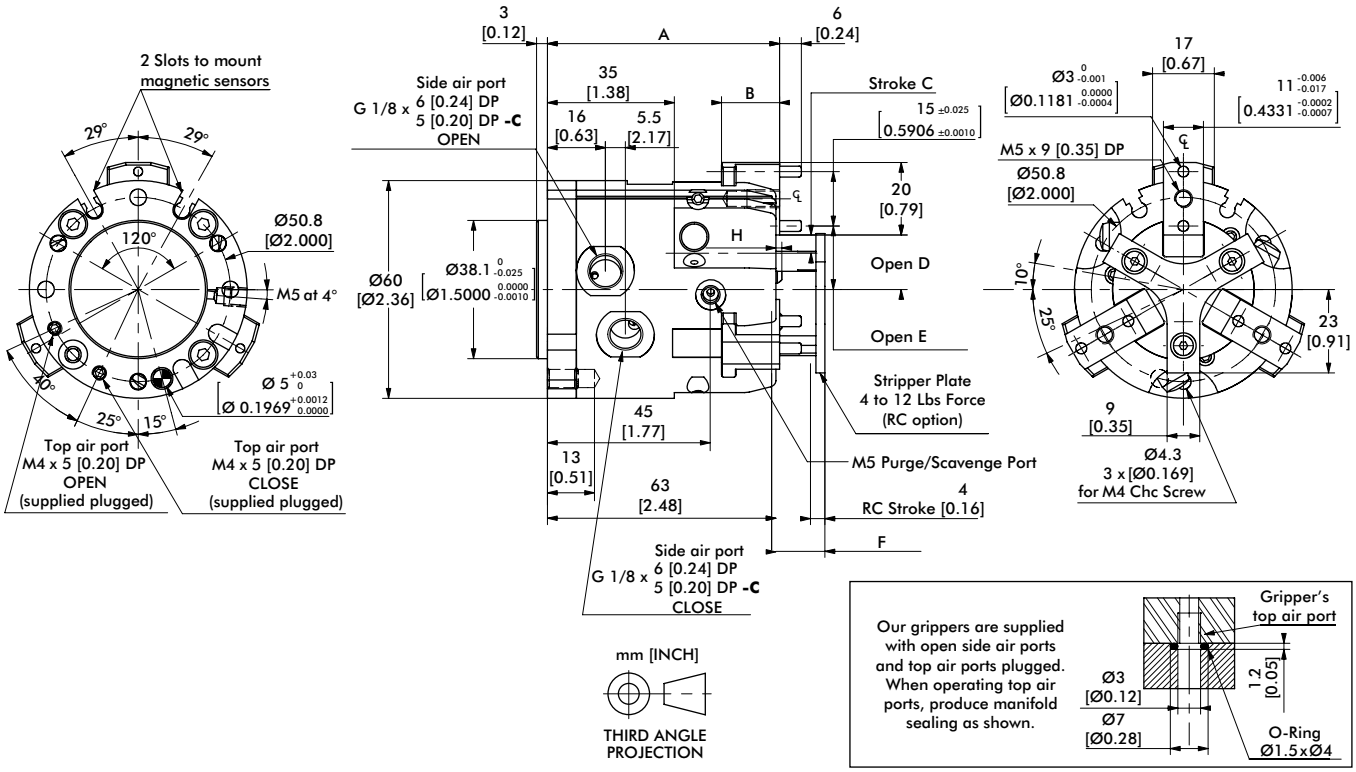

Model	A	B	C	D	E	F	H
REP-63	62 [2.52]	16 [0.63]	5 [0.20]	15 [0.59]	17.5 [0.689]	13.5 [0.531]	1.6 [0.06]
REP-63-C	68 [2.68]	20 [0.79]	8 [0.31]	21 [0.83]	23.5 [0.926]	17.5 [0.689]	5.6 [0.22]

Dimensions in mm [in]

Seal Repair Kits	REP-63
Buna-N Seal Repair Kit	SLKT-155
Viton® Seal Repair Kit	SLKT-155V

Loading Information

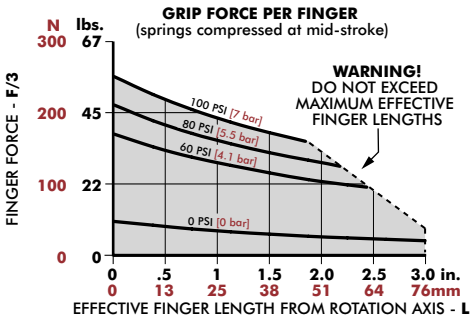

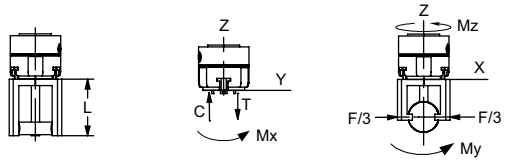

REP-63	Static
Maximum Tensile **T**	860 N [193 lbs]
Maximum Compressive **C**	1150 N [259 lbs]
Maximum Moment M_x	18 Nm [159 in-lbs]
Maximum Moment M_y	30 Nm [266 in-lbs]
Maximum Moment M_z	30 Nm [44 in-lbs]

†Capacities are per set of jaws and are not simultaneous

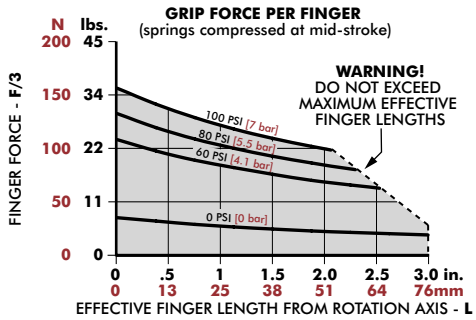

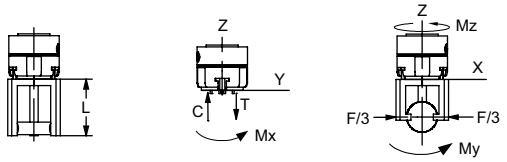

REP-63-C	Static
Maximum Tensile **T**	860 N [193 lbs]
Maximum Compressive **C**	1150 N [259 lbs]
Maximum Moment M_x	15 Nm [133 in-lbs]
Maximum Moment M_y	30 Nm [266 in-lbs]
Maximum Moment M_z	50 Nm [443 in-lbs]

†Capacities are per set of jaws and are not simultaneous

REP-83, -83-C

3-Jaw Parallel Grippers | Dimensions and Technical Specifications

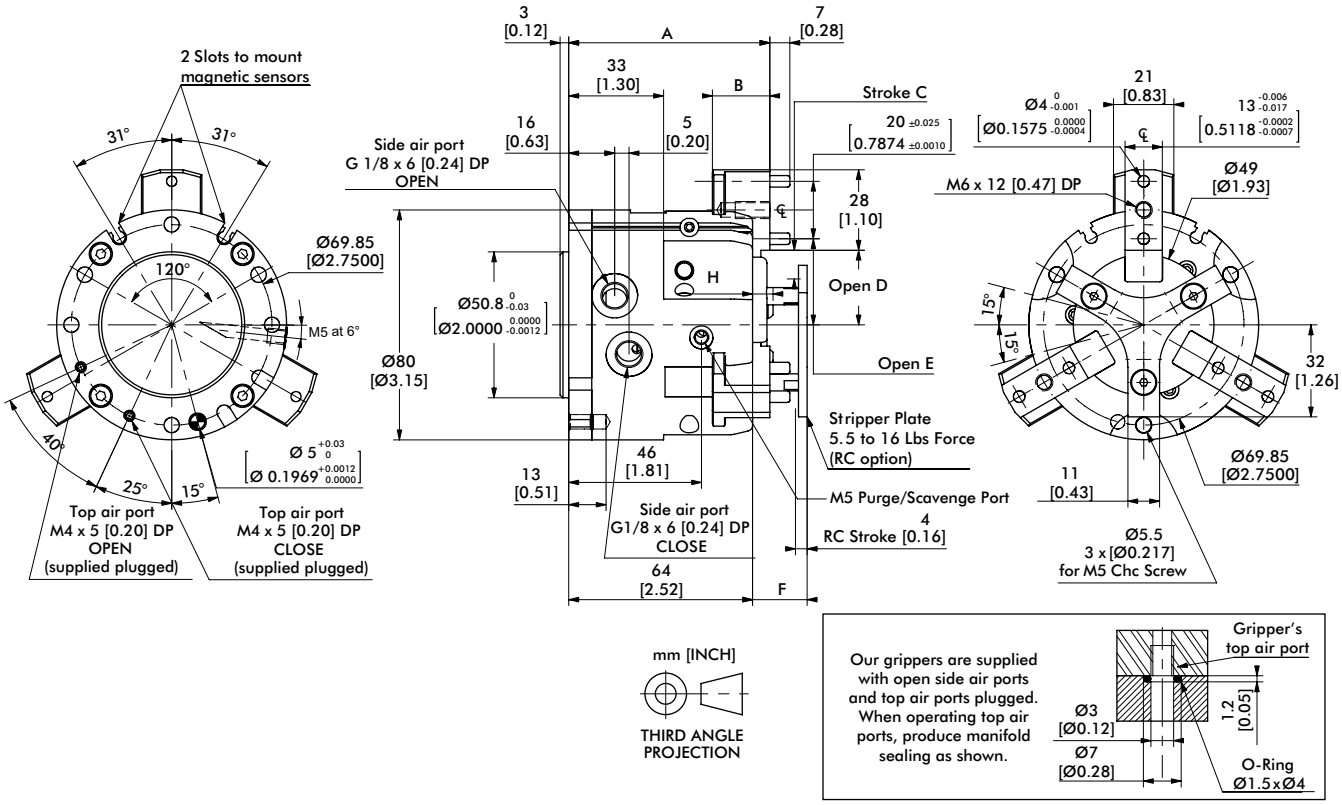

Model	A	B	C	D	E	F	H
REP-83	65 [2.56]	15 [0.59]	6.5 [0.256]	19 [0.75]	23 [0.91]	14 [0.55]	2.1 [0.08]
REP-83-C	70 [2.76]	20 [0.79]	10 [0.39]	26 [1.10]	30 [1.18]	19 [0.75]	7.1 [0.28]

Dimensions in mm [in]

Seal Repair Kits	REP-83
Buna-N Seal Repair Kit	SLKT-157
Viton® Seal Repair Kit	SLKT-157V

Loading Information

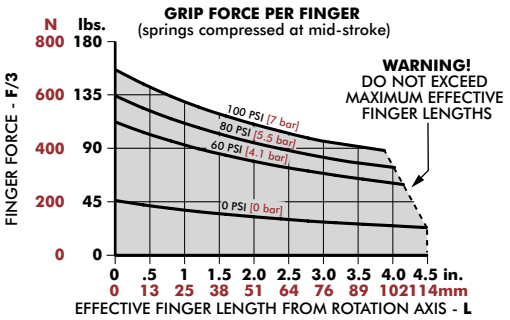

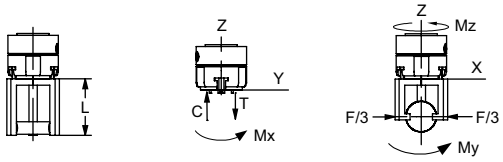

REP-83	Static
Maximum Tensile **T**	1250 N [281 lbs]
Maximum Compressive **C**	1400 N [315 lbs]
Maximum Moment M_x	30 Nm [266 in-lbs]
Maximum Moment M_y	55 Nm [487 in-lbs]
Maximum Moment M_z	60 Nm [531 in-lbs]

†Capacities are per set of jaws and are not simultaneous

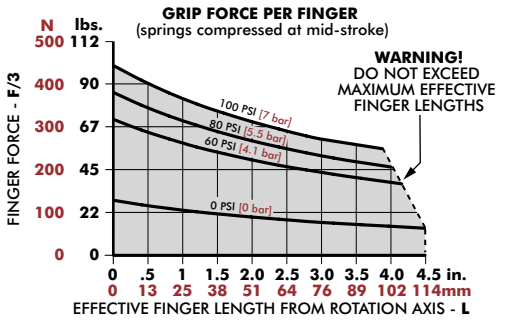

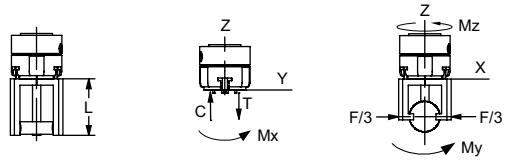

REP-83-C	Static
Maximum Tensile **T**	1210 N [272 lbs]
Maximum Compressive **C**	1360 N [306 lbs]
Maximum Moment M_x	25 Nm [221 in-lbs]
Maximum Moment M_y	50 Nm [443 in-lbs]
Maximum Moment M_z	60 Nm [531 in-lbs]

†Capacities are per set of jaws and are not simultaneous

REP-113, -113-C

3-Jaw Parallel Grippers | Dimensions and Technical Specifications

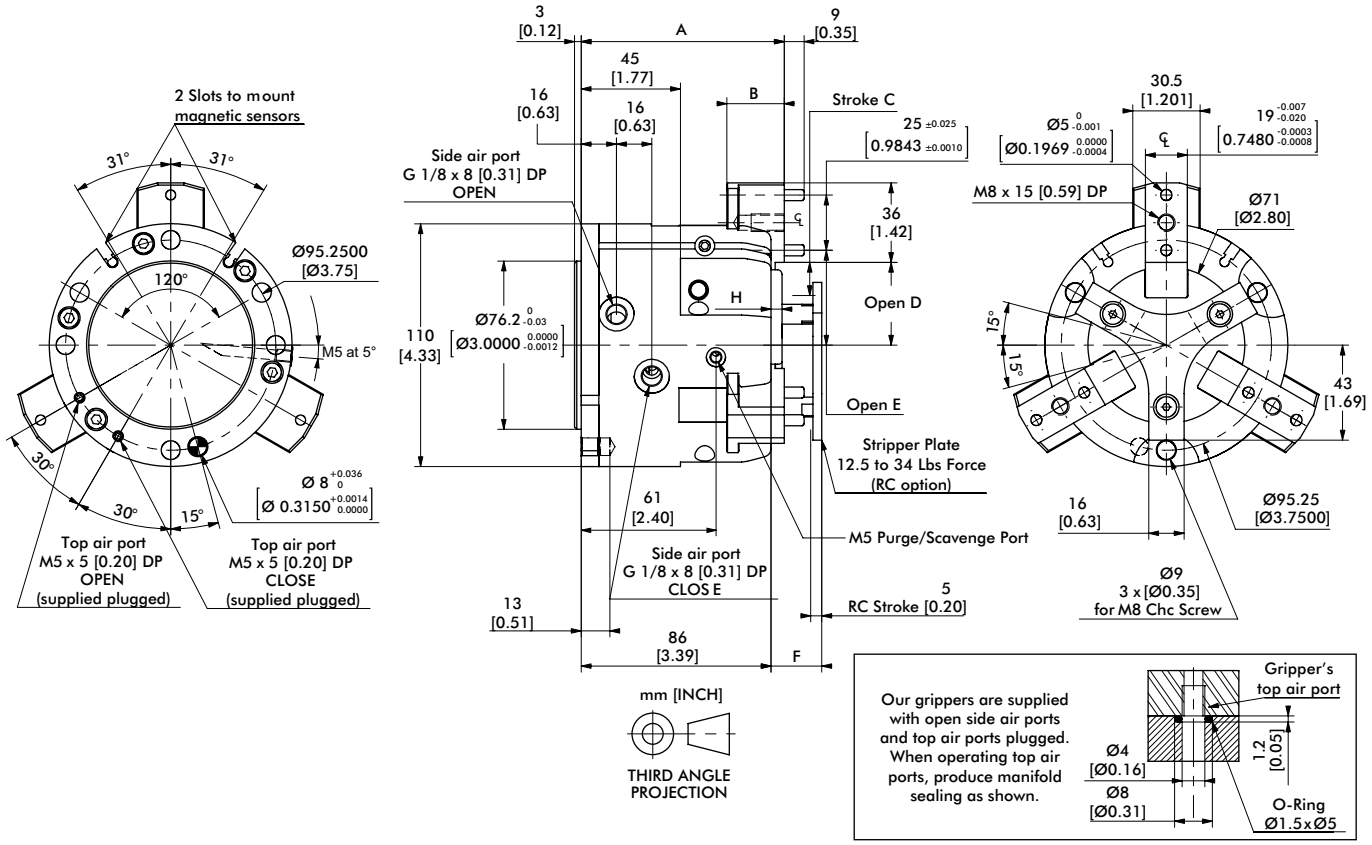

Model	A	B	C	D	E	F	H
REP-113	87 [3.43]	21 [0.83]	10 [0.39]	27.5 [1.083]	33 [1.30]	18 [0.71]	--
REP-113-C	92 [3.62]	26 [1.02]	15 [0.59]	37.5 [1.476]	43 [1.69]	23 [0.91]	5 [0.20]

Dimensions in mm [in]

Seal Repair Kits	REP-113
Buna-N Seal Repair Kit	SLKT-158
Viton® Seal Repair Kit	SLKT-158V

Loading Information

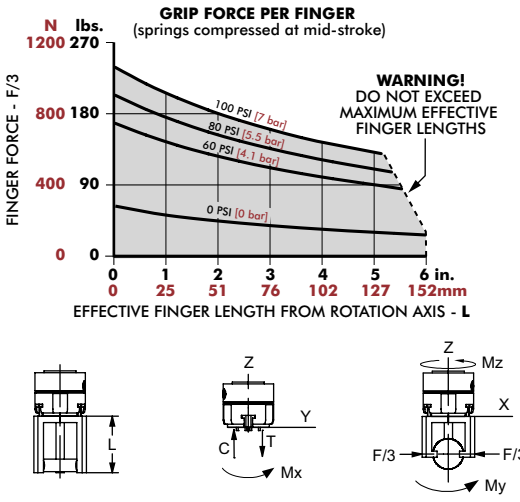

REP-113	Static
Maximum Tensile **T**	1980 N [445 lbs]
Maximum Compressive **C**	2150 N [483 lbs]
Maximum Moment M_x	58 Nm [513 in-lbs]
Maximum Moment M_y	100 Nm [885 in-lbs]
Maximum Moment M_z	110 Nm [974 in-lbs]

†Capacities are per set of jaws and are not simultaneous

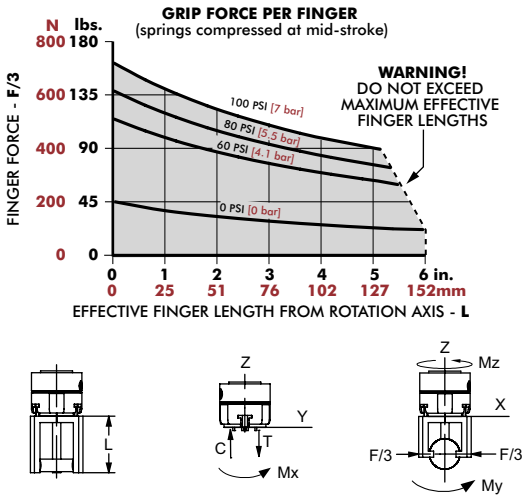

REP-113-C	Static
Maximum Tensile **T**	1970 N [443 lbs]
Maximum Compressive **C**	2140 N [481 lbs]
Maximum Moment M_x	52 Nm [460 in-lbs]
Maximum Moment M_y	100 Nm [885 in-lbs]
Maximum Moment M_z	110 Nm [974 in-lbs]

†Capacities are per set of jaws and are not simultaneous

Dimensions and technical information are subject to change without notice

Notes

RPC SERIES

3-Jaw Parallel Grippers | Features and Benefits | How To Order

Features:

- Self-centering gripper with very high grip force
- Optional stripper pate for part insertion/ejection
- Ideal for gripping small to very large round parts
- Grip force range from 445N to 13345N
- Repeatability of +/-0.03mm

Applications:

- Part feed/ejection
- Lathe applications
- Large heavy round parts



How To Order

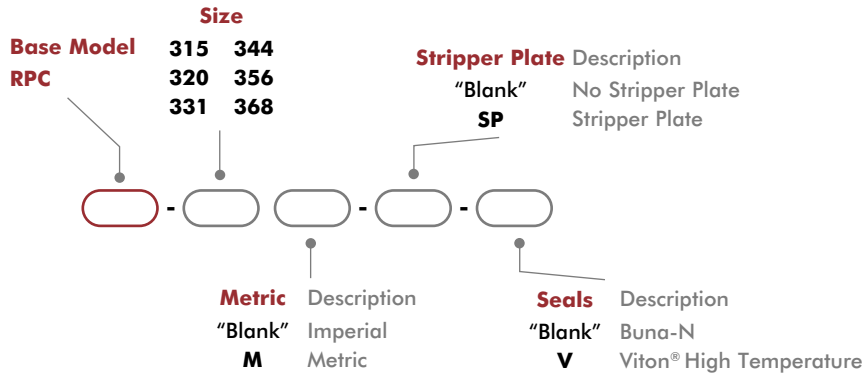

Accessories

Sensor Accessories	Model Numbers	Part Number	Qty/Unit
4mm NPN Magneto Resistive Sensor with Quick Disconnect*	All Models	OHSN-017	1-2
4mm PNP Magneto Resistive Sensor with Quick Disconnect*	All Models	OHSP-017	1-2
4mm NPN 90° Magneto Resistive Sensor with Quick Disconnect*	All Models	OHSN-011	1-2
4mm PNP 90° Magneto Resistive Sensor with Quick Disconnect*	All Models	OHSP-011	1-2
Quick Disconnect Cable (2 meters long)*	All Models	CABL-010	1-2
Quick Disconnect Cable (5 meters long)*	All Models	CABL-013	1-2
Fail Safe Valve (Imperial)	315, 320, 331	OFSV-001	1
Fail Safe Valve (Metric)	315, 320, 331	OFSV-004	1
Fail Safe Valve (Imperial)	344, 356, 368	OFSV-002	1
Fail Safe Valve (Metric)	344, 356, 368	OFSV-005	1

*Sensor and cable sold separately.

Specifications	Units	315	320	331
Total Rated Grip Force **F** @ 100 psi [7 bar]*	N [lbs]	445 [100]	1334 [300]	3336 [750]
Total Stroke	mm [in]	7.6 [0.30]	10.2 [0.40]	15.7 [0.62]
Weight	kg [lbs]	0.24 [0.53]	0.45 [1.0]	1.4 [3.0]
Pressure Range	bar [psi]	1.4-7 [20-100]		
Ingress Protection Class (IP)		IP54		
Displacement	cm^3 [in^3]	5.2 [0.32]	17.7 [1.08]	52.3 [3.31]
Temperature Range (Buna-N seals)	°C [°F]	-35°~80° [-30°~180°]		
Temperature Range (Viton® seals)	°C [°F]	-30°~150° [-20°~300°]		
Actuation	sec.	0.12	0.18	0.23
Accuracy	mm [in]	±0.05 [±0.002]		
Repeatability	mm [in]	±0.03 [±0.001]		
Valve to Actuate Double Acting		4-way, 2-position		

*With springs

Specifications	Units	344	356	368
Total Rated Grip Force **F** @ 100 psi [7 bar]*	N [lbs]	4003 [900]	6339 [1425]	13345 [3000]
Total Stroke	mm [in]	22.2 [0.88]	28.4 [1.12]	34.9 [1.38]
Weight	kg [lbs]	2.7 [6.0	4.4 [9.75]	7.3 [16]
Pressure Range	bar [psi]	1.4-7 [20-100]		
Ingress Protection Class (IP)		IP54		
Displacement	cm^3 [in^3]	120 [7.37]	253 [13.46]	424 [25.86]
Temperature Range (Buna-N seals)	°C [°F]	-35°~80° [-30°~180°]		
Temperature Range (Viton® seals)	°C [°F]	-30°~150° [-20°~300°]		
Actuation	sec.	0.47	0.50	0.74
Accuracy	mm [in]	±0.05 [±0.002]		
Repeatability	mm [in]	±0.03 [±0.001]		
Valve to Actuate Double Acting		4-way, 2-position		

*With springs

RPC-315

3-Jaw Parallel Grippers | Dimensions and Technical Specifications

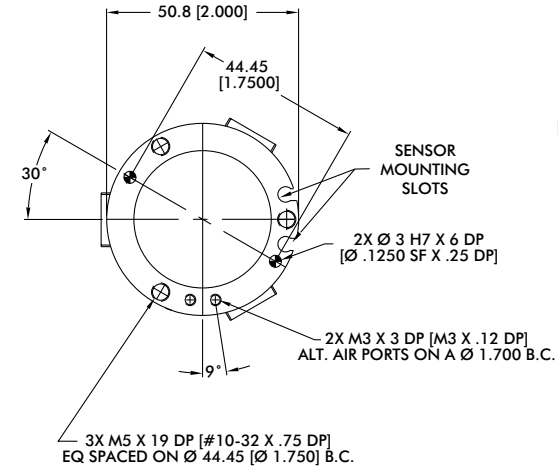

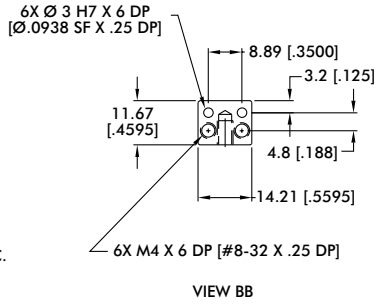

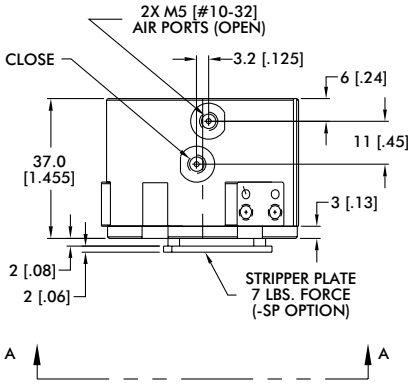

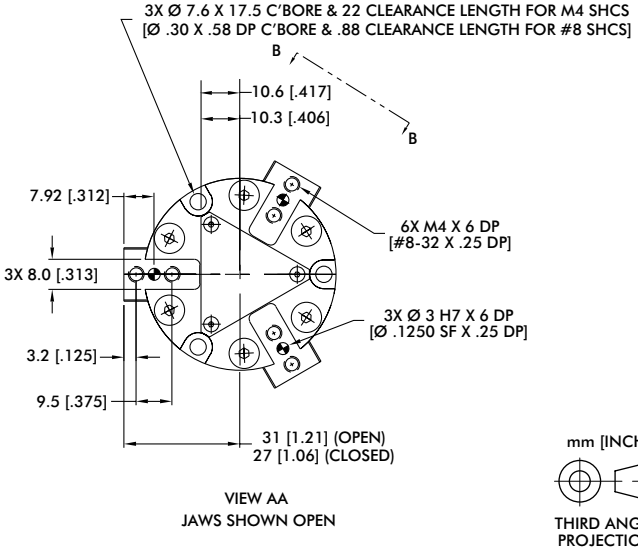

Loading Information

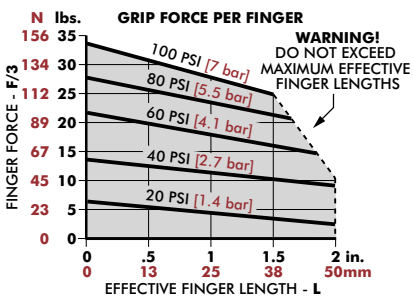

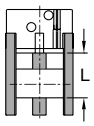

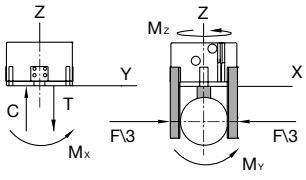

RPC-315	Static	Dynamic
Maximum Tensile **T**	1334 N [300 lbs]	445 N [100 lbs]
Maximum Compressive **C**	1334 N [300 lbs]	445 N [100 lbs]
Maximum Moment $\mathbf{M_x}$	28 Nm [250 in-lbs]	8 Nm [75 in-lbs]
Maximum Moment $\mathbf{M_y}$	28 Nm [250 in-lbs]	8 Nm [75 in-lbs]
Maximum Moment $\mathbf{M_z}$	17 Nm [150 in-lbs]	6 Nm [50 in-lbs]

†Capacities are per set of jaws and are not simultaneous

Dimensions and technical information are subject to change without notice

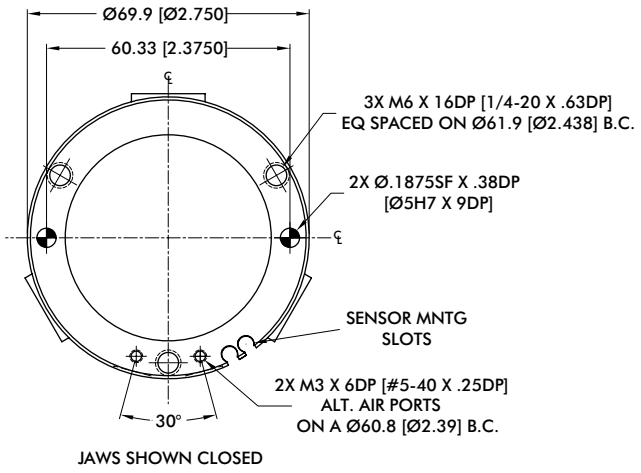

JAWS SHOWN CLOSED

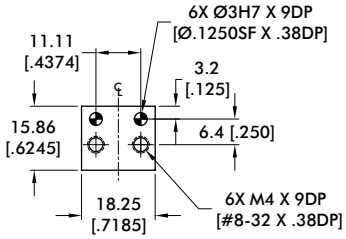

VIEW BB

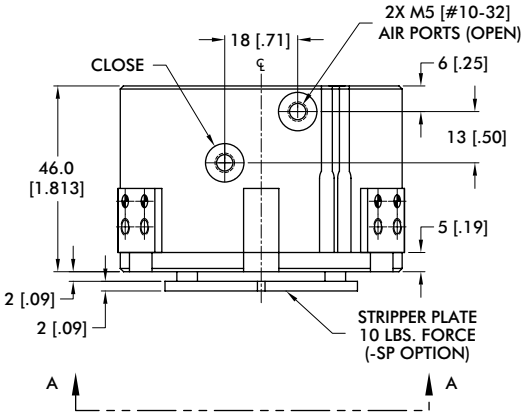

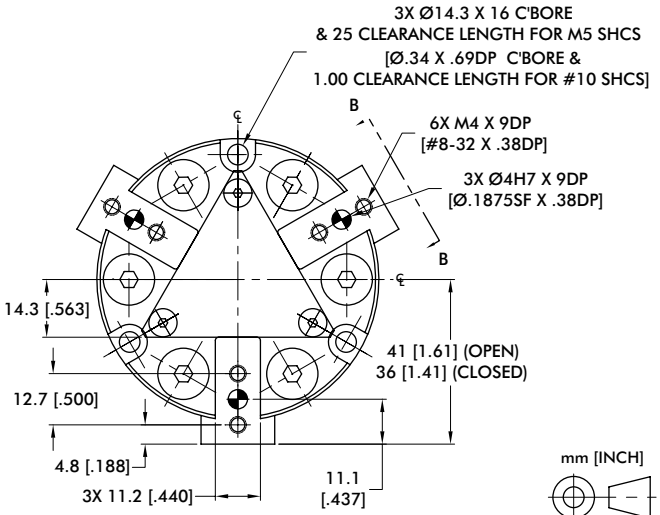

VIEW AA
JAWS SHOWN OPEN

THIRD ANGLE
PROJECTION

Loading Information

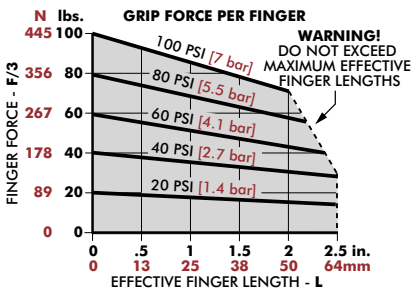

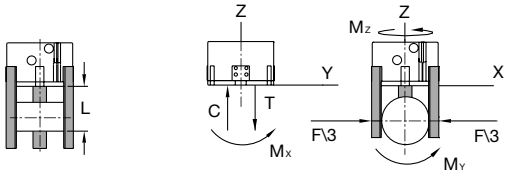

RPC-320	Static	Dynamic
Maximum Tensile **T**	3336 N [750 lbs]	1112 N [250 lbs]
Maximum Compressive **C**	3336 N [750 lbs]	1112 N [250 lbs]
Maximum Moment $\mathbf{M_x}$	85 Nm [750 in-lbs]	28 Nm [255 in-lbs]
Maximum Moment $\mathbf{M_y}$	85 Nm [750 in-lbs]	28 Nm [250 in-lbs]
Maximum Moment $\mathbf{M_z}$	40 Nm [350 in-lbs]	11 Nm [100 in-lbs]

†Capacities are per set of jaws and are not simultaneous

RPC-331

3-Jaw Parallel Grippers | Dimensions and Technical Specifications

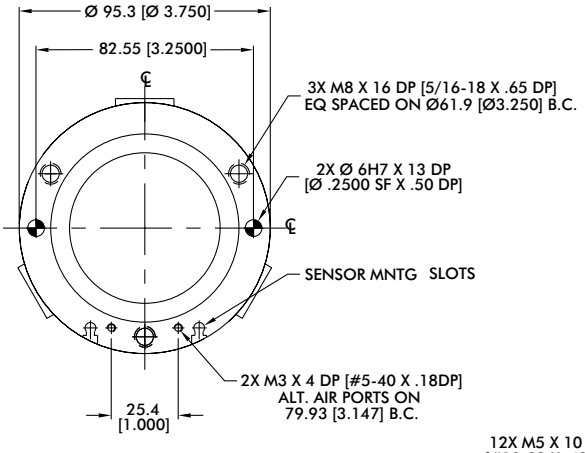

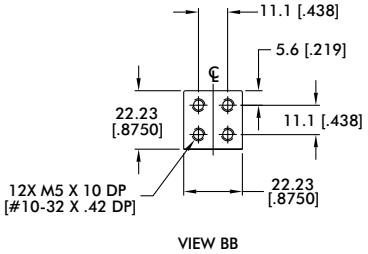

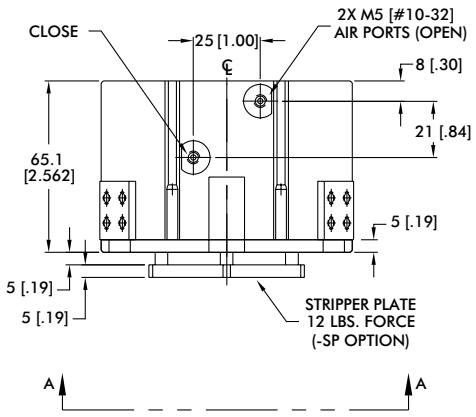

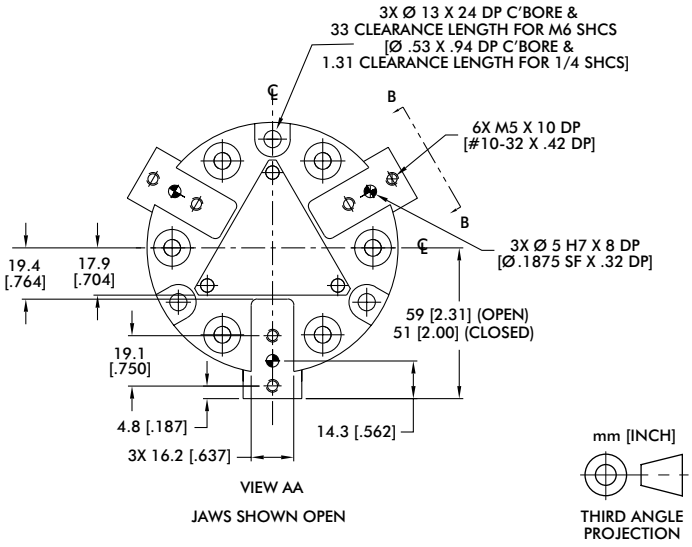

Loading Information

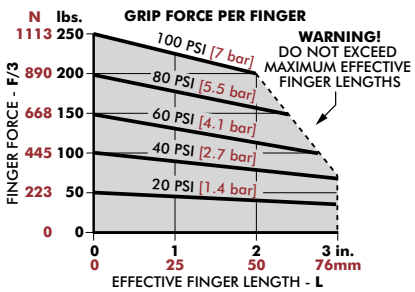

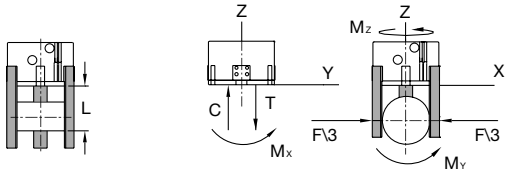

RPC-331	Static	Dynamic
Maximum Tensile **T**	5560 N [1250 lbs]	1779 N [400 lbs]
Maximum Compressive **C**	5560 N [1250 lbs]	1779 N [400 lbs]
Maximum Moment $\mathbf{M_x}$	141 Nm [1250 in-lbs]	45 Nm [400 in-lbs]
Maximum Moment $\mathbf{M_y}$	141 Nm [1250 in-lbs]	45 Nm [400 in-lbs]
Maximum Moment $\mathbf{M_z}$	113 Nm [1000 in-lbs]	34 Nm [300 in-lbs]

†Capacities are per set of jaws and are not simultaneous

Dimensions and technical information are subject to change without notice

3-Jaw Parallel Grippers | Dimensions and Technical Specifications

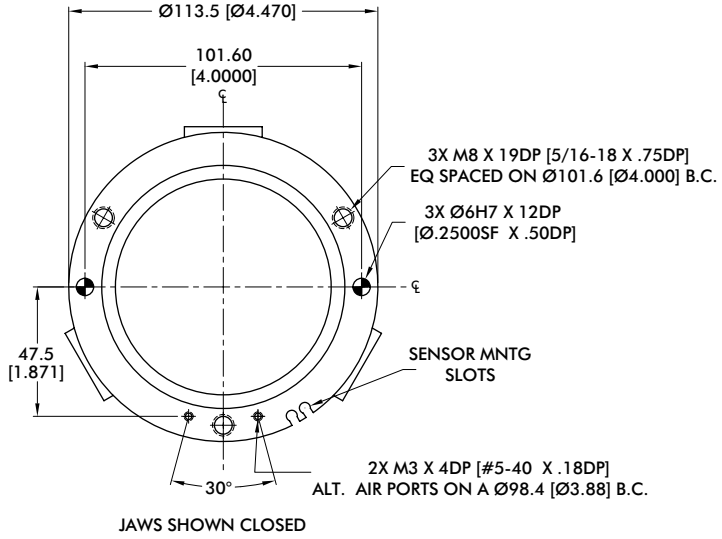

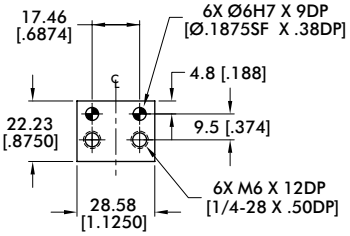

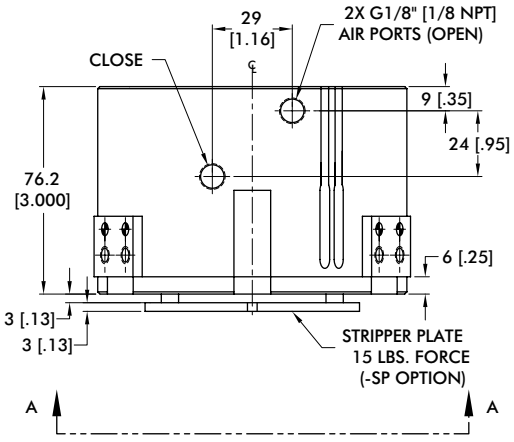

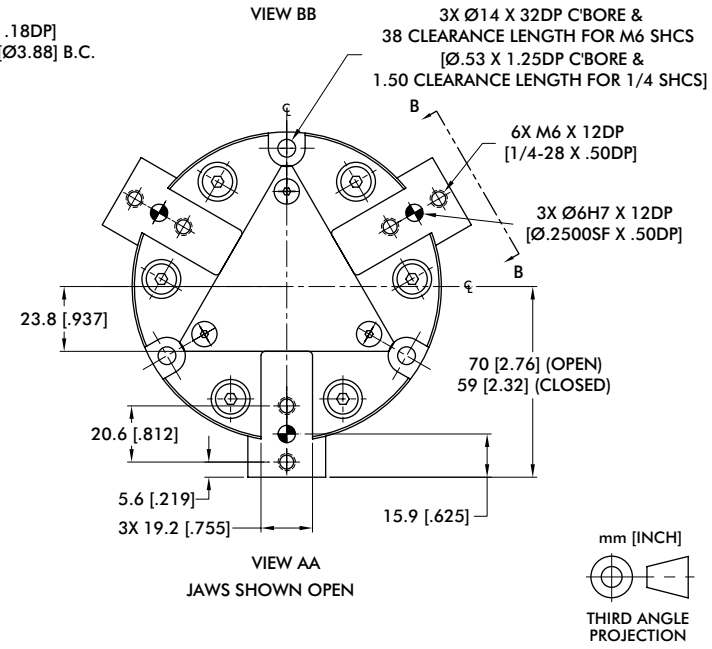

Loading Information

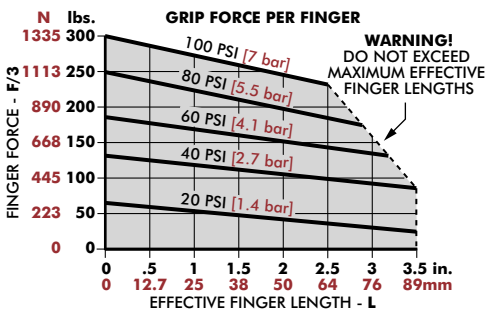

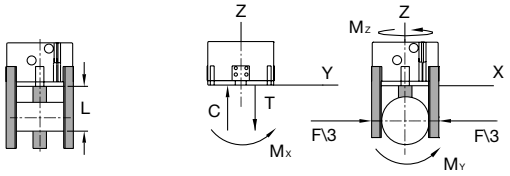

RPC-344	Static	Dynamic
Maximum Tensile **T**	8896 N [2000 lbs]	3336 N [750 lbs]
Maximum Compressive **C**	8896 N [2000 lbs]	3336 N [750 lbs]
Maximum Moment $\mathbf{M_x}$	226 Nm [2000 in-lbs]	85 Nm [750 in-lbs]
Maximum Moment $\mathbf{M_y}$	226 Nm [2000 in-lbs]	85 Nm [750 in-lbs]
Maximum Moment $\mathbf{M_z}$	170 Nm [1500 in-lbs]	57 Nm [500 in-lbs]

†Capacities are per set of jaws and are not simultaneous

RPC-356

3-Jaw Parallel Grippers | Dimensions and Technical Specifications

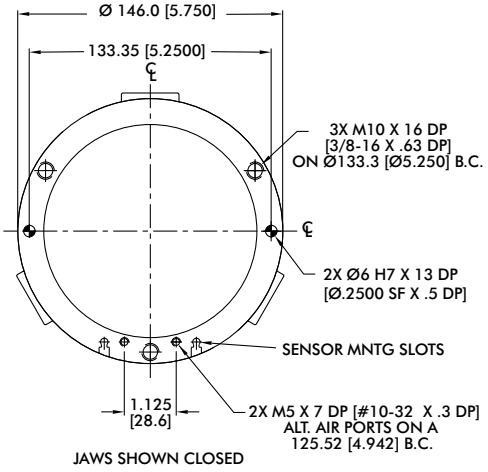

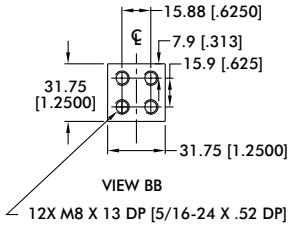

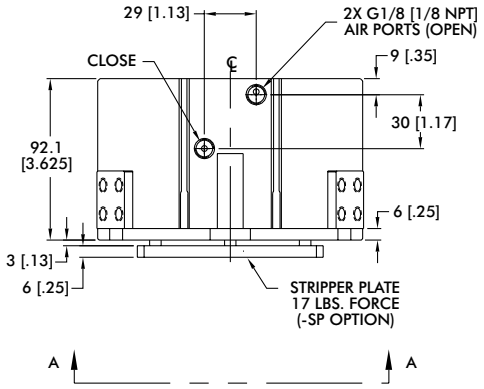

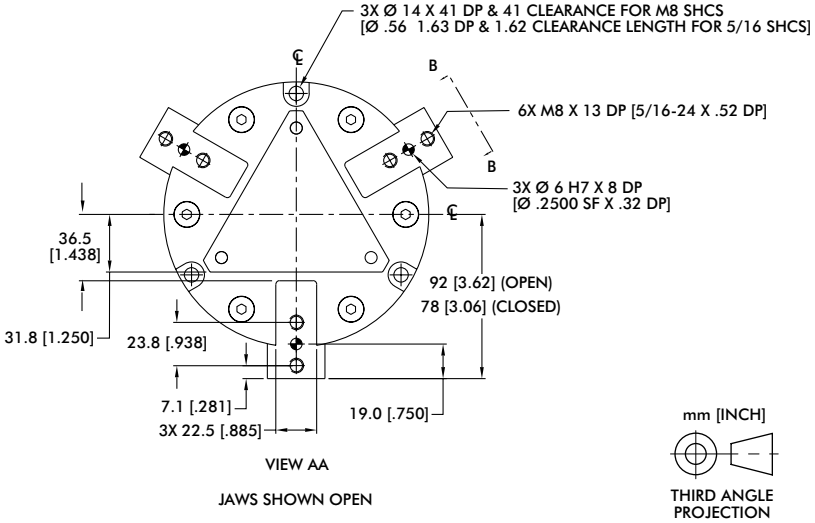

Loading Information

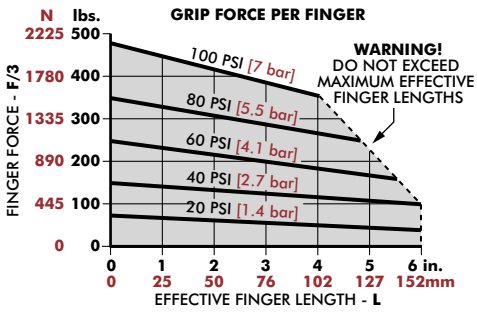

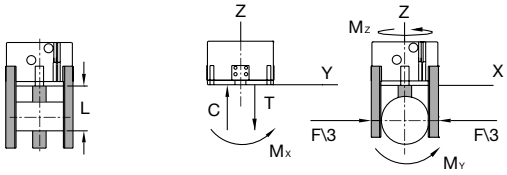

RPC-356	Static	Dynamic
Maximum Tensile **T**	13445 N [3000 lbs]	4448 N [1000 lbs]
Maximum Compressive **C**	13445 N [3000 lbs]	4448 N [1000 lbs]
Maximum Moment M_x	452 Nm [4000 in-lbs]	113 Nm [1000 in-lbs]
Maximum Moment M_y	452 Nm [4000 in-lbs]	113 Nm [1000 in-lbs]
Maximum Moment M_z	339 Nm [3000 in-lbs]	85 Nm [750 in-lbs]

†Capacities are per set of jaws and are not simultaneous

Dimensions and technical information are subject to change without notice

3-Jaw Parallel Grippers | Dimensions and Technical Specifications

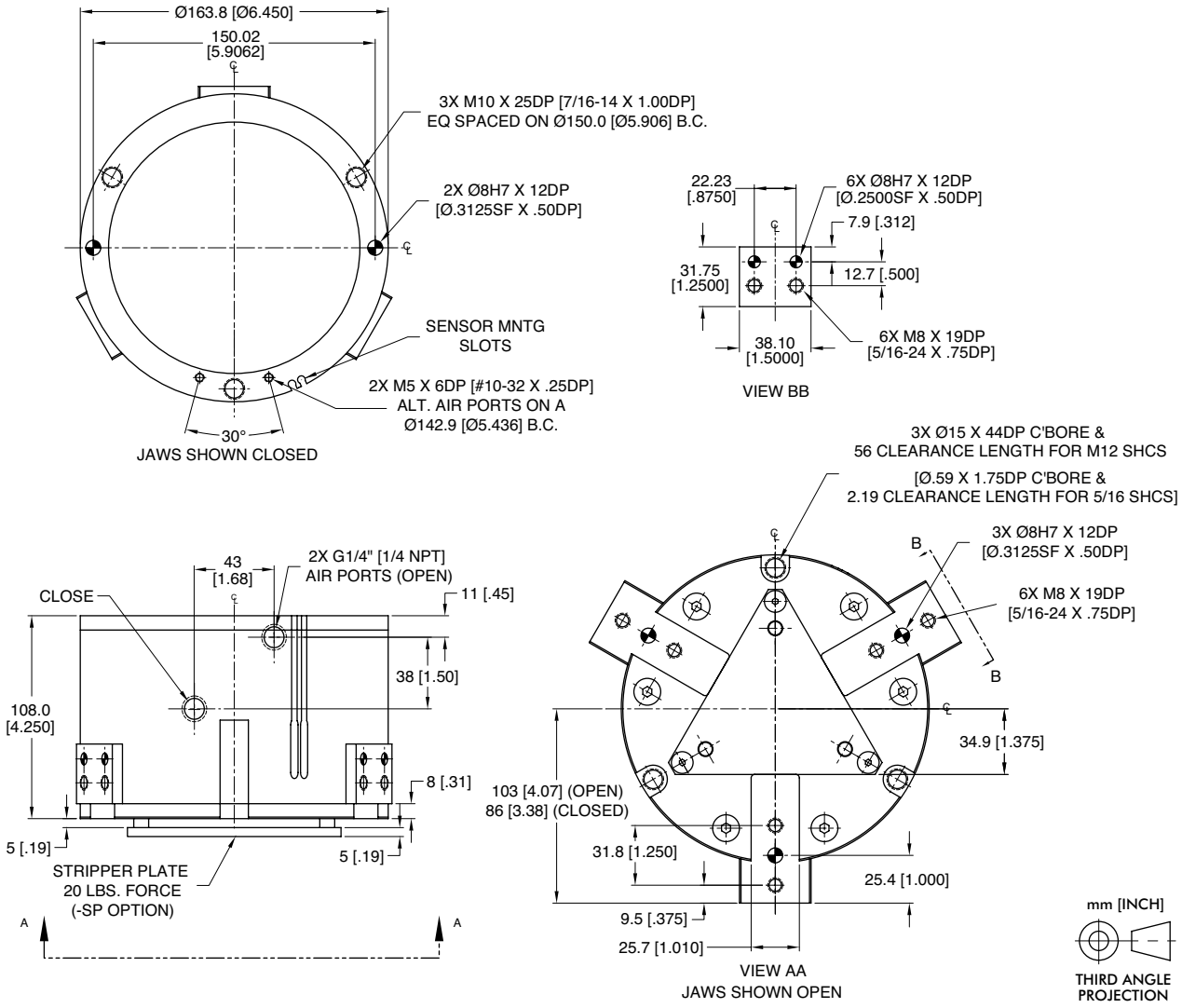

Loading Information

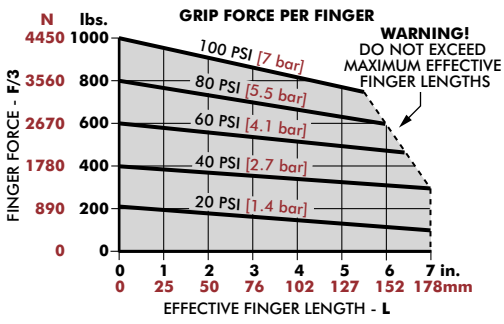

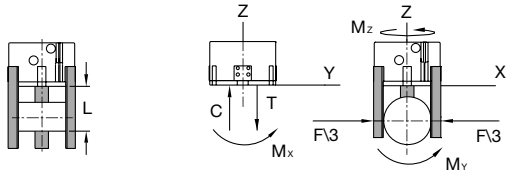

RPC-368	Static	Dynamic
Maximum Tensile **T**	22241 N [5000 lbs]	6672 N [1500 lbs]
Maximum Compressive **C**	22241 N [5000 lbs]	6672 N [1500 lbs]
Maximum Moment M_x	791 Nm [7000 in-lbs]	170 Nm [1500 in-lbs]
Maximum Moment M_y	791 Nm [7000 in-lbs]	170 Nm [1500 in-lbs]
Maximum Moment M_z	565 Nm [5000 in-lbs]	113 Nm [1000 in-lbs]

†Capacities are per set of jaws and are not simultaneous

ANGULAR GRIPPERS

Angular Grippers | Product Overview

Model		Stroke Range	Grip Force Range	Operating Environment	Special Features	Page GR-ANG-#
CT		90° per Jaw	272-651 [61-146]	IP43	180 degree Wide Jaw Opening Angle.	3
DCT		90° per Jaw	32-157 [7.2-35]	IP43	180 degree Wide Jaw Opening, spring assist. DIRECTCONNECT	3
RA (CAM) RA (TOGGLE)		15° per Jaw	71-801 [16-180]	IP43	Low Cost, small compact Gripper. Rugged Applications.	13
RUA		31.8°- 38.2° Total	384-7911 [86-1778]	IP54 Using Purge Port	High Force Gripping for Harsh & Rugged Applications. Spring Assist.	27

Dimensions and technical information are subject to change without notice

DIRECTCONNECT Modular Direct Mounting System without Adapter Plates

Products can be mounted in multiple positions. Refer to datasheet for complete info.

Slide to Gripper

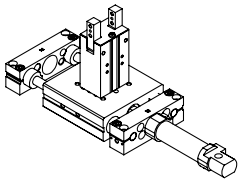

DLB Base Slide to DCT Angular Gripper

Slide to Gripper

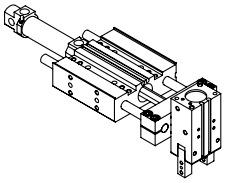

DLT Thruster Slide to DCT Angular Gripper

Slide to Gripper

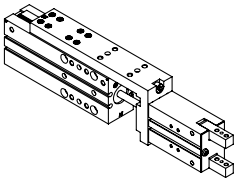

DLM Thruster Slide to DCT Angular Gripper

DIRECTCONNECT™ Mounting Compatibility Chart

DESTACO's DIRECTCONNECT™ technology, allows all components of the system–grippers, rotaries and slides—to be mounted together directly. Look for matching icons on product datasheets for mounting compatibility.

Note: The numbers in the cell represent the metric screw size and basic mounting pattern.

S=Square, R=Rectangle. ie; 5S = M5 Screw with square mounting pattern.

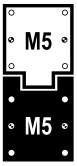

5S

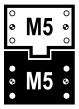

5R

Catalog Models		Grippers	
		DCT-12, 16, 20	DCT-25
Base Slides	DLB-06,08	3R	
	DLB-10,12,16		5R
	DLB-20,25		
Thruster Slides	DLT-06,08	3R	
	DLT-10,12,16	3R	5R
	DLT-20,25		5R
	DLM-07	3R	
	DLM-9,12	3R	5R

CT/DCT & CT-RE/DCT-RE SERIES

Angular Grippers | Features and Benefits | How To Order

Features:

- 180° angular gripper jaw opening for direct feed systems
- Shielded design for working in dirty environments
- Spring assist option maintains grip in case of air pressure loss
- Adjustable 0 to 180° opening angle option.
- Side and bottom gripper mounting
- Multiple air ports, side and top air ports for easy installation

Applications:

- In-line conveying applications
- OEM pick and place machines
- End-of-arm tooling



How To Order

Base Model
DCT (sizes 12-25 only)
CT (sizes 32-50 only)

Size
12M **25M** **50M**
16M **32M**
20M **40M**

Seals	Description
"Blank"	Buna-N
V	Viton® High Temperature

Spring	Description
"Blank"	None
RE	Spring Closed

Accessories

Sensor Accessories	Model Numbers	Part Number	Qty/Unit
NPN Magneto Resistive Sensor with M8 Quick Disconnect	All Models	OHSN-017	1-2
PNP Magneto Resistive Sensor with M8 Quick Disconnect	All Models	OHSP-017	1-2
Inductive Sensor Mounting Kit (mounts 2 sensors)	See Datasheet		1
4mm NPN Inductive Sensor with M8 Quick Disconnect*	16M, 20M	OISN-014	1-2
4mm PNP Inductive Sensor M8 with Quick Disconnect*	16M, 20M	OISP-014	1-2
M8 NPN Inductive Sensor with M8 Quick Disconnect*	25M, 32M	OISN-011	1-2
M8 PNP Inductive Sensor with M8 Quick Disconnect*	25M, 32M	OISP-011	1-2
M12 NPN Inductive Sensor with M12 Quick Disconnect*	40M, 50M	OISN-017	1-2
M12 PNP Inductive Sensor with M12 Quick Disconnect*	40M, 50M	OISP-017	1-2
M8 Quick Disconnect 2 Meter Cable Length*	All Models	CABL-010	1-2
M8 Quick Disconnect 5 Meter Cable Length*	All Models	CABL-013	1-2
M12 Quick Disconnect 2 Meter Cable Length*	All Models	CABL-014	1-2
M12 Quick Disconnect 5 Meter Cable Length*	All Models	CABL-018	1-2

Pneumatic Accessories	Model Numbers	Part Number	Qty/Unit
Adjustable Flow Control-M5 Elbow-6mm OD Push-in	12M, 16M, 20M, 25M, 32M	VLVF-008	1-2
Adjustable Flow Control-G1/8 Elbow-6mm OD Push-in	40M, 50M	VLVF-005	1-2

*Sensor and cable sold separately.

CT/DCT & CT-RE/DCT-RE SERIES

Angular Grippers | Technical Specifications

Specifications	Units	12M	12M-RE	16M	16M-RE	20M	20M-RE	25M	25M-RE
Total Rated Grip Force **F** @ 100 psi [7 bar]	N [lb]	32 [7.2]	40 [9]	70 [16]	87 [19]	112 [25]	141 [32]	157 [35]	199 [45]
Stroke (degrees per finger)		90° per finger (180° total)							
Weight	kg [lbs]	0.09 [0.20]	0.12 [0.26]	0.16 [0.35]	0.20 [0.44]	0.28 [0.62]	0.33 [0.73]	0.49 [1.08]	0.57 [1.26]
Pressure Range w/o Spring	bar [psia]	3-7 [40-100] **CT/DCT**							
Pressure Range w/ Spring	bar [psi]	4-7 [60-100] **CT-RE/DCT-RE**							
Ingress Protection Class (IP)		IP43							
Displacement	cm^3 [in^3]	1.92 [0.117]		4.12 [0.251]		7.92 [0.483]		14.9 [0.909]	
Temperature Range (Buna-N seals)	°C [°F]	-35°~80° [-30°~180°]							
Temperature Range (Viton® seals)	°C [°F]	-30°~150° [-20°~300°]							
Actuation (open)	sec	0.06	0.08	0.13	0.15	0.16	0.20	0.21	0.25
Actuation (close)	sec	0.06	0.05	0.13	0.12	0.16	0.14	0.21	0.19
Accuracy	mm [in]	±0.07 [±0.0028]				±0.08 [±0.003]			
Repeatability	mm [in]	±0.05 [±0.002]							
Valve to Actuate Double Acting		4-way, 2-position **CT/DCT**							
Valve to Actuate Double Acting Spring Assist		4-way, 2-position **CT-RE/DCT-RE**							
Valve to Actuate Single Acting		3-way, 2-position **CT-RE/DCT-RE**							

Specifications	Units	32M	32M-RE	40M	40M-RE	50M	50M-RE
Total Rated Grip Force **F** @ 100 psi [7 bar]	N [lb]	272 [61]	353 [79]	446 [100]	592 [133]	651 [146]	893 [201]
Stroke (degrees per finger)		90° per finger (180° total)					
Weight	kg [lbs]	0.72 [1.59]	0.83 [1.83]	1.18 [2.60]	1.39 [3.06]	1.82 [4.01]	2.21 [4.87]
Pressure Range w/o Spring	bar [psi]	3-7 [40-100] **CT/DCT**					
Pressure Range w/ Spring	bar [psi]	4-7 [60-100] **CT-RE/DCT-RE**					
Ingress Protection Class (IP)		IP43					
Displacement	cm^3 [in^3]	28.6 [1.745]		52 [3.173]		92 [5.614]	
Temperature Range (Buna-N seals)	°C [°F]	-35°~80° [-30°~180°]					
Temperature Range (Viton® seals)	°C [°F]	-30°~150° [-20°~300°]					
Actuation (open)	sec	0.29	0.35	0.41	0.47	0.46	0.54
Actuation (close)	sec	0.29	0.26	0.41	0.38	0.46	0.42
Accuracy	mm [in]	±0.08 [±0.003]		±0.09 [±0.0036]			
Repeatability	mm [in]	±0.05 [±0.002]					
Valve to Actuate Double Acting		4-way, 2-position **CT/DCT**					
Valve to Actuate Double Acting Spring Assist		4-way, 2-position **CT-RE/DCT-RE**					
Valve to Actuate Single Acting		3-way, 2-position **CT-RE/DCT-RE**					

DCT-12, -12-RE

Angular Grippers | Dimensions and Technical Specifications

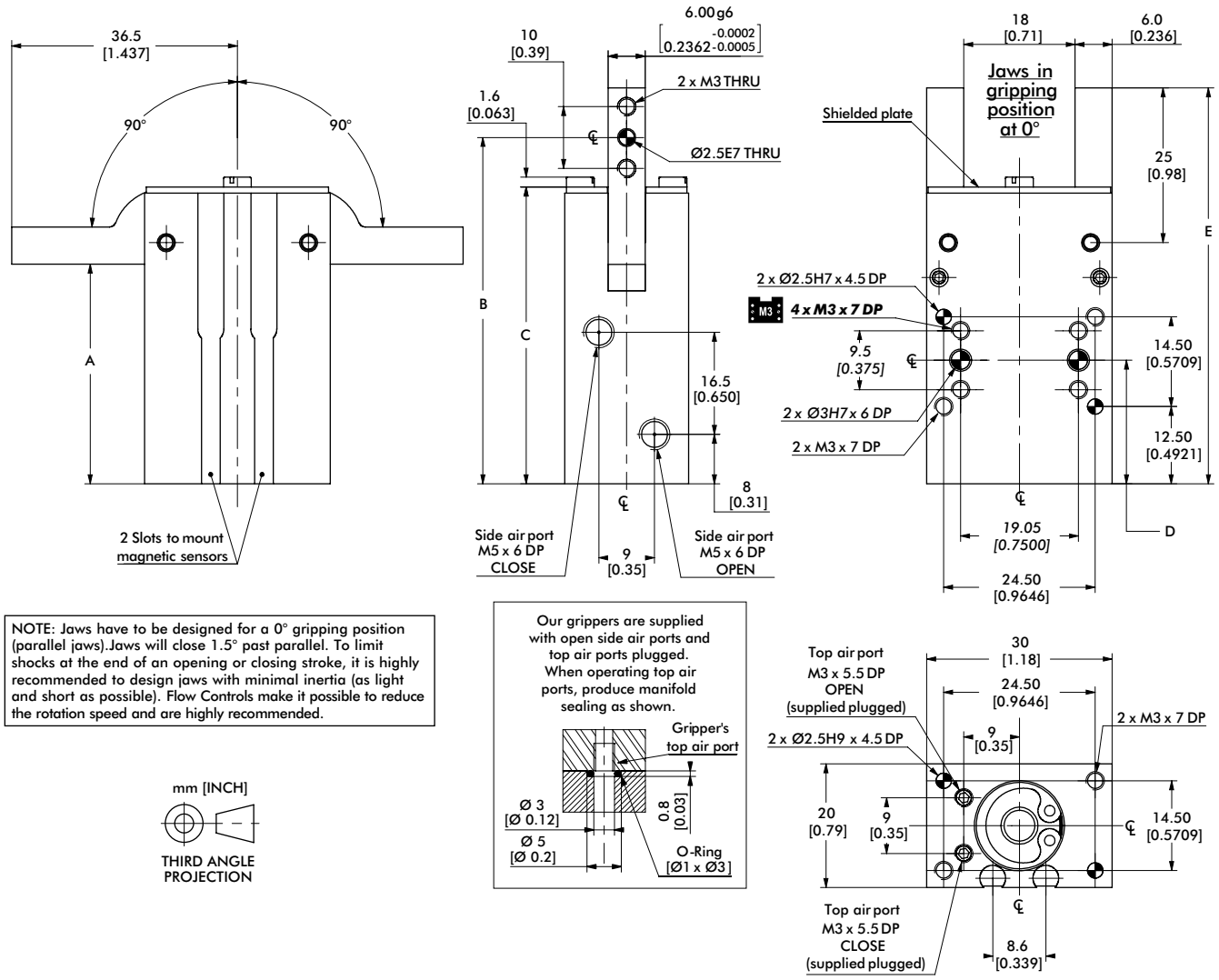

NOTE: Jaws have to be designed for a 0° gripping position (parallel jaws).Jaws will close 1.5° past parallel. To limit shocks at the end of an opening or closing stroke, it is highly recommended to design jaws with minimal inertia (as light and short as possible). Flow Controls make it possible to reduce the rotation speed and are highly recommended.

mm [INCH]

THIRD ANGLE PROJECTION

Model	A	B	C	D	E
DCT-12	35.5 [1.398]	56.00 [2.2047]	48 [1.89]	20.00 [0.7874]	64 [2.52]
DCT-12-RE	51.5 [2.028]	72.00 [2.8346]	64 [2.52]	35.00 [1.3780]	80 [3.15]

Dimensions in mm [in]

Mounting Accessories	Order #
Adjustment Stop Kit (1 shielded plate, 1 stop)	KP-DCT12-BR

Seal Repair Kits	Order #
Buna-N Seal Repair Kit	SLKT-159
Viton® Seal Repair Kit	SLKT-159V

Loading Information

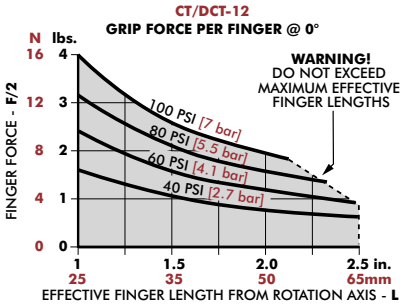

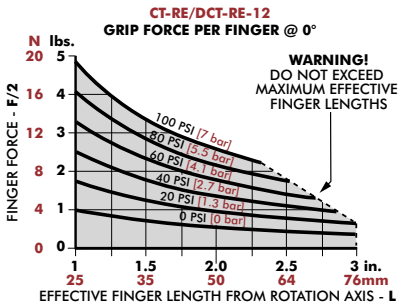

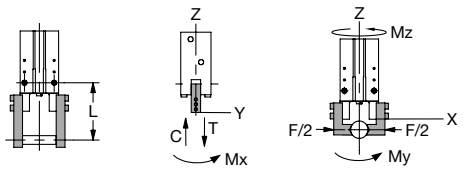

	Static
Maximum Tensile **T**	47 N [11 lbs]
Maximum Compressive **C**	47 N [11 lbs]
Maximum Moment $\mathbf{M_x}$	1.1 Nm [10 in-lbs]
Maximum Moment $\mathbf{M_y}$	1.1 Nm [10 in-lbs]
Maximum Moment $\mathbf{M_z}$	1.1 Nm [10 in-lbs]

†Capacities are per set of jaws and are not simultaneous

DCT-16, -16-RE

Angular Grippers | Dimensions and Technical Specifications

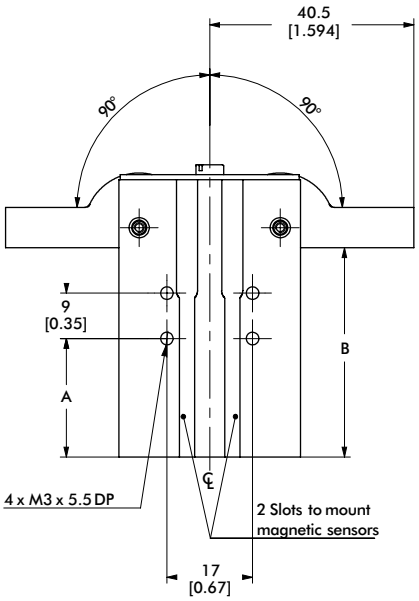

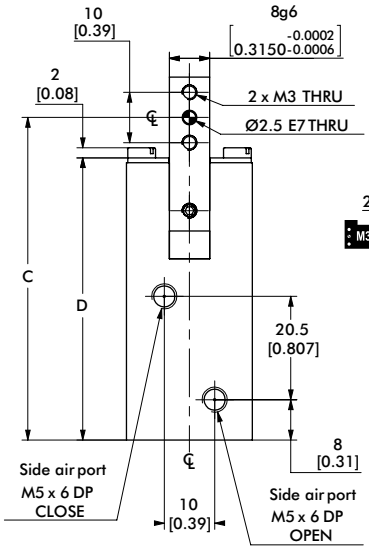

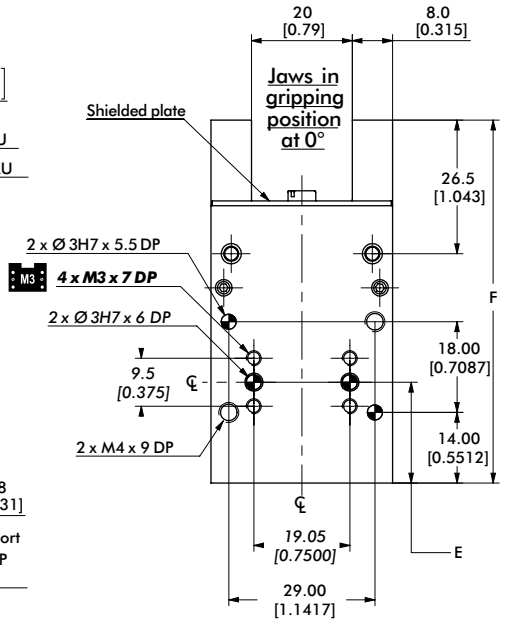

NOTE: Jaws have to be designed for a 0° gripping position (parallel jaws).Jaws will close 1.5° past parallel. To limit shocks at the end of an opening or closing stroke, it is highly recommended to design jaws with minimal inertia (as light and short as possible). Flow Controls make it possible to reduce the rotation speed and are highly recommended.

mm [INCH]

THIRD ANGLE PROJECTION

Our grippers are supplied with open side air ports and top air ports plugged. When operating top air ports, produce manifold sealing as shown.

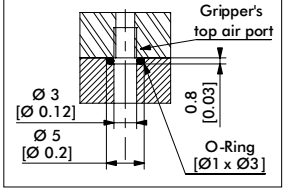

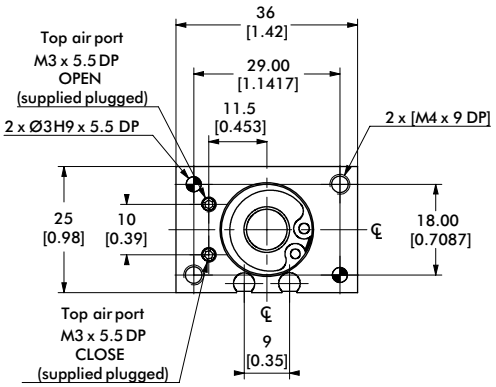

Model	A	B	C	D	E	F
DCT-16	23.5 [0.925]	41.5 [1.634]	64.00 [2.5197]	56 [2.20]	20.00 [0.7874]	72 [2.83]
DCT-16-RE	38.5 [1.516]	56.5 [2.224]	79.00 [3.1102]	71 [2.80]	35.00 [1.3780]	87 [3.43]

Dimensions in mm [in]

Mounting Accessories	Order #
Inductive Sensor Mounting Kit (mounts 2 sensors)	SDCT-16-20
Adjustment Stop Kit (1 shielded plate, 1 stop)	KP-DCT16-BR

Seal Repair Kits	Order #
Buna-N Seal Repair Kit	SLKT-160
Viton® Seal Repair Kit	SLKT-160V

Loading Information

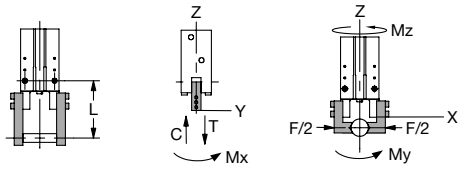

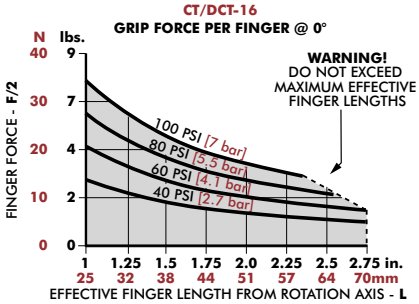

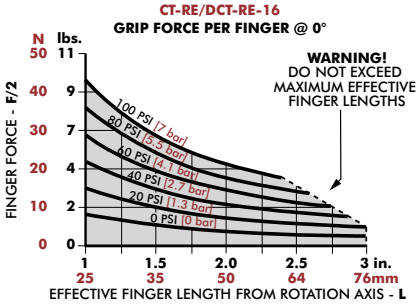

	Static
Maximum Tensile **T**	90 N [20 lbs]
Maximum Compressive **C**	90 N [20 lbs]
Maximum Moment M_X	2.9 Nm [26 in-lbs]
Maximum Moment M_Y	2.9 Nm [26 in-lbs]
Maximum Moment M_Z	2.9 Nm [26 in-lbs]

†Capacities are per set of jaws and are not simultaneous

DCT-20, -20-RE

Angular Grippers | Dimensions and Technical Specifications

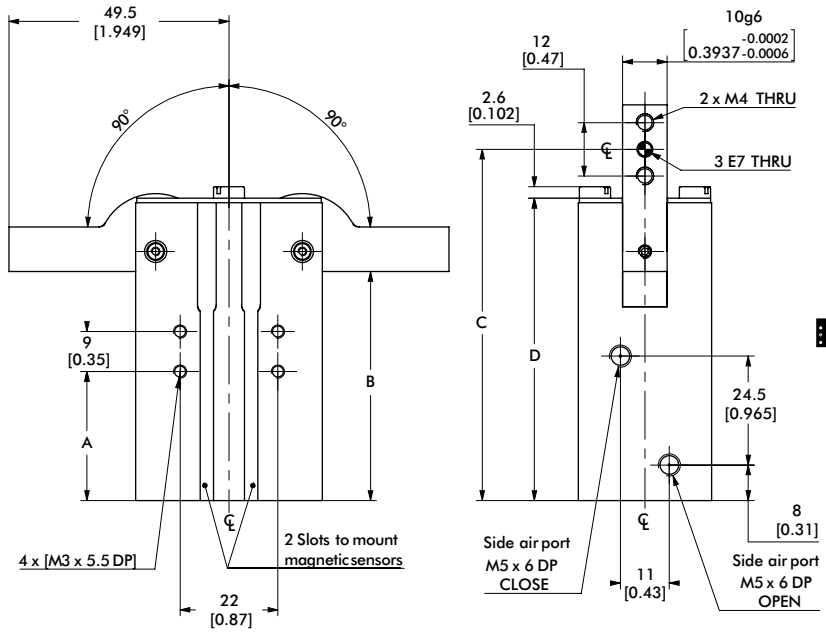

NOTE: Jaws have to be designed for a 0° gripping position (parallel jaws).Jaws will close 1.5° past parallel. To limit shocks at the end of an opening or closing stroke, it is highly recommended to design jaws with minimal inertia (as light and short as possible). Flow Controls make it possible to reduce the rotation speed and are highly recommended.

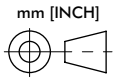

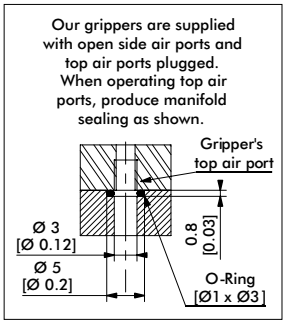

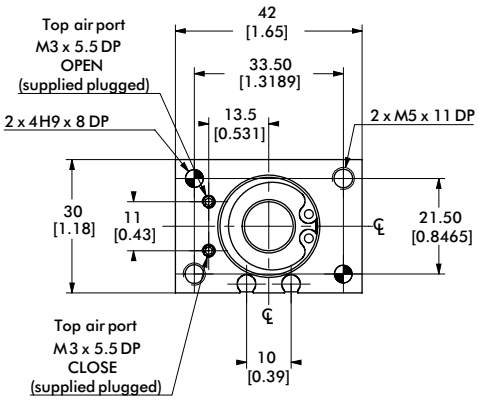

Model	A	B	C	D	E	F	G
DCT-20	29 [1.14]	51.5 [2.028]	79.00 [3.1102]	68 [2.68]	22.00 [0.8661]	18.00 [0.7087]	89 [3.50]
DCG/CT-20-RE	47 [1.85]	66.5 [2.618]	94.00 [3.7008]	83 [3.27]	39.00 [1.5354]	20.00 [0.7874]	104 [4.09]

Dimensions in mm [in]

Mounting Accessories	Order #
Inductive Sensor Mounting Kit (mounts 2 sensors)	SDCT-16-20
Adjustment Stop Kit (1 shielded plate, 1 stop)	KP-DCT20-BR

Seal Repair Kits	Order #
Buna-N Seal Repair Kit	SLKT-161
Viton® Seal Repair Kit	SLKT-161V

Loading Information

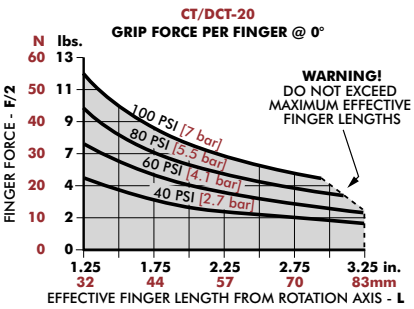

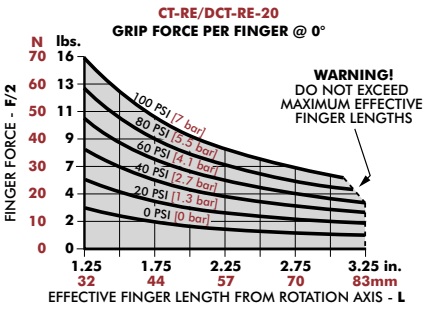

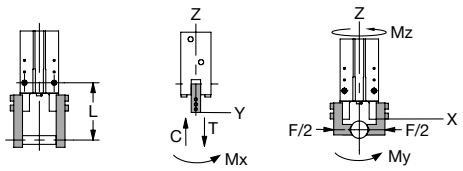

	Static
Maximum Tensile **T**	150 N [34 lbs]
Maximum Compressive **C**	150 N [34 lbs]
Maximum Moment M_x	6 Nm [53 in-lbs]
Maximum Moment M_y	6 Nm [53 in-lbs]
Maximum Moment M_z	6 Nm [53 in-lbs]

†Capacities are per set of jaws and are not simultaneous

Angular Grippers | Dimensions and Technical Specifications

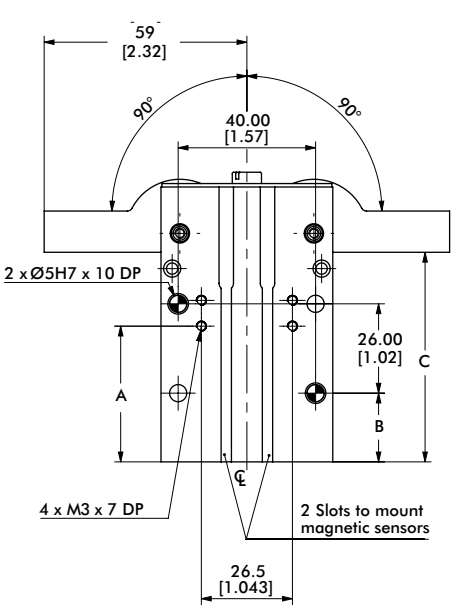

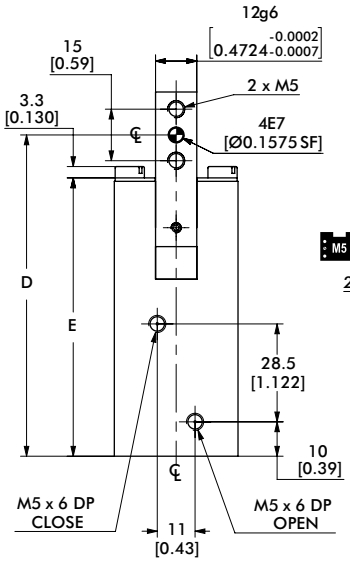

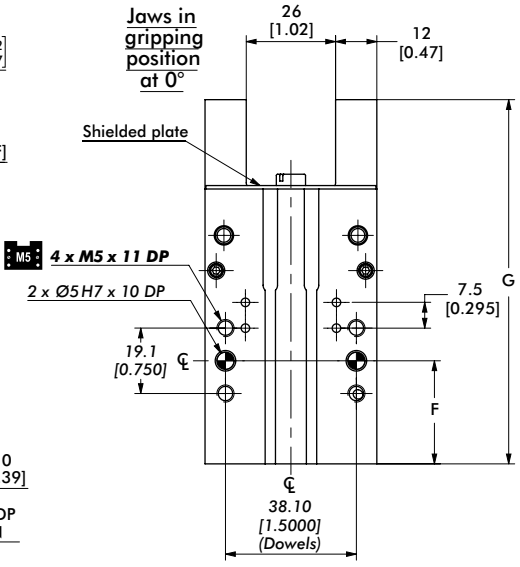

NOTE: Jaws have to be designed for a 0° gripping position (parallel jaws).Jaws will close 1.5° past parallel. To limit shocks at the end of an opening or closing stroke, it is highly recommended to design jaws with minimal inertia (as light and short as possible). Flow Controls make it possible to reduce the rotation speed and are highly recommended.

mm [INCH]

THIRD ANGLE PROJECTION

Our grippers are supplied with open side air ports and top air ports plugged. When operating top air ports, produce manifold sealing as shown.

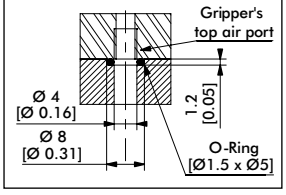

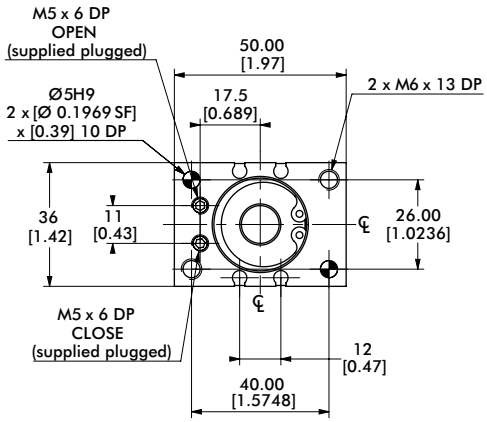

Model	A	B	C	D	E	F	G
DCT-25	39.5 [1.555]	20.00 [0.79]	61 [2.40]	93.50 [3.6811]	81 [3.19]	30.00 [1.1811]	106 [4.17]
DCT-25-RE	60.5 [2.382]	25.00 [0.98]	82 [3.23]	114.50 [4.5079]	102 [4.02]	51.00 [2.0079]	127 [5.00]

Dimensions in mm [in]

Mounting Accessories	Order #
Inductive Sensor Mounting Kit (mounts 2 sensors)	SDCT-25-32
Adjustment Stop Kit (1 shielded plate, 1 stop)	KP-DCT25-BR

Seal Repair Kits	Order #
Buna-N Seal Repair Kit	SLKT-162
Viton® Seal Repair Kit	SLKT-162V

Loading Information

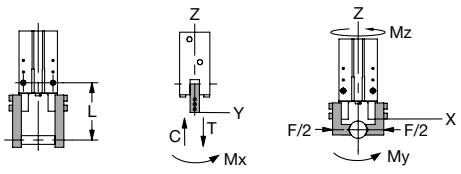

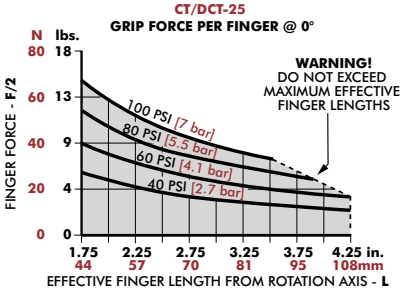

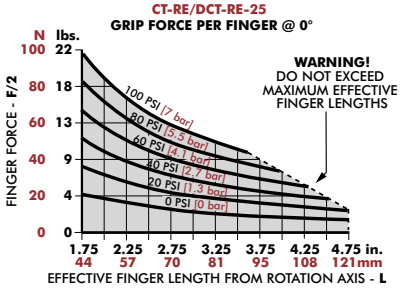

	Static
Maximum Tensile **T**	205 N [46 lbs]
Maximum Compressive **C**	205 N [46 lbs]
Maximum Moment M_X	10 Nm [89 in-lbs]
Maximum Moment M_Y	10 Nm [89 in-lbs]
Maximum Moment M_Z	10 Nm [89 in-lbs]

†Capacities are per set of jaws and are not simultaneous

CT-32/ -32-RE

Angular Grippers | Dimensions and Technical Specifications

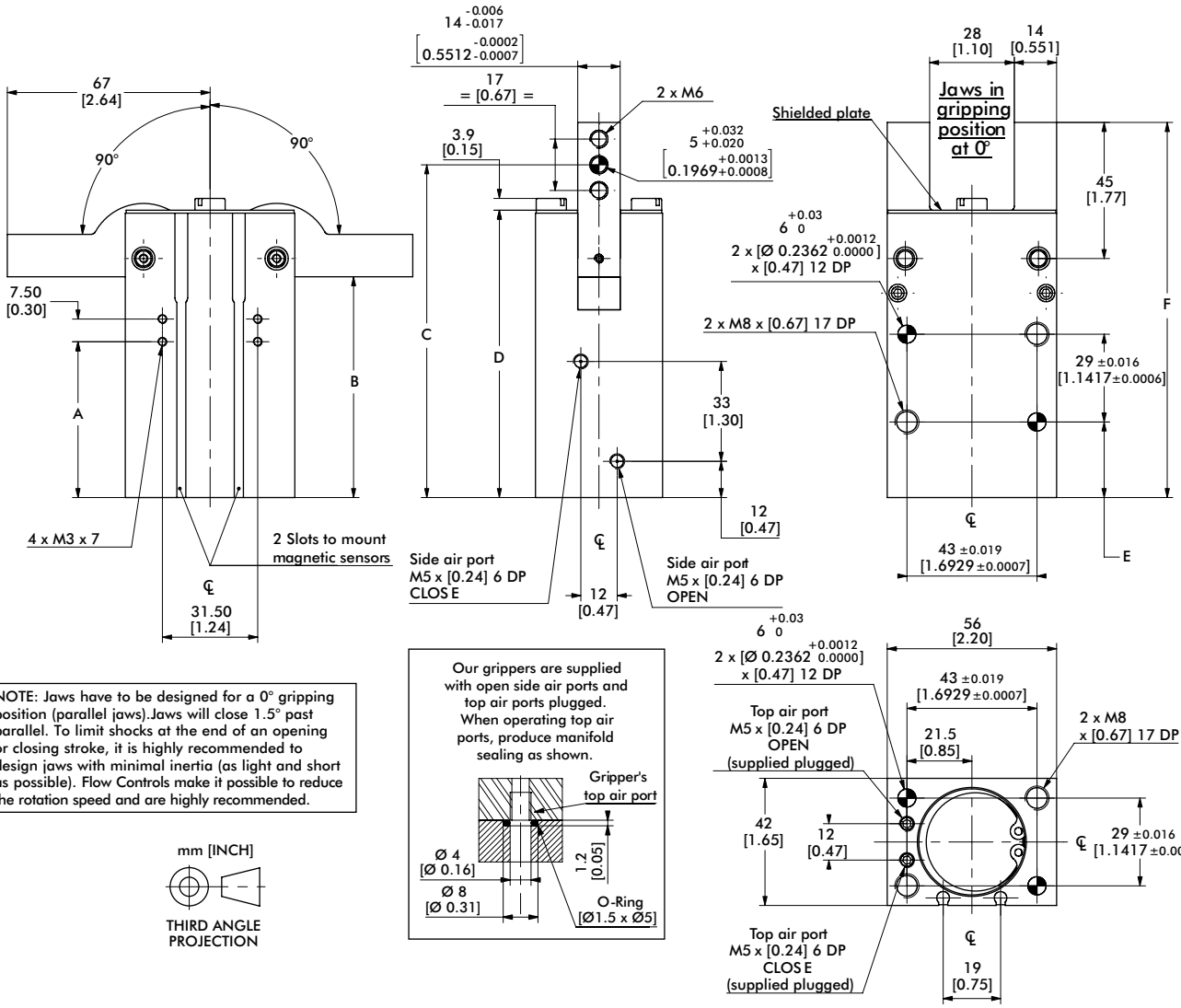

NOTE: Jaws have to be designed for a 0° gripping position (parallel jaws).Jaws will close 1.5° past parallel. To limit shocks at the end of an opening or closing stroke, it is highly recommended to design jaws with minimal inertia (as light and short as possible). Flow Controls make it possible to reduce the rotation speed and are highly recommended.

mm [INCH]

THIRD ANGLE PROJECTION

Our grippers are supplied with open side air ports and top air ports plugged. When operating top air ports, produce manifold sealing as shown.

Model	A	B	C	D	E	F
CT-32	51.50 [2.03]	73 [2.87]	110 [4.3307]	95 [3.74]	25 [0.9843]	124 [4.88]
CT-32-RE	72.50 [2.85]	94 [3.70]	131 [5.1575]	116 [4.57]	30 [1.811]	145 [5.71]

Dimensions in mm [in]

Mounting Accessories	Order #
Inductive Sensor Mounting Kit (mounts 2 sensors)	SDCT-25-32
Adjustment Stop Kit (1 shielded plate, 1 stop)	KP-CT32-BR

Seal Repair Kits	Order #
Buna-N Seal Repair Kit	SLKT-163
Viton® Seal Repair Kit	SLKT-163V

Loading Information

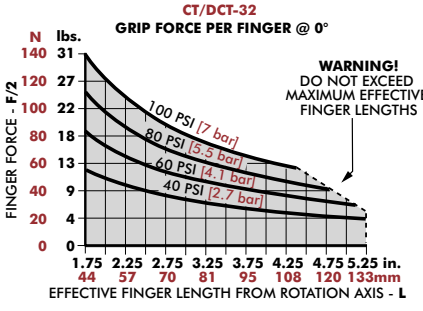

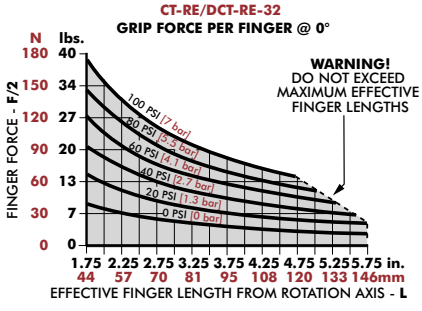

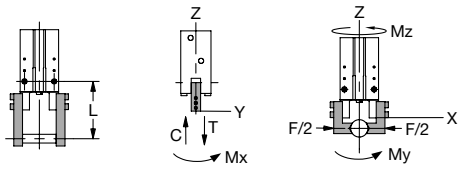

	Static
Maximum Tensile **T**	288 N [65 lbs]
Maximum Compressive **C**	288 N [65 lbs]
Maximum Moment M_x	16 Nm [142 in-lbs]
Maximum Moment M_y	16 Nm [142 in-lbs]
Maximum Moment M_z	16 Nm [142 in-lbs]

†Capacities are per set of jaws and are not simultaneous

CT-40/ -40-RE

Angular Grippers | Dimensions and Technical Specifications

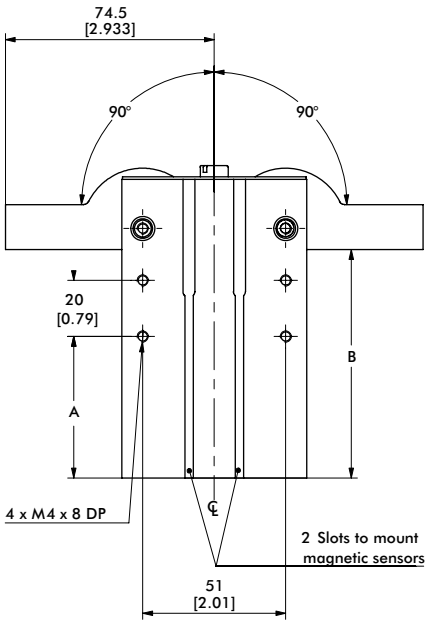

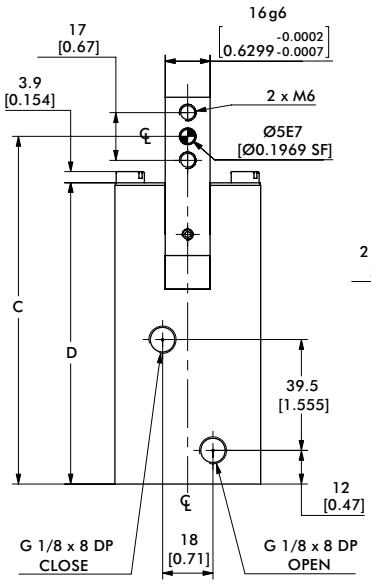

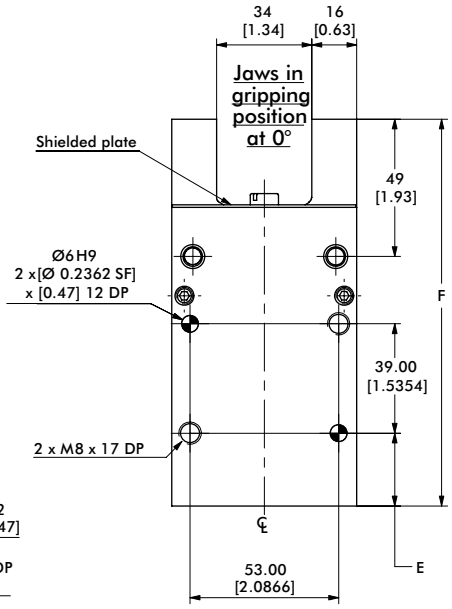

NOTE: Jaws have to be designed for a 0° gripping position (parallel jaws).Jaws will close 1.5° past parallel. To limit shocks at the end of an opening or closing stroke, it is highly recommended to design jaws with minimal inertia (as light and short as possible). Flow Controls make it possible to reduce the rotation speed and are highly recommended.

mm [INCH]

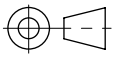

THIRD ANGLE PROJECTION

Our grippers are supplied with open side air ports and top air ports plugged. When operating top air ports, produce manifold sealing as shown.

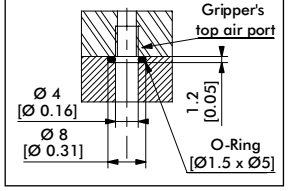

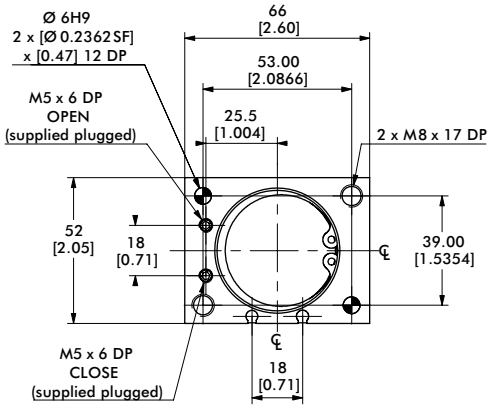

Model	A	B	C	D	E	F
CT-40	50.5 [1.988]	81.5 [3.209]	124.00 [4.8819]	107.5 [4.232]	26.00 [1.0236]	138 [5.43]
CT-40-RE	78 [3.07]	109 [4.29]	151.50 [5.9646]	135 [5.31]	32.00 [1.2598]	165.5 [6.516]

Dimensions in mm [in]

Mounting Accessories	Order #
Inductive Sensor Mounting Kit (mounts 2 sensors)	SDCT-40-63
Adjustment Stop Kit (1 shielded plate, 1 stop)	KP-CT40-BR

Seal Repair Kits	Order #
Buna-N Seal Repair Kit	SLKT-164
Viton® Seal Repair Kit	SLKT-164V

Loading Information

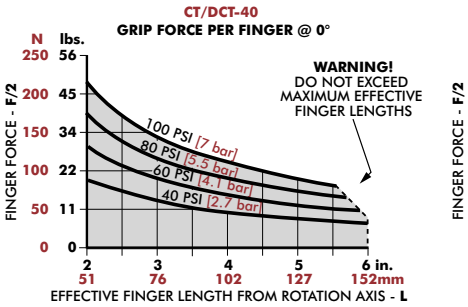

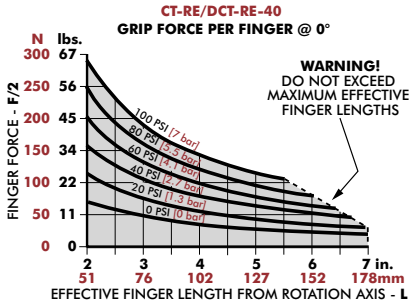

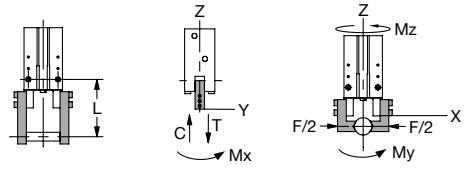

	Static
Maximum Tensile **T**	420 N [94 lbs]
Maximum Compressive **C**	420 N [94 lbs]
Maximum Moment M_X	22 Nm [195 in-lbs]
Maximum Moment M_Y	22 Nm [195 in-lbs]
Maximum Moment M_Z	22 Nm [195 in-lbs]

†Capacities are per set of jaws and are not simultaneous

CT-50/ -50-RE

Angular Grippers | Dimensions and Technical Specifications

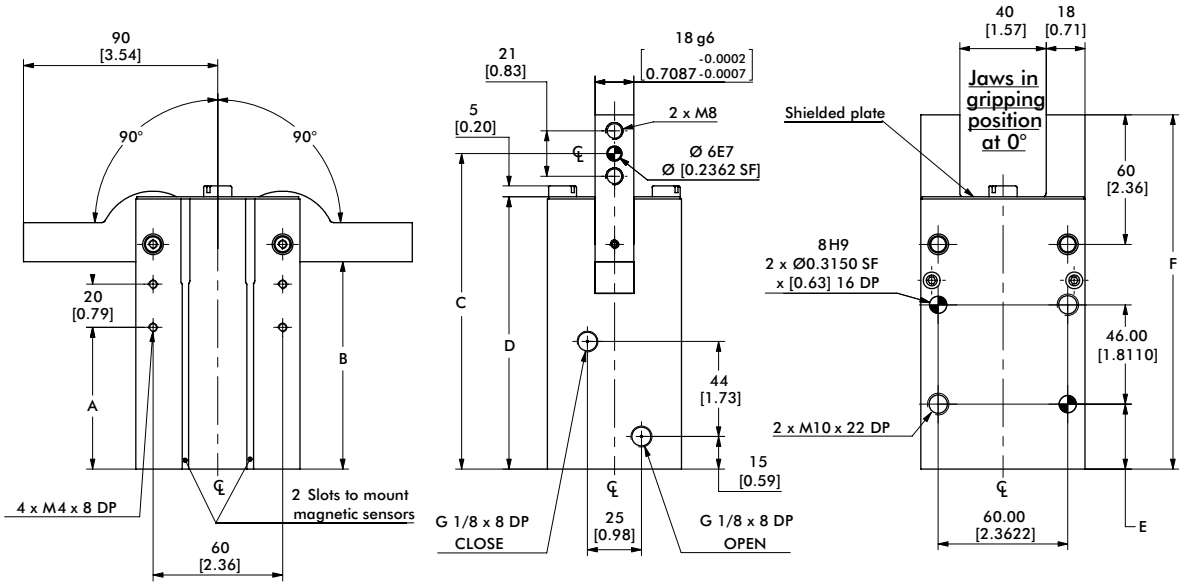

NOTE: Jaws have to be designed for a 0° gripping position (parallel jaws).Jaws will close 1.5° past parallel. To limit shocks at the end of an opening or closing stroke, it is highly recommended to design jaws with minimal inertia (as light and short as possible). Flow Controls make it possible to reduce the rotation speed and are highly recommended.

mm [INCH]

THIRD ANGLE PROJECTION

Our grippers are supplied with open side air ports and top air ports plugged. When operating top air ports, produce manifold sealing as shown.

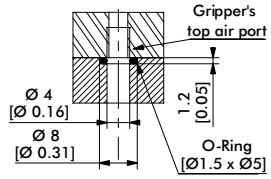

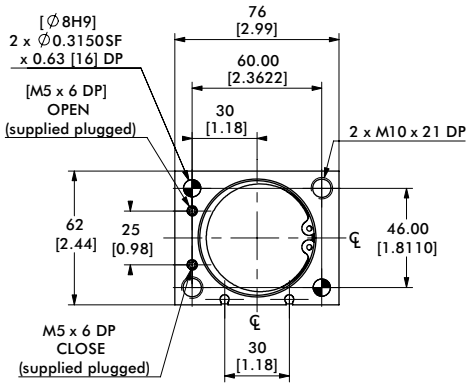

Model	A	B	C	D	E	F
CT-50	65.5 [2.579]	96 [3.78]	146.00 [5.7480]	126 [4.96]	30.00 [1.1811]	164 [6.46]
CT-50-RE	102.50 [4.035]	133 [5.24]	183.00 [7.2047]	163 [6.42]	40.00 [1.5748]	201 [7.91]

Dimensions in mm [in]

Mounting Accessories	Order #
Inductive Sensor Mounting Kit (mounts 2 sensors)	SDCT-40-63
Adjustment Stop Kit (1 shielded plate, 1 stop)	KP-CT50-BR

Seal Repair Kits	Order #
Buna-N Seal Repair Kit	SLKT-165
Viton® Seal Repair Kit	SLKT-165V

Loading Information

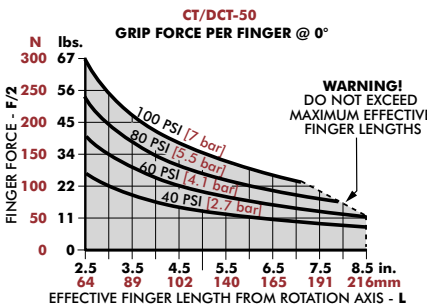

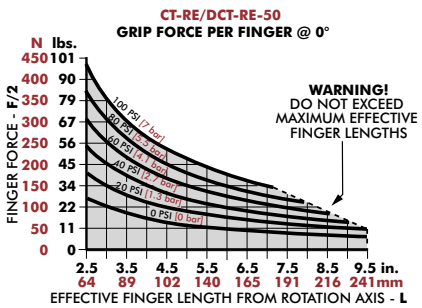

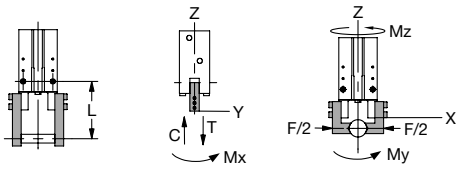

	Static
Maximum Tensile **T**	490 N [110 lbs]
Maximum Compressive **C**	490 N [110 lbs]
Maximum Moment $\mathbf{M_x}$	30 Nm [266 in-lbs]
Maximum Moment $\mathbf{M_y}$	30 Nm [266 in-lbs]
Maximum Moment $\mathbf{M_z}$	30 Nm [266 in-lbs]

†Capacities are per set of jaws and are not simultaneous

Dimensions and technical information are subject to change without notice

Notes

RA (CAM DRIVEN) SERIES

Angular Grippers | Features and Benefits | How To Order

Features:

- Highly reliable rugged general purpose gripper
- High grip force to size ratio due to cam driven design
- Fingers can be mounted on the side or top of jaws.
- Optional Viton® seals for high temperatures -30°C to +150°C [-20°F to +300°F]
- Use up to 2 magneto resistive sensors

Applications:

- Industrial assembly machines
- OEM pick and place machines
- General purpose gripping

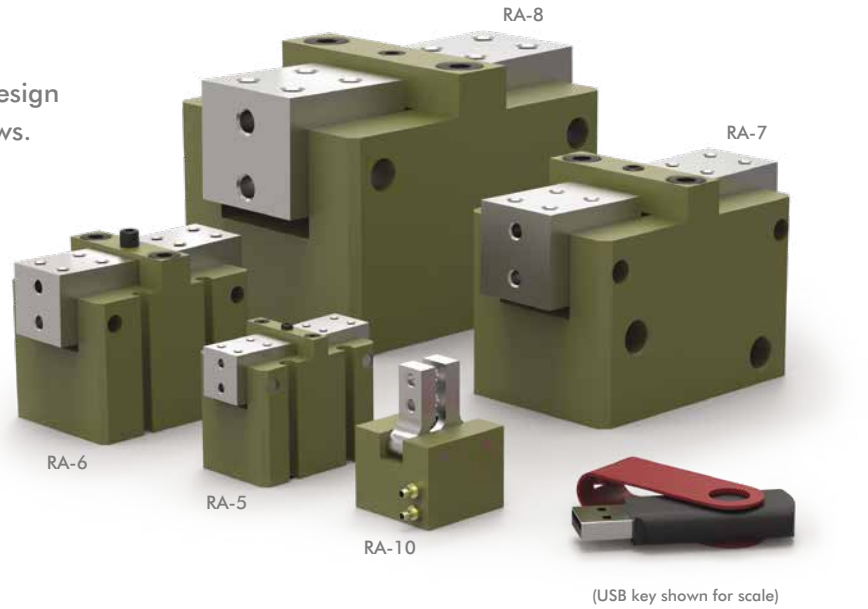

(USB key shown for scale)

How To Order

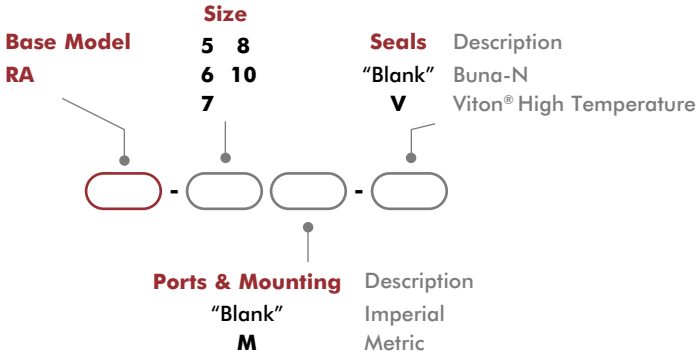

Accessories

Sensor Accessories	Model Numbers	Part Number	Qty/Unit
NPN Magneto Resistive Sensor with Quick Disconnect*	5, 6, 7, 8	OHSN-017	1-2
PNP Magneto Resistive Sensor with Quick Disconnect*	5, 6, 7, 8	OHSP-017	1-2
NPN Magneto Resistive Sensor 90° with Quick Disconnect*	5, 6, 7, 8	OHSN-011	1-2
PNP Magneto Resistive Sensor 90° with Quick Disconnect*	5, 6, 7, 8	OHSP-011	1-2
Quick Disconnect 2 Meter Cable Length*	5, 6, 7, 8	CABL-010	1-2
Quick Disconnect 5 Meter Cable Length*	5, 6, 7, 8	CABL-013	1-2

Pneumatic Accessories	Model Numbers	Part Number	Qty/Unit
Fail Safe Valve (Imperial)	5, 6	OFSV-001	1
Fail Safe Valve (Metric)	5, 6	OFSV-004	1
Fail Safe Valve (Imperial)	7, 8	OFSV-002	1
Fail Safe Valve (Metric)	7, 8	OFSV-005	1

*Sensor and cable sold separately.

Specifications	Units	5	6	7
Total Rated Grip Force **F** @ 7 bar [100 psi]	N [lbs]	89 [20]	196 [44]	534 [120]
Total Stroke		15° per finger (30° total)		
Open Stroke Adjustment		15° per finger (30° total)		10° per finger (20° total)
Weight	kg [lbs]	0.11 [0.25]	0.31 [0.69]	0.8 [1.8]
Pressure Range	bar [psi]	3-7 [40-100]		
Ingress Protection Class (IP)		IP43		
Displacement	cm^3 [in^3]	2.1 [0.13]	4.9 [0.300]	9.8 [0.601]
Temperature Range (Buna-N seals)	°C [°F]	-35°~80° [-30°~180°]		
Temperature Range (Viton® seals)	°C [°F]	-30°~150° [-20°~300°]		
Actuation	sec	0.10	0.11	0.15
Accuracy	mm [in]	±0.13 [±0.005]		
Repeatability	mm [in]	±0.08 [±0.003]		
Valve to Actuate		4-way, 2-position		

Specifications	Units	8	10
Total Rated Grip Force **F** @ 7 bar [100 psi]	N [lbs]	801 [180]	71 [16]
Total Stroke		15° per finger (30° total)	
Open Stroke Adjustment		10° per finger (20° total)	--
Weight	kg [lbs]	2.1 [4.6]	0.03 [0.063]
Pressure Range	bar [psi]	3-7 [40-100]	
Ingress Protection Class (IP)		IP43	
Displacement	cm^3 [in^3]	21.6 [1.320]	0.4 [0.026]
Temperature Range (Buna-N seals)	°C [°F]	-35°~80° C [-30°~180° F]	
Temperature Range (Viton® seals)	°C [°F]	-30°~150° C [-20°~300° F]	
Actuation	sec	0.23	0.08
Accuracy	mm [in]	±0.13 [±0.005]	±0.08 [±0.003]
Repeatability	mm [in]	±0.08 [±0.003]	±0.03 [±0.001]
Valve to Actuate		4-way, 2-position	

RA-5

Angular Grippers | Dimensions and Technical Specifications

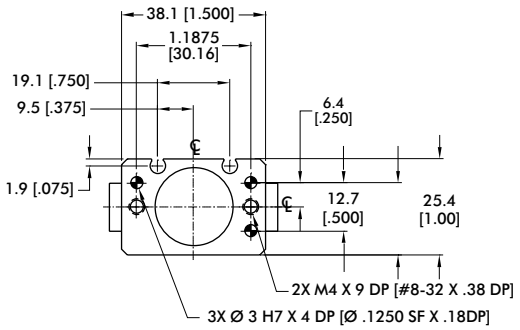

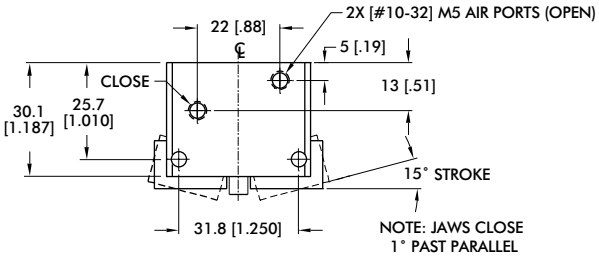

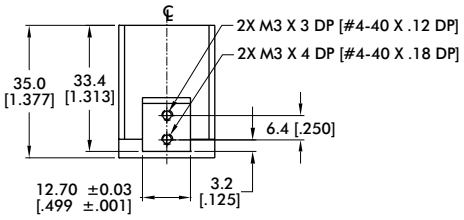

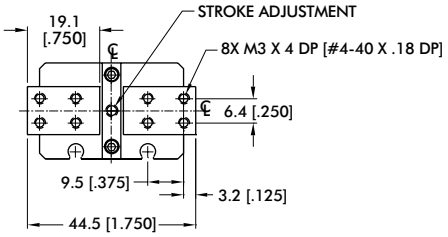

mm [INCH]

THIRD ANGLE
PROJECTION

Seal Repair Kits	Order #
Buna-N Seal Repair Kit	SLKT-022
Viton® Seal Repair Kit	SLKT-022V

Loading Information

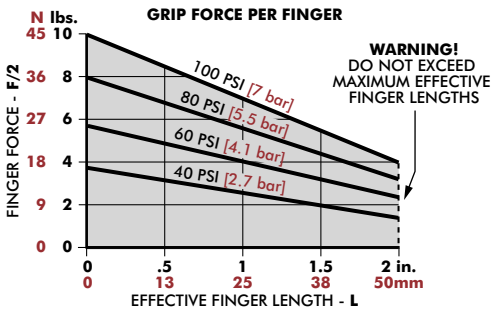

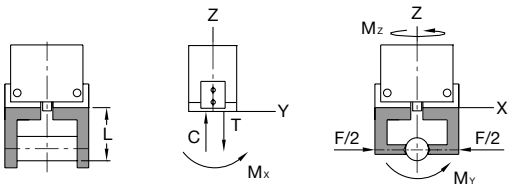

RA-5	Static
Maximum Tensile **T**	44 N [10 lbs]
Maximum Compressive **C**	44 N [10 lbs]
Maximum Moment M_x	1.1 Nm [10 in-lbs]
Maximum Moment M_y	1.1 Nm [10 in-lbs]
Maximum Moment M_z	1.1 Nm [10 in-lbs]

†Capacities are per set of jaws and are not simultaneous

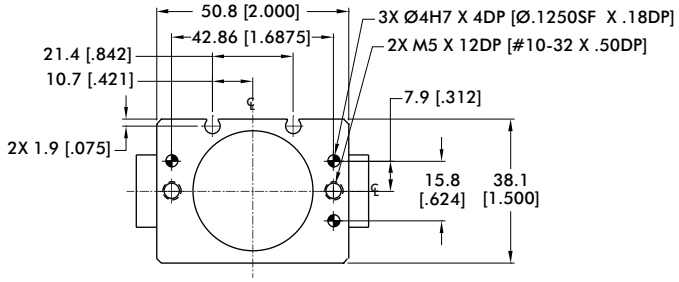

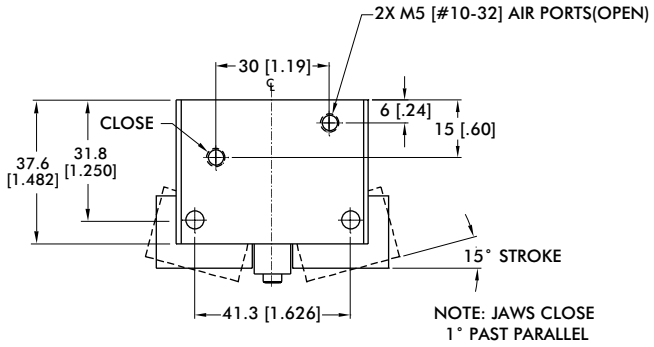

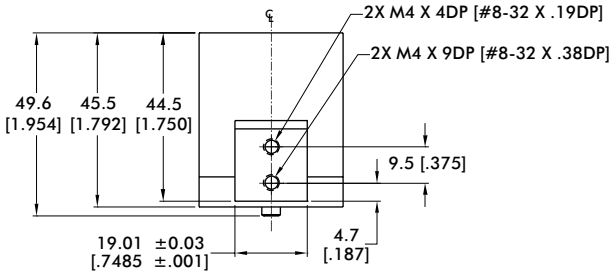

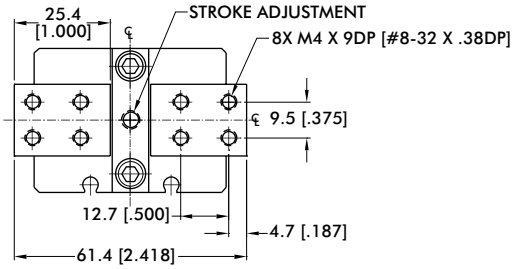

mm [INCH]

THIRD ANGLE PROJECTION

Seal Repair Kits	Order #
Buna-N Seal Repair Kit	SLKT-023
Viton® Seal Repair Kit	SLKT-023V

Loading Information

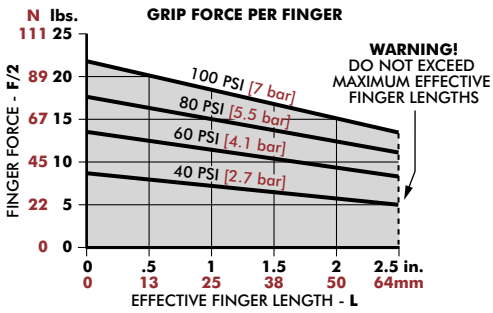

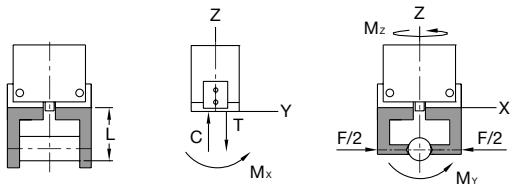

RA-6	Static
Maximum Tensile **T**	89 N [20 lbs]
Maximum Compressive **C**	89 N [20 lbs]
Maximum Moment M_x	2.3 Nm [20 in-lbs]
Maximum Moment M_y	2.3 Nm [20 in-lbs]
Maximum Moment M_z	2.3 Nm [20 in-lbs]

†Capacities are per set of jaws and are not simultaneous

RA-7

Angular Grippers | Dimensions and Technical Specifications

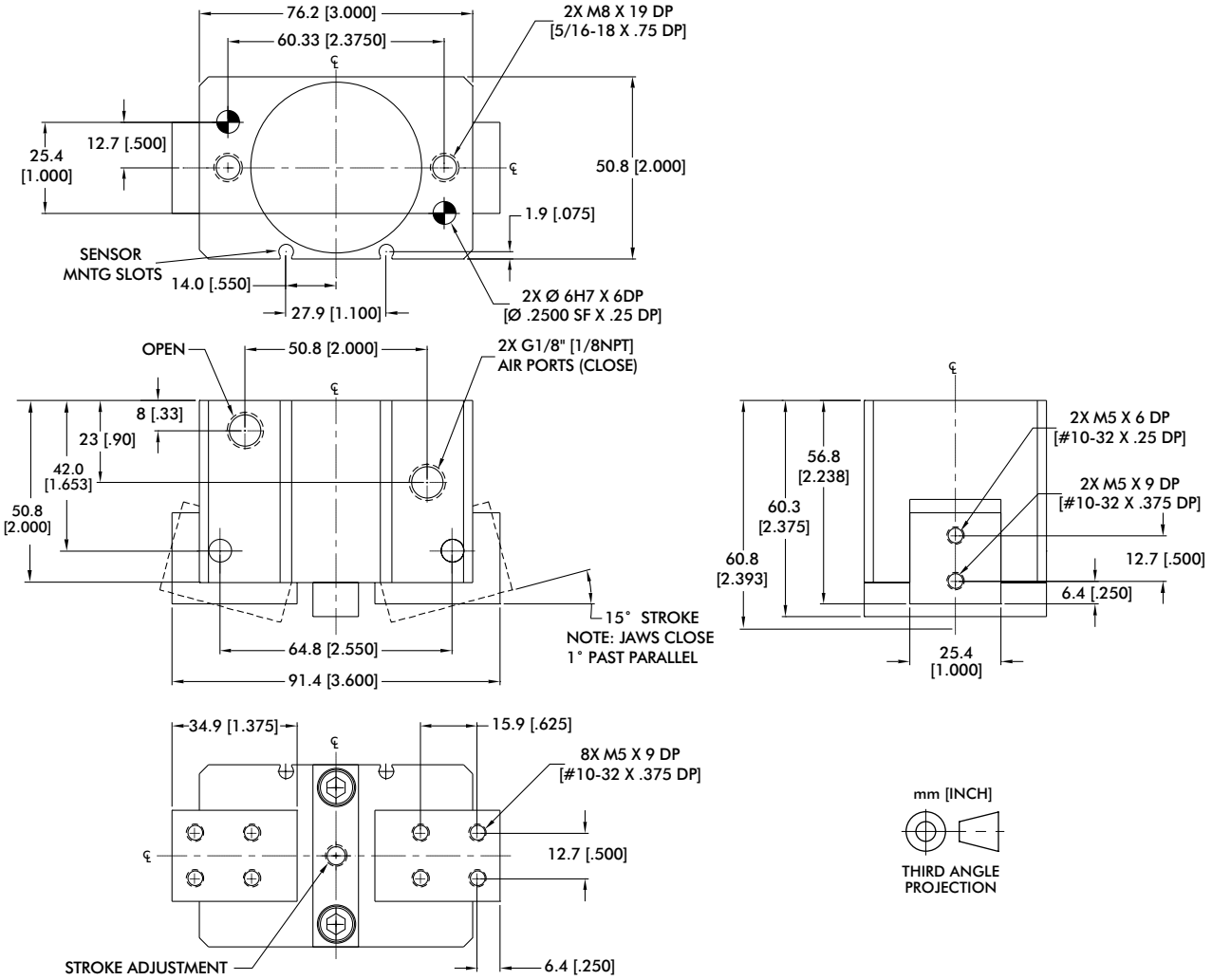

Seal Repair Kits	Order #
Buna-N Seal Repair Kit	SLKT-118
Viton® Seal Repair Kit	SLKT-118V

Loading Information

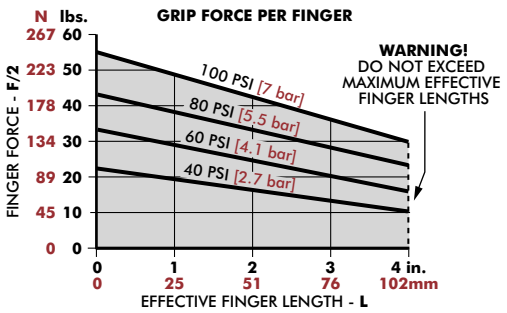

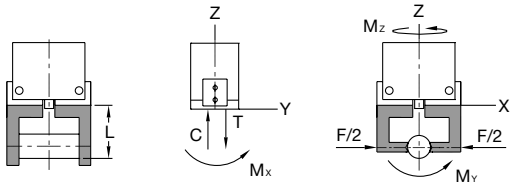

RA-7	Static
Maximum Tensile **T**	267 N [60 lbs]
Maximum Compressive **C**	267 N [60 lbs]
Maximum Moment M_x	6.8 Nm [60 in-lbs]
Maximum Moment M_y	6.8 Nm [60 in-lbs]
Maximum Moment M_z	6.8 Nm [60 in-lbs]

†Capacities are per set of jaws and are not simultaneous

Dimensions and technical information are subject to change without notice

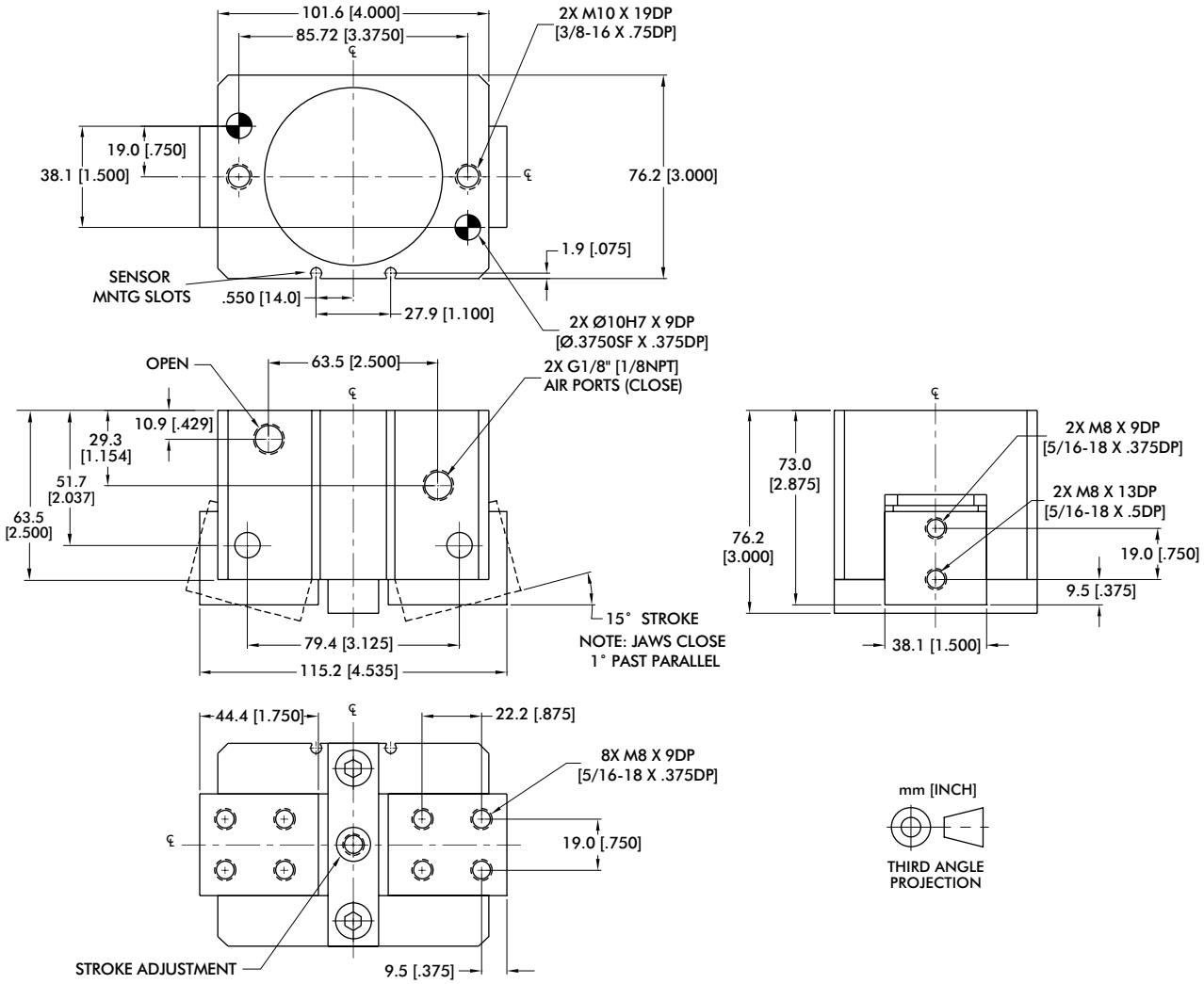

Seal Repair Kits	Order #
Buna-N Seal Repair Kit	SLKT-119
Viton® Seal Repair Kit	SLKT-119V

Loading Information

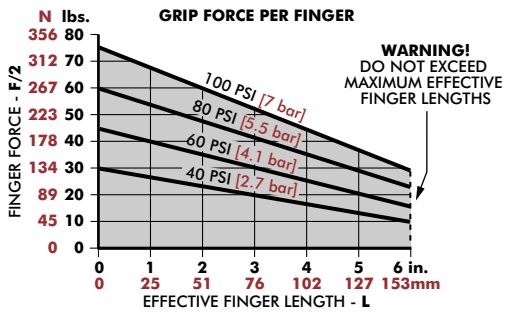

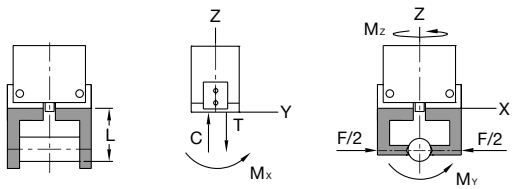

RA-8	Static
Maximum Tensile **T**	400 N [90 lbs]
Maximum Compressive **C**	400 N [90 lbs]
Maximum Moment $\mathbf{M_x}$	10.2 Nm [90 in-lbs]
Maximum Moment $\mathbf{M_y}$	10.2 Nm [90 in-lbs]
Maximum Moment $\mathbf{M_z}$	10.2 Nm [90 in-lbs]

†Capacities are per set of jaws and are not simultaneous

RA-10

Angular Grippers | Dimensions and Technical Specifications

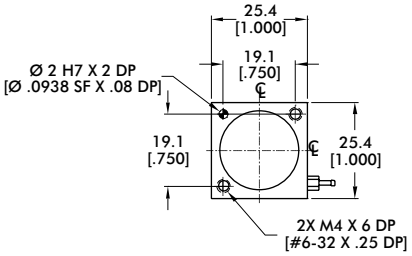

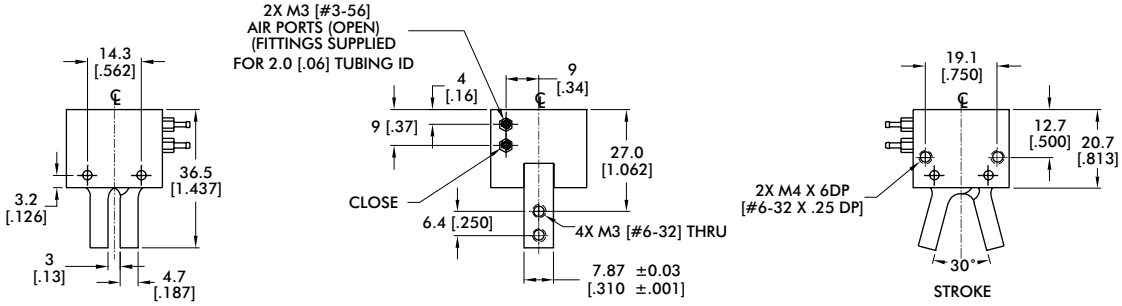

mm [INCH]

THIRD ANGLE PROJECTION

Seal Repair Kits	Order #
Buna-N Seal Repair Kit	SLKT-018
Viton® Seal Repair Kit	SLKT-018V

Loading Information

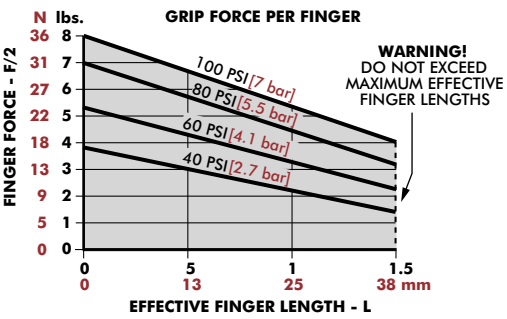

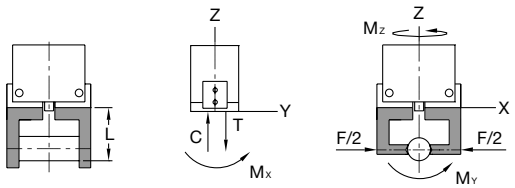

RA-10	Static
Maximum Tensile **T**	22 N [5 lbs]
Maximum Compressive **C**	22 N [5 lbs]
Maximum Moment $\mathbf{M_x}$	0.6 Nm [5 in-lbs]
Maximum Moment $\mathbf{M_y}$	0.6 Nm [5 in-lbs]
Maximum Moment $\mathbf{M_z}$	0.6 Nm [5 in-lbs]

†Capacities are per set of jaws and are not simultaneous

Dimensions and technical information are subject to change without notice

Notes

RA (TOGGLE LOCK) SERIES

Angular Grippers | Features and Benefits | How To Order

Features:

- Highly reliable rugged general purpose gripper
- Very high grip force to size ratio due to toggle mechanism
- True Failsafe with toggle locking jaws—gripper cannot release part without air
- Optional Viton® seals for high temperatures -30°C to +150°C [-20°F to +300°F]
- Optional inductive sensors and flow controls

Applications:

- Applications requiring internal/external gripping with toggle locking
- Internal gripping Applications without locking
- Industrial assembly machines
- OEM pick and place machines



(USB key shown for scale)

How To Order

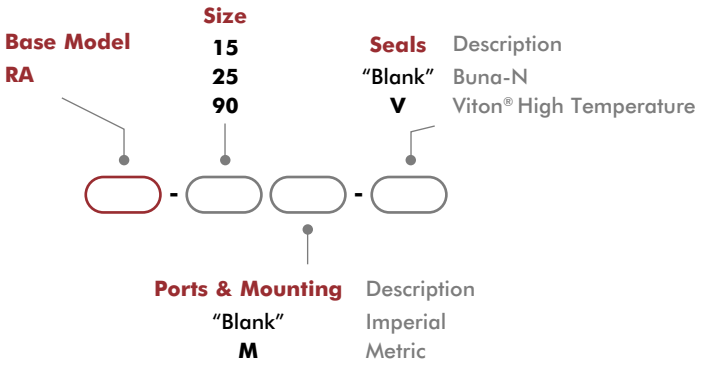

Accessories

Sensor Accessories	Model Numbers	Part Number	Qty/Unit
Sensor Mounting Kit, Mounts 2 Inductive Sensors (Imperial/Metric)	See Datasheet		1
NPN Inductive Sensor with Quick Disconnect*	15, 90	OISN-019	1-2
PNP Inductive Sensor with Quick Disconnect*	15, 90	OISP-019	1-2
NPN Inductive Sensor with Quick Disconnect*	25	OISN-014	1-2
PNP Inductive Sensor with Quick Disconnect*	25	OISP-014	1-2
NPN Magneto Resistive Sensor with Quick Disconnect*	90	OHSN-017	1-2
PNP Magneto Resistive Sensor with Quick Disconnect*	90	OHSP-017	1-2
NPN Magneto Resistive Sensor 90° with Quick Disconnect*	90	OHSN-011	1-2
PNP Magneto Resistive Sensor 90° with Quick Disconnect*	90	OHSP-011	1-2
Quick Disconnect 2 Meter Cable Length*	All Models	CABL-010	1-2
Quick Disconnect 5 Meter Cable Length*	All Models	CABL-013	1-2

Pneumatic Accessories	Model Numbers	Part Number	Qty/Unit
#10-32 to 1/4" OD Tube Flow Controls	90	VLVF-007	2
M5 to 6mm OD Tube Flow Controls	90	VLVF-008	2

*Sensor and cable sold separately.

Dimensions and technical information are subject to change without notice

Specifications	Units	15	25	90
Total Rated Grip Force **F** @ 100 psi [7 bar]	N [lbs]	311 [70]	1112 [250]	356 [80]
Total Stroke		6° per finger (12° total)		90° per finger (180° total)
Stoke Adjustment		--		45° per finger (90° total)
Weight	kg [lbs]	0.14 [0.31]	0.48 [1.06]	0.20 [0.438]
Pressure Range	bar [psi]	3-7 [40-100]		
Ingress Protection Class (IP)		IP43		
Displacement	cm^3 [in^3]	1.8 [0.110]	0.8 [0.046]	7.5 [0.460]
Temperature Range (Buna-N seals)	°C [°F]	-35°~80° [-30°~180°]		
Temperature Range (Viton® seals)	°C [°F]	-30°~150° [-20°~300°]		
Actuation	sec	0.10	0.12	0.16
Accuracy	mm [in]	±0.08 [±0.003]		
Repeatability	mm [in]	±0.03 [±0.0001]		
Valve to Required Actuate Double Acting		4-way, 2-position		

RA-15

Angular Grippers | Dimensions and Technical Specifications

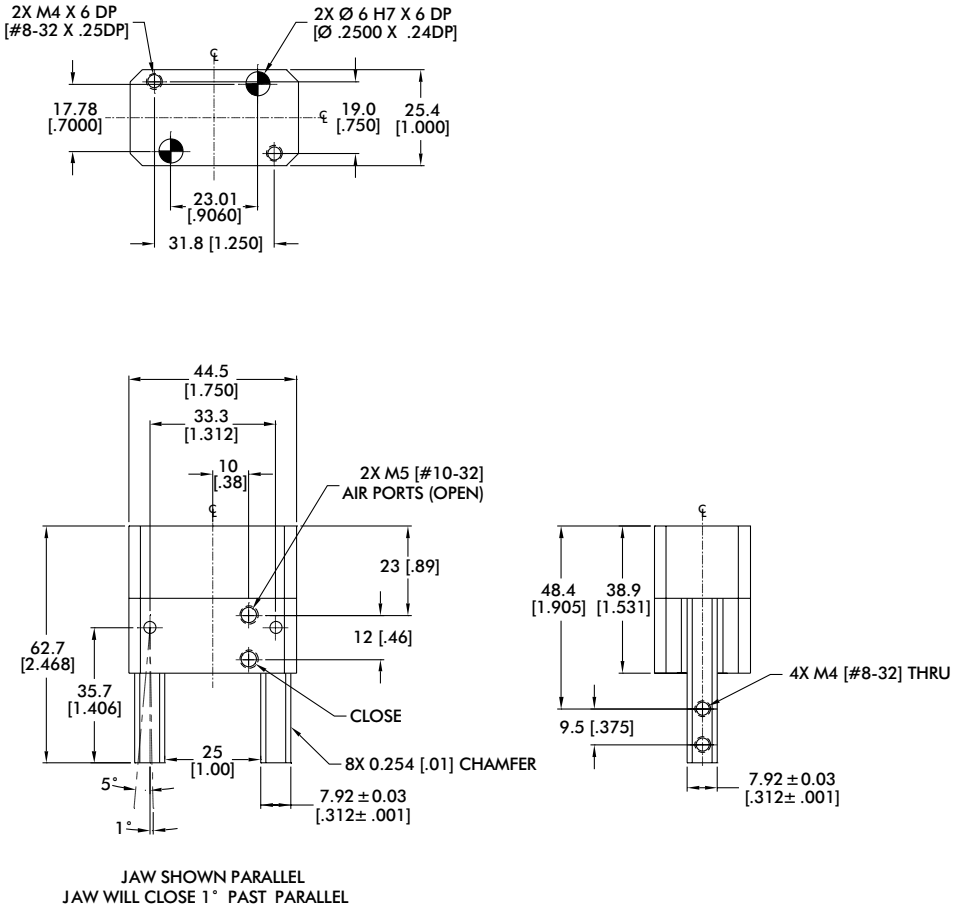

JAW SHOWN PARALLEL
JAW WILL CLOSE 1° PAST PARALLEL

mm [INCH]

THIRD ANGLE PROJECTION

Sensor Accessories	Order #
Inductive Sensor Mounting Kit (mounts 2 sensors)	OSMK-018

Seal Repair Kits	Order #
Buna-N Seal Repair Kit	SLKT-019
Viton® Seal Repair Kit	SLKT-019V

Loading Information

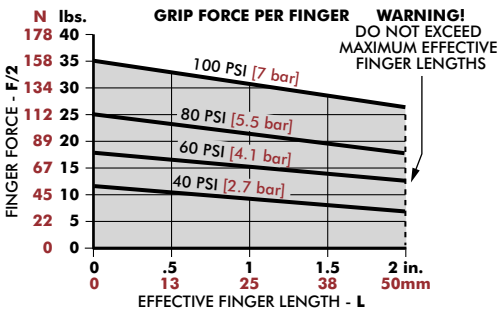

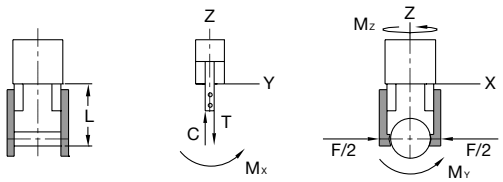

RA-15	Static
Maximum Tensile **T**	222 N [50 lbs]
Maximum Compressive **C**	222 N [50 lbs]
Maximum Moment M_x	6.8 Nm [60 in-lbs]
Maximum Moment M_y	13.6 Nm [120 in-lbs]
Maximum Moment M_z	6.8 Nm [60 in-lbs]

†Capacities are per set of jaws and are not simultaneous

Dimensions and technical information are subject to change without notice

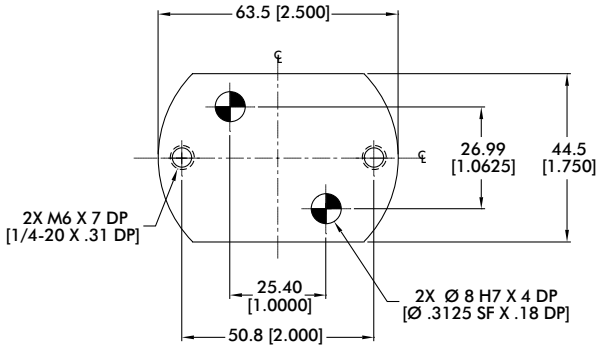

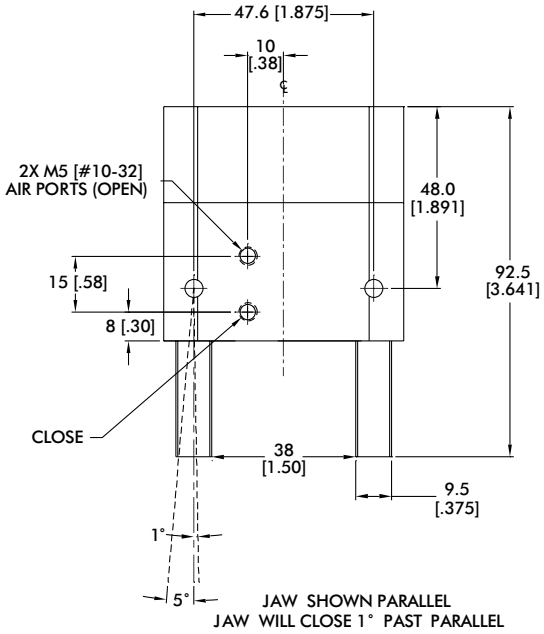

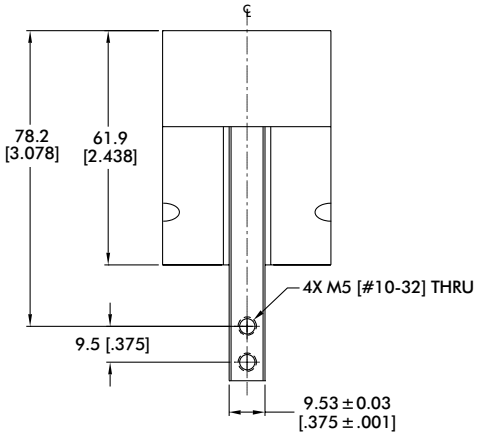

mm [INCH]

THIRD ANGLE PROJECTION

Sensor Accessories	Order #
Inductive Sensor Mounting Kit (mounts 2 sensors)	OSMK-019

Seal Repair Kits	Order #
Buna-N Seal Repair Kit	SLKT-020
Viton® Seal Repair Kit	SLKT-020V

Loading Information

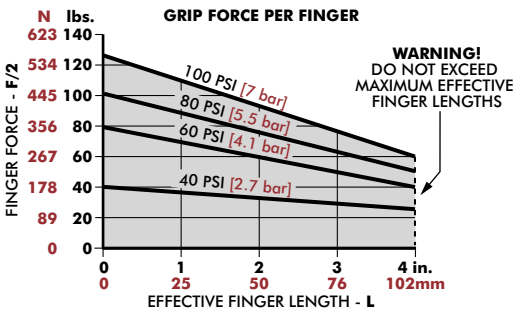

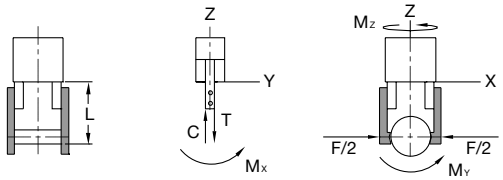

RA-25	Static
Maximum Tensile **T**	667 N [150 lbs]
Maximum Compressive **C**	667 N [150 lbs]
Maximum Moment M_x	22.6 Nm [200 in-lbs]
Maximum Moment M_y	33.9 Nm [300 in-lbs]
Maximum Moment M_z	22.6 Nm [200 in-lbs]

[1]Capacities are per set of jaws and are not simultaneous

RA-90

Angular Grippers | Dimensions and Technical Specifications

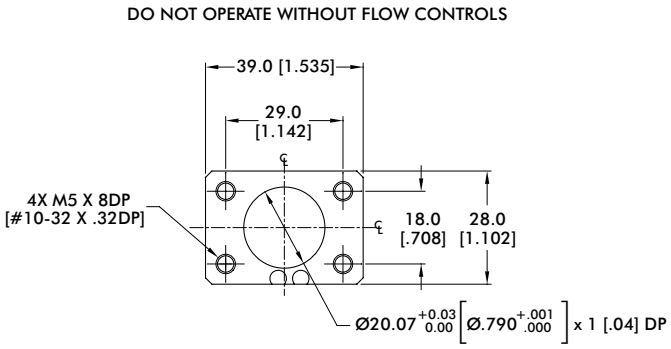

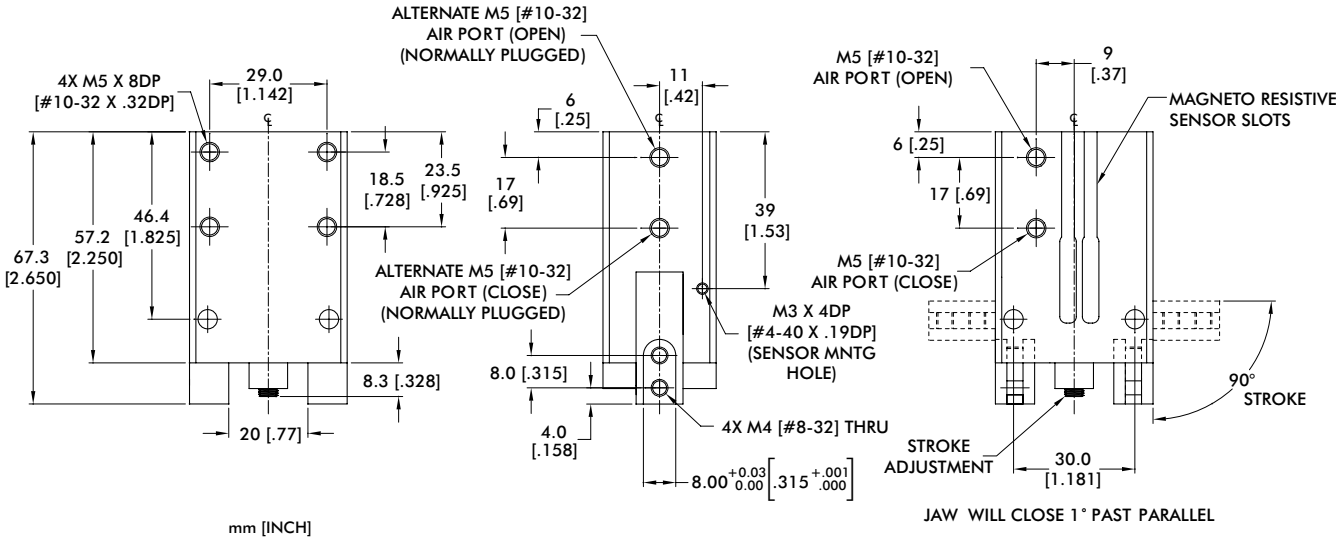

Sensor Accessories	Order #
Inductive Sensor Mounting Kit (mounts 2 sensors)	OSMK-003

Seal Repair Kits	Order #
Buna-N Seal Repair Kit	SLKT-024
Viton® Seal Repair Kit	SLKT-024V

Loading Information

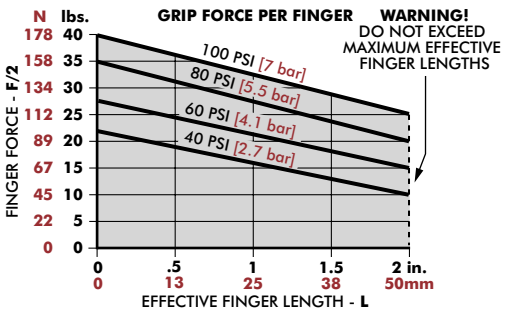

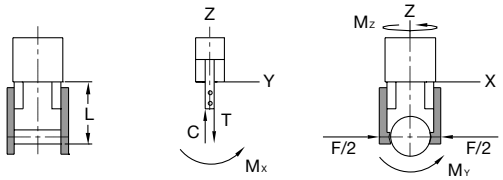

RA-90	Static
Maximum Tensile **T**	222 N [50 lbs]
Maximum Compressive **C**	222 N [50 lbs]
Maximum Moment M_x	6.8 Nm [60 in-lbs]
Maximum Moment M_y	13.6 Nm [120 in-lbs]
Maximum Moment M_z	6.8 Nm [60 in-lbs]

†Capacities are per set of jaws and are not simultaneous

Notes

RUA SERIES

Angular Grippers | Features and Benefits | How To Order

Features:

- Robust, shielded, high force gripper
- Optional springs for part retention in case of air loss or increased grip-force
- Side or top manifold air ports
- Optional Viton® seals for high temperatures -30°C to +150°C [-20°F to +300°F]
- Boot options available for weld splatter applications

Applications:

- Welding and sandblasting applications
- Paintbooth applications
- Heavy part gripping solutions



How To Order

Base Model	Size	Spring	Description
RUA	62M 142M	"Blank"	None
	82M 162M	RE	Spring Closed
	112M	RI	Spring Open

Seals	Description
"Blank"	Buna-N
V	Viton® High Temperature

Power	Description
P	Pneumatic
H	Hydraulic

Inductive Case	Description
"Blank"	None
KT1	Sensing Range KT1
KT2	Sensing Range KT2

Accessories

Sensor Accessories	Model Numbers	Part Number	Qty/Unit
NPN Magneto Resistive Sensor with Quick Disconnect* **	62M, 82M, 112M	OHSN-017	1-2
PNP Magneto Resistive Sensor with Quick Disconnect* **	62M, 82M, 112M	OHSP-017	1-2
NPN Magneto Resistive Sensor 90° with Quick Disconnect* **	62M, 82M, 112M	OHSN-011	1-2
PNP Magneto Resistive Sensor 90° with Quick Disconnect* **	62M, 82M, 112M	OHSP-011	1-2
Replacement PNP Double Inductive Sensor* †	All Models	KT15	1
Quick Disconnect 2 Meter Cable Length*	62M, 82M, 112M	CABL-010	1-2
Quick Disconnect 5 Meter Cable Length*	62M, 82M, 112M	CABL-013	1-2
Quick Disconnect 2 Meter Cable Length (for KT Inductive Sensor)*	All Models	CABL-014	1-2

*Sensor and cable sold separately. **Piston magnet standard. †Requires KT1 or KT2 sensor option.

Dimensions and technical information are subject to change without notice

Specifications	Units	62M	82M	112M
Total Rated Grip Force **L**=25mm [1 in.] @ 0°				
@ 7 bar [100 psi], w/spring	N [lbs]	384 [86]	1228 [276]	2150 [483]
@ 7 bar [100 psi], w/o spring	N [lbs]	313 [70]	922 [207]	1600 [360]
Total Stroke		16.8° per finger (33.6° total)	15.9° per finger (31.8° total)	19.1° per finger (38.2° total)
Weight	kg [lbs]	0.39 [0.86]	0.70 [1.55]	1.70 [3.75]
Pressure Range without springs	bar [psi]	2-7 [30-100]		
Pressure Range with springs **-RE, -RI**	bar [psi]	3-7 [45-100]		
Ingress Protection Class (IP)		IP54		
Displacement	cm^3 [in^3]	12 [0.73]	35 [2.14]	85 [5.19]
Temperature Range (Buna-N seals)	°C [°F]	-35°~80° [-30°~180°]		
Temperature Range (Viton® seals)	°C [°F]	-30°~150° [-20°~300°]		
Actuation	sec	0.18	0.10	0.35
Accuracy	mm [in]	±0.05 [±0.002]		±0.08 [±0.003]
Repeatability	mm [in]	±0.02 [±0.0008]		±0.03 [±0.0008]
Valve to Required Actuate Single Acting		3-way, 2-position		
Valve to Required Actuate Double Acting		4-way, 2-position		

Specifications	Units	142M	162M
Total Rated Grip Force **L**=25mm [1 in.] @ 0°			
@ 7 bar [100 psi], w/spring	N [lbs]	5775 [1298]	5490 [1234]
@ 7 bar [100 psi], w/o spring	N [lbs]	3941 [886]	3790 [853]
Total Stroke		17.6° per finger (35.2° total)	17.2° per finger (34.4° total)
Weight	kg [lbs]	4.1 [9.05]	6.7 [14.8]
Pressure Range without springs	bar [psi]	2-7 [30-100]	
Pressure Range with springs **-RE, -RI**	bar [psi]	4-7 [60-100]	
Ingress Protection Class (IP)		IP54	
Displacement	cm^3 [in^3]	215 [13.2]	322 [19.7]
Temperature Range (Buna-N seals)		-35°~80° [-30°~180°]	
Temperature Range (Viton® seals standard)	°C [°F]	-30°~150° [-20°~300°]	
Actuation	sec	0.60	0.80
Accuracy	mm [in]	±0.8 [±0.003]	
Repeatability	mm [in]	±0.03 [±0.0008]	
Valve to Required Actuate Single Acting		3-way, 2-position	
Valve to Required Actuate Double Acting		4-way, 2-position	

RUA-62M

Angular Grippers | Dimensions and Technical Specifications

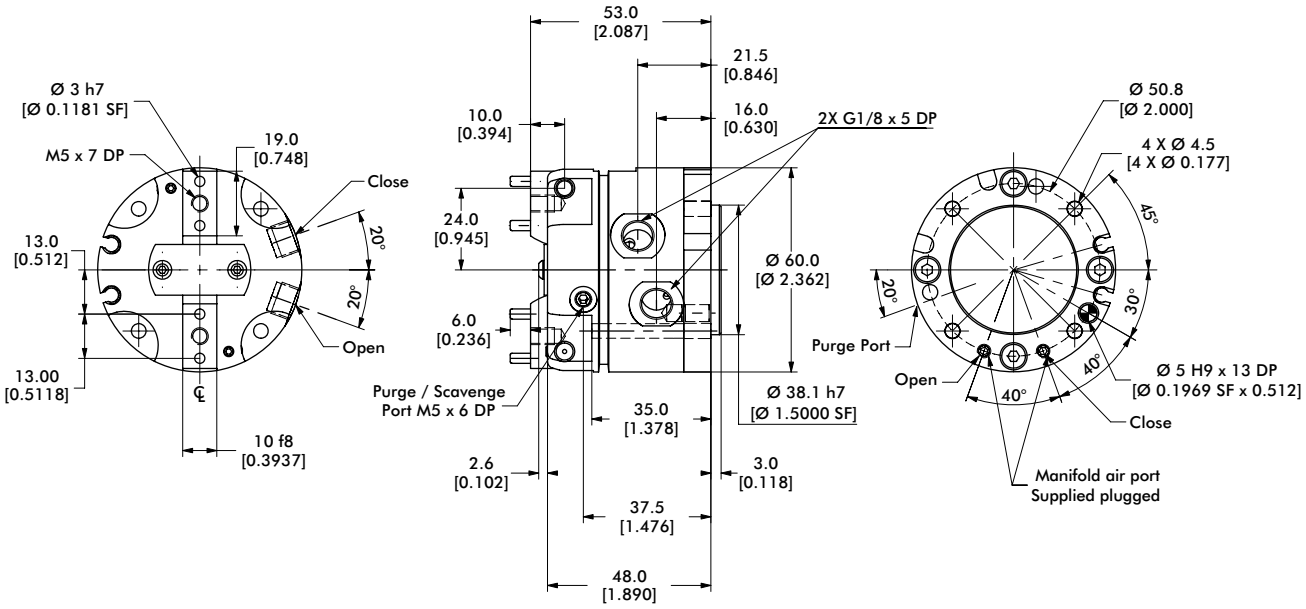

mm [INCH]

THIRD ANGLE PROJECTION

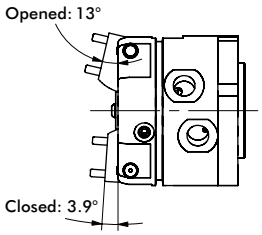

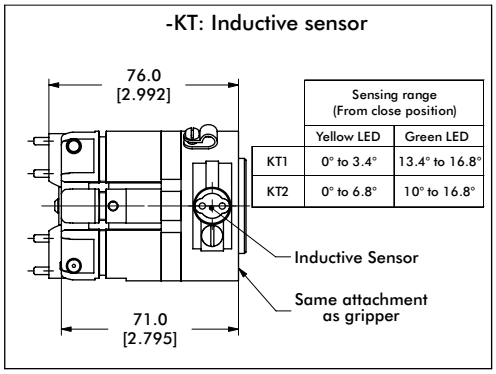

Protective Boots	Order #
PVC Sealed Boot Kit (2 interfaces, 1 collar, 1 boot)	SLKT-367
Kevlar Sealed Boot Kit (2 interfaces, 1 collar, 1 boot)	SLKT-368

Seal Repair Kits	Order #
Seal Repair Kit Standard (Buna-N)	SLKT-156
Seal Repair Kit (Viton®)	SLKT-156V
Seal Repair Kit (Hydraulic)	SLKT-330

Loading Information

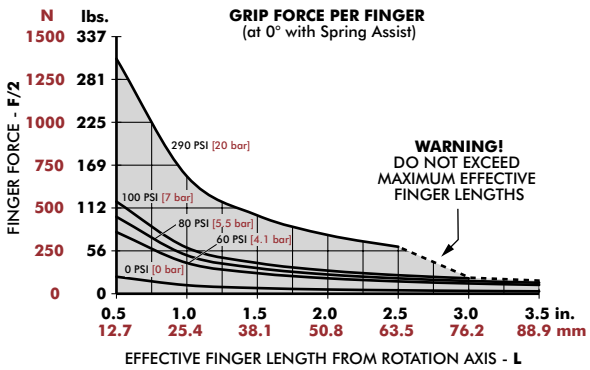

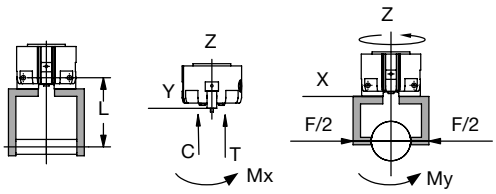

RUA-62M	Static
Maximum Tensile **T**	236 N [53 lbs]
Maximum Compressive **C**	236 N [53 lbs]
Maximum Moment $\mathbf{M_x}$	12.5 Nm [111 in-lbs]
Maximum Moment $\mathbf{M_y}$	34.5 Nm [305 in-lbs]
Maximum Moment $\mathbf{M_z}$	12.5 Nm [111 in-lbs]

†Capacities are per set of jaws and are not simultaneous

Angular Grippers | Dimensions and Technical Specifications

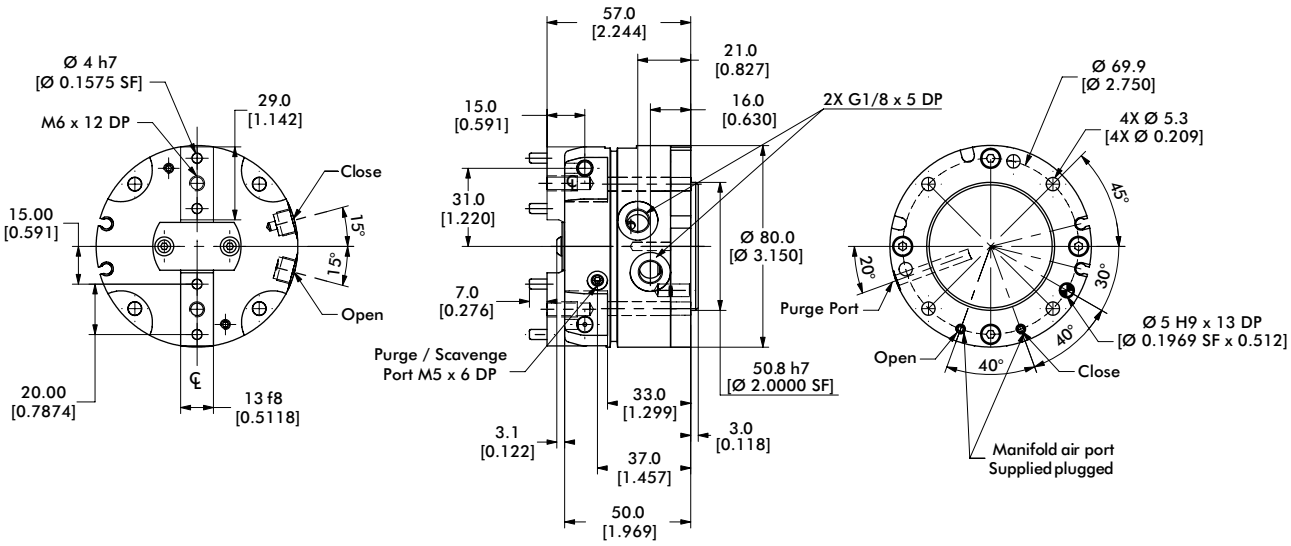

mm [INCH]

THIRD ANGLE PROJECTION

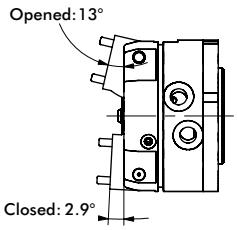

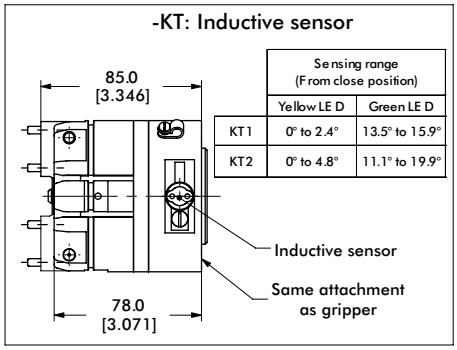

Protective Boots	Order #
PVC Sealed Boot Kit (2 interfaces, 1 collar, 1 boot)	SLKT-370
Kevlar Sealed Boot Kit (2 interfaces, 1 collar, 1 boot)	SLKT-371

Seal Repair Kits	Order #
Seal Repair Kit Standard (Buna-N)	SLKT-157
Seal Repair Kit (Viton®)	SLKT-157V
Seal Repair Kit (Hydraulic)	SLKT-331

Loading Information

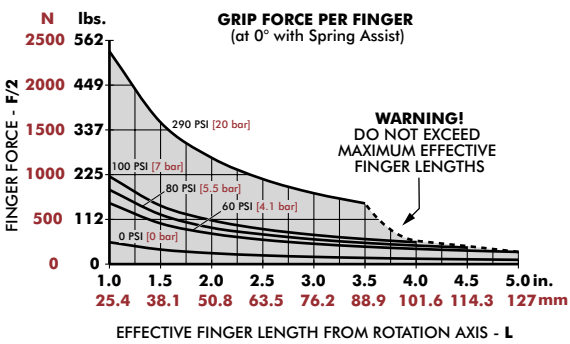

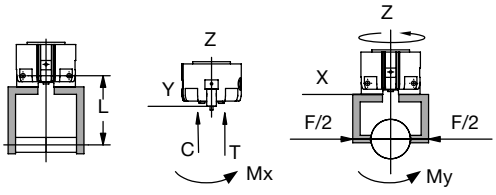

RUA-82M	Static
Maximum Tensile **T**	290 N [65 lbs]
Maximum Compressive **C**	290 N [65 lbs]
Maximum Moment M_x	19 Nm [168 in-lbs]
Maximum Moment M_y	121 Nm [1071 in-lbs]
Maximum Moment M_z	19 Nm [168 in-lbs]

†Capacities are per set of jaws and are not simultaneous

RUA-112M

Angular Grippers | Dimensions and Technical Specifications

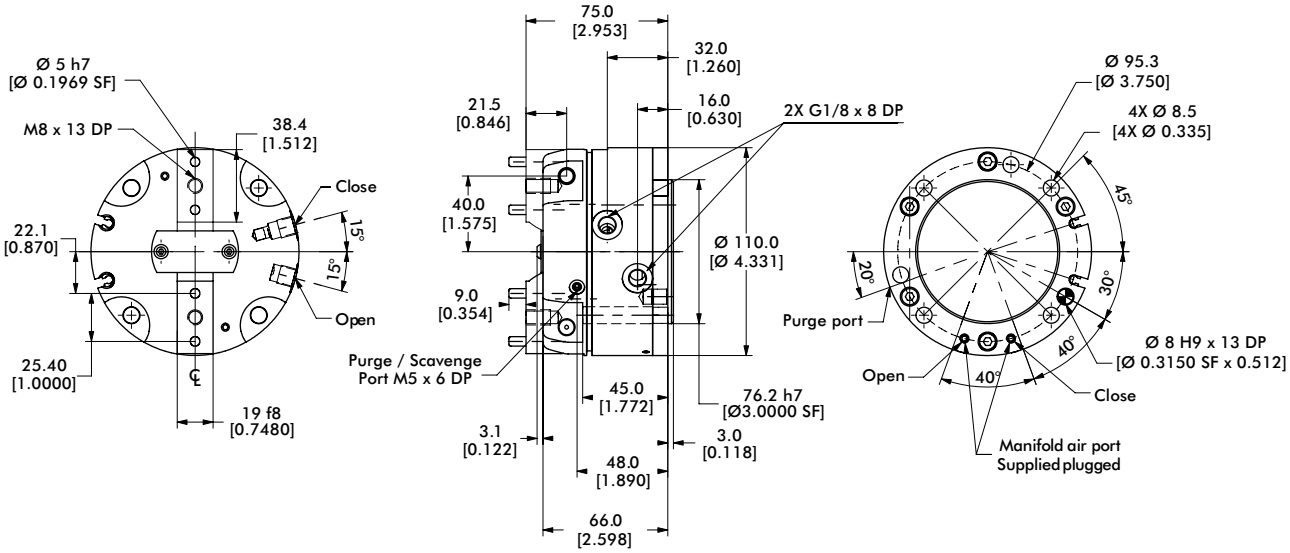

mm [INCH]

THIRD ANGLE PROJECTION

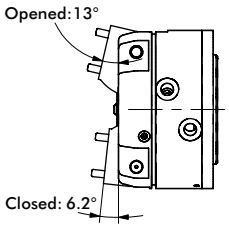

-KT: Inductive sensor

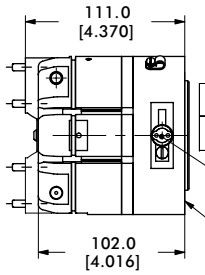

	Sensing range (From close position)	
	Yellow LED	Green LED
KT1	0° to 1.9°	17.2° to 19.1°
KT2	0° to 5.7°	13.4° to 19.1°

Protective Boots	Order #
PVC Sealed Boot Kit (2 interfaces, 1 collar, 1 boot)	SLKT-373

Seal Repair Kits	Order #
Seal Repair Kit Standard (Buna-N)	SLKT-158
Seal Repair Kit (Viton®)	SLKT-158V
Seal Repair Kit (Hydraulic)	SLKT-332

Loading Information

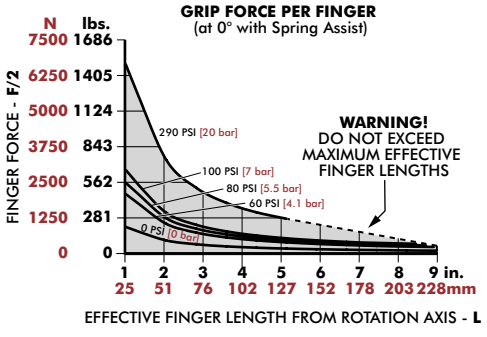

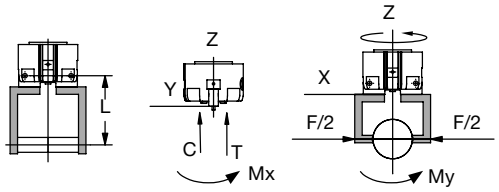

RUA-112M	Static
Maximum Tensile **T**	290 N [65 lbs]
Maximum Compressive **C**	290 N [65 lbs]
Maximum Moment M_x	19 Nm [168 in-lbs]
Maximum Moment M_y	121 Nm [1071 in-lbs]
Maximum Moment M_z	19 Nm [168 in-lbs]

†Capacities are per set of jaws and are not simultaneous

Dimensions and technical information are subject to change without notice

RUA-142M

Angular Grippers | Dimensions and Technical Specifications

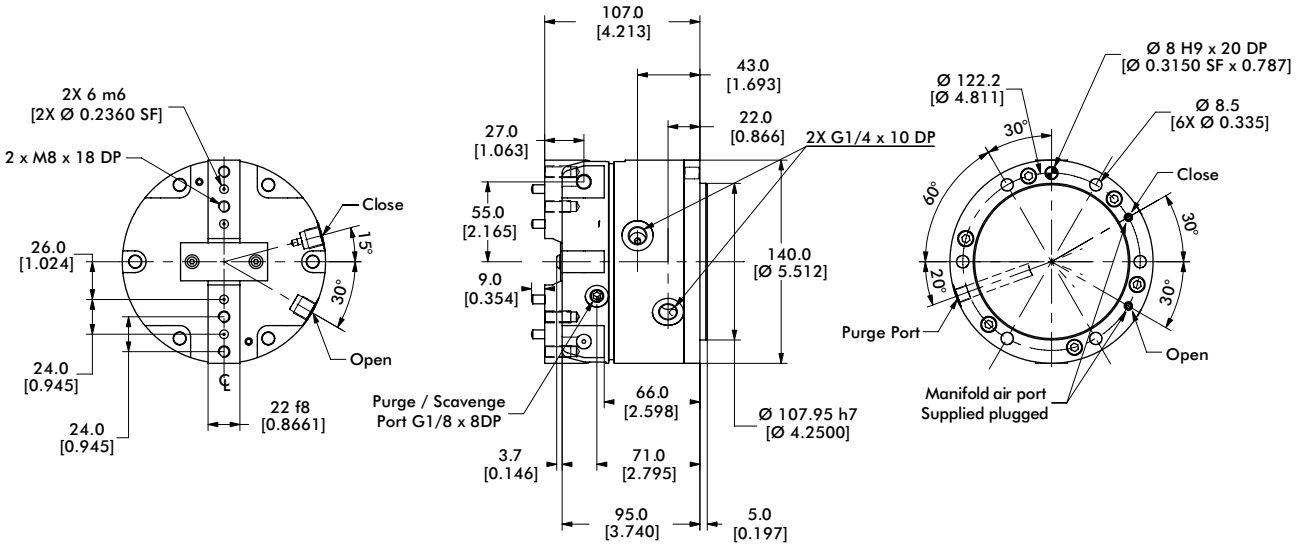

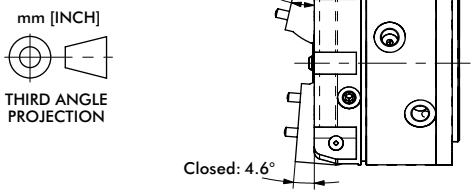

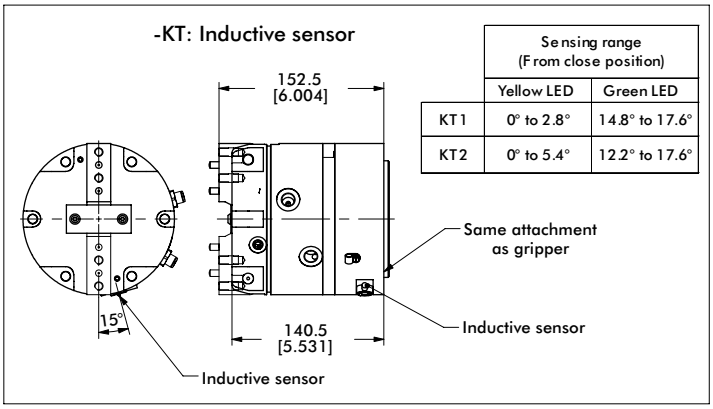

	Sensing range (From close position)	
	Yellow LED	Green LED
KT1	0° to 2.8°	14.8° to 17.6°
KT2	0° to 5.4°	12.2° to 17.6°

Protective Boots	Order #
PVC Sealed Boot Kit (2 interfaces, 1 collar, 1 boot)	SLKT-376

Seal Repair Kits	Order #
Seal Repair Kit Standard (Buna-N)	SLKT-333
Seal Repair Kit (Viton®)	SLKT-333V
Seal Repair Kit (Hydraulic)	SLKT-334

Loading Information

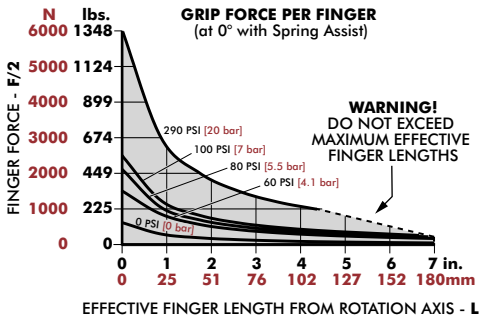

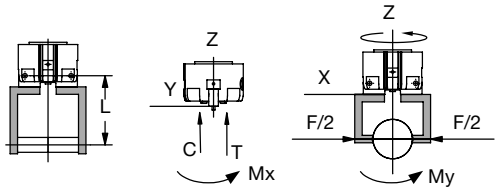

RUA-142M	Static
Maximum Tensile **T**	630 N [142 lbs]
Maximum Compressive **C**	630 N [142 lbs]
Maximum Moment M_x	52 Nm [460 in-lbs]
Maximum Moment M_y	696 Nm [6160 in-lbs]
Maximum Moment M_z	52 Nm [460 in-lbs]

†Capacities are per set of jaws and are not simultaneous

RUA-162M

Angular Grippers | Dimensions and Technical Specifications

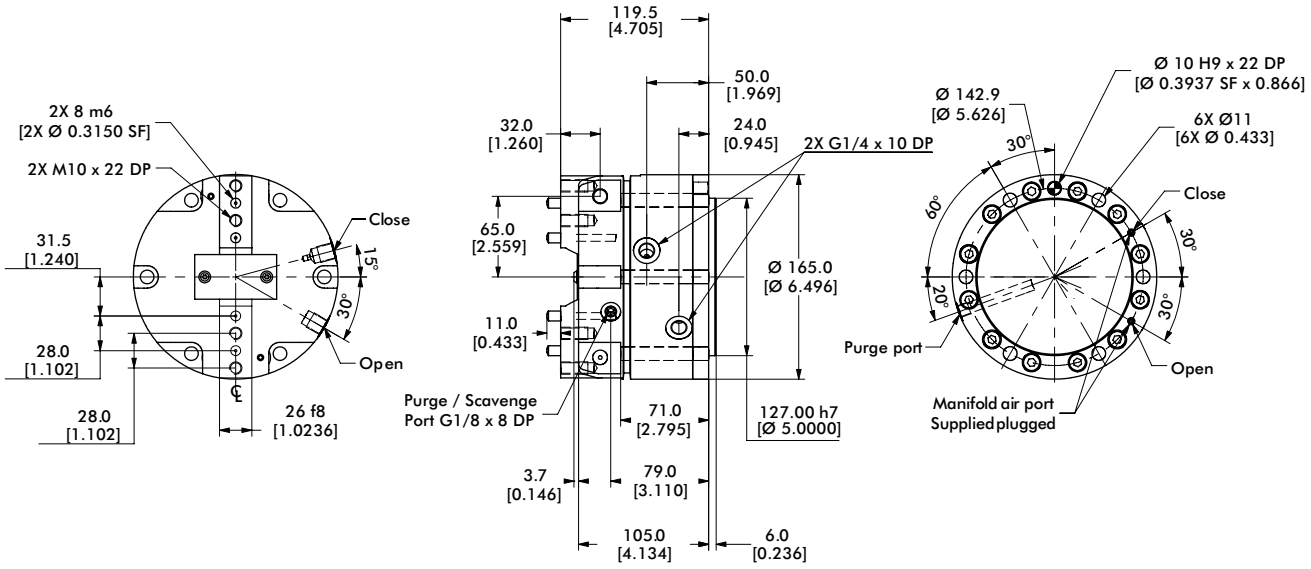

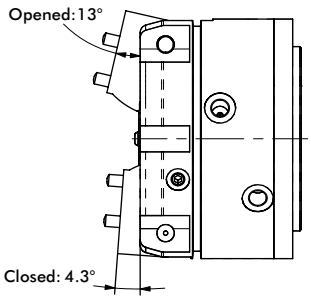

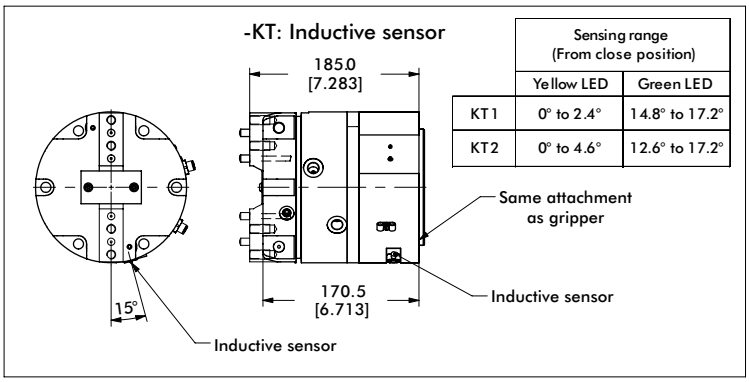

	Sensing range (From close position)	
	Yellow LED	Green LED
KT1	0° to 2.4°	14.8° to 17.2°
KT2	0° to 4.6°	12.6° to 17.2°

mm [INCH]

THIRD ANGLE PROJECTION

Protective Boots	Order #
PVC Sealed Boot Kit (2 interfaces, 1 collar, 1 boot)	SLKT-379

Seal Repair Kits	Order #
Seal Repair Kit Standard (Buna-N)	SLKT-335
Seal Repair Kit (Viton®)	SLKT-335V
Seal Repair Kit (Hydraulic)	SLKT-336

Loading Information

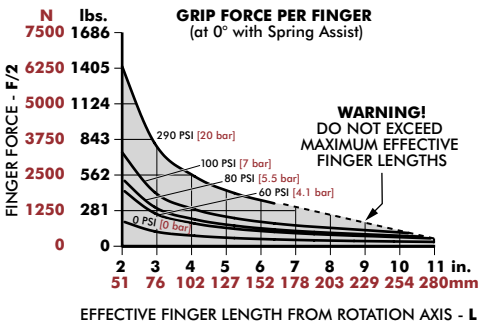

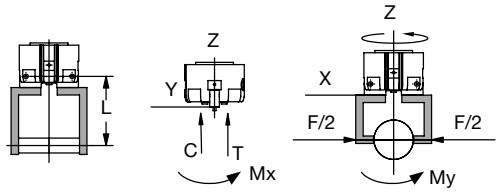

RUA-162M	Static
Maximum Tensile **T**	840 N [189 lbs]
Maximum Compressive **C**	840 N [189 lbs]
Maximum Moment M_x	75 Nm [664 in-lbs]
Maximum Moment M_y	1050 Nm [9293 in-lbs]
Maximum Moment M_z	75 Nm [664 in-lbs]

†Capacities are per set of jaws and are not simultaneous

Dimensions and technical information are subject to change without notice

Notes

FUA SERIES

Angular Food Grippers | Features and Benefits | How To Order

Features:

- Designed for direct product contact in the food zone, according to the food industry standard (EN 1672-2)
- All parts are corrosion resistant, non-toxic, non-contaminating, non-porous, non-absorbent and non-reactive
- Stainless steel design resists chemical cleaning procedures
- Electro-polished exterior with no recessed or inaccessible zones prevents retention of contaminants and simplifies cleaning
- Sealed motion components (IP69K design) for high-pressure and high-temperature daily cleanings
- Any metal/metal contact protected by gasket to obtain a leakproof assembly against bacteria
- Angular gripper design for easier radial sealing of jaws
- Optional safety springs for external gripping, in case of air supply failure, in single acting or spring assist mode
- No external fasteners to avoid any foreign matter in food
- Contains special lubricants suitable for food industry
- Long maintenance-free service life



Applications:

- Food zone and splash zone handling of product
- Non-food zone applications
- Other applications requiring a sealed and corrosion resistant gripper

How To Order

Base Model
FUA-50M
FUA-63M

____ - ____

Spring	Description
"Blank"	None
C	Spring Closed

Dimensions and technical information are subject to change without notice

FUA-50M

Angular Food Grippers | Dimensions and Technical Specifications

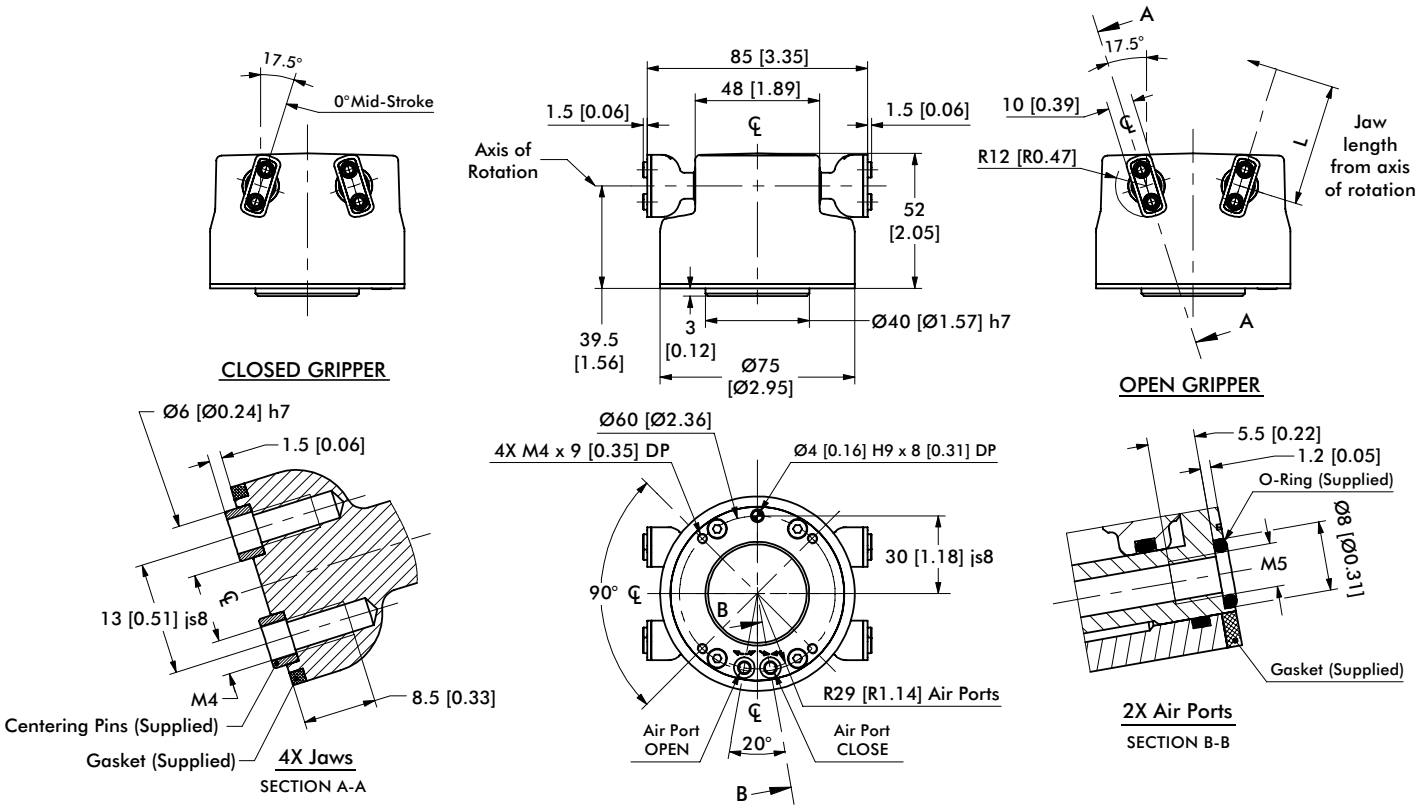

Specifications	Units	FUA-50M
Torque, Jaws @ 6 bar [87 psi]		
@ 35° w/o spring (closing)	Nm [in-lbs]	13 [115]
@ 35° w/spring (closing)	Nm [in-lbs]	16 [142]
@ 0° w/o spring (opening)	Nm [in-lbs]	14 [124]
Total Stroke		70°
Weight (Stainless Steel)	kg [lbs]	1,06 [2.34]
Pressure Range	bar [psi]	3-7 [44-100]
Ingress Protection Class (IP)		IP69K
Displacement	cm^3 [in^3]	30,2 [1.84]
Temperature Range	°C [°F]	-15°~80° [5°~175°]
Actuation (open/close)	sec	0.07 / 0.07

mm [INCH]

THIRD ANGLE PROJECTION

Seal Repair Kits	Order #
Flat Seals Repair Kit (Jaw and Body)	SLKT-424
Complete Seal Repair Kit (includes Flat Seals)	SLKT-425
Rear and Body Seal Repair Kit (Include Air Port O-Rings)	SLKT-428

Loading Information

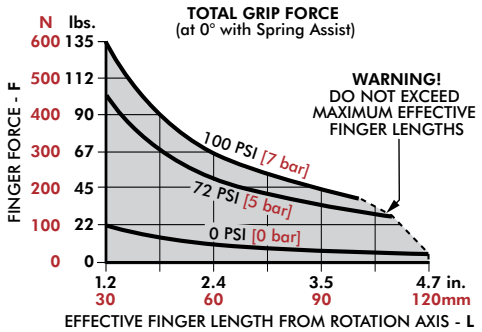

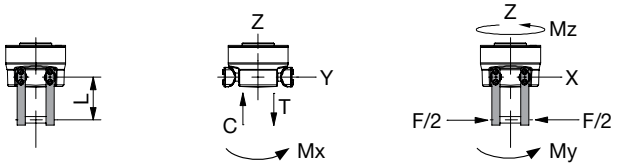

RUA-162M	Static	Dynamic
Maximum Tensile **T**	305 N [69 lbs]	61 N [14 lbs]
Maximum Compressive **C**	305 N [69 lbs]	61 N [14 lbs]
Maximum Moment M_x	21 Nm [186 in-lbs]	5,3 Nm [47 lbs]
Maximum Moment M_y	--	--
Maximum Moment M_z	21 Nm [186 in-lbs]	5,3 Nm [47 lbs]

†Capacities are per set of jaws and are not simultaneous

FUA-63M

Angular Food Grippers | Dimensions and Technical Specifications

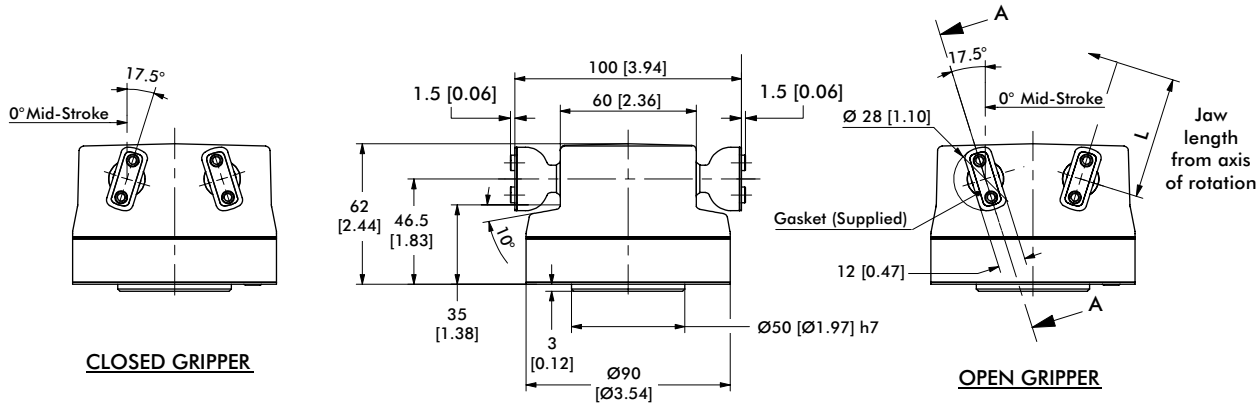

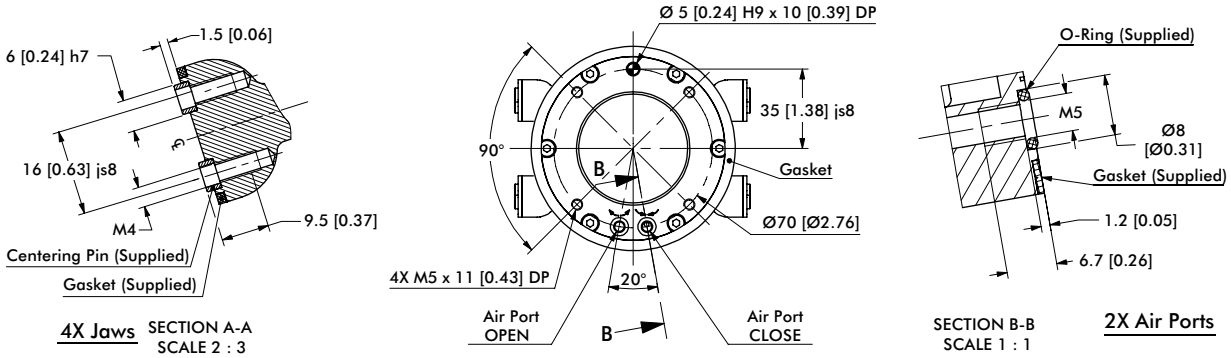

Specifications	Units	FUA-63M
Torque, Jaws @ 6 bar [87 psi]		
@ 35° w/o spring (closing)	Nm [in-lbs]	23 [204]
@ 35° w/spring (closing)	Nm [in-lbs]	29 [257]
@ 0° w/o spring (opening)	Nm [in-lbs]	25 [221]
Total Stroke		70°
Weight (Stainless Steel)	kg [lbs]	1.75 [8.27]
Pressure Range	bar [psi]	3-7 [44-100]
Ingress Protection Class (IP)		IP69K
Displacement	cm³ [in³]	53,8 [3.30]
Temperature Range	°C [°F]	-15°~80° [5°~175°]
Actuation (open/close)	sec	0.08 / 0.08

mm [INCH]

THIRD ANGLE PROJECTION

Seal Repair Kits	Order #
Flat Seals Repair Kit (Jaw and Body)	SLKT-426
Complete Seal Repair Kit (includes Flat Seals)	SLKT-427
Rear and Body Seal Repair Kit (Include Air Port O-Rings)	SLKT-429

Loading Information

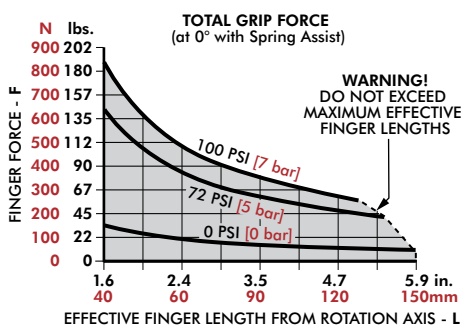

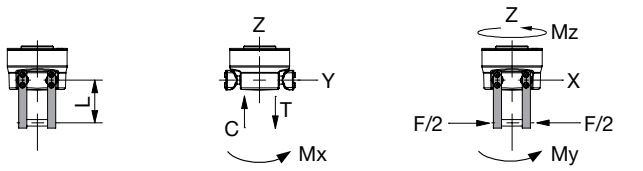

RUA-162M	Static	Dynamic
Maximum Tensile **T**	360 N [81 lbs]	72 N [16 lbs]
Maximum Compressive **C**	360 N [81 lbs]	72 N [16 lbs]
Maximum Moment M_x	33 Nm [292 in-lbs]	8,3 Nm [73 in-lbs]
Maximum Moment M_y	--	--
Maximum Moment M_z	33 Nm [292 in-lbs]	8,3 Nm [73 in-lbs]

†Capacities are per set of jaws and are not simultaneous

Notes

ROTARY ACTUATORS

Rotary Actuators | Application Examples

DESTACO's RR Series of heavy-duty rotary actuators are compact models that are designed for large capacity, high torque applications in tight spaces – such as industrial and foundry projects. These models feature preloaded bearings for high repeatability rotary actuation, zero backlash with precision slip fit dowel pins, and mount the payload directly to the flange without additional support.

Markets



Applications

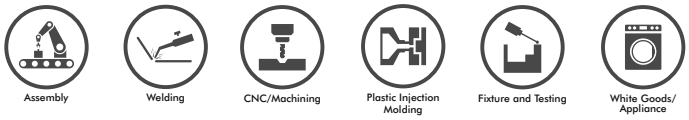



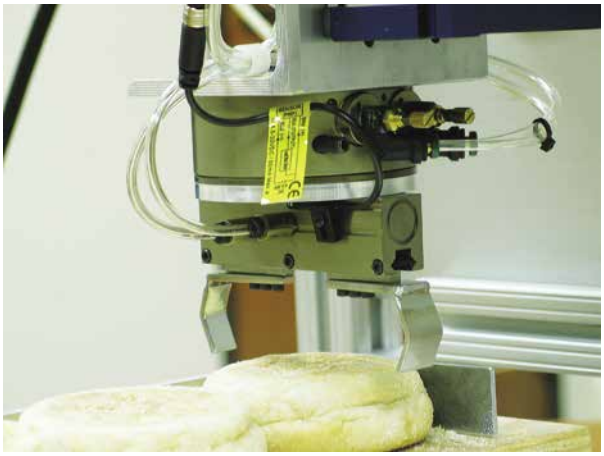





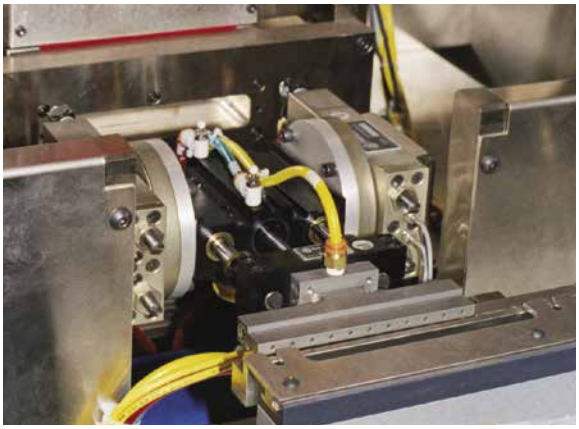

Dimensions and technical information are subject to change without notice

Model		Stroke Range	Payload Range	Operating Environment	Special Features	Page GR-ROT#
RR-18 & 28		0°-180°	0.45-1.3 [1-3]	IP66 with Purge and Seal option. Clean Room Class 100,000, ISO 8	Compact Size. Flange Payload Mount. Full Torque at End of Stroke.	3
RR-36 thru 66		0°-180°	3.6-34 [8-75]	IP55. Clean Room Class 100,000, ISO 9	Large Payload. Flange Payload Mount. Zero Backlash. Optional 4 port rotary manifold.	7

RR LIGHT-DUTY SERIES

Rotary Actuators | Features and Benefits | How To Order

Features:

- Ultra-thin profile for tight space applications
- Preloaded bearings for high repeatability rotary actuation
- Zero backlash and slip fit dowel pins for precision applications
- Built-in adjustable hard-stops
- Optional manifold eliminates twisted airlines
- **CR-** Clean room option or for use in harsh environment applications

Applications:

- Precision rotary positioning
- Medical applications
- OEM machines



(USB key shown for scale)

How To Order

Base Model	Size	Degrees of Rotation†	Flange Seal	Description
RR	18	45	"Blank"	None
	28	90	T	Sealed Flange
		135	CR	Sealed Flange, food grade grease and corrosion resistant hardware
		180		

Seals	Description
"Blank"	Buna-N
V	Viton® High Temperature

Metric	Description
"Blank"	Imperial
M	Metric

Manifold	Description
"Blank"	No Manifold
M	Single line rotary manifold

†Consult factory for intermediate degrees of rotation.

Accessories

Sensor Accessories	Model Numbers	Part Number	Qty/Unit
Sensor Mounting Kit (mounts 2 sensors)	All Models	OSMK-024	1
NPN Inductive Sensor with Quick Disconnect*	All Models	OISN-014	1-2
PNP Inductive Sensor with Quick Disconnect*	All Models	OISP-014	1-2
Quick Disconnect 2 Meter Cable Length*	All Models	CABL-010	1-2
Quick Disconnect 5 Meter Cable Length*	All Models	CABL-013	1-2

Pneumatic Accessories	Model Numbers	Part Number	Qty/Unit
M3 Plumbing Fitting Push-In for 3mm OD Tube	All Models	PLFT-021	2
M3 Plumbing Fitting Barb for 2mm ID Tube	All Models	PLFT-022	2
#10-32 Flow Control (Imperial)	All Models	VLVF-007	2
M5 Flow Control	All Models	VLVF-008	2

*Sensor and cable sold separately.

Specifications	Units	18	28
Maximum Payload	kg [lb]	0.45 [1.0]	1.36 [3.0]
Maximum Payload Inertia	Nm sec^2 [in-lbs sec^2]	0.000181 [0.0016]	0.001255 [0.0111]
Maximum Rotation		180°	
Maximum Torque Mid-Stroke @ 100psi/7 bar	Nm [lbs-in]	0.7 [6.5]	2.5 [22]
Maximum Torque End Stroke @ 100psi/7 bar			
Pitch Diameter of Pinion	mm [in]	8.46 [0.333]	12.7 [0.50]
Weight	kg [lb]	0.22 [0.48]	0.65 [1.44]
Pressure Range	bar [psi]	2-7 [30-100]	
Ingress Protection Class (IP)		IP66	
Displacement (180°)	cm^3 [in^3]	3.37 [0.205]	11.4 [0.69]
Temperature Range (Buna-N seals)	°C [°F]	-35°~80° [-30°~180°]	
Temperature Range (Viton® seals)	°C [°F]	-30°~150° [-20°~300°]	
Actuation Time (180° @ 100psi/7 bar)	sec	0.30	0.35
Actuation Time (90° @ 100psi/7 bar)	sec	0.25	0.30
End Stop Repeatability		±0.02°	
End Stop Adjustability		23°	
Over Travel (each end)		4°	8°
Valve required to actuate		4-way, 2-position	

RR-18

Rotary Actuators | Dimensions and Technical Specifications

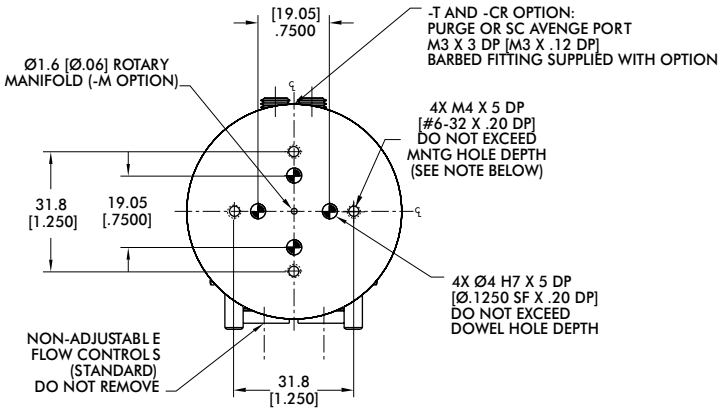

mm [INCH]

THIRD ANGLE
PROJECTION

UNIT SHOWN IN 0° POSITION ROTATED FULLY CW

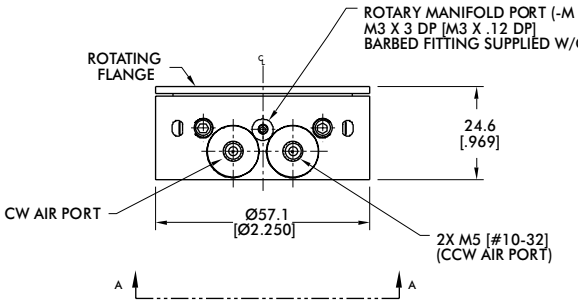

PLEASE NOTE: THE ON LY FEATURES THAT ARE NOT DIRECTLY RETROFITABLE TO THE RR-16 IS THE SHALLOWER TAP DOWEL DEPTH ON THE TURN TABLE AND THE DIFFERENT SENSORS AND SENSOR MOUNTING KIT.

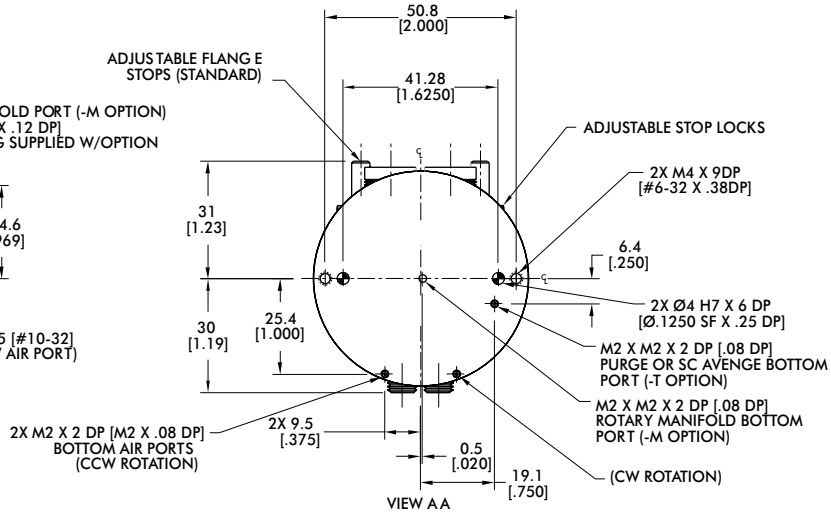

Seal Repair Kits	Order #
Buna-N Seal Repair Kit	SLKT-173
Viton® Seal Repair Kit	SLKT-173V
Viton® Bottom Air Port Manifold Seal Kit	SLKT-174V

Loading Information

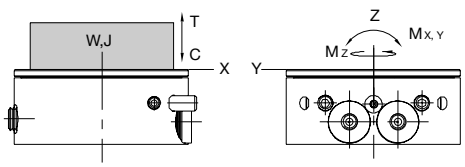

RR-18 Loading Information	Static
Maximum Tensile **T**	222 N [50 lbs]
Maximum Compressive **C**	1112 N [250 lbs]
Maximum Moment M_x	11 Nm [100 in-lbs]
Maximum Moment M_y	11 Nm [100 in-lbs]
Maximum Payload **W**	0.45 kg [1 lbs]
Maximum Inertia **J**	0.000181 N-m-sec^2 [0.0016 in-lbs-sec^2]

Note: Higher payloads and inertia possible with external shocks and stops.

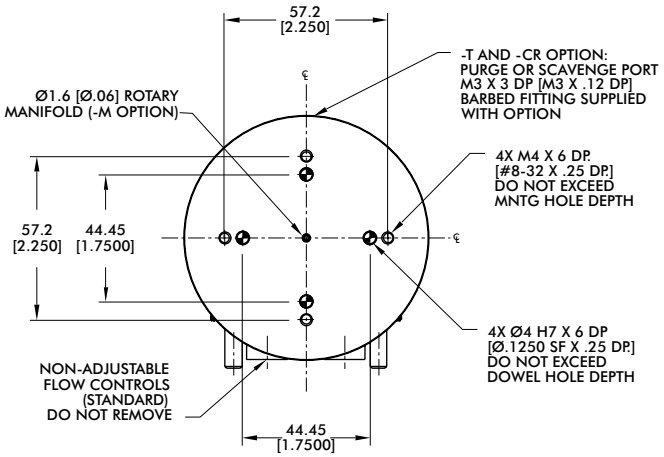

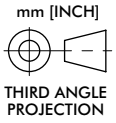

UNIT SHOWN IN 0° POSITION ROTATED FULLY CW

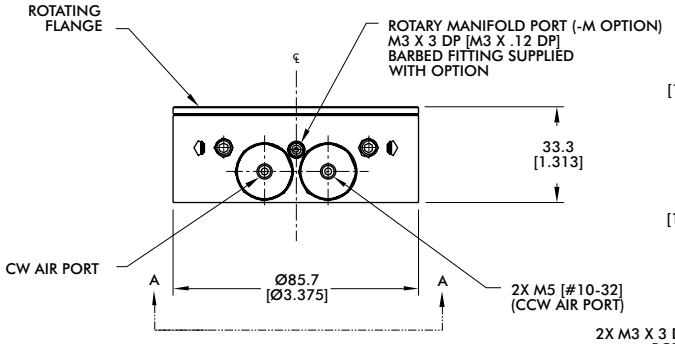

PLEASE NOTE: THE ONLY FEATURES THAT ARE NOT DIRECTLY RETROFITTABLE TO THE RR-26 IS THE DIFFERENT SENSORS & SENSOR MOUNTING KIT.

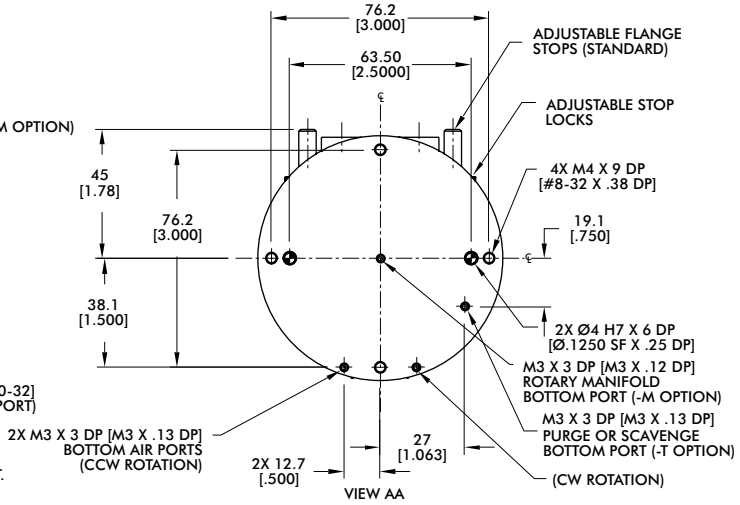

Seal Repair Kits	Order #
Buna-N Seal Repair Kit	SLKT-175
Viton® Seal Repair Kit	SLKT-175V
Viton® Bottom Air Port Manifold Seal Kit	SLKT-176V

Loading Information

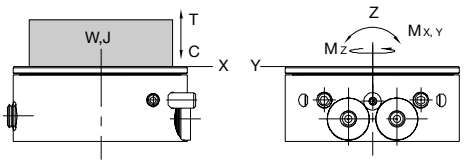

RR-28 Loading Information	Static
Maximum Tensile **T**	334 N [75 lbs]
Maximum Compressive **C**	2224 N [500 lbs]
Maximum Moment M_x	28 Nm [250 in-lbs]
Maximum Moment M_y	28 Nm [250 in-lbs]
Maximum Payload **W**	1.36 kg [3 lbs]
Maximum Inertia **J**	0.001255 N-m-sec^2 [0.0111 in-lbs-sec^2]

Note: Higher payloads and inertia possible with external shocks and stops.

RR MEDIUM-DUTY SERIES

Rotary Actuators | Features and Benefits | How To Order

Features:

- Low profile, high capacity for tight space applications
- Mount payload directly to flange without additional support
- Preloaded bearings for high repeatability rotary actuation
- Zero backlash and slip fit dowel pins for precision applications
- Built-in adjustable hard-stops and shock absorbers
- Adjustable flow controls
- Optional manifold eliminates twisted airlines
- 3 position rotary with option mid-stop



(USB key shown for scale)

Applications:

- Precision rotary positioning
- Part orientation
- Load and unload

How To Order

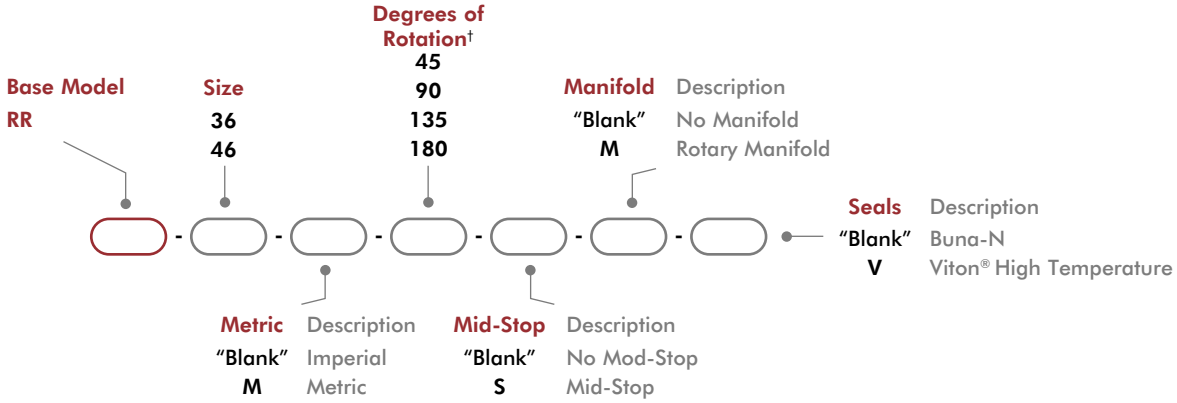

†Consult factory for intermediate degrees of rotation.

Accessories

Sensor Accessories	Model Numbers	Part Number	Qty/Unit
Sensor Mounting Kit (mounts 2 sensors)	All Models	OSMK-024	1
NPN Inductive Sensor with Quick Disconnect*	All Models	OISN-014	1-2
PNP Inductive Sensor with Quick Disconnect*	All Models	OISP-014	1-2
Quick Disconnect 2 Meter Cable Length*	All Models	CABL-010	1-2
Quick Disconnect 5 Meter Cable Length*	All Models	CABL-013	1-2

*Sensor and cable sold separately.

Specifications	Units	36	46
Maximum Payload	kg [lb]	3.6 [8.0]	6.8 [15]
Maximum Payload Inertia	Nm sec^2 [in-lbs sec^2]	0.00468 [0.0414]	0.01096 [0.0970]
Maximum Rotation		180°	
Maximum Torque Mid-Stroke @ 100psi/7 bar	Nm [lbs-in]	7.4 [65]	14 [122]
Maximum Torque End-Stroke @ 100psi/7 bar	Nm [lbs-in]	3.7 [32]	7 [61]
Weight (base unit)	kg [lb]	1.3 [2.9]	2.3 [5]
Weight Adder for Mid-Position Stop	kg [lb]	0.18 [0.4]	0.19 [0.42]
Weight Adder for Rotary Manifold	kg [lb]	0.04 [0.1]	0.17 [0.38]
Pressure Range	bar [psi]	3-7 [40-100]	
Ingress Protection Class (IP)		IP55	
Displacement (180°)	cm^3 [in^3]	33.6 [2.05]	63.18 [3.855]
Displacement of Mid-Position Stop	cm^3 [in^3]	19.66 [1.200]	35.95 [2.194]
Temperature Range (Buna-N seals)	°C [°F]	-0°~66° [32°~150°]	
Temperature Range (Viton® seals)			
Actuation Time (180° @ 100psi/7 bar)	sec	0.35	0.41
Actuation Time (90° @ 100psi/7 bar)	sec	0.2	0.36
End-Stop Repeatability		±0.02°	
Mid-Stop Repeatability		±0.5°	
End-Stop Adjustability		60°	
Over Travel (each end)		4°	
Valve required to actuate		4-way, 2-position	
Valve required to actuate Mid-Stop		3-way, 2-position	

RR-36

Rotary Actuators | Dimensions and Technical Specifications

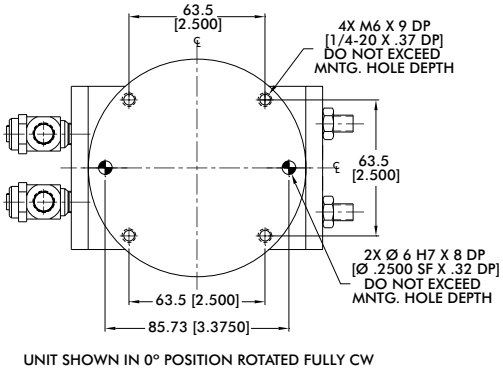

UNIT SHOWN IN 0° POSITION ROTATED FULLY CW

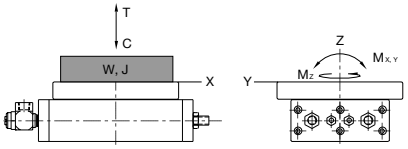

RR-36 Loading information	Static
Maximum Tensile **T**	2445 N [100 lbs]
Maximum Compressive **C**	2224 N [500 lbs]
Maximum Moment M_x	34 Nm [300 in-lbs]
Maximum Moment M_y	34 Nm [300 in-lbs]
Maximum Payload **W**	3.64 kg [8 lbs]
Maximum Inertia **J**	0.00468 N-m-sec^2 [0.0414 in-lbs-sec^2]

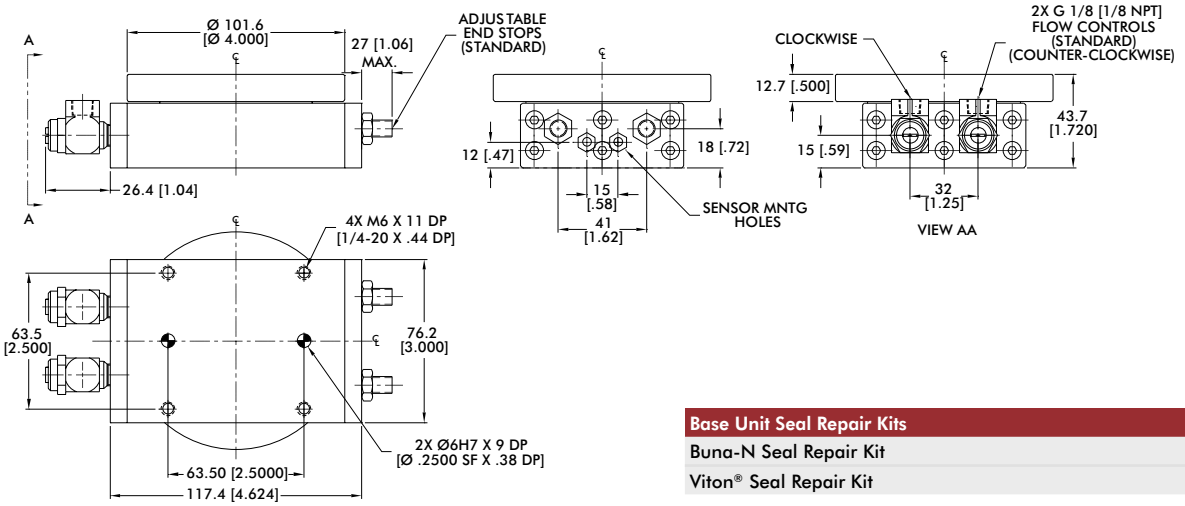

Base Unit Seal Repair Kits	Order #
Buna-N Seal Repair Kit	SLKT-016
Viton® Seal Repair Kit	SLKT-016V

Options Dimensions

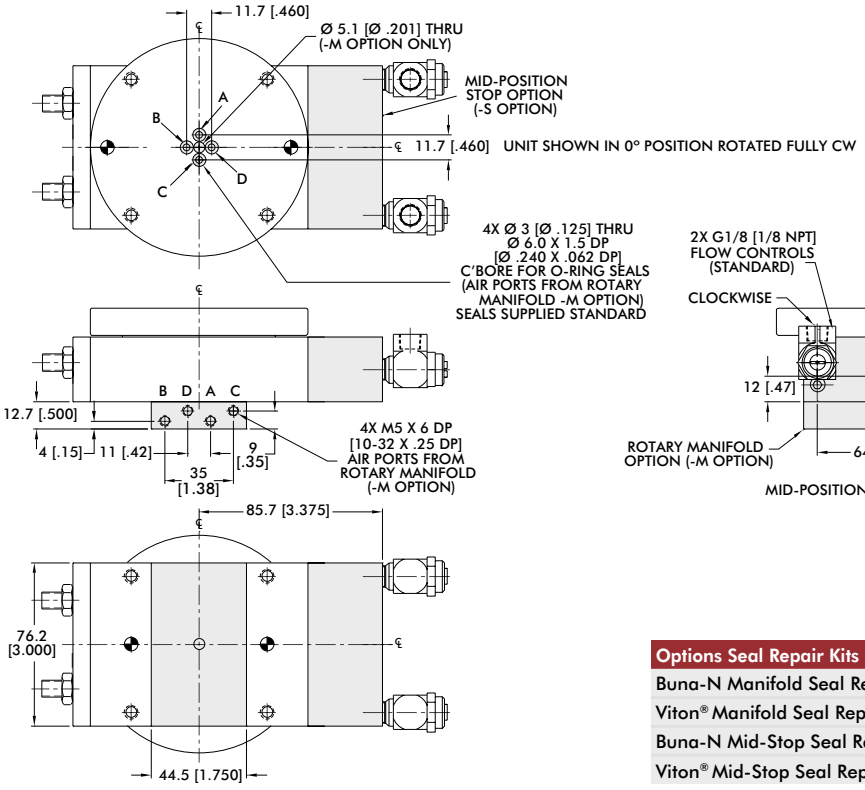

Options Seal Repair Kits		Order #
Buna-N Manifold Seal Repair Kit	-M	SLKT-061
Viton® Manifold Seal Repair Kit	-M-V	SLKT-061V
Buna-N Mid-Stop Seal Repair Kit	-S	SLKT-062
Viton® Mid-Stop Seal Repair Kit	-S-V	SLKT-062V

Rotary Actuators | Dimensions and Technical Specifications

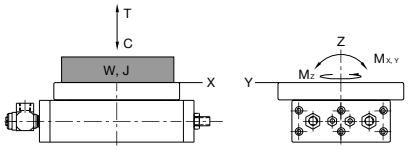

RR-46 Loading Information	Static
Maximum Tensile **T**	890 N [200 lbs]
Maximum Compressive **C**	4448 N [1000 lbs]
Maximum Moment M_x	57 Nm [500 in-lbs]
Maximum Moment M_y	57 Nm [500 in-lbs]
Maximum Payload **W**	6.8 kg [15 lbs]
Maximum Inertia **J**	0.01096 N-m-sec^2 [0.0970 in-lbs-sec^2]

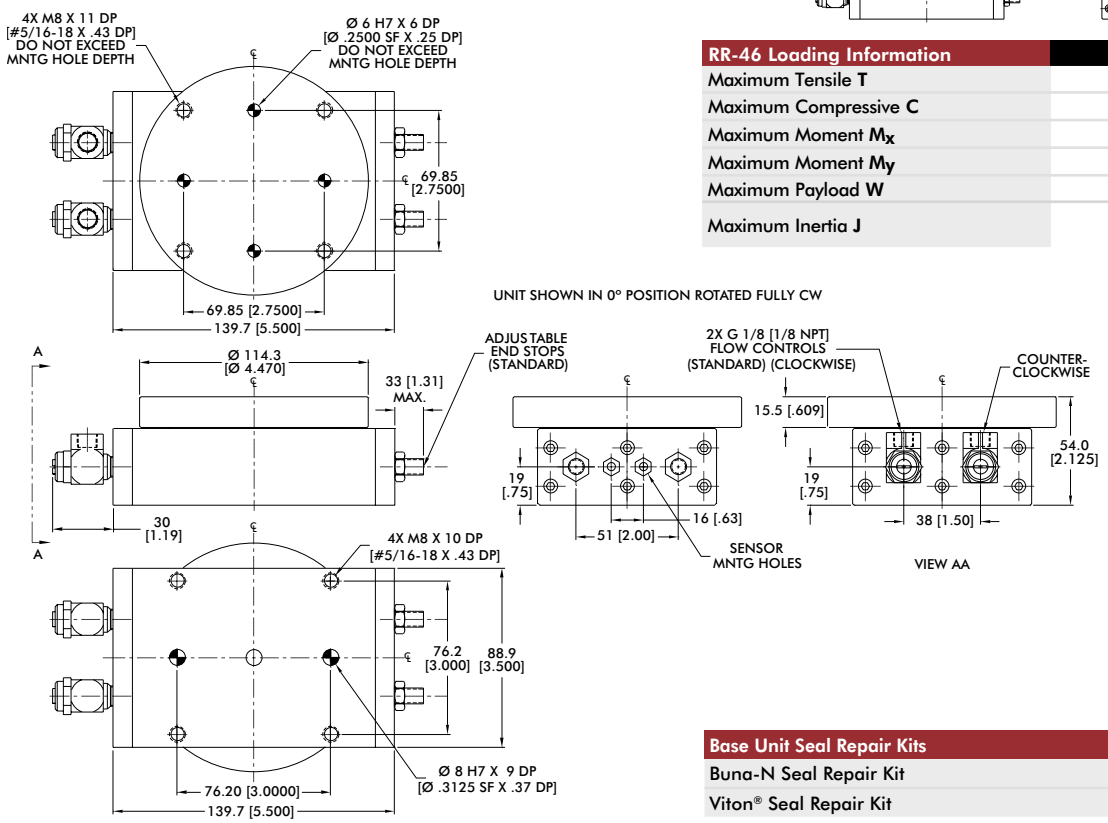

Base Unit Seal Repair Kits	Order #
Buna-N Seal Repair Kit	SLKT-017
Viton® Seal Repair Kit	SLKT-017V

Options Dimensions

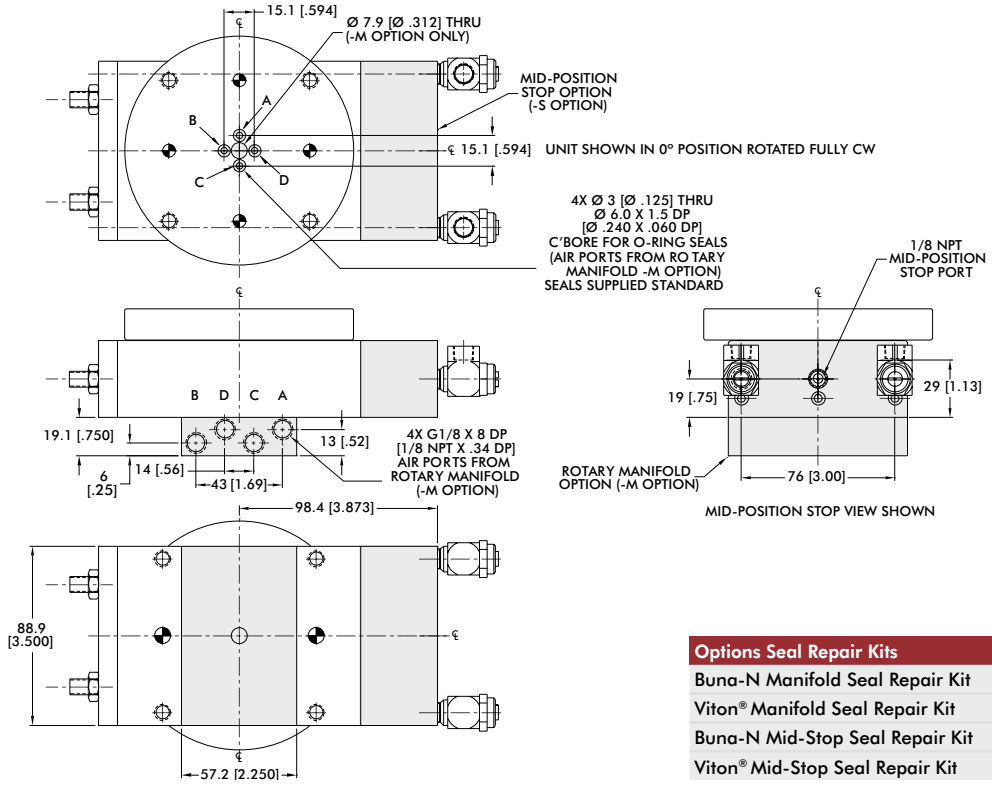

Options Seal Repair Kits		Order #
Buna-N Manifold Seal Repair Kit	-M	SLKT-067
Viton® Manifold Seal Repair Kit	-M-V	SLKT-067V
Buna-N Mid-Stop Seal Repair Kit	-S	SLKT-068
Viton® Mid-Stop Seal Repair Kit	-S-V	SLKT-068V

RR HEAVY-DUTY SERIES

Rotary Actuators | Features and Benefits | How To Order

Features:

- Compact large capacity, high torque for tight space applications
- Use in heavy duty industrial and foundry applications
- Mount payload directly to flange without additional support
- Preloaded bearings for high repeatability rotary actuation
- Zero backlash & precision slip fit dowel pins
- Adjustable flow controls
- Optional manifold eliminates twisted airlines
- 3 position rotary with option mid-stop

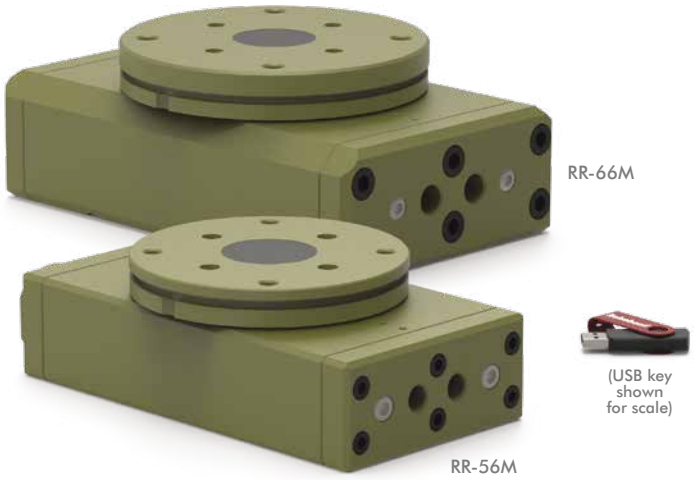

Applications:

- Large torque application
- Foundry applications
- Load and unload

How To Order

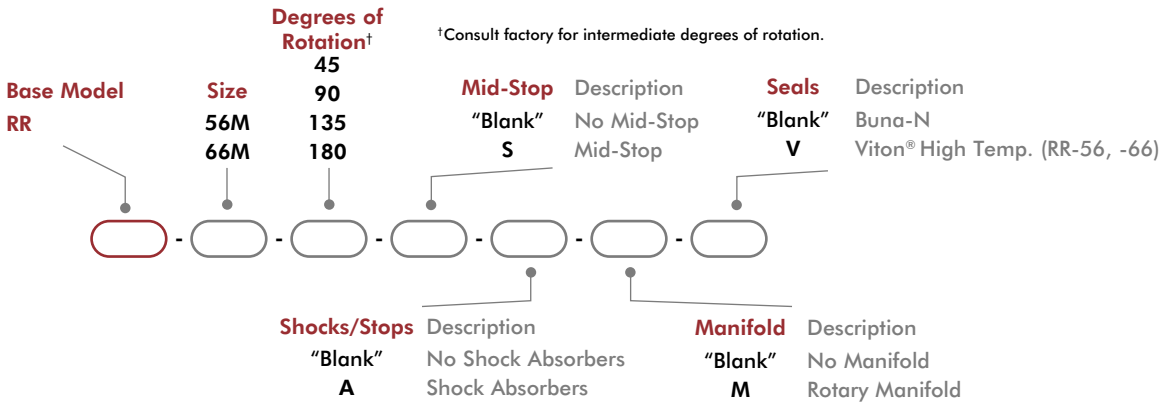

Accessories

Sensor Accessories	Model Numbers	Part Number	Qty/Unit
Inductive Sensor Mounting Kit (mounts 2 sensors)	-56, -66	OSMK-075	1
Magneto Resistive Sensor Mounting Kit (mounts 2 sensors)	-56, -66	OSMK-069	1
NPN Inductive Sensor with Quick Disconnect*	-56, -66	OISN-011	1-2
PNP Inductive Sensor with Quick Disconnect*	-56, -66	OISP-011	1-2
NPN Magneto Resistive Sensor with Quick Disconnect*	-56, -66	OHSN-017	1-2
PNP Magneto Resistive Sensor with Quick Disconnect*	-56, -66	OHSP-017	1-2
Quick Disconnect 2 Meter Cable Length*	-56, -66	CABL-010	1-2
Quick Disconnect 5 Meter Cable Length*	-56, -66	CABL-013	1-2

Pneumatic Accessories	Model Numbers	Part Number	Qty/Unit
G 1/4 BSPP Flow Controls	-56	VLVF-010	2
G 3/8 BSPP Flow Control	-66	VLVF-012	2

*Sensor and cable sold separately.

Specifications	Units	56	66
Maximum Payload†	kg [lb]	13.6 [30]	34 [75]
Maximum Payload Inertia†	Nm sec^2 [in-lbs sec^2]	0.02880 [0.2549]	0.11584 [1.0251]
Maximum Rotation		180°	
Maximum Torque Mid-Stroke @ 100psi/7 bar	Nm [lbs-in]	35 [311]	82 [728]
Maximum Torque End-Stroke @ 100psi/7 bar	Nm [lbs-in]	17 [155]	41 [364]
Weight (base unit)	kg [lb]	5.3 [11.6]	11.8 [26]
Weight Adder for Mid-Position Stop	kg [lb]	0.82 [1.8]	0.82 [1.8]
Weight Adder for Rotary Manifold	kg [lb]	0.54 [1.2]	0.36 [0.82]
Pressure Range	bar [psi]	3-7 [40-100]	
Ingress Protection Class (IP)		IP55	
Displacement	cm^3 [in^3]	160.1 [9.77]	375 [22.8]
Displacement of Mid-Position Stop	cm^3 [in^3]	90.16 [5.502]	60.32 [2.375]
Temperature Range (Buna-N seals)	°C [°F]	0°~66° [-32°~150°]	
Temperature Range (Viton® seals)			
Actuation Time (180° @ 100psi/7 bar)	sec	0.48	0.70
Actuation Time (90° @ 100psi/7 bar)	sec	0.40	0.50
End-Stop Repeatability		±0.02°	
Mid-Stop Repeatability		±0.5°	
End-Stop Adjustability*		30°	20°
Over Travel (each end)		4°	
Valve required to actuate		4-way, 2-position	
Valve required to actuate Mid-Stop		3-way, 2-position	

† Max. payload based on -A shock option.

*Any adjustment of the End Stop Adjustment Screw must be accompanied by an equal adjustment of the Shock Absorbers to prevent bottoming of the pistons against the Shock Absorbers.

RR-56

Rotary Actuators | Dimensions and Technical Specifications

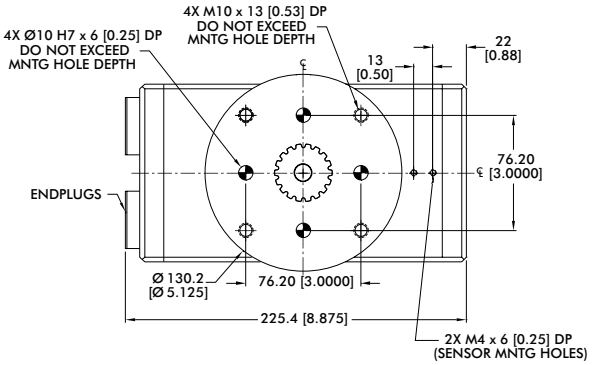

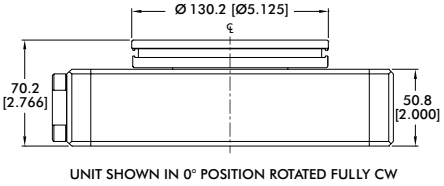

UNIT SHOWN IN 0° POSITION ROTATED FULLY CW

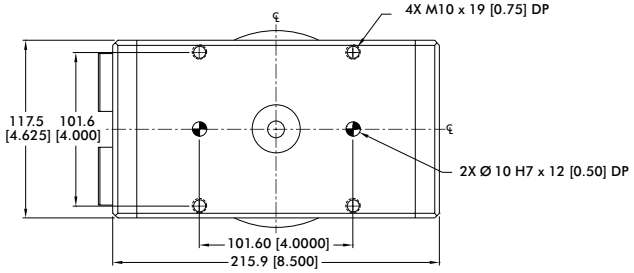

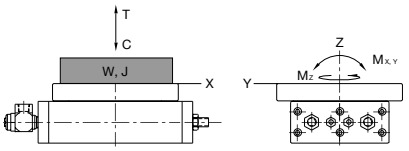

RR-56 Loading information	Static
Maximum Tensile **T**	3559 N [800 lbs]
Maximum Compressive **C**	8896 N [2000 lbs]
Maximum Moment M_x	113 Nm [1000 in-lbs]
Maximum Moment **My**	113 Nm [1000 in-lbs]
Maximum Payload **W**†	13.64 kg [30 lbs]
Maximum Inertia **J**†	0.0288 N-m-sec^2 [0.2549 in-lbs-sec^2]

†Max. payload based on -A shock option.

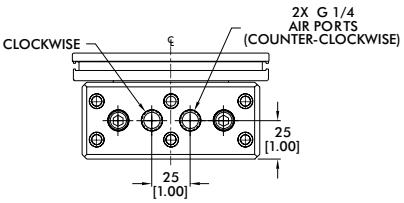

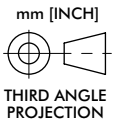

Base Unit Seal Repair Kits	Order #
Buna-N Seal Repair Kit	SLKT-124
Viton® Seal Repair Kit	SLKT-124V

Options Dimensions

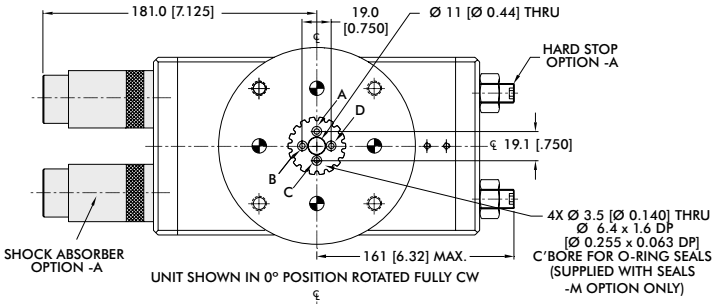

UNIT SHOWN IN 0° POSITION ROTATED FULLY CW

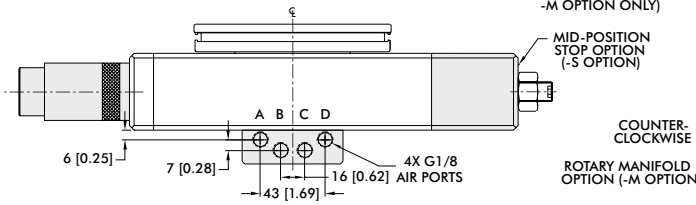

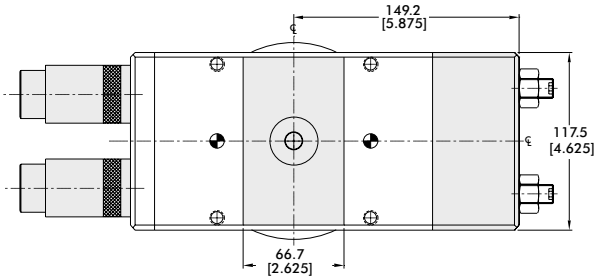

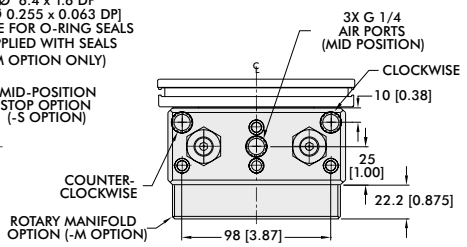

MID-POSITION STOP VIEW SHOWN

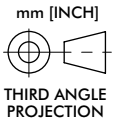

Options Seal Repair Kits		Order #
Buna-N Manifold Seal Repair Kit	-M	SLKT-126
Viton® Manifold Seal Repair Kit	-M-V	SLKT-126V
Buna-N Mid-Stop Seal Repair Kit	-S	SLKT-127
Viton® Mid-Stop Seal Repair Kit	-S-V	SLKT-127V
Buna-N Shock Seal Repair Kit	-A	SLKT-125
Viton® Shock Seal Repair Kit	-A-V	SLKT-125V

Rotary Actuators | Dimensions and Technical Specifications

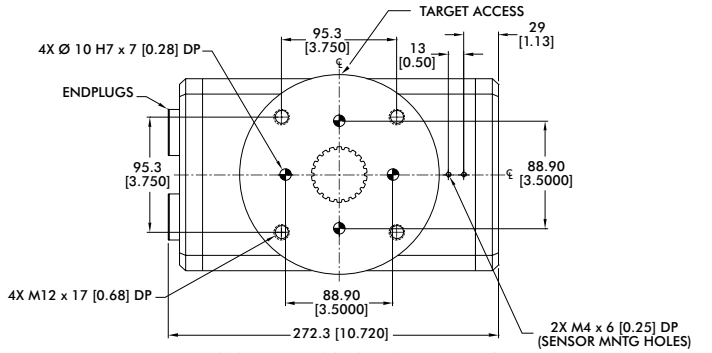

UNIT SHOWN IN 0° POSITION ROTATED FULLY CW

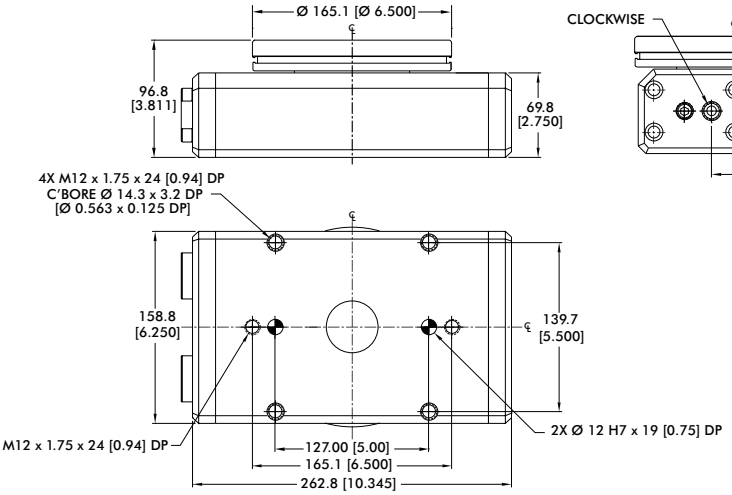

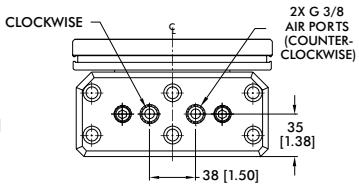

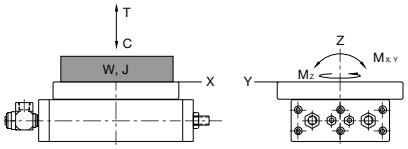

RR-66 Loading Information	Static
Maximum Tensile **T**	4448 N [1000 lbs]
Maximum Compressive **C**	15569 N [3500 lbs]
Maximum Moment M_x	226 Nm [2000 in-lbs]
Maximum Moment M_y	226 Nm [2000 in-lbs]
Maximum Payload **W**†	34 kg [75 lbs]
Maximum Inertia **J**†	0.1158 N-m-sec² [1.025 in-lbs-sec²]

†Max. payload based on -A shock option.

mm [INCH]

THIRD ANGLE PROJECTION

Base Unit Seal Repair Kits	Order #
Buna-N Seal Repair Kit	SLKT-128
Viton® Seal Repair Kit	SLKT-128V

Options Dimensions

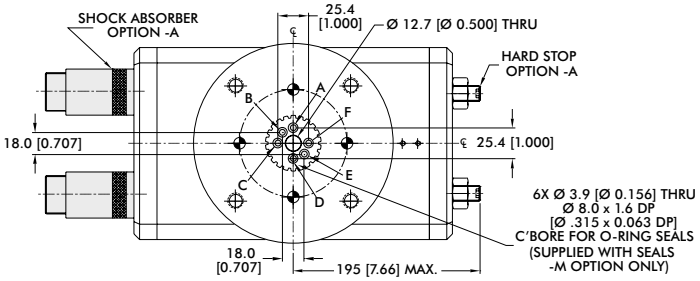

UNIT SHOWN IN 0° POSITION ROTATED FULLY CW

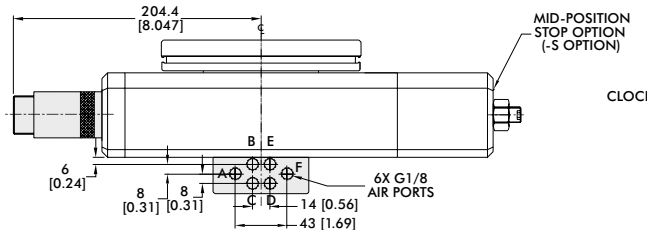

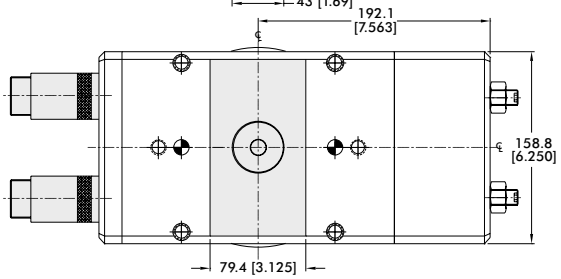

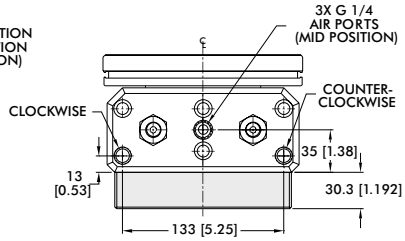

MID-POSITION STOP VIEW SHOWN

mm [INCH]

THIRD ANGLE PROJECTION

Options Seal Repair Kits		Order #
Buna-N Manifold Seal Repair Kit	-M	SLKT-130
Viton® Manifold Seal Repair Kit	-M-V	SLKT-130V
Buna-N Mid-Stop Seal Repair Kit	-S	SLKT-131
Viton® Mid-Stop Seal Repair Kit	-S-V	SLKT-131V
Buna-N Shock Seal Repair Kit	-A	SLKT-129
Viton® Shock Seal Repair Kit	-A-V	SLKT-129V

LINEAR SLIDES

Linear Slides | Product Overview | DIRECTCONNECT™ Mounting

Model		Stroke mm [in]	Thrust Force N [lbs]	Operating Environment	Special Features	Page GR-LIN-#
DLB		6-500 [0.25-26]	89-560 [20-126]	IP54	High Reliability with smooth operation base slide. Internal or external air cylinder options. DIRECTCONNECT	3
DLT		6-700 [0.25-28]	89-560 [20-126]	IP54	High Reliability with smooth operation Thrust slide. Internal or external air cylinder options. DIRECTCONNECT	19
DLM		5-100 [0.2-4]	67-230 [15-52]	IP54	Precise positioning with stroke adjustments. High load and moment capacity. DIRECTCONNECT	41
MPS		13-51 [0.5-2]	67-196 [15-44]	IP54	Compact slide with zero side play. Dual-V bearing design. Adjustable stops.	47

DIRECTCONNECT Modular Direct Mounting System without Adapter Plates

Products can be mounted in multiple positions. Refer to datasheet for complete info.

Slide to Slide

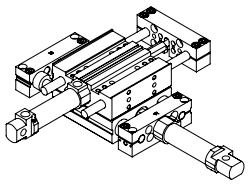

DLB Base Slide to DLT Thruster Slide

Slide to Slide

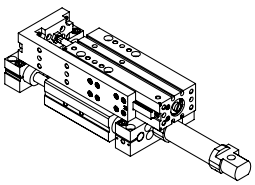

DLB Base Slide to DLM Thruster Slide

Slide to Gripper

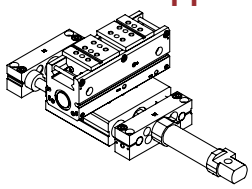

DLB Base Slide to DPG Parallel Gripper

Slide to Slide

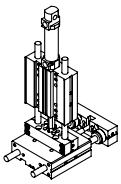

DLT Thruster Slide to DLT Thruster Slide

Slide to Slide

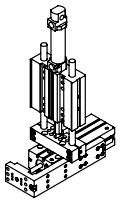

DLT Thruster Slide to DLM Thruster Slide

Slide to Gripper

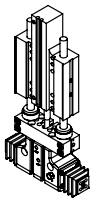

DLT Thruster Slide to DPDL Parallel Gripper

Slide to Slide

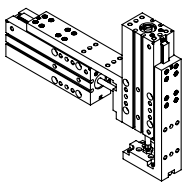

DLM Thruster Slide to DLM Thruster Slide

Slide to Slide

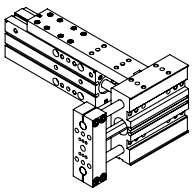

DLM Thruster Slide to DLT Thruster Slide

Slide to Gripper

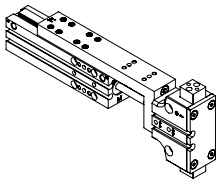

DLM Thruster Slide to DPDL Parallel Gripper

Dimensions and technical information are subject to change without notice

Linear Slides | DIRECTCONNECT™ Mounting Compatibility Chart

DESTACO's DIRECTCONNECT™ technology, allows all components of the system–grippers and slides—to be mounted together directly. Look for matching icons on product datasheets for mounting compatibility.

Note: The numbers in the cell represent the metric screw size and basic mounting pattern.
S=Square, R=Rectangle. ie; 5S = M5 Screw with square mounting pattern.

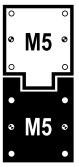

5S

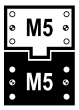

5R

Catalog Models		Base Slides			Thruster Slides				
		DLB-06&08	DLB-10,12,16	DLB-20&25	DLT-06&08	DLT-10,12,16	DLT-20&25	DLM-07	DLM-09&12
Base Slides	DLB-06,08				3R,3S			3R,3S	
	DLB-10,12,16				3S	5R,5S		3S	5R,5S
	DLB-20,25					5S	10R,10S		5S
Thruster Slides	DLT-06,08	3R,3S	3S		3R	3R		3R	3R
	DLT-10,12,16		5R,5S	5S		5R	5R		5R
	DLT-20,25			10R,10S			10R		
	DLM-07	3R,3S	3S		3R	3R		3R	3R
	DLM-9,12		5R,5S	5S		5R	5R		5R
Grippers	DGC		5R			5R	5R		5R
	DPG		5R			5R	5R		5R
	DCT-12, 16,25	3R			3R	3R		3R	3R
	DCT-25		5R			5R	5R		5R
	DPDL-047,056	3R			3R	3R		3R	3R
	DPDL-088,125		5R			5R	5R		5R
	DPDL-175,250			10R			10R		
	DPDS-047,056	3R			3R	3R		3R	3R
	DPDS-088,125		5R			5R	5R		5R
	DPDS-175,250			10R			10R		
	DPL-25xx		5R			5R	5R		5R
	DPL-32xx,40xx			10R			10R		
	DPP-10,14	3R			3R	3R		3R	3R
	DPP-20		5R			5R	5R		5R
	DPP-28		5R	10R		5R	10R		5R
	DPW-250	3R			3R	3R		3R	3R
	DPW-375,500		5R			5R	5R		5R
	G100-08,011	3R			3R	3R		3R	3R
	G100-18,25		5R			5R	5R		5R
	DPE-200		5R			5R	5R		5R
	DPE-400			10R			10R		

DLB SERIES - INTERNAL AIR CYLINDER

Internal Air Cylinder Linear Base Slides | Features and Benefits | How To Order

Features:

- Bearing system for smooth operation
- Rugged design produces very reliable long life operation
- Internal air cylinder for space-limited applications
- Telescopic airlines, shocks and hard stops available
- Viton® seals for high temp applications
- Corrosion resistant shafting for corrosive environments
- Inductive sensing for position detection
- Custom stroke lengths available.

Applications:

- Machining and automation applications
- Harsh environment pick-and-place applications
- OEM machines



How To Order

Base Model
DLB

Size
06M
08M
10M
12M
16M
20M
25M

Bearing Description
B Linear Ball Bearings†
C Composite Bushings
†Not available on -06 & -08

Seals Description
"Blank" Buna-N
V Viton® High Temperature

Shafting Description
"Blank" Precision Hardened
S Corrosion Resistant

Style Description
B Short Body
L Long Body

-B Style	Stroke* Metric (mm)
DLB-06M-B	**6, 12, 25, 30**
DLB-08M-B	**6, 12, 25, 40, 44**
DLB-10M-B	**25, 50**
DLB-12M-B	**25, 50**
DLB-16M-B	**25, 50, 80**
DLB-20M-B	**25, 50, 80, 100**
DLB-25M-B	**25, 50, 80, 100, 125**

*Custom strokes available. Consult factory.

-L Style	Stroke* Metric (mm)
DLB-06M-L	**12, 25, 40, 50, 65, 75**
DLB-08M-L	**12, 25, 40, 50, 65, 75, 85**
DLB-10M-L	**25, 50, 80, 100**
DLB-12M-L	**25, 50, 80, 100, 125**
DLB-16M-L	**25, 50, 80, 100, 125, 150**
DLB-20M-L	**25, 50, 80, 100, 125, 160**
DLB-25M-L	**25, 50, 80, 100, 125, 160, 175**

*Custom strokes available. Consult factory.

DLB SERIES - INTERNAL AIR CYLINDER

Internal Air Cylinder Linear Base Slides | Accessories and Technical Specifications

Shock/Stop Accessories	Model Numbers	Style	Part Number	Qty/Unit
Shock Absorber	06, 08	ALL	SHOK-030	1-2
	10		SHOK-028	
	12, 16,		SHOK-010	
	20, -25		SHOK-029	
Adjustable Hard Stop	06, 08		DLT-0623	
	10, 12, 16, 20, 25		DLT-1023	
Sensor Accessories	**Model Numbers**	**Style**	**Part Number**	**Qty/Unit**
PNP Inductive Sensor with Quick Disconnect*	All Models	ALL	OISP-011	1-2
NPN Inductive Sensor with Quick Disconnect*			OISN-011	
Quick Disconnect 2 Meter Cable Length*			CABL-010	
Quick Disconnect 5 Meter Cable Length*			CABL-013	
Pneumatic Accessories	**Model Numbers**	**Style**	**Part Number**	**Qty/Unit**
G1/8 Telescopic Airlines (up to 50mm)	10, 12, 16	B	OTAL-043	1-4
G1/8 Telescopic Airlines (up to 80mm)	10, 12, 16		OTAL-044	
G1/8 Telescopic Airlines (up to 100mm)	10, 12, 16	L	OTAL-051	
G1/8 Telescopic Airlines (up to 125mm)	10, 12, 16		OTAL-052	
G1/8 Telescopic Airlines (up to 160mm)	10, 12, 16, 20, 25	L	OTAL-045	
G1/8 Telescopic Airlines (up to 300mm)	20, 25		OTAL-046	
M5 Adjustable Flow Control	06, 08, 10, 12, 16	ALL	VLVF-008	1-2
G 1/8 Adjustable Flow Control	20, 25		VLVF-005	
Cylinder Seal Kit (Buna-N)	06, 08		SLKT-109	1
	10		SLKT-101	
	12, 16		SLKT-103	
	20, 25		SLKT-105	
Cylinder Seal Kit (Viton®)	06, 08		SLKT-109V	
	10		SLKT-101V	
	12, 16		SLKT-103V	
	20, 25		SLKT-105V	

*Sensor and cable sold separately.

See page GR-LIN-35 for Accessory Mounting Technical Data.

Specifications

Specifications	Units	06	08	10	12
Max. Air Pressure	bar [psi]	7 [100]			
Thrust Force @ 5.5 bar [80psi]	N [lbs]	89 [20]		129 [29]	254 [57]
Weight (basic unit) **-B**	kg [lb]	0.20 [0.44]	0.36 [0.79]	0.93 [2.08]	1.7 [3.83]
Weight (basic unit) **-L**	kg [lb]	0.32 [0.71]	0.56 [1.24]	1.50 [3.34]	2.30 [5.13]
Additional Weight per Stroke **-B**	g/mm [lbs/in]	0.53 [0.03]	0.88 [0.05]	1.4 [0.08]	2.1 [0.12]
Cylinder Bore Ø	mm [in]	14.29 [0.563]		19 [0.75]	25 [1.00]
Shaft Ø	mm [in]	6 [0.236]	8 [0.315]	9.5 [0.375]	12 [0.472]

Specifications	Units	16	20	25
Max. Air Pressure	bar [psi]	7 [100]		
Thrust Force @ 5.5 bar [80psi]	N [lbs]	254 [57]	560 [126]	560 [126]
Weight (basic unit) **-B**	kg [lb]	2.4 [5.19]	5.9 [13.0]	8.2 [18.2]
Weight (basic unit) **-L**	kg [lb]	3.30 [7.30]	7.1 [15.6]	9.7 [21.4]
Additional Weight per Stroke **-B**	g/mm [lbs/in]	3.3 [0.19]	5.54 [0.32]	8.4 [0.47]
Cylinder Bore Ø	mm [in]	25 [1.00]	38 [1.5]	38 [1.5]
Shaft Ø	mm [in]	16 [0.630]	20 [0.787]	25 [0.984]

DLB-06/08M-B

Internal Air Cylinder Linear Base Slides | Dimensions and Technical Specifications

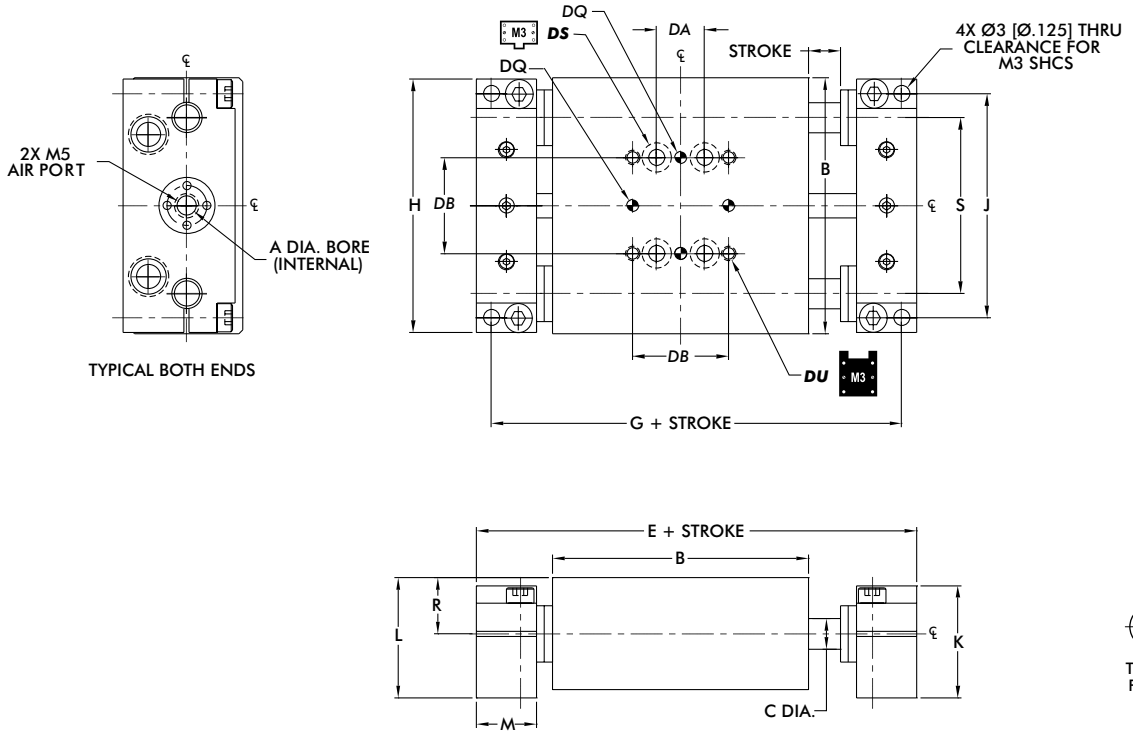

DIRECTCONNECT™ Mounting Pattern Dimensions (all sizes)				
DA	**DB**	**DQ**	**DS**	**DU**
9.5 [0.375]	19.1 [0.750]	3H7 x 2 DP	CLR & C'BORE FOR M3	M3 x 6 DP

Model	Bore Ø	Body Size	Shaft Ø	Basic Unit Dimensions								
	A	**B**	**C**	**E**	**G**	**H**	**J**	**K**	**L**	**M**	**R**	**S**
DLB-06M	14 [0.563]	50.8 [2.000]	6.0 [0.236]	81.0 [3.19]	75.1 [2.956]	50.3 [1.980]	44.4 [1.750]	22.2 [0.875]	23.7 [0.936]	11.9 [0.470]	11.13 [0.438]	34.93 [1.375]
DLB-08M		63.5 [2.500]	8.0 [0.315]	93.7 [3.69]	87.8 [3.456]	62.7 [2.470]	57.1 [2.250]					44.45 [1.750]

Dimensions in mm [in]

Loading Information

F=Externally applied force
W=Weight of payload
F+W=Total force
M=Maximum moment

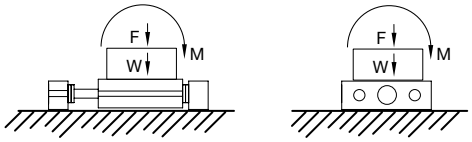

	06	08
Maximum Payload **(W)** horizontal motion using Shock Absorbers	1.4 kg [3 lbs]	2.3 kg [5 lbs]
Maximum Payload **(W)** vertical motion using Shock Absorbers	0.7 kg [1.5 lbs]	1.1 kg [2.5 lbs]
Maximum Payload **(W)** horizontal motion using Urethane Bumpers	0.5 kg [1 lbs]	0.5 kg [1 lbs]
Maximum Total Applied Load + Payload **(F+W)**	45 N [10 lbs]	53.4 N [12 lbs]
Total Maximum Moment about any Axis **(M)**	1.7 Nm [15 in-lbs]	3.4 Nm [30 in-lbs]

Shock Absorbers and Flow Controls are recommended for all applications

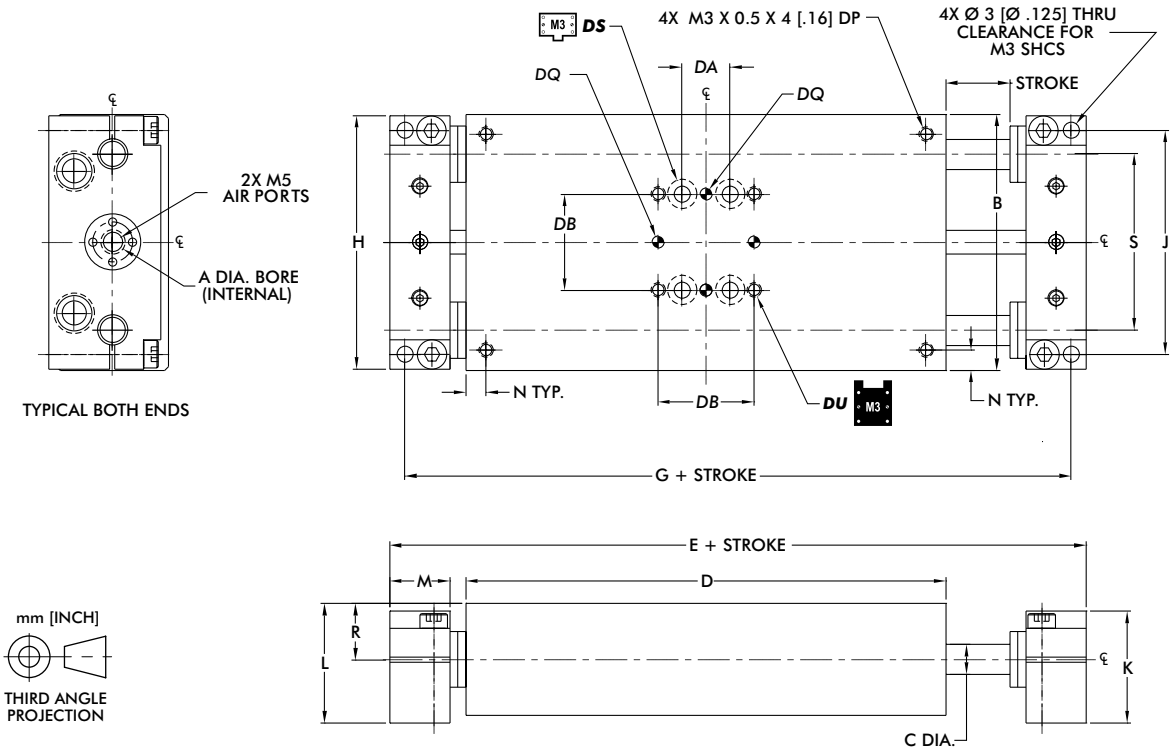

DIRECTCONNECT™ Mounting Pattern Dimensions (all sizes)				
DA	**DB**	**DQ**	**DS**	**DU**
9.5 [0.375]	19.1 [0.750]	3H7 x 2 DP	CLR & C'BORE FOR M3	M3 x 6 DP

Model	Bore Ø	Body Size	Shaft Ø	Basic Unit Dimensions										
	A	B	C	D	E	G	H	J	K	L	M	N	R	S
DLB-06M	14 [0.563]	50.8 [2.00]	6.0 [0.236]	95.2 [3.75]	125.5 [4.94]	119.6 [4.71]	50.3 [1.980]	44.4 [1.750]	22.2 [0.875]	23.7 [0.936]	11.9 [0.470]	3.96 [0.156]	11.13 [0.438]	34.93 [1.375]
DLB-08M		63.5 [2.50]	8.0 [0.315]	107.9 [4.25]	138.2 [5.44]	132.2 [5.206]	62.7 [2.470]	57.1 [2.250]						44.45 [1.750]

Dimensions in mm [in]

Loading Information

F=Externally applied force
W=Weight of payload
F+W=Total force
M=Maximum moment

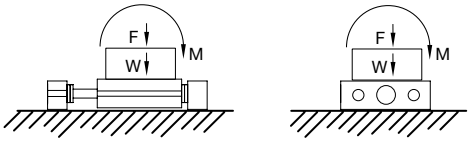

	06	08
Maximum Payload **(W)** horizontal motion using Shock Absorbers	1.4 kg [3 lbs]	2.3 kg [5 lbs]
Maximum Payload **(W)** vertical motion using Shock Absorbers	0.7 kg [1.5 lbs]	1.1 kg [2.5 lbs]
Maximum Payload **(W)** horizontal motion using Urethane Bumpers	0.5 kg [1 lbs]	0.5 kg [1 lbs]
Maximum Total Applied Load + Payload **(F+W)**	45 N [10 lbs]	53.4 N [12 lbs]
Total Maximum Moment about any Axis **(M)**	1.7 Nm [15 in-lbs]	3.4 Nm [30 in-lbs]

Shock Absorbers and Flow Controls are recommended for all applications

DLB-10/12/16M-B

Internal Air Cylinder Linear Base Slides | Dimensions and Technical Specifications

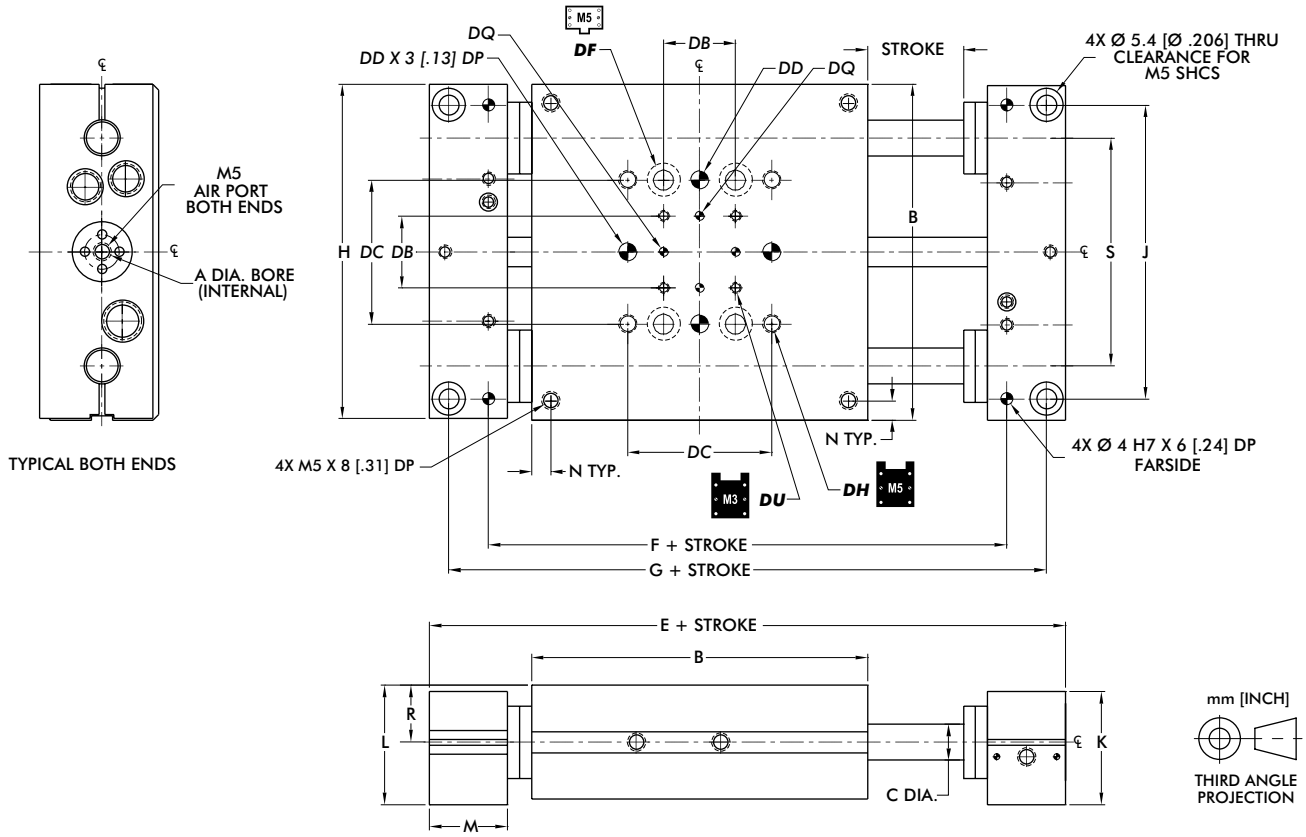

DIRECTCONNECT™ Mounting Pattern Dimensions (all sizes)						
DB	**DC**	**DD**	**DF**	**DH**	**DQ**	**DU**
19.1 [0.750]	38.1 [1.500]	5mm H7 x 6 DP	CLEARANCE FOR M5	M5 x 8.5DP	3H7 x 2 DP	M3 x 6 DP

Model	Bore Ø	Body Size	Shaft Ø	Basic Unit Dimensions										
	A	**B**	**C**	**E**	**F**	**G**	**H**	**J**	**K**	**L**	**M**	**N**	**R**	**S**
DLB-10M	19 [0.75]	88.9 [3.50]	9.5 [0.375]	143.0 [5.63]	111.70 [4.3975]	132.8 [5.228]	88.5 [3.485]	77.72 [3.0600]	29.9 [1.178]	31.6 [1.245]		N/A	15.09 [0.594]	60.33 [2.375]
DLB-12M	25 [1.00]	101.6 [4.00]	12 [0.472]	155.7 [6.13]	124.40 [4.8975]	145.5 [5.728]	101.2 [3.985]	88.90 [3.5000]	41.0 [1.615]	42.1 [1.657]	20.7 [0.813]	9.5 [0.375]	20.65 [0.813]	69.85 [2.750]
DLB-16M		120.7 [4.75]	16 [0.630]	174.8 [6.88]	143.45 [5.6475]	164.5 [6.478]	120.3 [4.735]	107.95 [4.2500]						

Dimensions in mm [in]

Loading Information

F=Externally applied force
W=Weight of payload
F+W=Total force
M=Maximum moment

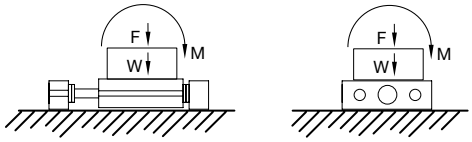

	10	12	16
Maximum Payload **(W)** horizontal motion using Shock Absorbers	6.8 kg [15 lbs]	13.6 kg [30 lbs]	20.4 kg [45 lbs]
Maximum Payload **(W)** vertical motion using Shock Absorbers	3.1 kg [7 lbs]	6.8 kg [15 lbs]	9.9 kg [22 lbs]
Maximum Payload **(W)** horizontal motion using Urethane Bumpers	2.2 kg [5 lbs]	4.5 kg [10 lbs]	6.8 kg [15 lbs]
Maximum Total Applied Load + Payload **(F+W)**	111 N [25 lbs]	178 N [40 lbs]	311 N [70 lbs]
Total Maximum Moment about any Axis **(M)**	8.4 Nm [75 in-lbs]	16.9 Nm [150 in-lbs]	33.9 Nm [300 in-lbs]

Shock Absorbers and Flow Controls are recommended for all applications

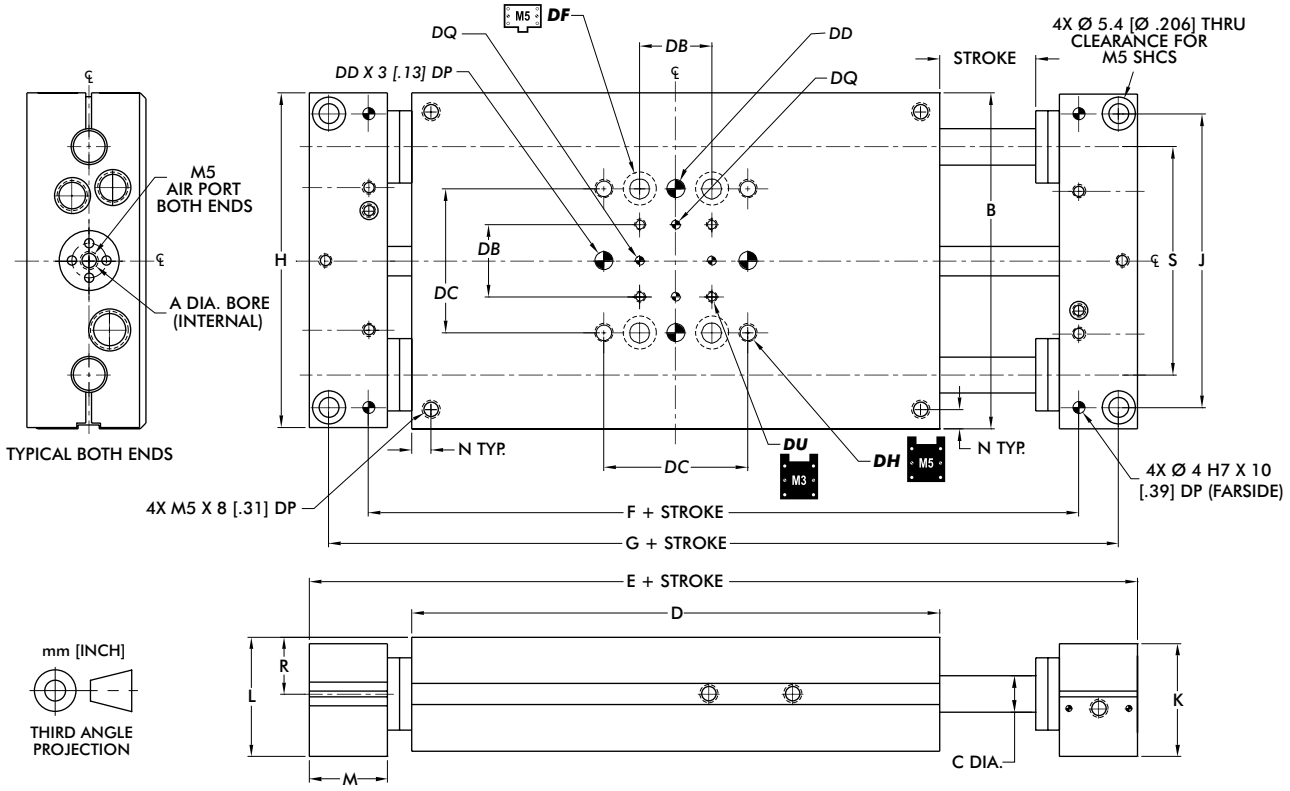

DIRECTCONNECT™ Mounting Pattern Dimensions (all sizes)						
DB	DC	DD	DF	DH	DQ	DU
19.1 [0.750]	38.1 [1.500]	5mm H7 x 6 DP	CLEARANCE FOR M5	M5 x 8.5DP	3H7 x 2 DP	M3 x 6 DP

Model	Bore Ø	Body Size	Shaft Ø	Basic Unit Dimensions											
	A	B	C	D	E	F	G	H	J	K	L	M	N	R	S
DLB-10M	19 [0.75]	88.9 [3.50]	9.5 [0.375]	139.7 [5.50]	193.8 [7.63]	162.50 [6.3975]	183.6 [7.228]	88.5 [3.485]	77.72 [3.0600]	29.9 [1.178]	31.6 [1.245]	20.7 [0.813]	N/A	15.09 [0.594]	60.33 [2.375]
DLB-12M	25 [1.00]	101.6 [4.00]	12 [0.472]	165.1 [6.50]	219.2 [8.63]	187.90 [7.3975]	209.0 [8.228]	101.2 [3.985]	88.90 [3.5000]	41.0 [1.615]	42.1 [1.657]		9.5 [0.375]	20.65 [0.813]	69.85 [2.750]
DLB-16M		120.7 [4.75]	16 [0.630]	190.5 [7.50]	244.6 [9.63]	213.30 [8.3975]	234.4 [9.228]	120.3 [4.735]	107.95 [4.2500]						82.55 [3.250]

Dimensions in mm [in]

Loading Information

F=Externally applied force
W=Weight of payload
F+W=Total force
M=Maximum moment

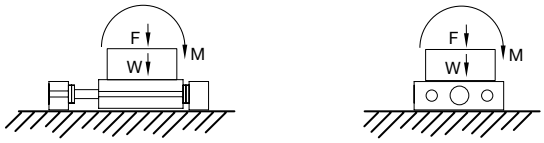

	10	12	16
Maximum Payload **(W)** horizontal motion using Shock Absorbers	6.8 kg [15 lbs]	13.6 kg [30 lbs]	20.4 kg [45 lbs]
Maximum Payload **(W)** vertical motion using Shock Absorbers	3.1 kg [7 lbs]	6.8 kg [15 lbs]	9.9 kg [22 lbs]
Maximum Payload **(W)** horizontal motion using Urethane Bumpers	2.2 kg [5 lbs]	4.5 kg [10 lbs]	6.8 kg [15 lbs]
Maximum Total Applied Load + Payload **(F+W)**	111 N [25 lbs]	178 N [40 lbs]	311 N [70 lbs]
Total Maximum Moment about any Axis **(M)**	8.4 Nm [75 in-lbs]	16.9 Nm [150 in-lbs]	33.9 Nm [300 in-lbs]

Shock Absorbers and Flow Controls are recommended for all applications

DLB-20/25M-B

Internal Air Cylinder Linear Base Slides | Dimensions and Technical Specifications

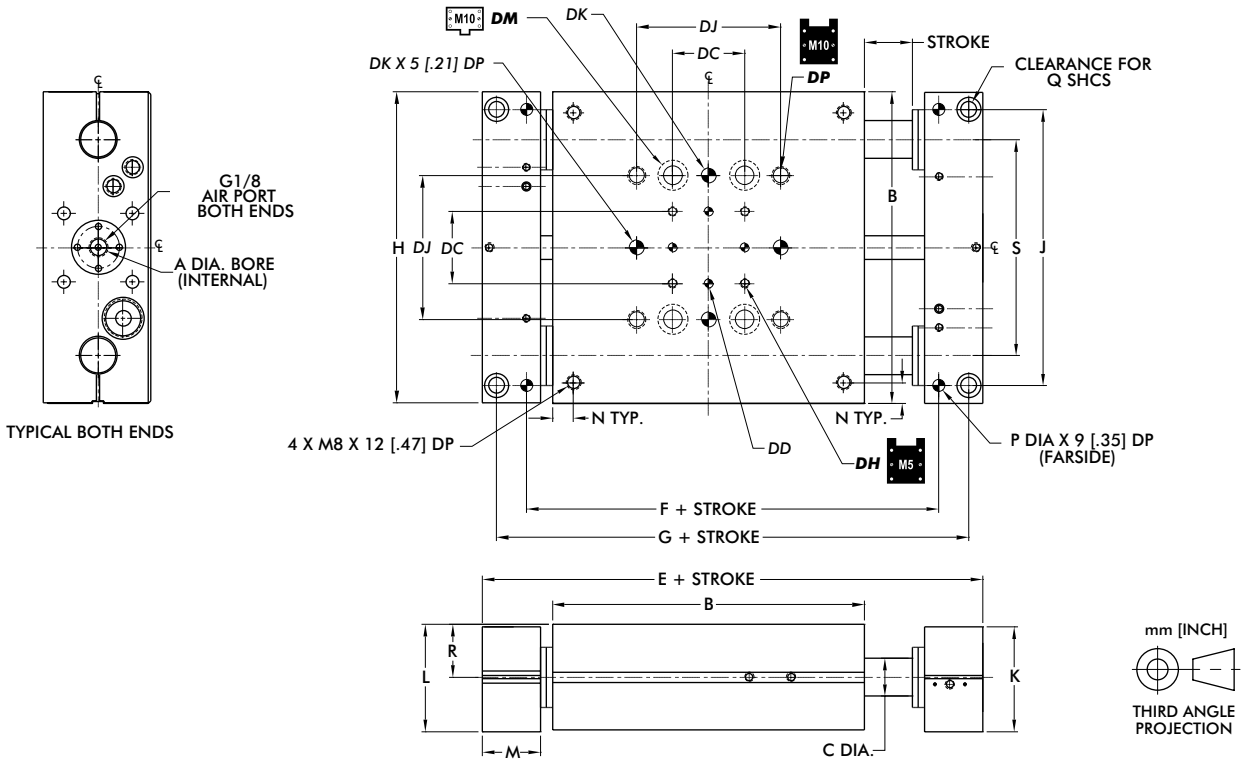

DIRECTCONNECT™ Mounting Pattern Dimensions (all sizes)						
DC	DD	DH	DJ	DK	DM	DP
38.1 [1.500]	5 mm H7 x 6 DP	M5 x 8.5 DP	76.2 [3.000]	8 mm H7 x 9.4 DP	CLR & C'BORE FOR M10	M10 x 12 DP

Model	Bore Ø	Body Size	Shaft Ø	Basic Unit Dimensions												
	A	B	C	E	F	G	H	J	K	L	M	N	P	Q	R	S
DLB-20M	38 [1.50]	165.1 [6.50]	20 [0.787]	239.3 [9.42]	192.66 [7.5850]	224.4 [8.836]	164.6 [6.480]	146.05 [5.7500]	55.4 [2.180]	56.8 [2.236]	[1.210] 30.7	11.1 [0.438]	6.00 [0.2505]	M8	27.94 [1.100]	114.30 [4.500]
DLB-25M		190.5 [7.50]	25 [0.984]	275.3 [10.84]	221.79 [8.7320]	256.7 [10.108]	190.0 [7.480]	171.45 [6.7500]			[1.420] 36.1		8.00 [0.3130]	M10		133.35 [5.250]

Dimensions in mm [in]

Loading Information

F=Externally applied force
W=Weight of payload
F+W=Total force
M=Maximum moment

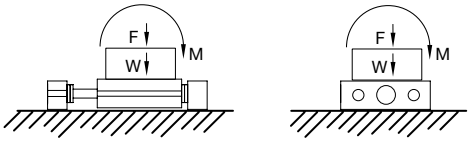

	20	25
Maximum Payload **(W)** horizontal motion using Shock Absorbers	27.2 kg [60 lbs]	45.3 kg [100 lbs]
Maximum Payload **(W)** vertical motion using Shock Absorbers	13.6 kg [30 lbs]	22.0 kg [50 lbs]
Maximum Payload **(W)** horizontal motion using Urethane Bumpers	9.1 kg [20 lbs]	11.3 kg [25 lbs]
Maximum Total Applied Load + Payload **(F+W)**	444 N [100 lbs]	667 N [150 lbs]
Total Maximum Moment about any Axis **(M)**	67.7 Nm [600 in-lbs]	135.5 Nm [1200 in-lbs]

Shock Absorbers and Flow Controls are recommended for all applications

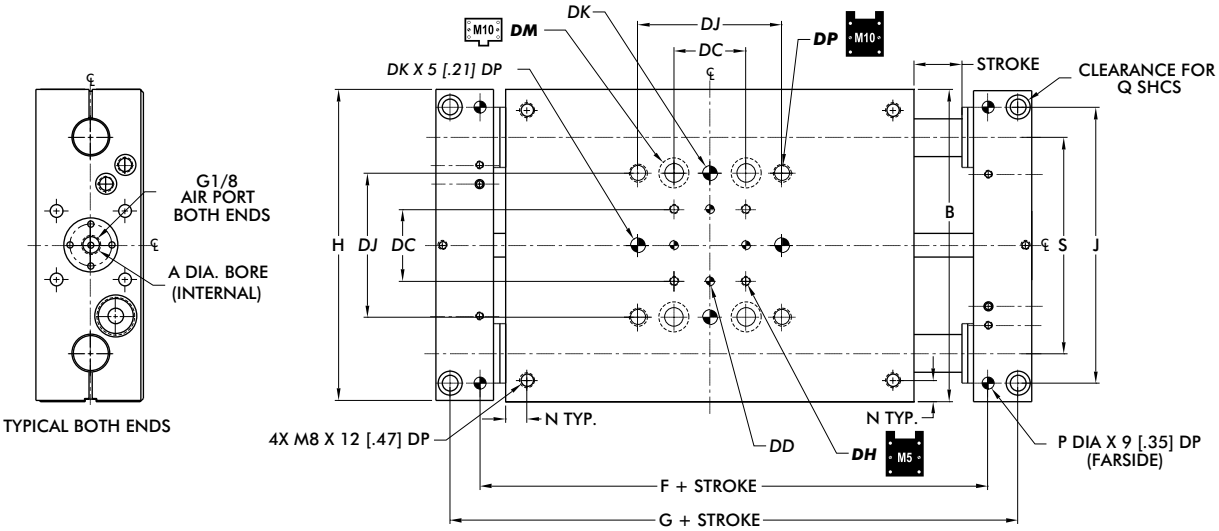

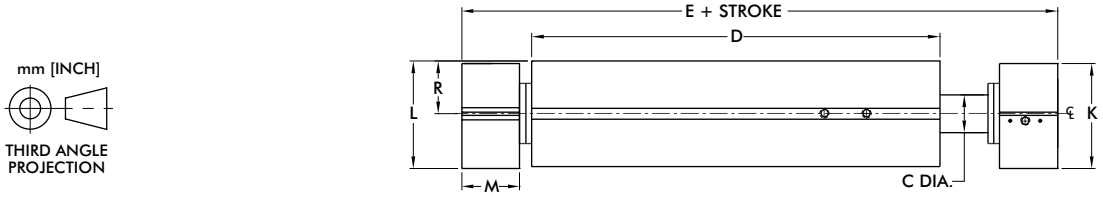

DIRECTCONNECT™ Mounting Pattern Dimensions (all sizes)						
DC	DD	DH	DJ	DK	DM	DP
38.1 [1.500]	5 mm H7 x 6 DP	M5 x 8.5 DP	76.2 [3.000]	8 mm H7 x 9.4 DP	CLR & C'BORE FOR M10	M10 x 12 DP

Model	Bore Ø	Body Size	Shaft Ø	Basic Unit Dimensions													
	A	B	C	D	E	F	G	H	J	K	L	M	N	P	Q	R	S
DLB-20M	38 [1.5]	165.1 [6.50]	20 [0.787]	215.9 [8.50]	290.1 [11.42]	243.46 [9.5850]	275.2 [10.836]	164.6 [6.480]	146.05 [5.7500]	55.4 [2.180]	56.8 [2.236]	30.7 [1.210]	11.1 [0.438]	6.00 [0.2505]	M8	27.94 [1.100]	114.30 [4.500]
DLB-25M		190.5 [7.50]	25 [0.984]	241.3 [9.50]	326.1 [12.84]	272.59 [10.7320]	307.5 [12.108]	190.0 [7.480]	171.45 [6.7500]	55.4 [2.180]		36.1 [1.420]		8.00 [0.3130]	M10		133.35 [5.250]

Dimensions in mm [in]

Loading Information

F=Externally applied force
W=Weight of payload
F+W=Total force
M=Maximum moment

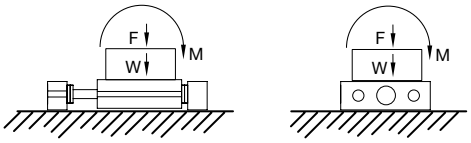

	20	25
Maximum Payload **(W)** horizontal motion using Shock Absorbers	27.2 kg [60 lbs]	45.3 kg [100 lbs]
Maximum Payload **(W)** vertical motion using Shock Absorbers	13.6 kg [30 lbs]	22.0 kg [50 lbs]
Maximum Payload **(W)** horizontal motion using Urethane Bumpers	9.1 kg [20 lbs]	11.3 kg [25 lbs]
Maximum Total Applied Load + Payload **(F+W)**	444 N [100 lbs]	667 N [150 lbs]
Total Maximum Moment about any Axis **(M)**	67.7 Nm [600 in-lbs]	[1200 in-lbs]

Shock Absorbers and Flow Controls are recommended for all applications

DLB SERIES - EXTERNAL AIR CYLINDER

External Air Cylinder Linear Base Slides | Features and Benefits | How To Order

Features:

- Bearing system for smooth operation
- Rugged design produces very reliable long life operation
- Replaceable air cylinder with adjustable cushions
- Urethane bumpers, hardened pads, oil wick
- Optional telescopic airlines transfers air to tooling
- DIRECTCONNECT™ mounting pattern
- Corrosion resistant shafting for corrosive environments
- Position sensing using inductive or magneto resistive sensors

Applications:

- Machining and automation applications
- Harsh environment pick-and-place applications
- OEM Part Transfers applications
- X Y Cartesian Table Applications

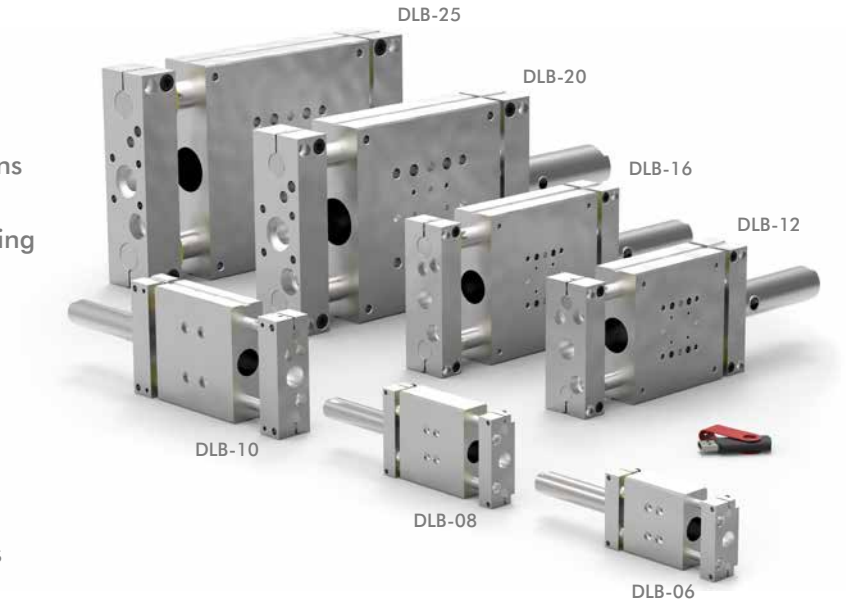

(USB key shown for scale)

How To Order

Cylinder Compatability

Size	Imperial	Metric
06	T	T
08	T	T
10	T, A, N	A
12	T, A, N	A
16	T, A, N	A
20	T, A, N	N
25	T, A, N	N

Base Model
DLB

Style* Description
- **T** Replaceable cylinder w/o adjustable air cushions
- **A** Replaceable cylinder with adjustable air cushions
- **N** Repairable NFPA/VDMA cylinder w/adjustable air cushions

*See chart to the left for cylinder compatability.

Bearing Description
- **B** Linear Ball Bearings*
- **C** Composite Bushings

*Not available on -06 or -08

Shafting Description
- "Blank" Precision Hardened
- **S** Corrosion Resistant

Unit Type Description
- "Blank" Imperial
- **M** Metric

Size	Style	Stroke* Imperial (in)
DLT-06	T	**.5, 1,1.5, 2, 2.5, 3, 4, 5, 6**
DLT-08	T	**.5, 1,1.5, 2, 2.5, 3, 4, 5, 6, 7, 8**
DLT-10	T, A, N	**1-12** @ 1" increments
DLT-12	T, A, N	**1-16** @ 1" increments
DLT-16	T, A, N	**1-20** @ 1" increments
DLT-20	T, A, N	**1-24** @ 1" increments
DLT-25	T, A, N	**1-26** @ 1" increments

Size	Style	Stroke* Metric (mm)
DLT-06M	T	**10, 25, 40, 50, 75, 100, 125, 160**
DLT-08M	T	**10, 25, 40, 50, 75, 100, 125, 160, 175, 200**
DLT-10M	A	**25, 50, 80, 100, 125, 160, 200, 250, 300**
DLT-12M	A	**25, 50, 80, 100, 125, 160, 200, 250, 300, 320, 360, 400**
DLT-16M	A	**25, 50, 80, 100, 125, 160, 200, 250, 300, 320, 360, 400, 500**
DLT-20M	N	**25, 50, 80, 100, 125, 160, 200, 250, 300, 320, 360, 400, 500**
DLT-25M	N	**25, 50, 80, 100, 125, 160, 200, 250, 300, 320, 360, 400, 500**

*Custom strokes available. Consult factory.

Dimensions and technical information are subject to change without notice

DLB SERIES - EXTERNAL AIR CYLINDER

External Air Cylinder Linear Base Slides | Accessories

Shock/Stop Accessories	Model Sizes	Style	Part Number	Qty/Unit
Shock Absorber	06, 08	All	SHOK-030	1-2
	10		SHOK-028	
	12, 16,		SHOK-010	
	20, 25		SHOK-029	
Adjustable Hard Stop	06, 08		DLT-0623	
	10, 12, 16, 20, 25		DLT-1023	

Sensor Accessories	Model Sizes	Style	Part Number	Qty/Unit
PNP Inductive Sensor with Quick Disconnect*	All Models	All	OISP-011	1-2
NPN Inductive Sensor with Quick Disconnect*			OISN-011	
PNP Magneto Resistive Sensor w/Qk Disconnect*	06, 08, 10, 12, 16	**T, A, N**	OHSP-005	
NPN Magneto Resistive Sensor w/Quick Disconnect*			OHSN-005	
PNP Magneto Resistive Sensor w/Qk Disconnect*	20, 25	**N**	OHSP-020	
NPN Magneto Resistive Sensor w/Qk Disconnect*			OHSN-020	
Quick Disconnect 2 Meter Cable Length*	All Models	All	CABL-010	
Quick Disconnect 5 Meter Cable Length*			CABL-013	
Cable Extension Cord 1M Length*	All Models	All	CABL-015	
Cable Extension Cord 2M Length*			CABL-016	

Pneumatic Accessories	Model Sizes	Style	Part Number	Qty/Unit
1/8 NPT Telescopic Airlines (up to 6")	10, 12, 16	All	OTAL-039	1-4
1/8 NPT Telescopic Airlines (up to 12")	10, 12, 16		OTAL-040	
1/8 NPT Telescopic Airlines (up to 18")	10, 12, 16, 20, 25		OTAL-041	
1/8 NPT Telescopic Airlines (up to 24")	20, 25		OTAL-042	
#10-32 NPT Adjustable Flow Control	06, 08		VLVF-007	1-2
1/8 NPT Adjustable Flow Control	10, 12, 16, 20, 25		VLVF-004	
G1/8 Telescopic Airlines (up to 160mm)	10, 12, 16		OTAL-045	1-4
G1/8 Telescopic Airlines (up to 300mm)	10, 12, 16		OTAL-046	
G1/8 Telescopic Airlines (up to 450mm)	10, 12, 16, 20, 25		OTAL-047	
G1/8 Telescopic Airlines (up to 600mm)	20, 25		OTAL-048	
G1/8 Adjustable Flow Control	10, 12, 16, 20, 25		VLVF-005	1-2
G1/8 Male to 1/8 NPT Adapter	20, 25		PLFT-025	

*Sensor and cable sold separately.

See page GR-LIN-35 for Accessory Mounting Technical Data.

DLB SERIES - EXTERNAL AIR CYLINDER

External Air Cylinder Linear Base Slides | Technical Specifications

Specifications	Units	06	08	10	12
Max. Air Pressure	bar [psi]	7 [100]			
Thrust Force @ 5.5 bar [80psi]	N [lbs]	89 [20]		145 [31]	289 [65]
Weight (basic unit)	kg [lb]	0.15 [0.34]	0.31 [0.69]	0.90 [1.98]	1.66 [3.73]
Additional Weight per Stroke	g/mm [lbs/in]	0.88 [0.05]	1.23 [0.07]	1.4 [0.09]	2.9 [0.16]
Cylinder Bore Ø	mm [in]	16 [0.563]		20 [0.75]	25 [1.00]
Shaft Ø	mm [in]	6 [0.236]	8 [0.315]	9.5 [0.375]	12 [0.472]
Maximum Moment Load	N-m [in-lbs]	1.7 [15]	3.4 [30]	8.4 [75]	16.9 [150]

Specifications	Units	16	20	25
Max. Air Pressure	bar [psi]	7 [100]		
Thrust Force @ 5.5 bar [80psi]	N [lbs]	289 [65]	578 [130]	578 [130]
Weight (basic unit)	kg [lb]	2.3 [5.03]	5.9 [12.9]	8.3 [18.0]
Additional Weight per Stroke	g/mm [lbs/in]	4.2 [0.23]	9.5 [0.53]	12.1 [0.68]
Cylinder Bore Ø	mm [in]	25 [1.00]	32 [1.25]	32 [1.25]
Shaft Ø	mm [in]	16 [0.630]	20 [0.787]	25 [0.984]
Maximum Moment Load	N-m [in-lbs]	33.9 [300]	67.8 [600]	135 [1200]

Dimensions and technical information are subject to change without notice

External Air Cylinder Linear Base Slides | Dimensions and Technical Specifications

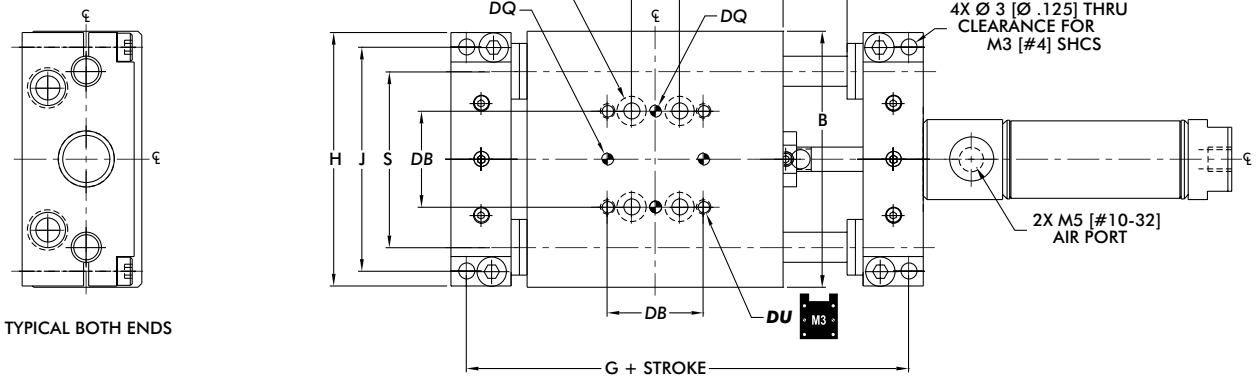

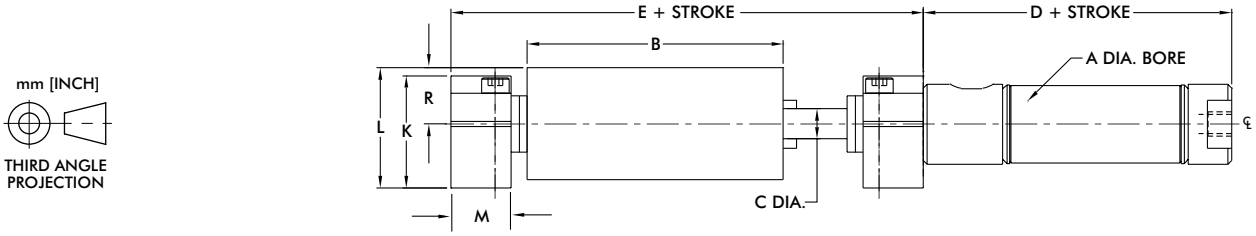

DIRECTCONNECT™ Mounting Pattern Dimensions (all sizes)				
DA	**DB**	**DQ**	**DS**	**DU**
9.5 [0.375]	19.1 [0.750]	3H7 x 2 DP [0.0940 x 0.078 DP]	CLR & C'BORE FOR M3 [CLR & C'BORE FOR #4]	M3 x 6 DP [#4-40 x .25 DP]

Model	Bore Ø	Body Size	Shaft Ø	Basic Unit Dimensions									
	A	**B**	**C**	**D**	**E**	**G**	**H**	**J**	**K**	**L**	**M**	**R**	**S**
DLB-06	16 [0.563]	50.8 [2.00]	6.0 [0.236]	48.4 [1.91]	81.0 [3.19]	75.1 [2.956]	50.3 [1.980]	44.4 [1.750]	22.2 [0.875]	23.7 [0.936]	11.9 [0.470]	11.13 [0.438]	34.93 [1.375]
DLB-08		63.5 [2.50]	8.0 [0.315]		93.7 [3.69]	87.8 [3.456]	62.7 [2.470]	57.1 [2.250]					44.45 [1.750]

Dimensions in mm [in]

Loading Information

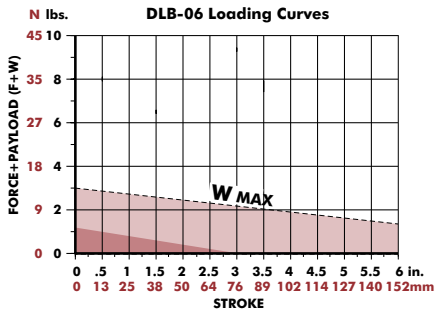

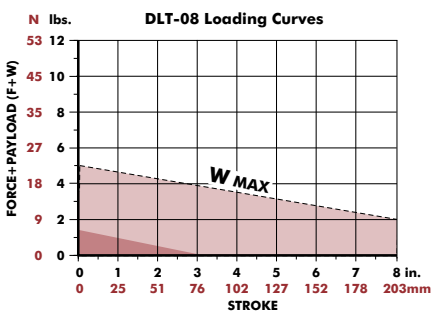

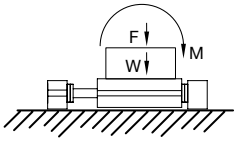

F=Externally applied force
W=Weight of payload
F+**W**=Total force

Shock Absorbers and Flow Controls are recommended for all applications

(**W**) in this range use **Single Shock** in both directions

(**W**) in this range use **Bumpers or Cushioned Cylinder**

Shaded shock absorption ranges of horizontal payload (W) @ 80psi, flow controls fully open. For vertical applications do not exceed 1/2 of the recommended payload due to the additional acceleration effect of gravity.

DLB-10/12/16-T, A

External Air Cylinder Linear Base Slides | Dimensions and Technical Specifications

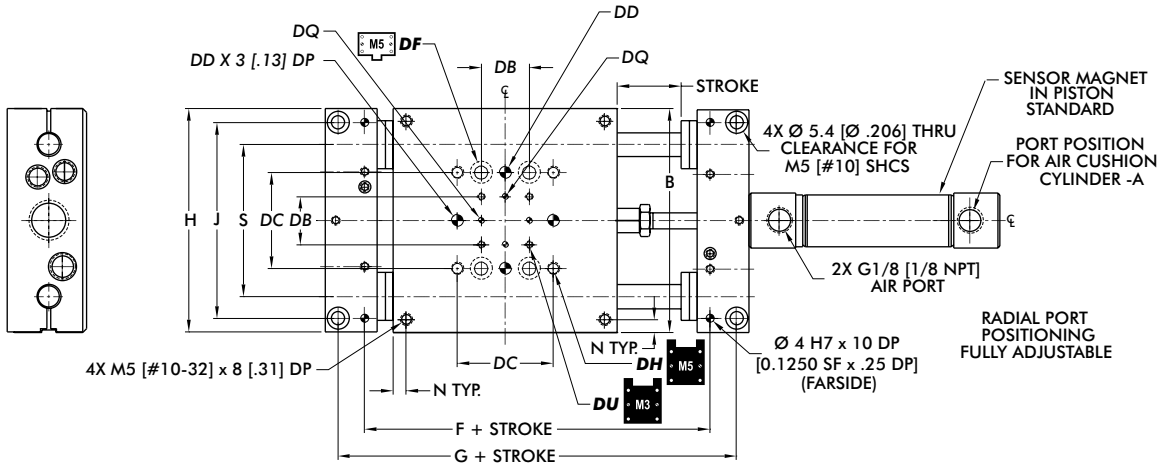

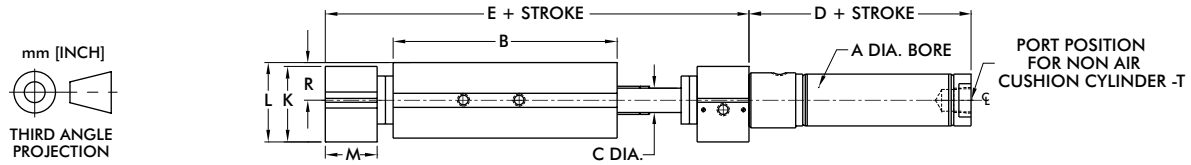

DIRECTCONNECT™ Mounting Pattern Dimensions (all sizes)						
DB	DC	DD	DF	DH	DQ	DU
19.1 [0.750]	38.1 [1.500]	5mm H7 x 6 DP [0.1880 x 0.25 DP]	CLR & C'BORE FOR M5 [CLR & C'BORE FOR #10]	M5 x 8.5 DP [#10-32 x 0.34 DP]	3H7 x 2 DP [0.0940 x 0.078 DP]	M3 x 6 DP [#4-40 x 0.25 DP]

Model	Bore Ø	Body Size	Shaft Ø	Basic Unit Dimensions											
	A	B	C	D	E	F	G	H	J	K	L	M	N	R	S
DLB-10	20 [0.75]	88.9 [3.50]	9.5 [0.375]	88.0 [2.91]	149.4 [5.63]	118.05 [4.3975]	139.1 [5.228]	88.5 [3.485]	77.7 [3.060]	29.9 [1.178]	31.6 [1.245]	20.7 [0.813]	N/A	15.09 [0.594]	60.33 [2.375]
DLB-12	25 [1 1/16]	101.6 [4.00]	12 [0.472]	91.5 [2.88]	162.1 [6.13]	130.75 [4.8975]	151.8 [5.728]	101.2 [3.985]	88.9 [3.500]	41.0 [1.615]	42.1 [1.657]		9.5 [0.375]	20.65 [0.813]	69.85 [2.750]
DLB-16		120.7 [4.75]	16 [0.630]		181.1 [6.88]	149.80 [5.6475]	170.9 [6.478]	120.3 [4.735]	107.9 [4.250]						82.55 [3.250]

Dimensions in mm [in]

Loading Information

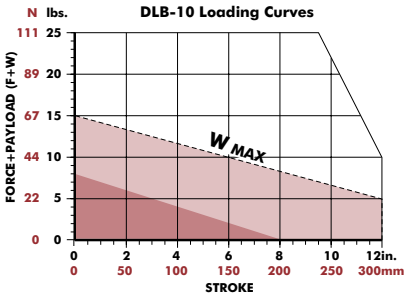

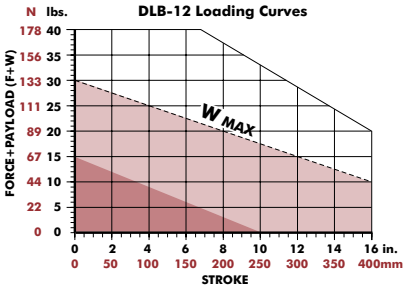

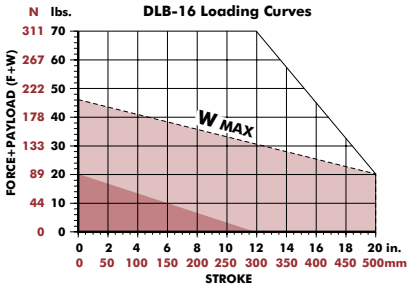

F=Externally applied force
W=Weight of payload
F+W=Total force

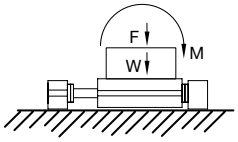

Shock Absorbers and Flow Controls are recommended for all applications

(**W**) in this range use **Single Shock** in both directions

(**W**) in this range use **Bumpers or Cushioned Cylinder**

Shaded shock absorption ranges of horizontal payload (W) @ 80psi, flow controls fully open. For vertical applications do not exceed 1/2 of the recommended payload due to the additional acceleration effect of gravity.

DLB-10/12/16-N

External Air Cylinder Linear Base Slides | Dimensions and Technical Specifications

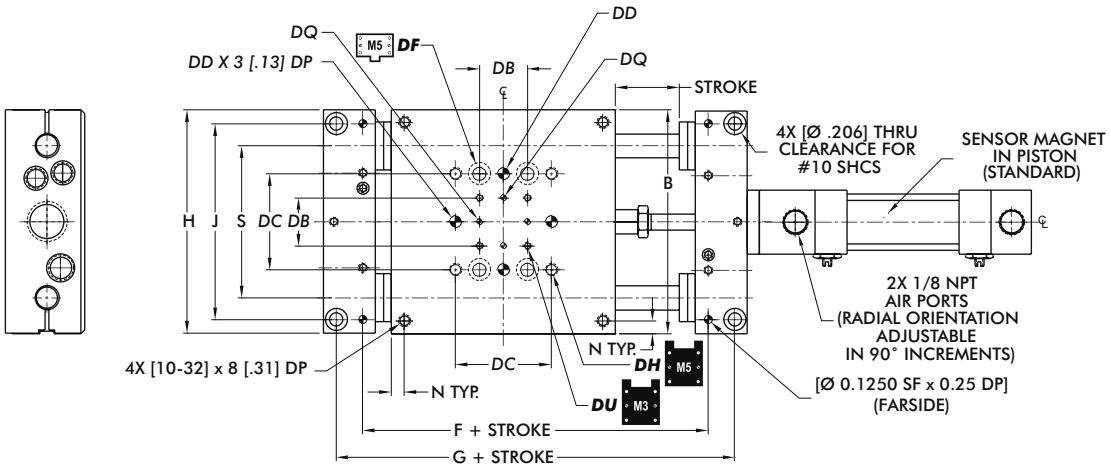

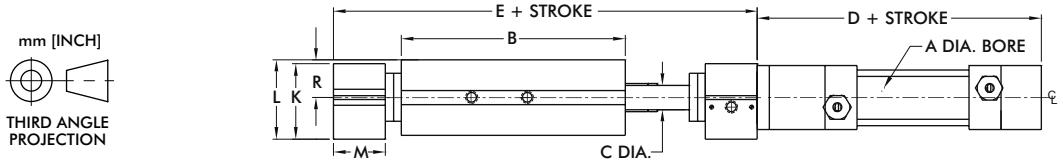

DIRECTCONNECT™ Mounting Pattern Dimensions (all sizes)						
DB	DC	DD	DF	DH	DQ	DU
19.1 [0.750]	38.1 [1.500]	[0.1880 x 0.25 DP]	[CLR & C'BORE FOR #10]	[#10-32 x 0.34 DP]	[0.0940 x 0.078 DP]	[#4-40 x .25 DP]

Model	Bore Ø	Body Size	Shaft Ø	Basic Unit Dimensions											
	A	B	C	D	E	F	G	H	J	K	L	M	N	R	S
DLB-10	20 [0.75]	88.9 [3.50]	9.5 [0.375]	87.4 [3.44]	149.4 [5.63]	118.05 [4.3975]	139.1 [5.228]	88.5 [3.485]	77.7 [3.060]	29.9 [1.178]	31.6 [1.245]	20.7 [0.813]	N/A	15.09 [0.594]	60.33 [2.375]
DLB-12	25 [1 1/8]	101.6 [4.00]	12 [0.472]		162.1 [6.13]	130.75 [4.8975]	151.8 [5.728]	101.2 [3.985]	88.9 [3.500]	41.0 [1.615]	42.1 [1.657]		9.5 [0.375]	20.65 [0.813]	69.85 [2.750]
DLB-16		120.7 [4.75]	16 [0.630]		181.1 [6.88]	149.80 [5.6475]	170.9 [6.478]	120.3 [4.735]	107.9 [4.250]						82.55 [3.250]

Dimensions in mm [in]

Loading Information

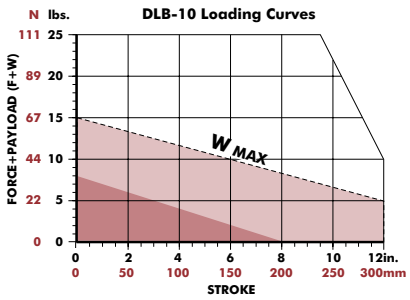

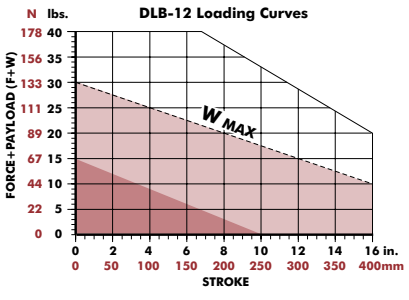

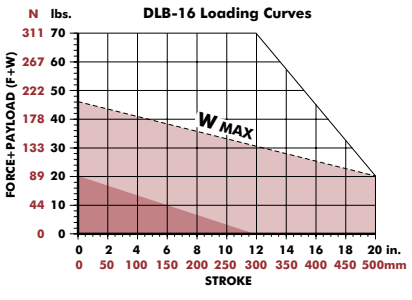

F=Externally applied force
W=Weight of payload
F+W=Total force

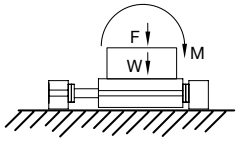

Shock Absorbers and Flow Controls are recommended for all applications

(**W**) in this range use **Single Shock** in both directions

(**W**) in this range use **Bumpers or Cushioned Cylinder**

Shaded shock absorption ranges of horizontal payload (W) @ 80psi, flow controls fully open. For vertical applications do not exceed 1/2 of the recommended payload due to the additional acceleration effect of gravity.

DLB-20/25-T, A

External Air Cylinder Linear Base Slides | Dimensions and Technical Specifications

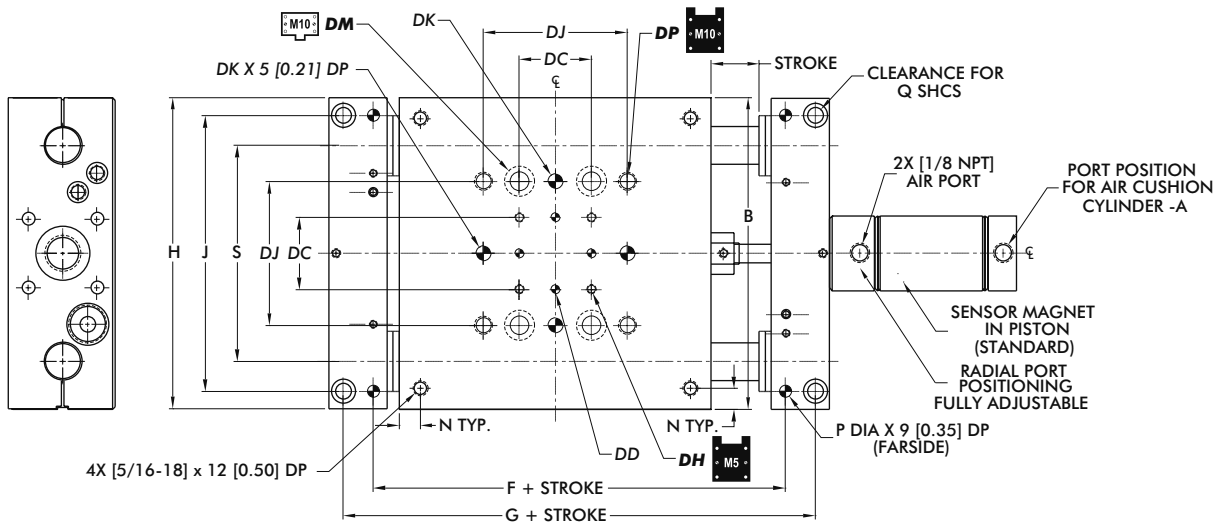

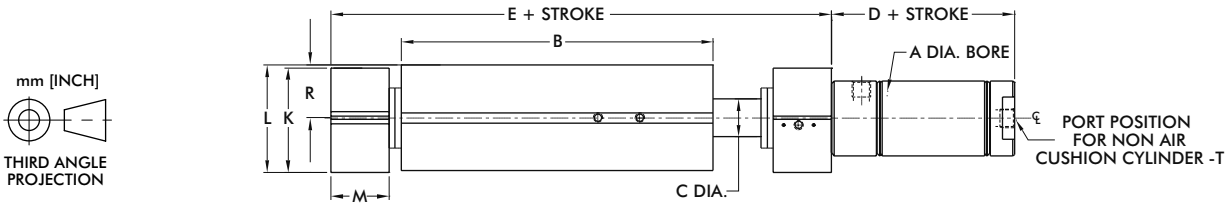

DIRECTCONNECT™ Mounting Pattern Dimensions (all sizes)						
DC	DD	DH	DJ	DK	DM	DP
38.1 [1.500]	[0.1880 x 0.25 DP]	[#10-32 x 0.38 DP]	76.2 [3.000]	[0.3130 x 0.37 DP]	[CLR & C'BORE FOR 3/8]	[3/8-16 x .50 DP]

Model	Bore Ø	Body Ø	Shaft Ø	Basic Unit Dimensions													
	A	B	C	D	E	F	G	H	J	K	L	M	N	P	Q	R	S
DLB-20	38.1 [1 1/2]	165.1 [6.50]	20 [0.787]	76.2 [3.00]	239.3 [9.42]	192.66 [7.5850]	224.4 [8.836]	164.6 [6.480]	146.05 [5.7500]	55.4 [2.180]	56.8 [2.236]	30.7 [1.210]	11.1 [0.438]	6.00 [0.2505]	M8	27.94 [1.100]	114.30 [4.500]
DLB-25		190.5 [7.50]	25 [0.984]		275.3 [10.84]	221.79 [8.7320]	256.7 [10.108]	190.0 [7.480]	171.45 [6.7500]			36.1 [1.420]		8.00 [0.3130]	M10		113.35 [5.250]

Dimensions in mm [in]

Loading Information

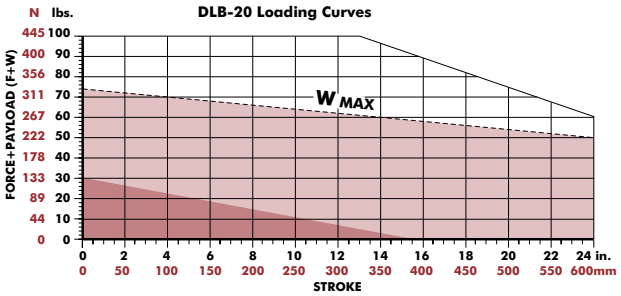

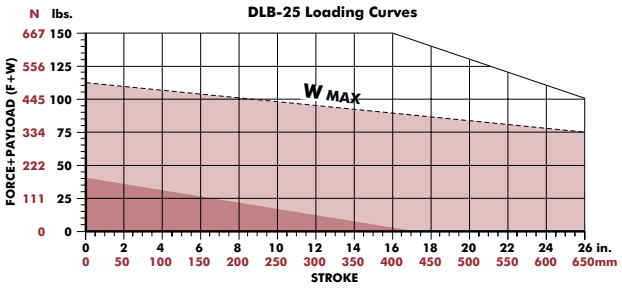

F=Externally applied force
W=Weight of payload
F+W=Total force

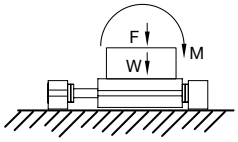

Shock Absorbers and Flow Controls are recommended for all applications

(**W**) in this range use **Single Shock** in both directions

(**W**) in this range use **Bumpers or Cushioned Cylinder**

Shaded shock absorption ranges of horizontal payload (W) @ 80psi, flow controls fully open. For vertical applications do not exceed 1/2 of the recommended payload due to the additional acceleration effect of gravity.

External Air Cylinder Linear Base Slides | Dimensions and Technical Specifications

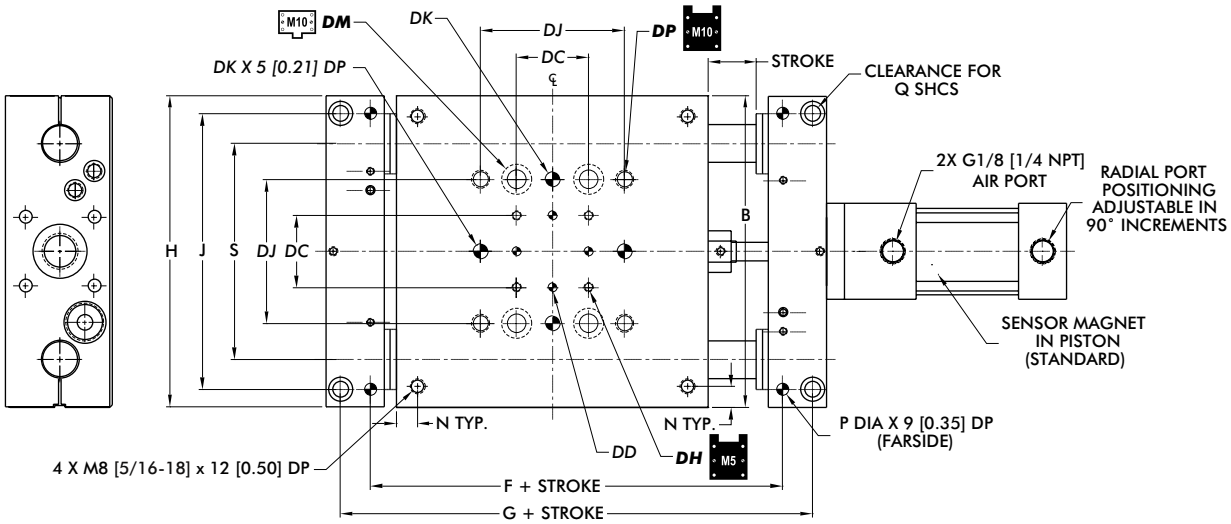

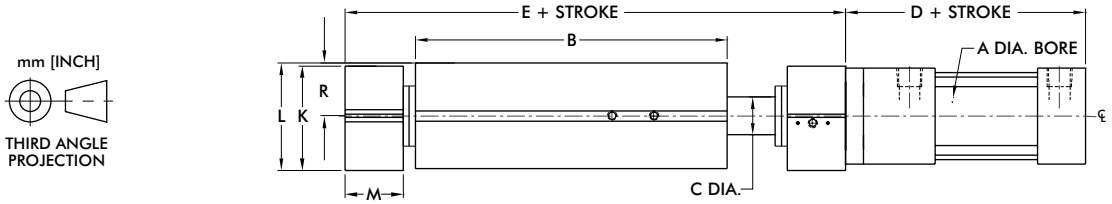

DIRECTCONNECT™ Mounting Pattern Dimensions (all sizes)						
DC	DD	DH	DJ	DK	DM	DP
38.1 [1.500]	5 mm H7 x 6 DP [0.1880 x 0.25 DP]	M5 x 9 DP [#10-32 x 0.38 DP]	76.2 [3.000]	8 mm H7 x 9.4 DP [0.3130 x 0.37 DP]	CLR & C'BORE FOR M10 [CLR & C'BORE FOR 3/8]	M10 x 12 DP [3/8-16 x 0.50 DP]

Model	Bore Ø Body Ø Shaft Ø	Basic Unit Dimensions															
	A	B	C	D	E	F	G	H	J	K	L	M	N	P	Q	R	S
DLB-20	38.1 [1 1/2]	165.1 [6.50]	20 [0.787]	92.2 [3.63]	239.3 [9.42]	192.66 [7.5850]	224.4 [8.836]	164.6 [6.480]	146.05 [5.7500]	55.4 [2.180]	56.8 [2.236]	30.7 [1.210]	11.1 [0.438]	6.00 [0.2505]	M8	27.94 [1.100]	114.30 [4.500]
DLB-25		190.5 [7.50]	25 [0.984]		275.3 [10.84]	221.79 [8.7320]	256.7 [10.108]	190.0 [7.480]	171.45 [6.7500]			36.1 [1.420]		8.00 [0.3130]	M10		113.35 [5.250]

Dimensions in mm [in]

Loading Information

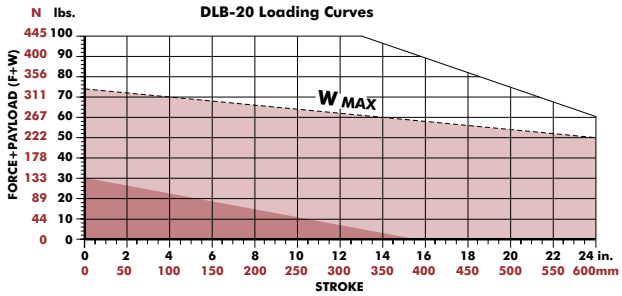

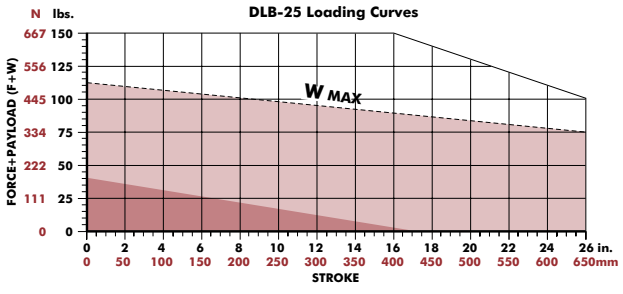

F=Externally applied force
W=Weight of payload
F+W=Total force

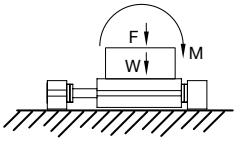

Shock Absorbers and Flow Controls are recommended for all applications

(**W**) in this range use **Single Shock** in both directions

(**W**) in this range use **Bumpers or Cushioned Cylinder**

Shaded shock absorption ranges of horizontal payload (W) @ 80psi, flow controls fully open. For vertical applications do not exceed 1/2 of the recommended payload due to the additional acceleration effect of gravity.

DLT SERIES - INTERNAL AIR CYLINDER

Internal Air Cylinder Linear Thruster Slides | Features and Benefits | How To Order

Features:

- 3 Models: **-B** block style, **-E** short body & **-L** long body
- Bearing system for smooth operation
- Rugged design produces very reliable long life operation
- Internal air cylinder for space-limited applications
- Urethane bumpers, hardened pads, oil wick
- Optional telescopic airlines transfers air to tooling
- DIRECTCONNECT™ mounting pattern
- Corrosion resistant shafting for corrosive environments
- Position sensing using inductive or magneto resistive sensors
- Viton® seals for high temperature applications

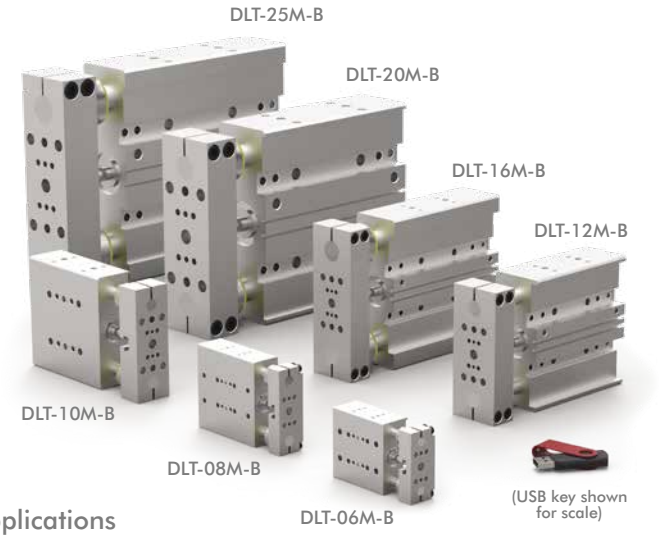

Applications:

- Machining, harsh environment, pick-and-place automation applications
- Lift table applications

How To Order

Base Model
DLT

Size
06M 10M 20M
08M 12M 25M
16M

Bearing Description
B Linear Ball Bearings†
C Composite Bushings
†Not available on -06 & -08

Style Description
B Block Thruster
E Short Body
L Long Body

Seals Description
"Blank" Buna-N
V Viton® High Temperature

Shafting Description
"Blank" Precision Hardened
S Corrosion Resistant

-B Style	**Stroke*** Metric (mm)
DLT-06M-B	**6, 12, 25, 30**
DLT-08M-B	**6, 12, 25, 30, 40, 44**
DLT-10M-B	**12, 25, 40, 50**
DLT-12M-B	**12, 25, 40, 50**
DLT-16M-B	**12, 25, 40, 50, 65, 75**
DLT-20M-B	**12, 25, 40, 50, 65, 75, 85, 100**
DLT-25M-B	**12, 25, 40, 50, 65, 75, 85, 100, 115, 125**

-E Style	**Stroke*** Metric (mm)
DLT-06M-E	**6, 12, 25, 30**
DLT-08M-E	**6, 12, 25, 40, 44**
DLT-10M-E	**25, 50**
DLT-12M-E	**25, 50**
DLT-16M-E	**25, 50, 75**
DLT-20M-E	**25, 50, 75, 100**
DLT-25M-E	**25, 50, 75, 100, 125**

-L Style	**Stroke*** Metric (mm)
DLT-06M-L	**12, 25, 40, 50, 65, 75**
DLT-08M-L	**12, 25, 40, 50, 65, 75, 85**
DLT-10M-L	**25, 50, 80, 100**
DLT-12M-L	**25, 50, 80, 100, 125**
DLT-16M-L	**25, 50, 80, 100, 125, 150**
DLT-20M-L	**25, 50, 75, 100, 125, 160**
DLT-25M-L	**25, 50, 75, 100, 125, 160, 175**

*Custom strokes available. Consult factory.

DLT SERIES - INTERNAL AIR CYLINDER

Internal Air Cylinder Linear Thruster Slides | Accessories

Shock/Stop & Mounting Accessories	Model Numbers	Style	Part Number	Qty/Unit
Universal Mounting Kit (Stop/Shock)	06	All	OSAK-069	1-2 on **-B**
	08		OSAK-070	
Universal Mounting Kit (Stop/Shock/Sensor)	10		OSAK-055	
	12		OSAK-057	
	16		OSAK-059	
	20		OSAK-061	
	25		OSAK-063	
Shock Absorber	06, 08		SHOK-030	1-4 on **-E, -L**
	10		SHOK-028	
	12, 16,		SHOK-010	
	20, 25		SHOK-029	
Adjustable Hard Stop	06, 08		DLT-0623	
	10, 12, 16, 20, 25		DLT-1023	
Urethane Bumper/Stop Collar Kit	06	**E, L**	OSAK-067	1
	08		OSAK-068	
	10		OSAK-065	
	12		OSAK-066	
	16		OSAK-060	
	20		OSAK-062	
	25		OSAK-064	
Base Flange Kit	See Datasheet	**B**	--	

Sensor Accessories	Model Numbers	Style	Part Number	Qty/Unit
Inductive Sensor Mounting Kit	06	All	OSMK-076	1 on **-B**
	08		OSMK-077	
PNP Inductive Sensor with Quick Disconnect*	06, 08		OISP-014	1-2 on **-E, -L**
NPN Inductive Sensor with Quick Disconnect*			OISN-014	
PNP Inductive Sensor with Quick Disconnect*	10, 12, 16, 20, 25		OISP-011	
NPN Inductive Sensor with Quick Disconnect*			OISN-011	
PNP Magneto Resistive with Quick Disconnect*	All Models		OHSP-017	1-2
NPN Magneto Resistive with Quick Disconnect*			OHSN-017	
Quick Disconnect 2 Meter Cable Length*	All Models		CABL-010	
Quick Disconnect 5 Meter Cable Length*			CABL-013	

*Sensor and cable sold separately.

Pneumatic Accessories	Model Numbers	Style	Part Number	Qty/Unit
G1/8 Telescopic Airlines (up to 50mm)	10, 12, 16	**B, E**	OTAL-043	1-4
G1/8 Telescopic Airlines (up to 80mm)		**B, E, L**	OTAL-044	
G1/8 Telescopic Airlines (up to 100mm)	20, 25	**B, E**	OTAL-051	
G1/8 Telescopic Airlines (up to 125mm)			OTAL-052	
G1/8 Telescopic Airlines (up to 160mm)	10, 12, 16	**L**	OTAL-045	
G1/8 Telescopic Airlines (up to 300mm)	20, 25		OTAL-046	
M5 Adjustable Flow Control	06, 08, 10, 12, 16	All	VLVF-008	1-2
G1/8 Adjustable Flow Control	20, 25		VLVF-005	
Seal Kits	See Datasheets			1

See page GR-LIN-36 for Accessory Mounting Technical Data.

DLT SERIES - INTERNAL AIR CYLINDER

Internal Air Cylinder Linear Thruster Slides | Technical Specifications

Specifications	Units	06-B, E	06-L	08-B, E	08-L	10-B, E	10-L	12-B, E	12-L
Max. Air Pressure	bar [psi]	7 [100]							
Thrust Force @ 5.5 bar [80psi]	N [lbs]	89 [20]				155 [35]		275 [62]	
Weight **-B** (basic unit)	kg [lb]	0.15 [0.34]	--	0.30 [0.65]	--	0.82 [1.81]	--	1.31 [2.88]	--
Weight **-E, L** (basic unit)	kg [lb]		0.28 [0.61]		0.44 [0.96]	0.84 [1.87]	0.88 [1.95]	1.35 [2.98]	1.46 [3.21]
Cylinder Bore Ø	mm [in]	14.3 [0.563]				19 [0.75]		25 [1.0]	
Shaft Ø	mm [in]	6 [0.236]		8 [0.315]		9.5 [0.375]		12 [0.472]	
Max (**M**) Vertical Motion	Nm [in-lbs]	0.6 [5]		1.1 [10]		2.8 [25]		5.6 [50]	

Specifications	Units	16-B, E	16-L	20-B, E	20-L	25-B, E	25-L
Max. Air Pressure	bar [psi]	7 [100]					
Thrust Force @ 5.5 bar [80psi]	N [lbs]	275 [62]		622 [140]			
Weight **-B** (basic unit)	kg [lb]	1.99 [4.38]	--	5.1 [11.6]	--	7.2 [15.7]	--
Weight **-E, L** (basic unit)	kg [lb]	2.07 [4.56]	2.03 [4.81]	5.2 [11.6]	5.5 [12.0]	7.4 [16.4]	7.9 [17.4]
Cylinder Bore Ø	mm [in]	25 [1.0]		38 [1.5]			
Shaft Ø	mm [in]	16 [0.630]		20 [0.787]		25 [0.984]	
Max (**M**) Vertical Motion	Nm [in-lbs]	11.3 [100]		28.2 [250]		56.4 [500]	

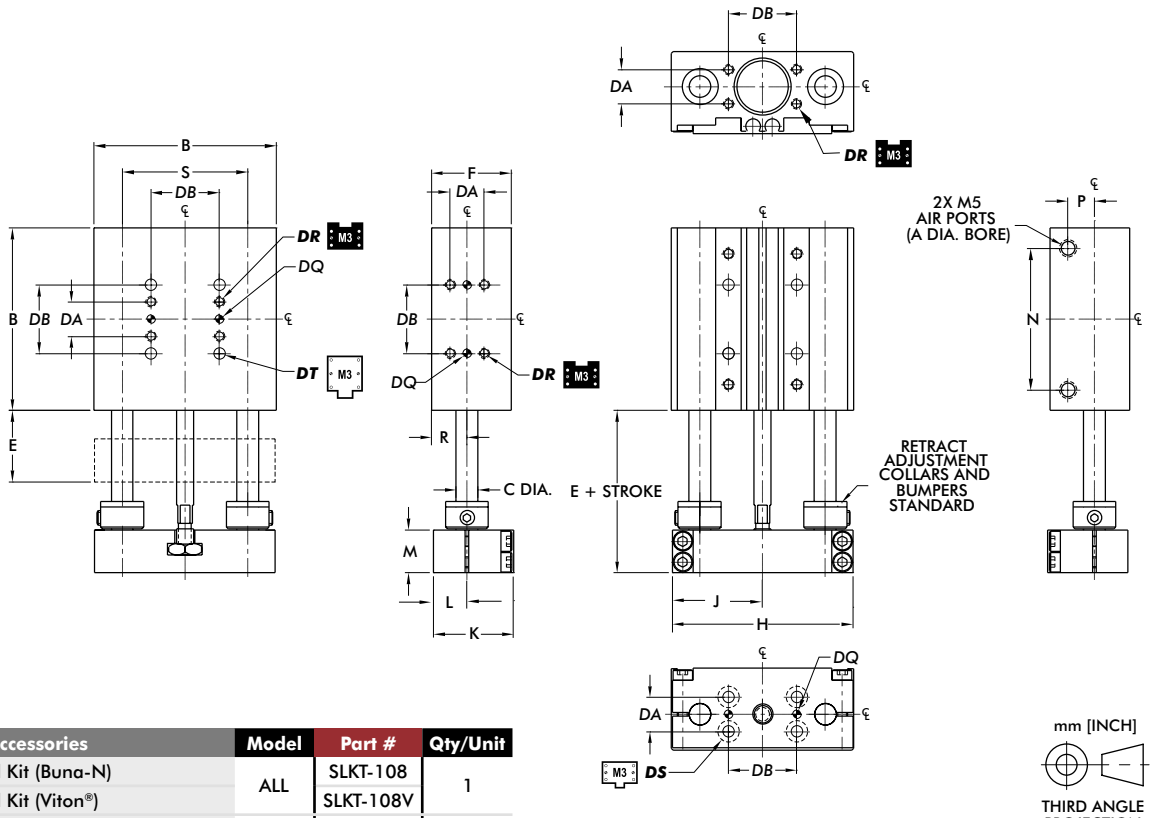

Pneumatic Accessories	Model	Part #	Qty/Unit
Cylinder Seal Kit (Buna-N)	ALL	SLKT-108	1
Cylinder Seal Kit (Viton®)		SLKT-108V	
Base Flange Kit (See page GR-LIN-36 for information)	-06	ODLT-015	1
	-08	ODLT-016	1

mm [INCH]

THIRD ANGLE PROJECTION

DIRECTCONNECT™ Mounting Pattern Dimensions (all sizes)					
DA	DB	DQ	DR	DS	DT
9.5 [0.375]	19.1 [0.750]	3H7 x 2 DP	M3 x 6 DP	CLR & C'BORE FOR M3	CLR & C'BORE FOR M3

Model	Bore Ø	Body Size	Shaft Ø	Basic Unit Dimensions										
	A	B	C	E	F	H	J	K	L	M	N	P	R	S
DLT-06M	14 [0.563]	50.8 [2.00]	6.0 [0.236]	19.9 [0.783]	22.4 [0.88]	50.3 [1.980]	25.1 [0.990]	22.2 [0.875]	9.3 [0.365]	11.9 [0.470]	39.4 [1.55]	7.4 [0.29]	9.9 [0.390]	34.93 [1.375]
DLT-08M		63.5 [2.50]	8.0 [0.315]			62.7 [2.470]	31.0 [1.235]				52.1 [2.05]			44.45 [1.75]

Dimensions in mm [in]

Loading Information

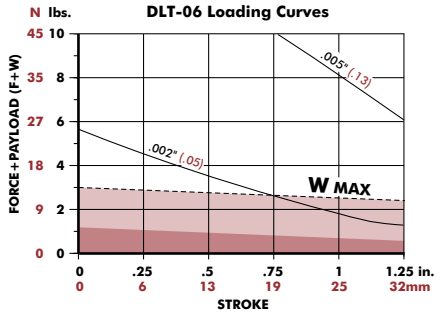

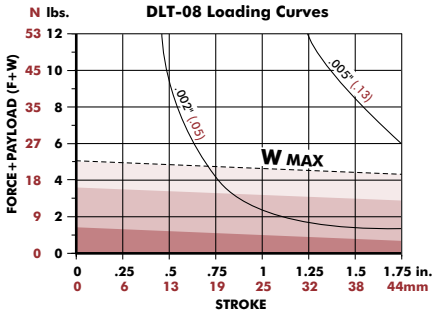

F=Externally applied force
W=Weight of payload
F+W=Total force
M=Maximum moment (in-lb. or N-m)

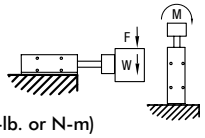

Shock Absorbers and Flow Controls are recommended for all applications

Use **Double Shocks** in both directions | Use **Single Shock** in both directions | Use **Bumpers or Cushioned Cylinder**

Shaded shock absorption ranges of horizontal payload (W) @ 80psi, flow controls fully open. For vertical applications do not exceed 1/2 of the recommended payload due to the additional acceleration effect of gravity.

DLT-06/08M-E

Internal Air Cylinder Linear Thruster Slides | Dimensions and Technical Specifications

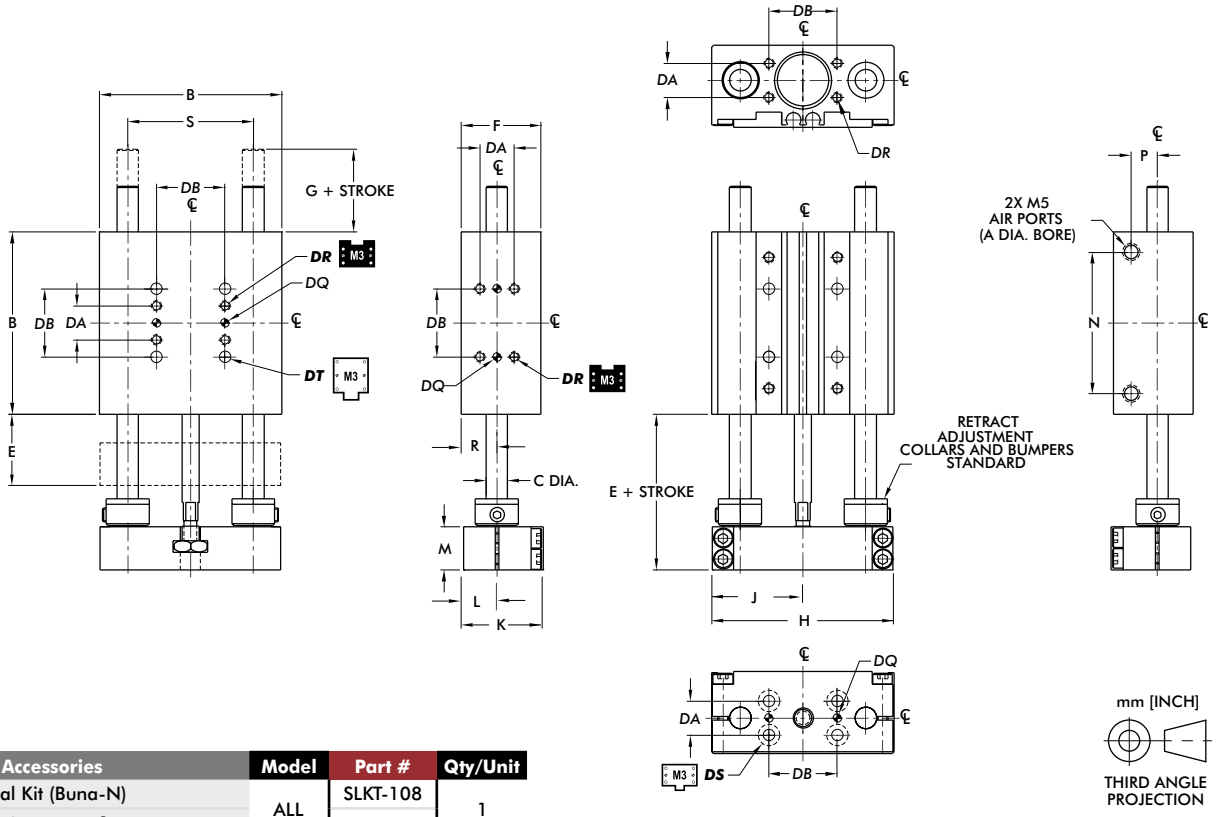

Pneumatic Accessories	Model	Part #	Qty/Unit
Cylinder Seal Kit (Buna-N)	ALL	SLKT-108	1
Cylinder Seal Kit (Viton®)		SLKT-108V	

DIRECTCONNECT™ Mounting Pattern Dimensions (all sizes)					
DA	DB	DQ	DR	DS	DT
9.5 [0.375]	19.1 [0.750]	3H7 x 2 DP	M3 x 6 DP	CLR & C'BORE FOR M3	CLR & C'BORE FOR M3

Model	Bore Ø	Body Size	Shaft Ø	Basic Unit Dimensions											
	A	B	C	E	F	G	H	J	K	L	M	N	P	R	S
DLT-06M	14 [0.563]	50.8 [2.00]	6.0 [0.236]	19.9 [0.783]	22.4 [0.88]	16.8 [0.66]	50.3 [1.980]	25.1 [0.990]	22.2 [0.875]	9.3 [0.365]	11.9 [0.470]	39.4 [1.55]	7.4 [0.29]	9.9 [0.390]	34.93 [1.375]
DLT-08M		63.5 [2.50]	8.0 [0.315]			10.4 [0.41]	62.7 [2.470]	31.0 [1.235]				52.1 [2.05]			44.45 [1.750]

Dimensions in mm [in]

Loading Information

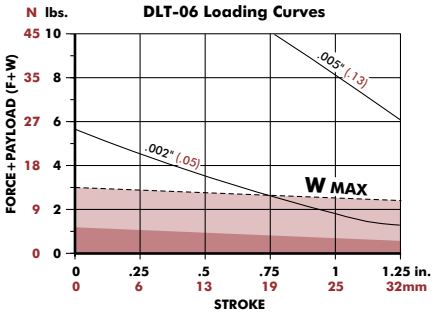

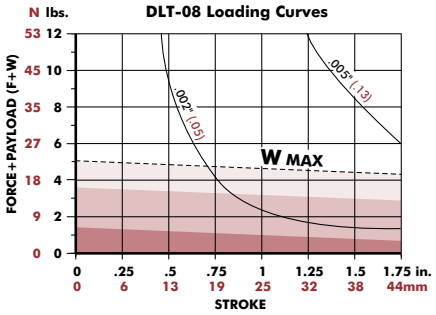

F=Externally applied force
W=Weight of payload
F+W=Total force
M=Maximum moment (in-lb. or N-m)

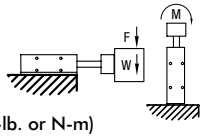

Shock Absorbers and Flow Controls are recommended for all applications

Use **Double Shocks** in both directions | Use **Single Shock** in both directions | Use **Bumpers or Cushioned Cylinder**

Shaded shock absorption ranges of horizontal payload (W) @ 80psi, flow controls fully open. For vertical applications do not exceed 1/2 of the recommended payload due to the additional acceleration effect of gravity.

Dimensions and technical information are subject to change without notice

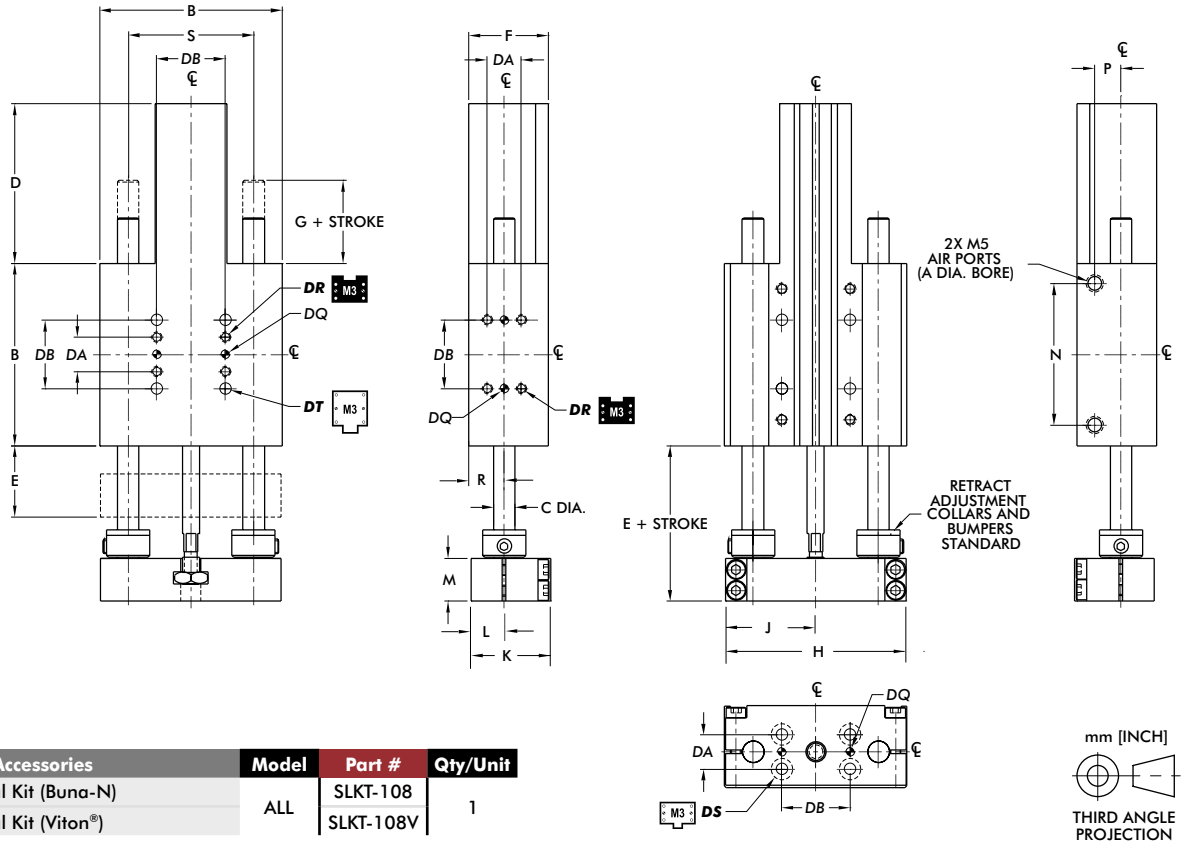

Pneumatic Accessories	Model	Part #	Qty/Unit
Cylinder Seal Kit (Buna-N)	ALL	SLKT-108	1
Cylinder Seal Kit (Viton®)		SLKT-108V	

mm [INCH]

THIRD ANGLE PROJECTION

DIRECTCONNECT™ Mounting Pattern Dimensions (all sizes)					
DA	DB	DQ	DR	DS	DT
9.5 [0.375]	19.1 [0.750]	3H7 x 2 DP	M3 x 6 DP	CLR & C'BORE FOR M3	CLR & C'BORE FOR M3

Model	Bore Ø	Body Size	Shaft Ø	Basic Unit Dimensions												
	A	B	C	D	E	F	G	H	J	K	L	M	N	P	R	S
DLT-06M	14 [0.563]	50.8 [2.00]	6.0 [0.236]	44.4 [1.75]	19.9 [0.783]	22.4 [0.88]	16.8 [0.66]	50.3 [1.980]	25.1 [0.990]	22.2 [0.875]	9.3 [0.365]	11.9 [0.470]	39.4 [1.55]	5.4 [0.21]	9.9 [0.390]	34.93 [1.375]
DLT-08M		63.5 [2.50]	8.0 [0.315]				10.4 [0.41]	62.7 [2.470]	31.0 [1.235]				52.1 [2.05]			44.45 [1.750]

Dimensions in mm [in]

Loading Information

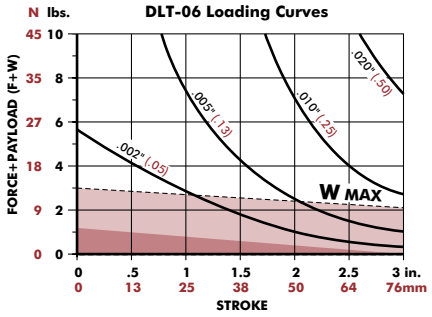

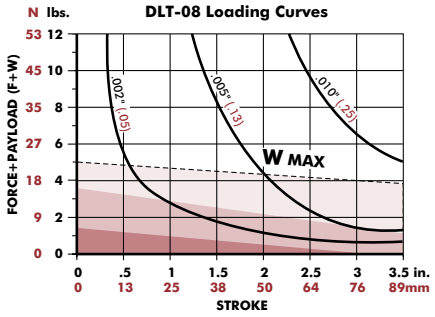

F=Externally applied force
W=Weight of payload
F+W=Total force
M=Maximum moment (in-lb. or N-m)

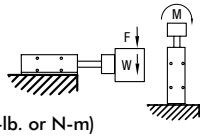

Shock Absorbers and Flow Controls are recommended for all applications

Use **Double Shocks** in both directions | Use **Single Shock** in both directions | Use **Bumpers or Cushioned Cylinder**

Shaded shock absorption ranges of horizontal payload (W) @ 80psi, flow controls fully open. For vertical applications do not exceed 1/2 of the recommended payload due to the additional acceleration effect of gravity.

DLT-10/12/16M-B

Internal Air Cylinder Linear Thruster Slides | Dimensions and Technical Specifications

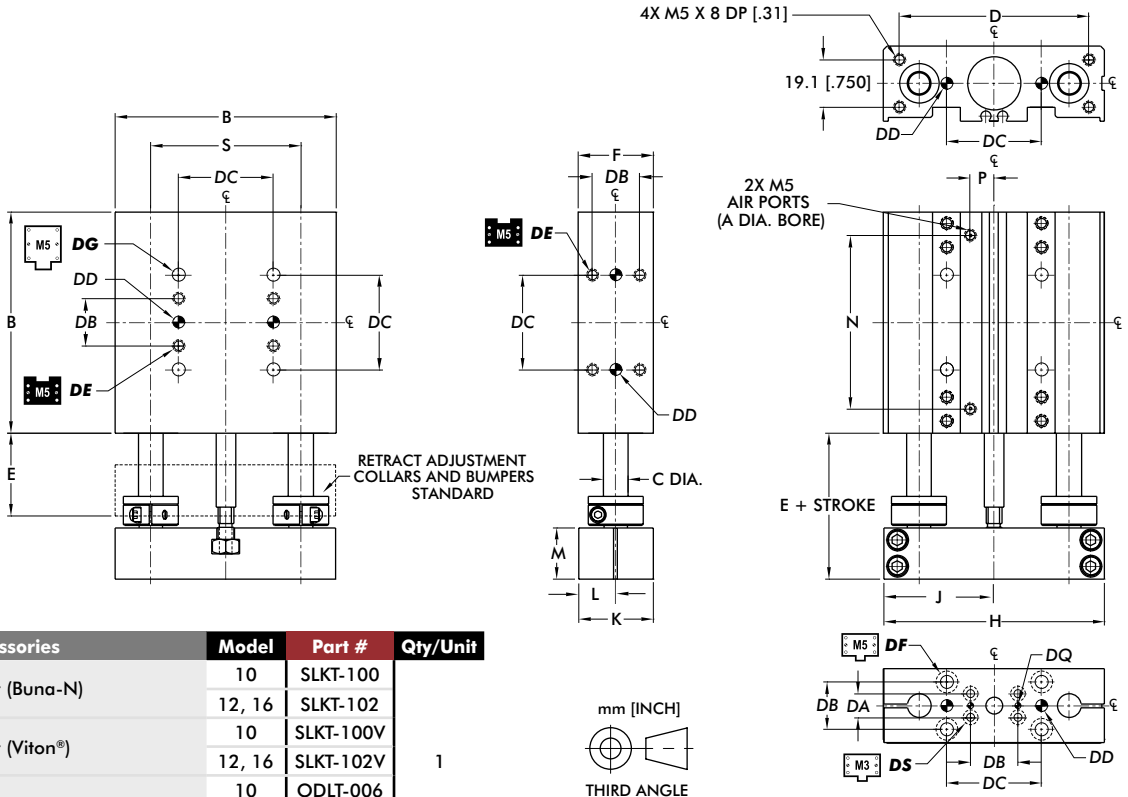

Pneumatic Accessories	Model	Part #	Qty/Unit
Cylinder Seal Kit (Buna-N)	10	SLKT-100	1
	12, 16	SLKT-102	
Cylinder Seal Kit (Viton®)	10	SLKT-100V	
	12, 16	SLKT-102V	
Base Flange Kit (See page GR-LIN-36 for information)	10	ODLT-006	
	12	ODLT-008	
	16	ODLT-010	

DIRECTCONNECT™ Mounting Pattern Dimensions (all sizes)

DA	DB	DC	DD	DE	DF	DG	DQ	DS
9.5 [0.375]	19.1 [0.750]	38.1 [1.500]	5mm H7 x 6 DP	M5 x 8.5 DP	CLEARANCE FOR M5		3H7 x 2 DP	CLR & C'BORE FOR M3

Model	Bore Ø	Body Size	Shaft Ø	Basic Unit Dimensions									
	A	B	C	D	E	F	H	J	K	L	M	N	P	S
DLB-10	19 [0.75]	88.9 [3.50]	9.5 [0.375]	76.2 [3.000]	33.4 [1.313]	30.2 [1.19]	88.6 [3.490]	44.2 [1.740]	29.9 [1.178]	14.8 [0.584]	20.7 [0.813]	69.7 [2.75]	9.4 [0.37]	60.33 [2.375]
DLB-12	25 [0.98]	101.6 [4.00]	12.0 [0.472]	92.1 [3.625]		41.4 [1.63]	101.2 [3.985]	50.4 [1.985]	41.0 [1.615]	20.4 [0.802]		83.3 [3.28]		69.85 [2.750]
DLB-16		120.7 [4.75]	16.0 [0.630]	111.1 [4.375]	34.9 [1.375]		120.3 [4.735]	59.9 [2.360]				102.4 [4.03]		82.55 [3.250]

Dimensions in mm [in]

Loading Information

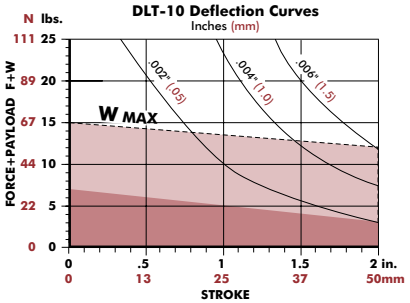

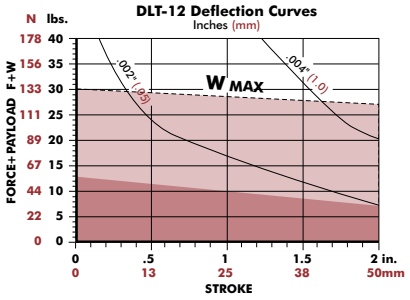

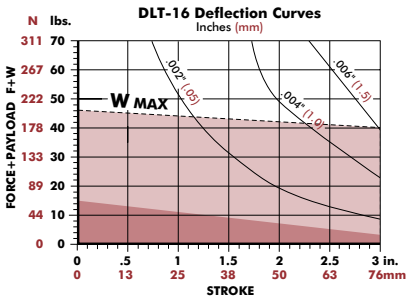

F=Externally applied force
W=Weight of payload
F+W=Total force
M=Maximum moment (in-lb. or N-m)

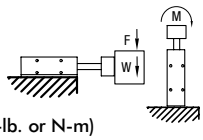

Shock Absorbers and Flow Controls are recommended for all applications

(W) in this range use **Single Shock** in retract directions

(W) in this range use **Bumpers or Cushioned Cylinder**

Shaded shock absorption ranges of horizontal payload (W) @ 80psi, flow controls fully open. For vertical applications do not exceed 1/2 of the recommended payload due to the additional acceleration effect of gravity.

DLT-10/12/16M-E

Internal Air Cylinder Linear Thruster Slides | Dimensions and Technical Specifications

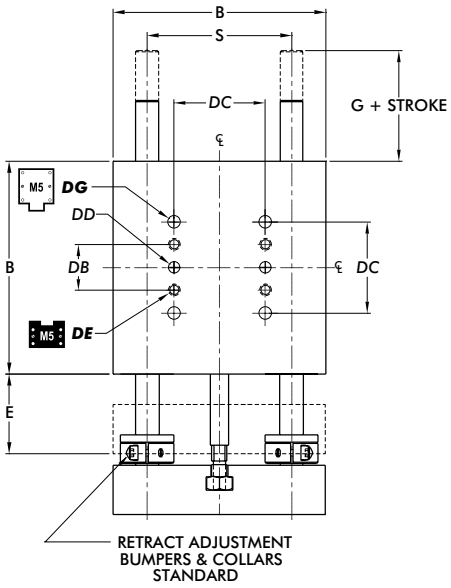

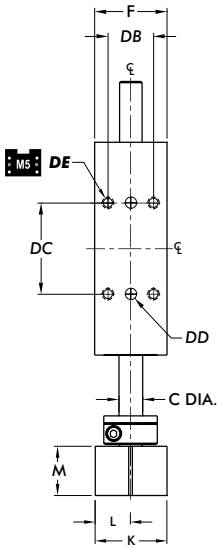

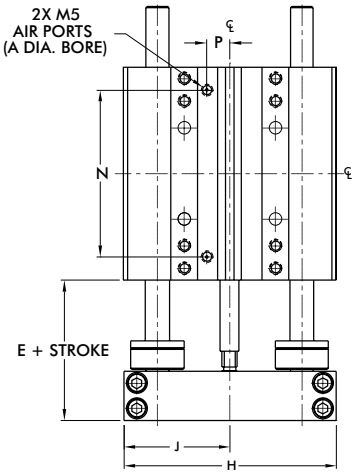

Pneumatic Accessories	Model	Part #	Qty/Unit
Cylinder Seal Kit (Buna-N)	10	SLKT-100	1
	12, 16	SLKT-102	
Cylinder Seal Kit (Viton®)	10	SLKT-100V	
	12, 16	SLKT-102V	

mm [INCH]

THIRD ANGLE PROJECTION

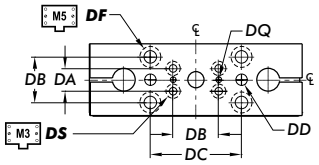

DIRECTCONNECT™ Mounting Pattern Dimensions (all sizes)								
DA	DB	DC	DD	DE	DF	DG	DQ	DS
9.5 [0.375]	19.1 [0.750]	38.1 [1.500]	5mm H7 x 6 DP	M5 x 8.5 DP	CLEARANCE FOR M5		3H7 x 2 DP	CLR & C'BORE FOR M3

Model	Bore Ø	Body Size	Shaft Ø	Basic Unit Dimensions										
	A	B	C	E	F	G	H	J	K	L	M	N	P	S
DLB-10	19 [3/4]	88.9 [3.50]	9.5 [0.375]	33.4 [1.313]	30.2 [1.19]	20.8 [0.82]	88.6 [3.490]	44.2 [1.740]	29.9 [1.178]	14.8 [0.584]	20.7 [0.813]	69.7 [2.75]	9.4 [0.37]	60.33 [2.375]
DLB-12	25 [1]	101.6 [4.00]	12.0 [0.472]		41.4 [1.63]		101.2 [3.985]	50.4 [1.985]	41.0 [1.615]	20.4 [0.802]		83.3 [3.28]		69.85 [2.750]
DLB-16		120.7 [4.75]	16.0 [0.630]	34.9 [1.375]		19.3 [0.76]	120.3 [4.735]	59.9 [2.360]				102.4 [4.03]		82.55 [3.250]

Dimensions in mm [in]

Loading Information

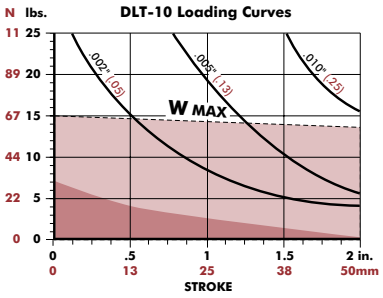

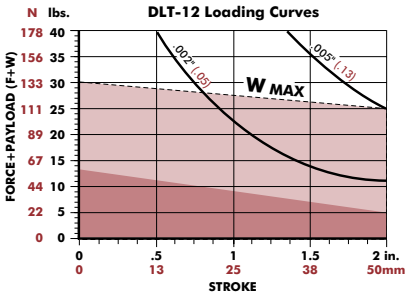

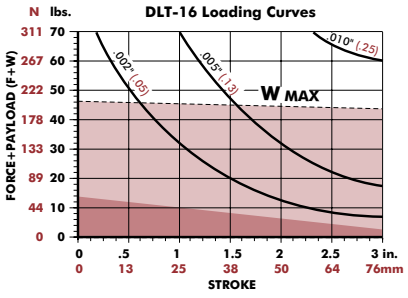

F=Externally applied force
W=Weight of payload
F+W=Total force
M=Maximum moment (in-lb. or N-m)

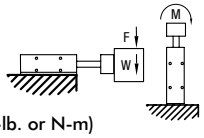

Shock Absorbers and Flow Controls are recommended for all applications

(**W**) in this range use **Single Shock** in retract directions

(**W**) in this range use **Bumpers or Cushioned Cylinder**

Shaded shock absorption ranges of horizontal payload (W) @ 80psi, flow controls fully open. For vertical applications do not exceed 1/2 of the recommended payload due to the additional acceleration effect of gravity.

DLT-10/12/16M-L

M3 M5 M5 M5 DIRECTCONNECT™

Internal Air Cylinder Linear Thruster Slides | Dimensions and Technical Specifications

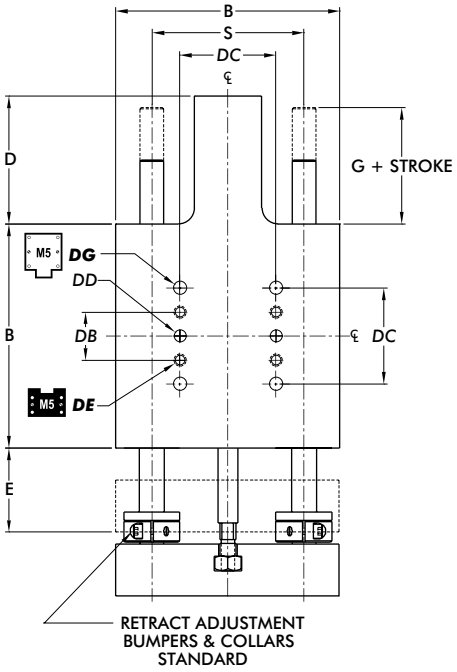

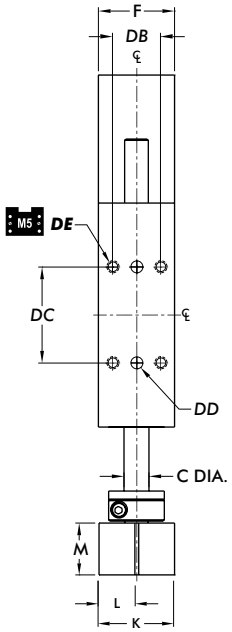

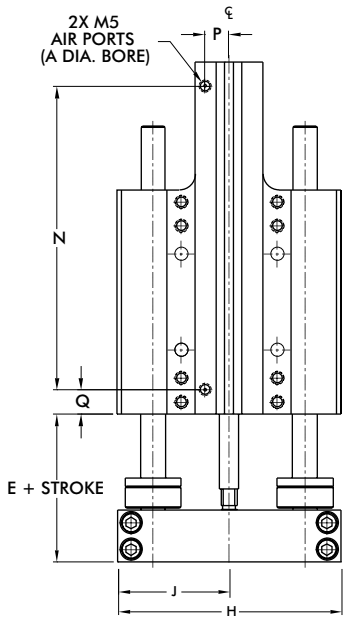

Pneumatic Accessories	Model	Part #	Qty/Unit
Cylinder Seal Kit (Buna-N)	10	SLKT-100	1
	12, 16	SLKT-102	
Cylinder Seal Kit (Viton®)	10	SLKT-100V	
	12, 16	SLKT-102V	

mm [INCH]

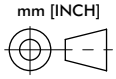

THIRD ANGLE PROJECTION

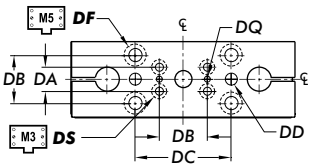

DIRECTCONNECT™ Mounting Pattern Dimensions (all sizes)								
DA	DB	DC	DD	DE	DF	DG	DQ	DS
9.5 [0.375]	19.1 [0.750]	38.1 [1.500]	5mm H7 x 6 DP	M5 x 8.5 DP	CLEARANCE FOR M5		3H7 x 2 DP	CLR & C'BORE FOR M3

Model	Bore Ø	Body Size	Shaft Ø	Basic Unit Dimensions												
	A	B	C	D	E	F	G	H	J	K	L	M	N	P	Q	S
DLB-10	19 [3/4]	88.9 [3.50]	9.5 [0.375]	50.8 [2.00]	33.4 [1.313]	30.2 [1.19]	20.8 [0.82]	88.6 [3.490]	44.2 [1.740]	29.9 [1.178]	14.8 [0.584]	20.7 [0.813]	120.7 [4.75]	9.6 [0.38]	9.6 [0.38]	60.33 [2.375]
DLB-12	25 [1]	101.6 [4.00]	12.0 [0.472]	63.5 [2.50]		41.4 [1.63]	19.3 [0.76]	101.2 [3.985]	50.4 [1.985]	41.0 [1.615]	20.4 [0.802]		146.8 [5.78]	9.4 [0.37]	9.1 [0.36]	69.85 [2.750]
DLB-16		120.7 [4.75]	16.0 [0.630]	69.9 [2.75]	34.9 [1.375]			120.3 [4.735]	59.9 [2.360]				172.2 [6.78]			82.55 [3.250]

Dimensions in mm [in]

Loading Information

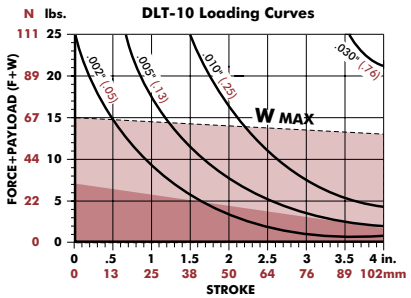

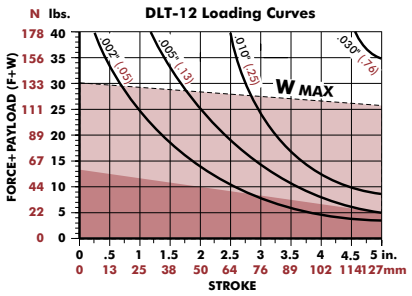

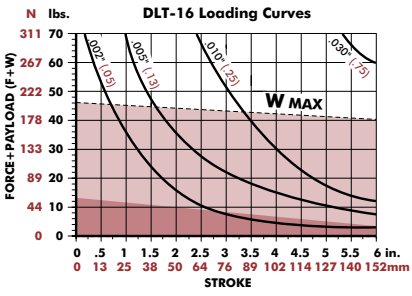

F=Externally applied force
W=Weight of payload
F+W=Total force
M=Maximum moment (in-lb. or N-m)

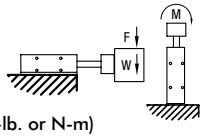

Shock Absorbers and Flow Controls are recommended for all applications

(W) in this range use **Single Shock** in retract directions

(W) in this range use **Bumpers or Cushioned Cylinder**

Shaded shock absorption ranges of horizontal payload (W) @ 80psi, flow controls fully open. For vertical applications do not exceed 1/2 of the recommended payload due to the additional acceleration effect of gravity.

Internal Air Cylinder Linear Thruster Slides | Dimensions and Technical Specifications

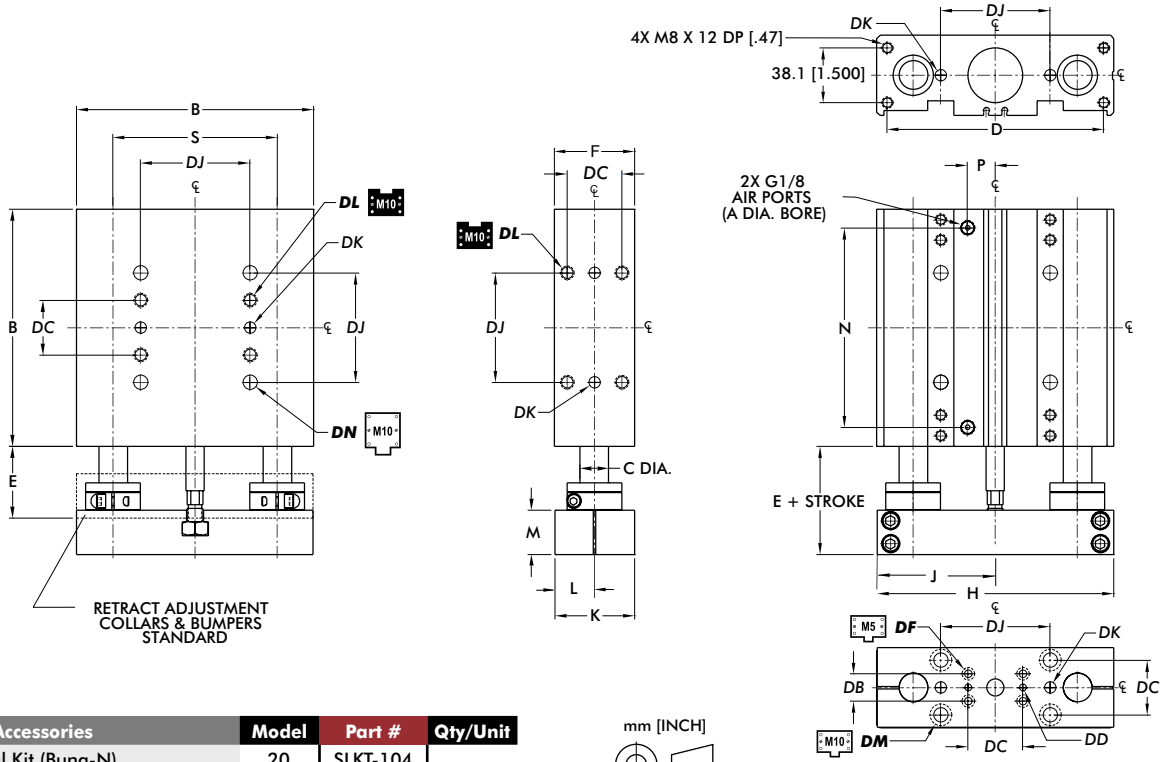

Pneumatic Accessories	Model	Part #	Qty/Unit
Cylinder Seal Kit (Buna-N)	20	SLKT-104	1
Cylinder Seal Kit (Viton®)	25	SLKT-104V	
Base Flange Kit (See page GR-LIN-36 for information)	20	ODLT-012	
	25	ODLT-014	

mm [INCH]

THIRD ANGLE PROJECTION

DIRECTCONNECT™ Mounting Pattern Dimensions (all sizes)							
DB	DC	DD	DF	DJ	DK	DL	DM DN
19.1 [0.750]	38.1 [1.500]	5mm H7 x 6 DP	CLEARANCE FOR M5	76.2 [3.000]	8mm H7 x 9.4 DP	M10 x 14.2 DP	CLR & C'BORE FOR M10

Model	Bore Ø	Body Size	Shaft Ø	Basic Unit Dimensions										
	A	B	C	D	E	F	H	J	K	L	M	N	P	S
DLB-20	38 [1 1/2]	165.1 [6.50]	20 [0.787]	150.8 [5.938]	49.8 [1.960]	55.9 [2.20]	164.6 [6.480]	82.0 [3.230]	55.4 [2.180]	27.4 [1.080]	30.7 [1.210]	138.9 [5.47]	19.5 [0.77]	114.30 [4.500]
DLB-25		190.5 [7.50]	25 [0.984]	176.2 [6.938]	55.1 [2.170]		190.0 [7.480]	94.7 [3.730]			36.1 [1.420]	164.3 [6.47]		133.35 [5.250]

Dimensions in mm [in]

Loading Information

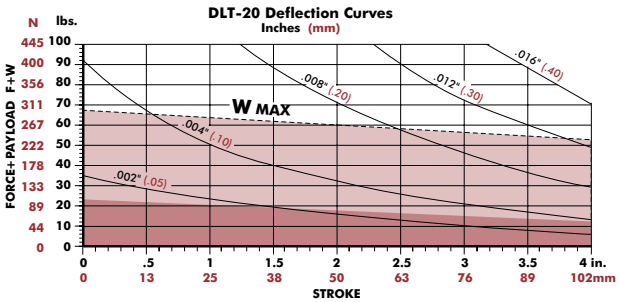

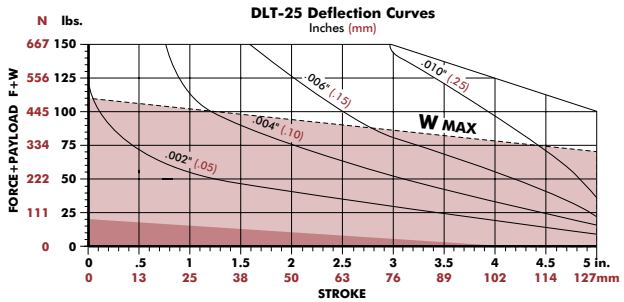

F=Externally applied force
W=Weight of payload
F+W=Total force
M=Maximum moment (in-lb. or N-m)

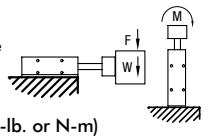

Shock Absorbers and Flow Controls are recommended for all applications

(**W**) in this range use **Single Shock** in retract directions

(**W**) in this range use **Bumpers or Cushioned Cylinder**

Shaded shock absorption ranges of horizontal payload (W) @ 80psi, flow controls fully open. For vertical applications do not exceed 1/2 of the recommended payload due to the additional acceleration effect of gravity.

DLT-20/25M-E

M5 M10 M10 M10 DIRECTCONNECT™

Internal Air Cylinder Linear Thruster Slides | Dimensions and Technical Specifications

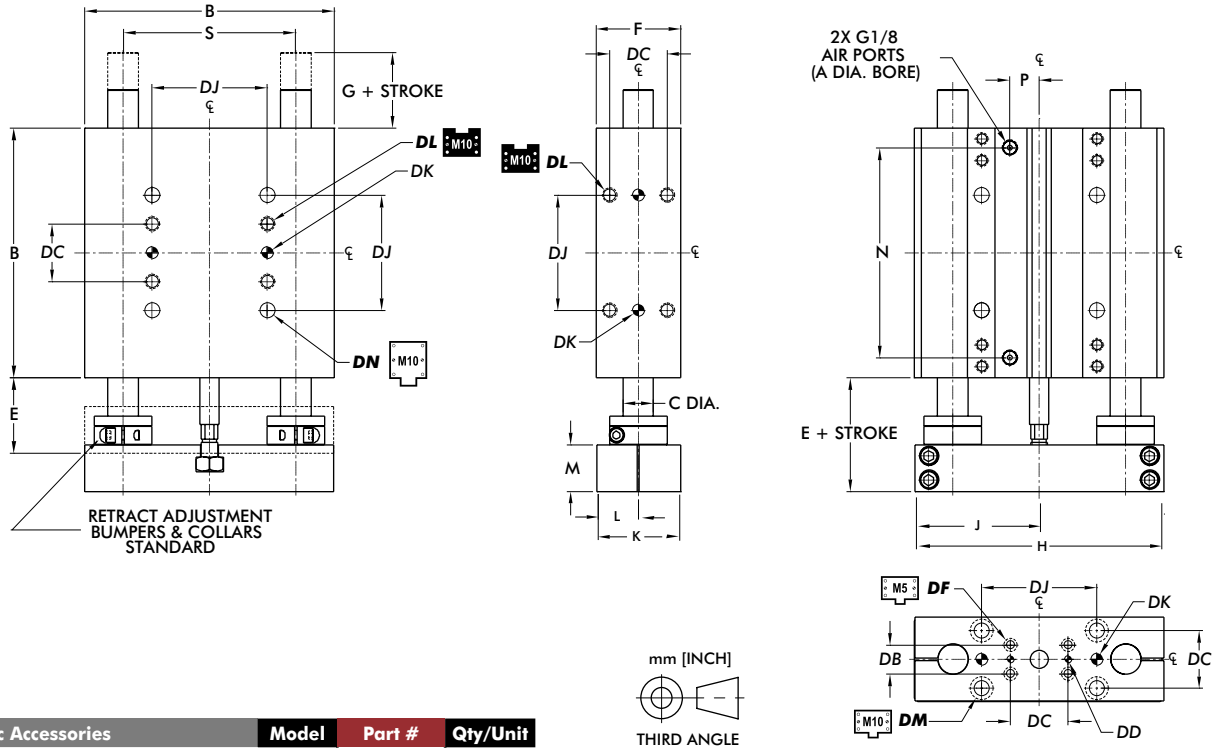

mm [INCH]

THIRD ANGLE PROJECTION

Pneumatic Accessories	Model	Part #	Qty/Unit
Cylinder Seal Kit (Buna-N)	20	SLKT-104	1
Cylinder Seal Kit (Viton®)	25	SLKT-104V	

DIRECTCONNECT™ Mounting Pattern Dimensions (all sizes)

DB	DC	DD	DF	DJ	DK	DL	DM	DN
19.1 [0.750]	38.1 [1.500]	5mm H7 x 6 DP	CLEARANCE FOR M5	76.2 [3.000]	8mm H7 x 9.4 DP	M10 x 14.2 DP	CLR & C'BORE FOR M10	

Model	Bore Ø	Body Size	Shaft Ø	Basic Unit Dimensions									
	A	B	C	E	F	G	H	J	K	L	M	N	P	S
DLT-20	38 [1 1/2]	165.1 [6.50]	20 [0.787]	49.8 [1.960]	55.9 [2.20]	24.4 [0.960]	164.6 [6.480]	82.0 [3.230]	55.4 [2.180]	27.4 [1.080]	30.7 [1.210]	138.9 [5.47]	19.5 [0.77]	114.30 [4.300]
DLT-25		190.5 [7.50]	25 [0.984]	55.1 [2.170]		29.7 [1.170]	190.0 [7.480]	94.7 [3.730]			36.1 [1.420]	164.3 [6.47]		133.35 [5.250]

Dimensions in mm [in]

Loading Information

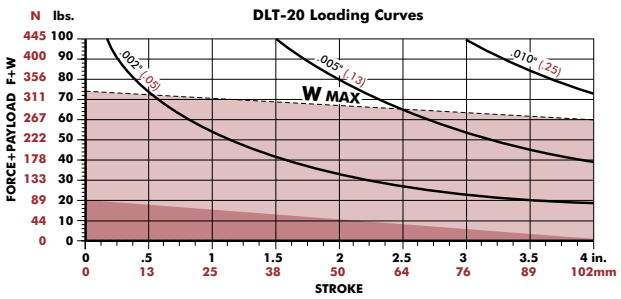

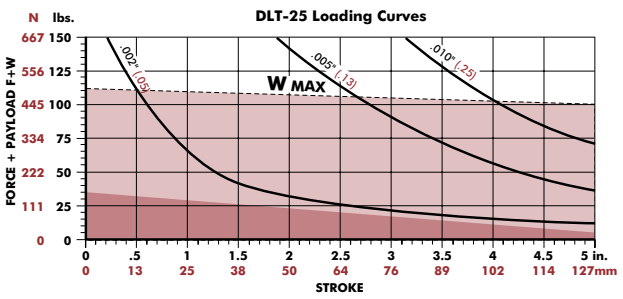

F=Externally applied force
W=Weight of payload
F+W=Total force
M=Maximum moment (in-lb. or N-m)

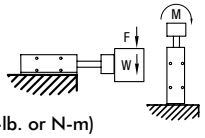

Shock Absorbers and Flow Controls are recommended for all applications

(**W**) in this range use **Single Shock** in retract directions

(**W**) in this range use **Bumpers or Cushioned Cylinder**

Shaded shock absorption ranges of horizontal payload (W) @ 80psi, flow controls fully open. For vertical applications do not exceed 1/2 of the recommended payload due to the additional acceleration effect of gravity.

Dimensions and technical information are subject to change without notice

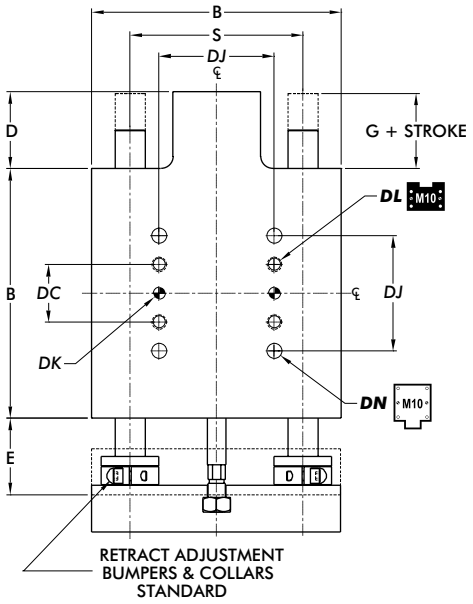

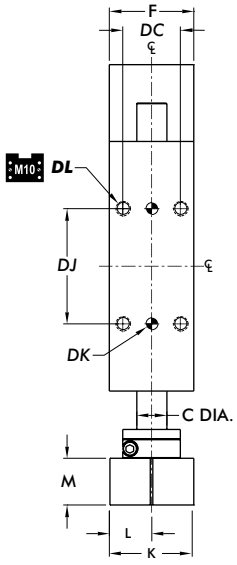

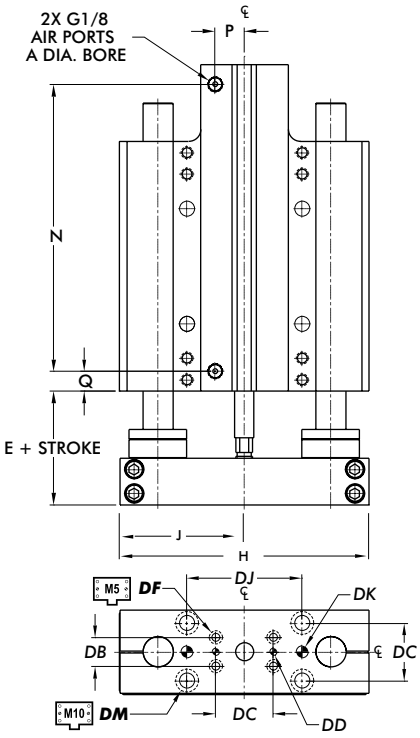

mm [INCH]

THIRD ANGLE PROJECTION

Pneumatic Accessories	Model	Part #	Qty/Unit
Cylinder Seal Kit (Buna-N)	20	SLKT-104	1
Cylinder Seal Kit (Viton®)	25	SLKT-104V	

DIRECTCONNECT™ Mounting Pattern Dimensions (all sizes)							
DB	DC	DD	DF	DJ	DK	DL	DM	DN
19.1 [0.750]	38.1 [1.500]	5mm H7 x 6 DP	CLEARANCE FOR M5	76.2 [3.000]	8mm H7 x 9.4 DP	M10 x 14.2 DP	CLR & C'BORE FOR M10	

Model	Bore Ø	Body Size	Shaft Ø	Basic Unit Dimensions												
	A	B	C	D	E	F	G	H	J	K	L	M	N	P	Q	S
DLT-20	38 [1 1/2]	165.1 [6.50]	20 [0.787]	50.8 [2.00]	49.8 [1.960]	55.9 [2.20]	24.4 [0.960]	164.6 [6.480]	82.0 [3.230]	55.4 [2.180]	27.4 [1.080]	30.7 [1.210]	189.7 [7.469]	19.4 [0.77]	13.1 [0.52]	114.30 [4.500]
DLT-25		190.5 [7.50]	25 [0.984]		55.1 [2.170]		29.7 [1.170]	190.0 [7.480]	94.7 [3.730]			36.1 [1.420]	215.1 [8.468]			133.35 [5.250]

Dimensions in mm [in]

Loading Information

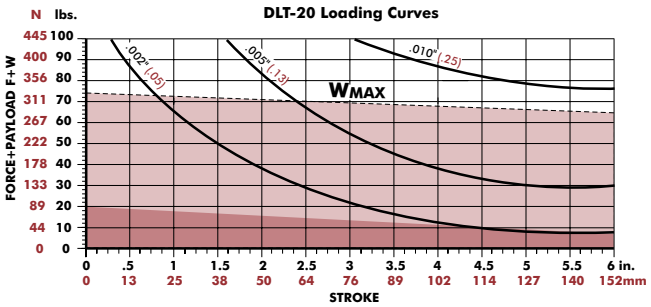

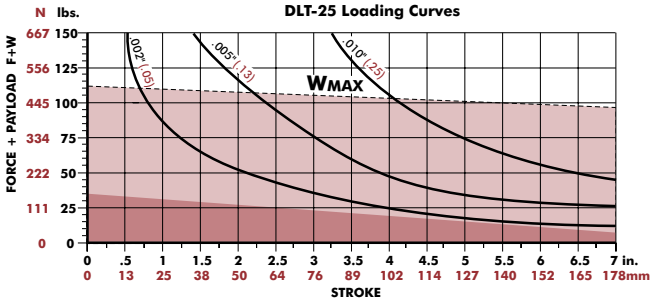

F=Externally applied force
W=Weight of payload
F+W=Total force
M=Maximum moment (in-lb. or N-m)

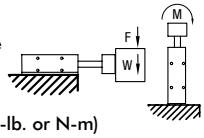

Shock Absorbers and Flow Controls are recommended for all applications

(**W**) in this range use **Single Shock** in retract directions

(**W**) in this range use **Bumpers or Cushioned Cylinder**

Shaded shock absorption ranges of horizontal payload (W) @ 80psi, flow controls fully open. For vertical applications do not exceed 1/2 of the recommended payload due to the additional acceleration effect of gravity.

DLT SERIES - EXTERNAL AIR CYLINDER

External Air Cylinder Linear Thruster Slides | Features and Benefits | How To Order

Features:

- Bearing system for smooth operation
- Rugged design produces very reliable long life operation
- Replaceable air cylinder with adjustable cushions
- Urethane bumpers, hardened pads, oil wick
- Optional telescopic airlines transfers air to tooling
- DIRECTCONNECT™ mounting pattern
- Corrosion resistant shafting for corrosive environments
- Position sensing using inductive or magneto resistive sensors

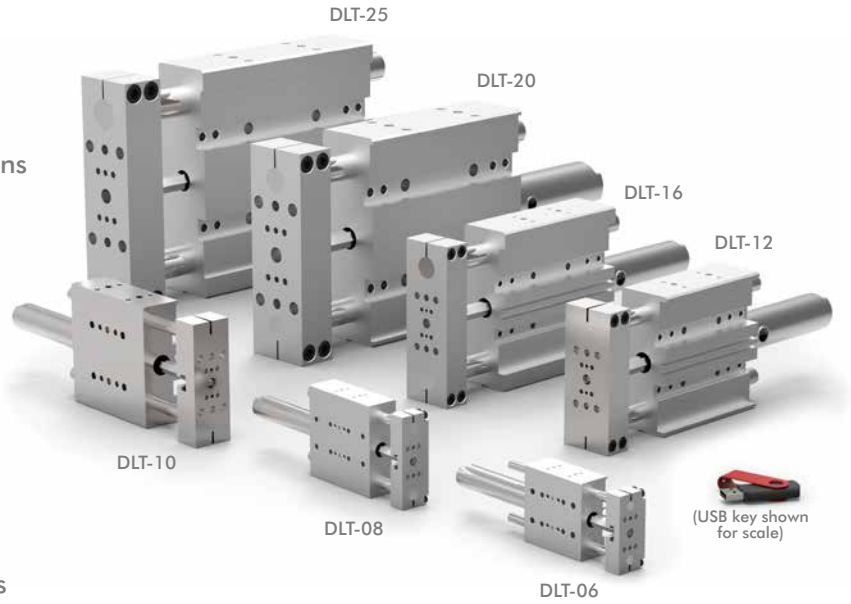

Applications:

- Machining and automation applications
- Harsh environment pick-and-place applications
- X Y Table Applications

How To Order

Cylinder Compatability

Size	Imperial	Metric
06	T	T
08	T	T
10	T, A, N	A
12	T, A, N	A
16	T, A, N	A
20	T, A, N	N
25	T, A, N	N

Base Model
DLT

Style* Description
- **T** Replaceable cylinder w/o adjustable air cushions
- **A** Replaceable cylinder with adjustable air cushions
- **N** Repairable NFPA/VDMA cylinder w/adjustable air cushions

*See chart to the left for cylinder compatability.

Bearing Description
- **B** Linear Ball Bearings*
- **C** Composite Bushings

*Not available on -06 or -08

Shafting Description
- "Blank" Precision Hardened
- **S** Corrosion Resistant

Unit Type Description
- "Blank" Imperial
- **M** Metric

Size	Style	Stroke* Imperial (in)
DLT-06	T	**.5, 1,1.5, 2, 2.5, 3, 4, 5, 6**
DLT-08	T	**.5, 1,1.5, 2, 2.5, 3, 4, 5, 6, 7, 8**
DLT-10	T, A, N	**1-12** @ 1" increments
DLT-12	T, A, N	**1-16** @ 1" increments
DLT-16	T, A, N	**1-20** @ 1" increments
DLT-20	T, A, N	**1-24** @ 1" increments
DLT-25	T, A, N	**1-26** @ 1" increments

Size	Style	Stroke* Metric (mm)
DLT-06M	T	**10, 25, 40, 50, 75, 100, 125, 160**
DLT-08M	T	**10, 25, 40, 50, 75, 100, 125, 160, 175, 200**
DLT-10M	A	**25, 50, 80, 100, 125, 160, 200, 250, 300**
DLT-12M	A	**25, 50, 80, 100, 125, 160, 200, 250, 300, 320, 360, 400**
DLT-16M	A	**25, 50, 80, 100, 125, 160, 200, 250, 300, 320, 360, 400, 500**
DLT-20M	N	**25, 50, 80, 100, 125, 160, 200, 250, 300, 320, 360, 400, 500**
DLT-25M	N	**25, 50, 80, 100, 125, 160, 200, 250, 300, 320, 360, 400, 500**

*Custom strokes available. Consult factory.

Dimensions and technical information are subject to change without notice

DLT SERIES - EXTERNAL AIR CYLINDER

External Air Cylinder Linear Thruster Slides | Accessories

Shock/Stop & Mounting Accessories	Model Numbers	Style	Part Number	Qty/Unit
Universal Mounting Kit (Stop/Shock)	06	All	OSAK-069	1-4
	08		OSAK-070	
Universal Mounting Kit (Stop/Shock/Sensor)	10		OSAK-055	
	12		OSAK-057	
	16		OSAK-059	
	20		OSAK-061	
	25		OSAK-063	
Shock Absorber (2 Max on **-06**)	06, 08		SHOK-030	
	10		SHOK-028	
	12, 16,		SHOK-010	
	20, 25		SHOK-029	
Adjustable Hard Stop	06, 08		DLT-0623	
	10, 12, 16, 20, 25		DLT-1023	
Urethane Bumper/Stop Collar Kit	06		OSAK-067	1-2
	08		OSAK-068	
	10		OSAK-065	
	12		OSAK-066	
	16		OSAK-060	
	20		OSAK-062	
	25		OSAK-064	

Sensor Accessories	Model Numbers	Style	Part Number	Qty/Unit
Inductive Sensor Mounting Kit	06	**T**	OSMK-076	1
Inductive Sensor Mounting Kit	08		OSMK-077	
PNP Inductive Sensor with Quick Disconnect*	06, 08	**T**	OISP-014	
NPN Inductive Sensor with Quick Disconnect*			OISN-014	
PNP Inductive Sensor with Quick Disconnect*	10, 12, 16, 20, 25	**T, A, N**	OISP-011	1-2
NPN Inductive Sensor with Quick Disconnect*			OISN-011	
PNP Magneto Resistive Sensor w/Qk Disconnect*	06, 08, 10, 12, 16	**T, A, N**	OHSP-005	
NPN Magneto Resistive Sensor w/Qk Disconnect*			OHSN-005	
PNP Magneto Resistive Sensor w/Qk Disconnect*	20, 25	**N**	OHSP-020	
NPN Magneto Resistive Sensor w/Qk Disconnect*			OHSN-020	
Quick Disconnect 2 Meter Cable Length*	All Model	All	CABL-010	
Quick Disconnect 5 Meter Cable Length*			CABL-013	
Cable Extension Cord 1M Length*	All Models	All	CABL-015	
Cable Extension Cord 2M Length*			CABL-016	

Pneumatic Accessories	Model Numbers	Style	Part Number	Qty/Unit
1/8 NPT Telescopic Airlines (up to 6")	10, 12, 16	All	OTAL-039	1-4
1/8 NPT Telescopic Airlines (up to 12")	10, 12, 16		OTAL-040	
1/8 NPT Telescopic Airlines (up to 18")	10, 12, 16, 20, 25		OTAL-041	
1/8 NPT Telescopic Airlines (up to 24")	20, 25		OTAL-042	
#10-32 NPT Adjustable Flow Control	06, 08		VLVF-007	1-2
1/8 NPT Adjustable Flow Control	10, 12, 16, 20, 25		VLVF-004	
G1/8 Telescopic Airlines (up to 160mm)	10, 12, 16		OTAL-045	1-4
G1/8 Telescopic Airlines (up to 300mm)	10, 12, 16		OTAL-046	
G1/8 Telescopic Airlines (up to 450mm)	10, 12, 16, 20, 25		OTAL-047	
G1/8 Telescopic Airlines (up to 600mm)	20, 25		OTAL-048	
M5 Adjustable Flow Control	06, 08		VLVF-008	1-2
G1/8 Adjustable Flow Control	10, 12, 16, 20, 25		VLVF-005	

*Sensor and cable sold separately.

See page GR-LIN-36 for Accessory Mounting Technical Data

DLT SERIES - EXTERNAL AIR CYLINDER

External Air Cylinder Linear Thruster Slides | Technical Specifications

Specifications	Units	06	08	10	12	16	20	25
Max. Air Pressure	bar [psi]	7 [100]						
Thrust Force @ 5.5 bar [80psi]	N [lbs]	111 [20]	89 [20]	173 [35]	270 [70]	270 [70]	443 [140]	443 [140]
Weight (basic unit)	kg [lb]	0.24 [0.53]	0.40 [0.88]	1.05 [2.12]	1.64 [3.42]	2.11 [4.47]	6.3 [14.3]	8.5 [19.2]
Additional Weight per Stroke	g/mm [lbs/in]	0.88 [0.05]	1.43 [0.07]	1.2 [0.09]	2.9 [0.15]	4.2 [0.23]	7.9 [0.53]	10.7 [0.68]
Cylinder Bore Ø	mm [in]	16 [0.563]		20 [0.787]	25 [0.984]		32 [1.26]	
Shaft Ø	mm [in]	6 [0.236]	8 [0.315]	9.5 [0.375]	12 [0.472]	16 [0.630]	20 [0.787]	25 [0.984]
Max (**M**) Vertical Motion	Nm [in-lbs]	0.6 [5]	1.3 [10]	--	--	--	--	--

Dimensions and technical information are subject to change without notice

External Air Cylinder Linear Thruster Slides | Dimensions and Technical Specifications

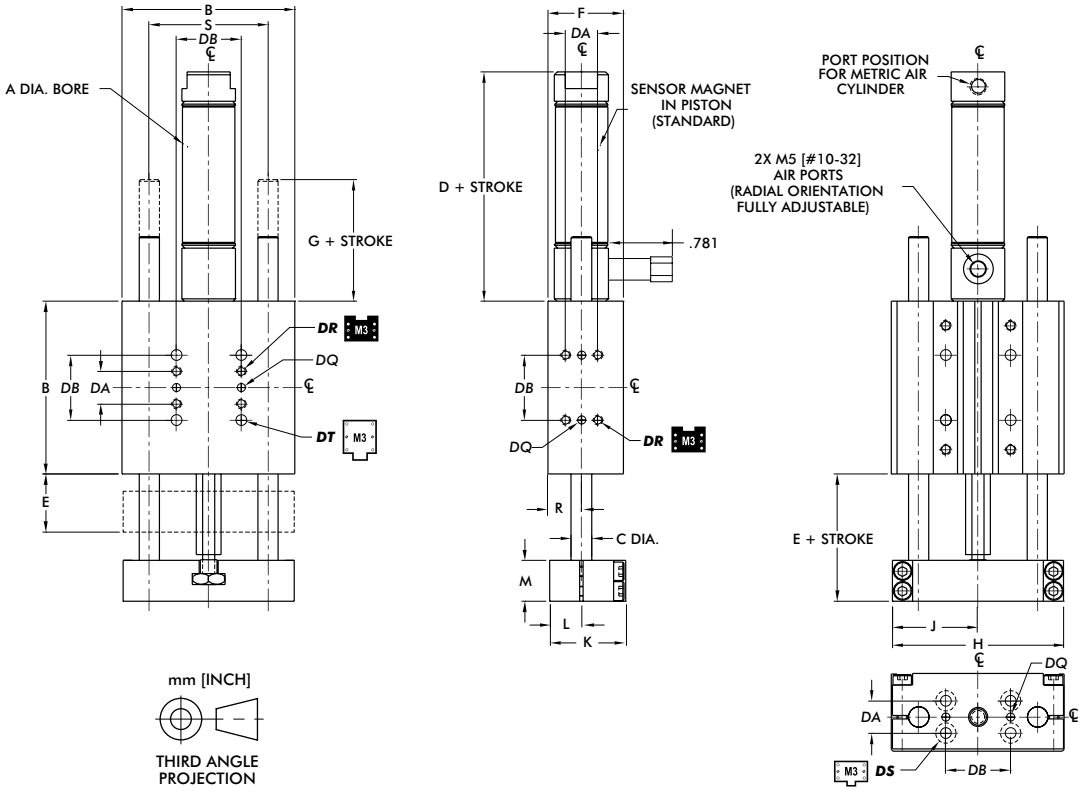

DIRECTCONNECT™ Mounting Pattern Dimensions (all sizes)					
DA	DB	DQ	DR	DS	DT
9.5 [0.375]	19.1 [0.750]	3H7 x 2 DP [0.0940 x 0.078 DP]	M3 x 6 DP [#4-40 x 0.25 DP]	CLR & C'BORE FOR M3 [CLR & C'BORE FOR #4]	CLR & C'BORE FOR M3 [CLR & C'BORE FOR #4]

Model	Bore Ø	Body Size	Shaft Ø	Basic Unit Dimensions										
	A	B	C	D	E	F	G	H	J	K	L	M	R	S
DLT-06	16 [0.63]	50.8 [2.00]	6.0 [0.236]	54.9 [2.16]	19.9 [0.783]	22.4 [0.88]	16.7 [0.66]	50.3 [1.980]	25.1 [0.990]	22.2 [0.875]	9.3 [0.365]	11.9 [0.470]	9.9 [0.390]	34.93 [1.375]
DLT-08		63.5 [2.50]	8.0 [0.315]				10.4 [0.41]	62.7 [2.470]	31.4 [1.235]					44.45 [1.750]

Dimensions in mm [in]

Loading Information

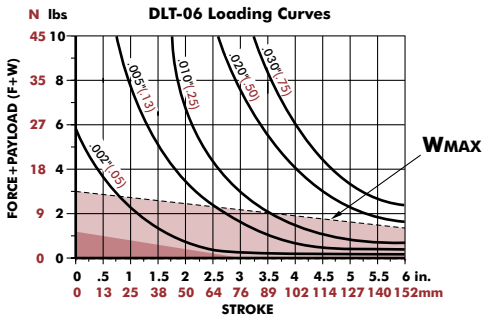

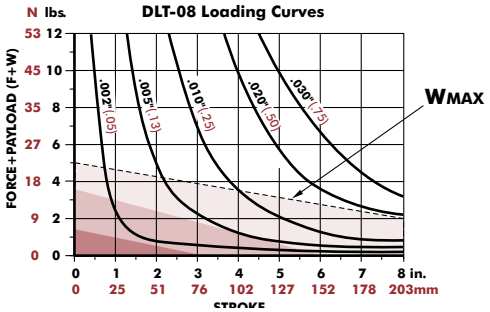

F=Externally applied force
W=Weight of payload
F+W=Total force
M=Maximum moment (in-lb. or N-m)

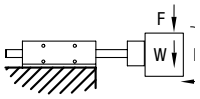

Shock Absorbers and Flow Controls are recommended for all applications

Use **Double Shocks** in both directions | Use **Single Shock** in both directions | Use **Bumpers or Cushioned Cylinder**

Shaded shock absorption ranges of horizontal payload (W) @ 80psi, flow controls fully open. For vertical applications do not exceed 1/2 of the recommended payload due to the additional acceleration effect of gravity.

DLT-10/12/16-T, A

M3 M5 M5 M5 DIRECTCONNECT™

External Air Cylinder Linear Thruster Slides | Dimensions and Technical Specifications

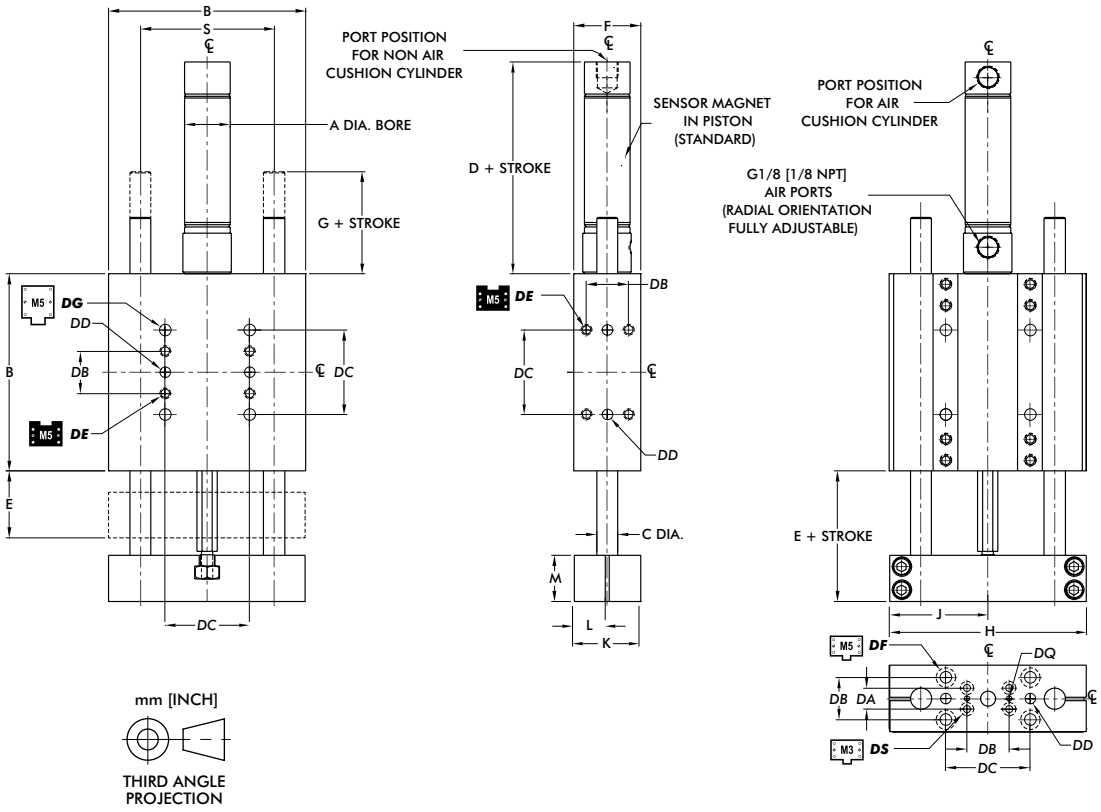

DIRECTCONNECT™ Mounting Pattern Dimensions (all sizes)							
DA	DB	DC	DD	DE	DF	DG	DQ	DS
9.5 [0.375]	19.1 [0.750]	38.1 [1.500]	5mm H7 x 6 DP [0.1880 x 0.25 DP]	M5 x 8.5 DP [#10-32 x 0.34 DP]	CLR & C'BORE FOR M5 [CLR & C'BORE FOR #10]		3H7 x 2 DP [0.0940 x 0.078 DP]	CLR & C'BORE FOR M3 [CLR & C'BORE FOR #4]

Model	Bore Ø	Body Size	Shaft Ø	Basic Unit Dimensions									
	A	B	C	D	E	F	G	H	J	K	L	M	S
DLB-10	20 [3/4]	88.9 [3.50]	9.5 [0.375]	88.0 [2.91]	33.4 [1.313]	30.2 [1.19]	20.8 [0.82]	88.6 [3.490]	44.2 [1.740]	29.9 [1.178]	14.8 [0.584]	20.7 [0.813]	60.33 [2.375]
DLB-12	25 [1 1/16]	101.6 [4.00]	12.0 [0.472]	91.5 [2.88]		41.4 [1.63]		101.2 [3.985]	50.4 [1.985]	41.0 [1.615]	20.4 [0.802]		69.85 [2.750]
DLB-16		120.7 [4.75]	16.0 [0.630]		34.9 [1.375]		19.3 [0.76]	120.3 [4.735]	59.9 [2.360]				82.55 [3.250]

Dimensions in mm [in]

Loading Information

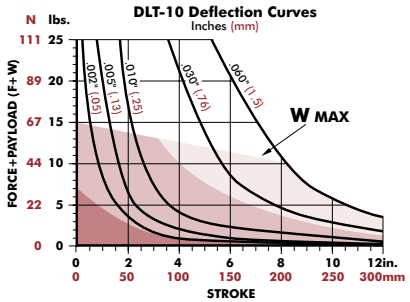

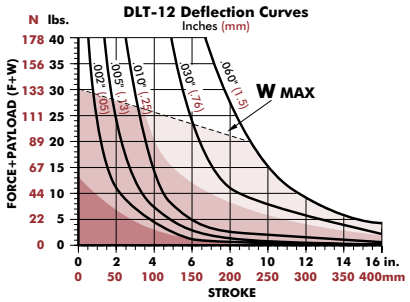

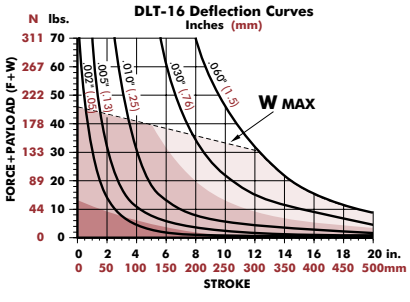

F=Externally applied force
W=Weight of payload
F+W=Total force
M=Maximum moment (in-lb. or N-m)

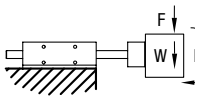

Shock Absorbers and Flow Controls are recommended for all applications

Use **Double Shocks** in both directions | Use **Single Shock** in both directions | Use **Bumpers or Cushioned Cylinder**

Shaded shock absorption ranges of horizontal payload (W) @ 80psi, flow controls fully open. For vertical applications do not exceed 1/2 of the recommended payload due to the additional acceleration effect of gravity.

Dimensions and technical information are subject to change without notice

External Air Cylinder Linear Thruster Slides | Dimensions and Technical Specifications

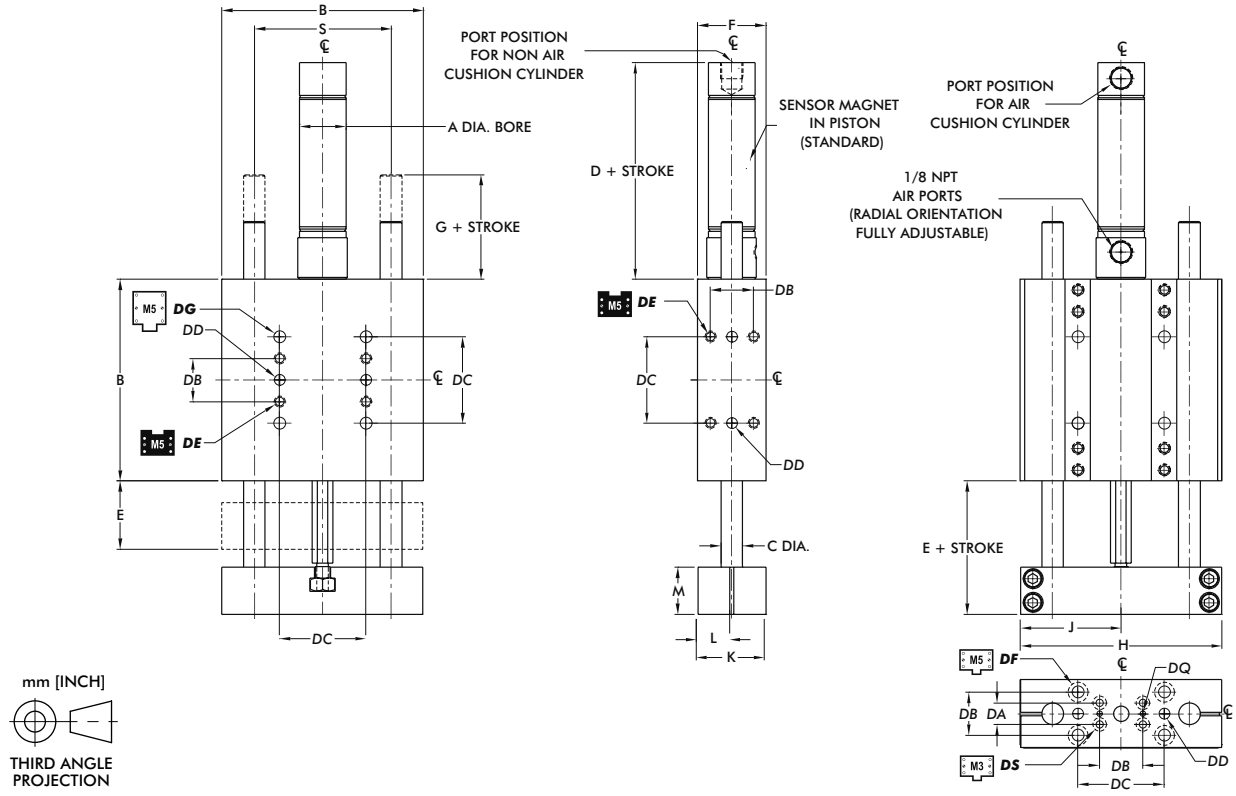

DIRECTCONNECT™ Mounting Pattern Dimensions (all sizes)							
DA	DB	DC	DD	DE	DF	DG	DQ	DS
9.5 [0.375]	19.1 [0.750]	38.1 [1.500]	[0.1880 x 0.25 DP]	[#10-32 x .34 DP]	[CLR & C'BORE FOR #10]		[0.0940 x 0.078 DP]	[CLR & C'BORE FOR #4]

Model	Bore Ø	Body Size	Shaft Ø	Basic Unit Dimensions									
	A	B	C	D	E	F	G	H	J	K	L	M	S
DLB-10	19 [3/4]	88.9 [3.50]	9.5 [0.375]	87.4 [3.44]	33.4 [1.313]	30.2 [1.19]	20.8 [0.82]	88.6 [3.490]	44.2 [1.740]	29.9 [1.178]	14.8 [0.584]	20.7 [0.813]	60.33 [2.375]
DLB-12	28.6 [1 1/8]	101.6 [4.00]	12.0 [0.472]			41.4 [1.63]		101.2 [3.985]	50.4 [1.985]	41.0 [1.615]	20.4 [0.802]		69.85 [2.750]
DLB-16		120.7 [4.75]	16.0 [0.630]		34.9 [1.375]		19.3 [0.76]	120.3 [4.735]	59.9 [2.360]				82.55 [3.250]

Dimensions in mm [in]

Loading Information

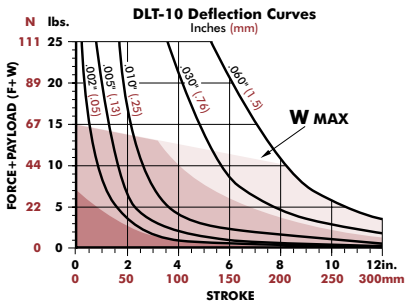

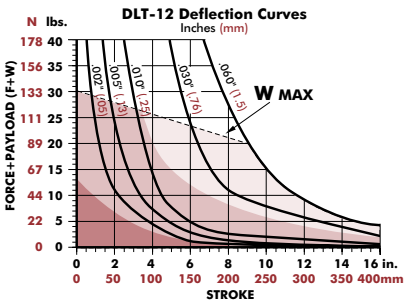

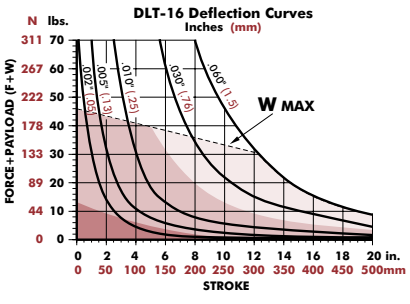

F=Externally applied force
W=Weight of payload
F+W=Total force
M=Maximum moment (in-lb. or N-m)

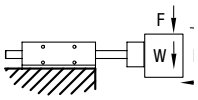

Shock Absorbers and Flow Controls are recommended for all applications

Use **Double Shocks** in both directions | Use **Single Shock** in both directions | Use **Bumpers or Cushioned Cylinder**

Shaded shock absorption ranges of horizontal payload (W) @ 80psi, flow controls fully open. For vertical applications do not exceed 1/2 of the recommended payload due to the additional acceleration effect of gravity.

DLT-20/25-T, A

External Air Cylinder Linear Thruster Slides | Dimensions and Technical Specifications

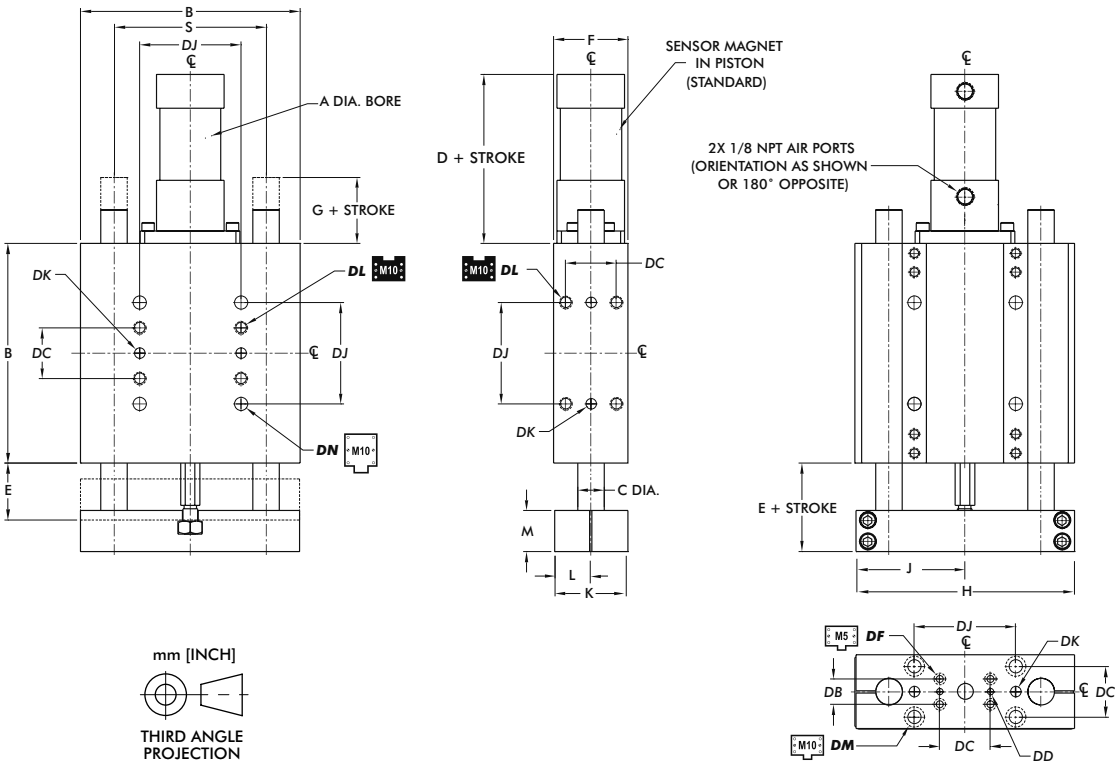

DIRECTCONNECT™ Mounting Pattern Dimensions (all sizes)							
DB	DC	DD	DF	DJ	DK	DL	DM	DN
19.1 [0.750]	38.1 [1.500]	[0.1880 x 0.25 DP]	[CLR & C'BORE FOR #10]	76.2 [3.000]	[0.3130 x 0.37 DP]	[3/8 -16 x 0.56 DP]	[CLR & C'BORE FOR 3/8]	

Model	Bore Ø	Body Ø	Shaft Ø	Basic Unit Dimensions									
	A	B	C	D	E	F	G	H	J	K	L	M	S
DLB-20	38.1 [1 1/2]	165.1 [6.50]	20 [0.787]	76.2 [3.00]	49.8 [1.960]	55.9 [2.20]	24.4 [0.960]	164.6 [6.480]	82.0 [3.230]	55.4 [2.180]	27.4 [1.080]	30.7 [1.210]	114.30 [4.500]
DLB-25		190.5 [7.50]	25 [0.984]		55.1 [2.170]		29.7 [1.170]	190.0 [7.480]	94.7 [3.730]			36.1 [1.420]	133.35 [5.250]

Dimensions in mm [in]

Loading Information

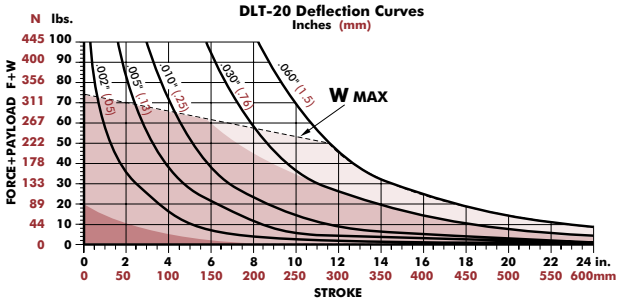

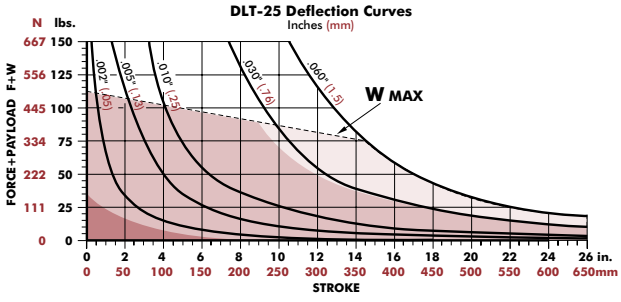

F=Externally applied force
W=Weight of payload
F+W=Total force
M=Maximum moment (in-lb. or N-m)

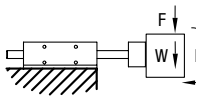

Shock Absorbers and Flow Controls are recommended for all applications

Use **Double Shocks** in both directions | Use **Single Shock** in both directions | Use **Bumpers or Cushioned Cylinder**

Shaded shock absorption ranges of horizontal payload (W) @ 80psi, flow controls fully open. For vertical applications do not exceed 1/2 of the recommended payload due to the additional acceleration effect of gravity.

Dimensions and technical information are subject to change without notice

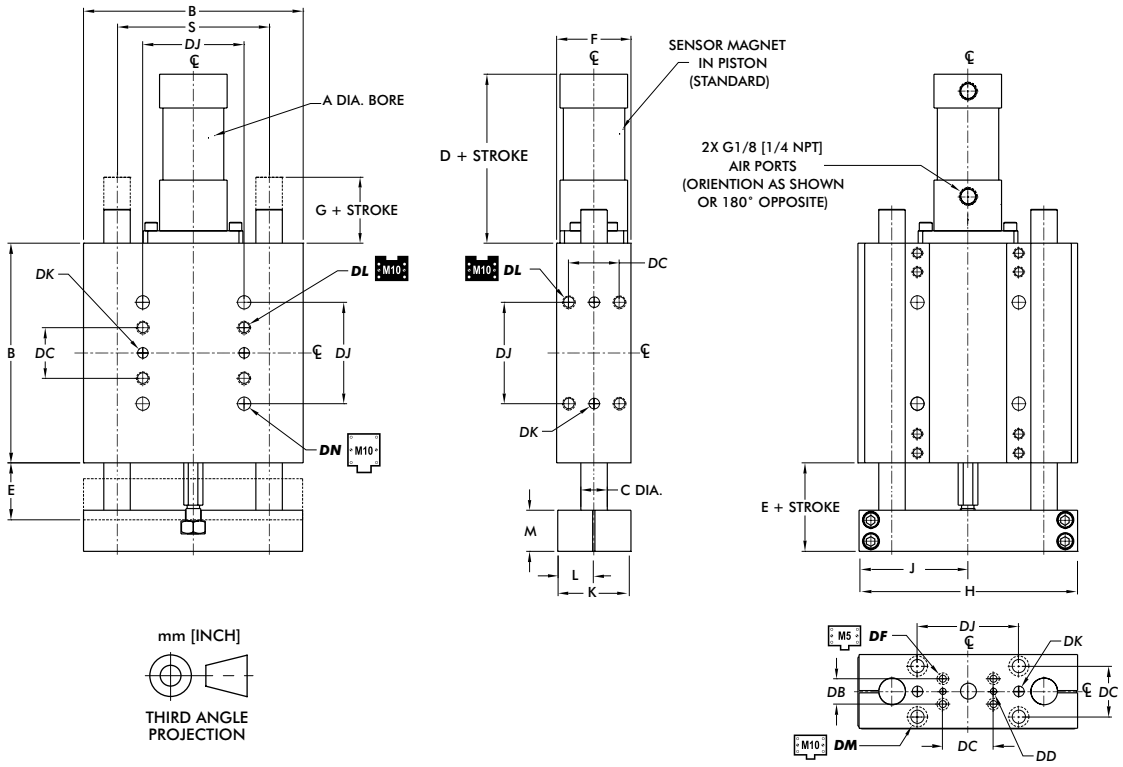

DIRECTCONNECT™ Mounting Pattern Dimensions (all sizes)							
DB	DC	DD	DF	DJ	DK	DL	DM	DN
19.1 [0.750]	38.1 [1.500]	5mm H7 x 6 DP [0.1880 x 0.25 DP]	CLR & C'BORE FOR M5 [CLR & C'BORE FOR #10]	76.2 [3.000]	8mm H7 x 9.4 DP [0.3130 x 0.37 DP]	M10 x 14.2 DP [3/8 -16 x 0.56 DP]	CLR & C'BORE FOR M10 [CLR & C'BORE FOR 3/8]	

Model	Bore Ø	Body Ø	Shaft Ø	Basic Unit Dimensions									
	A	B	C	D	E	F	G	H	J	K	L	M	S
DLB-20	32 [1 1/2]	165.1 [6.50]	20 [0.787]	107.7 [4.01]	49.8 [1.960]	55.9 [2.20]	24.4 [0.960]	164.6 [6.480]	82.0 [3.230]	55.4 [2.180]	27.4 [1.080]	30.7 [1.210]	114.30 [4.500]
DLB-25		190.5 [7.50]	25 [0.984]		55.1 [2.170]		29.7 [1.170]	190.0 [7.480]	94.7 [3.730]			36.1 [1.420]	133.35 [5.250]

Dimensions in mm [in]

Loading Information

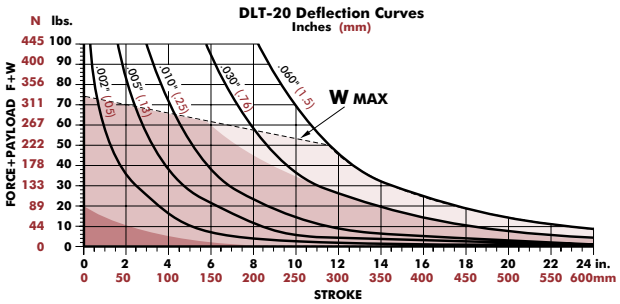

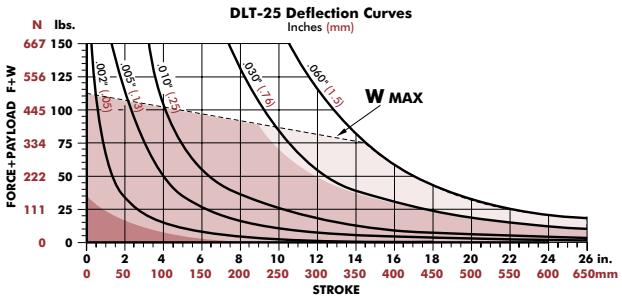

F=Externally applied force
W=Weight of payload
F+W=Total force
M=Maximum moment (in-lb. or N-m)

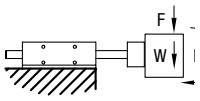

Shock Absorbers and Flow Controls are recommended for all applications

Use **Double Shocks** in both directions | Use **Single Shock** in both directions | Use **Bumpers or Cushioned Cylinder**

Shaded shock absorption ranges of horizontal payload (W) @ 80psi, flow controls fully open. For vertical applications do not exceed 1/2 of the recommended payload due to the additional acceleration effect of gravity.

BASE SLIDE ACCESSORIES

Linear Slides | Accessory Mounting Technical Data

DLB-B, L Internally Powered Base Slides

Shock Absorbers

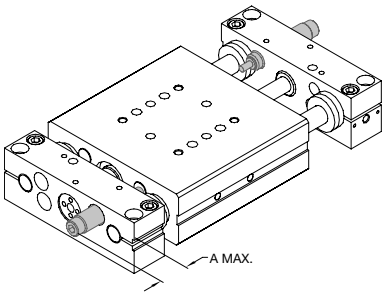

Adjustable Hard Stops

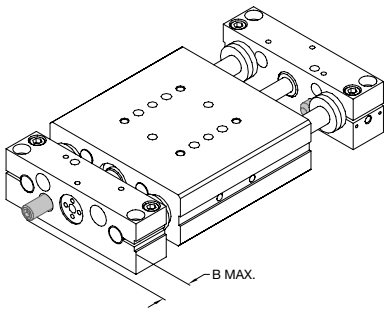

Inductive Proximity Sensors

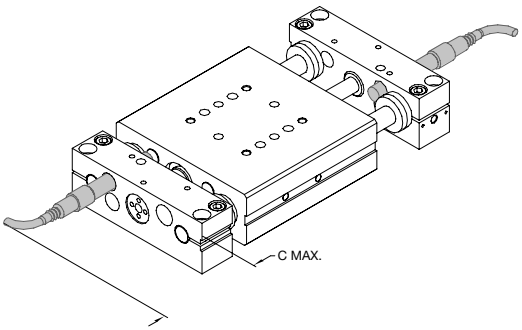

Telescopic Airlines

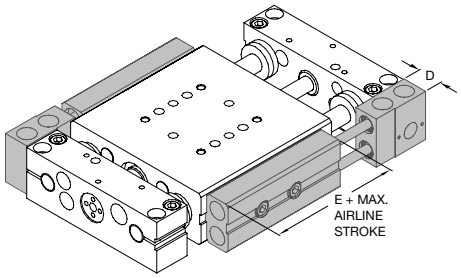

Flow Controls

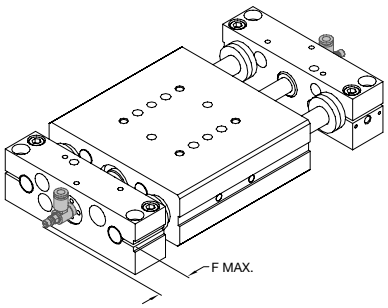

Model	A	B	C	D	E	F
DLB-06M	13.5 [0.53]	10.2 [0.40]	45.7 [1.8]	--	--	25.9 [1.02]
DLB-08M				--	--	
DLB-10	17.8 [0.70]	11.9 [0.47]	63.5 [2.5]	14.7 [0.577]	91.4 [3.60]	31.8 [1.25]
DLB-12	24.1 [0.95]					
DLB-16						
DLB-20	51.6 [2.03]	2.5 [0.10]	53.8 [2.1]			
DLB-25	46.2 [1.82]		48.3 [1.9]			

Dimensions in mm [in]

DLB-T, A, N Externally Powered Base Slides

Shock Absorbers

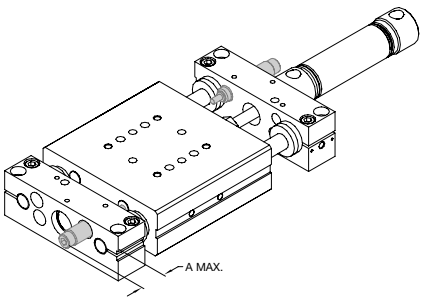

Adjustable Hard Stops

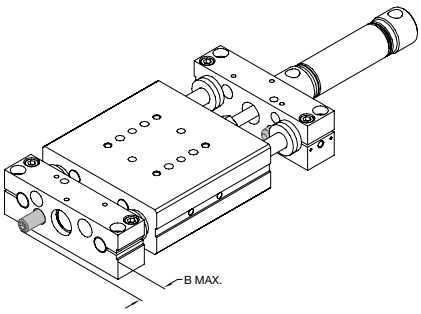

Telescoping Airlines & Flow Controls

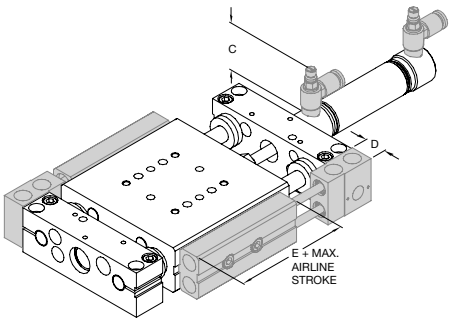

Inductive Proximity Sensors

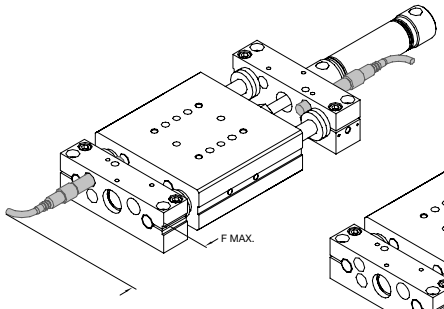

Magneto Resistive Sensors

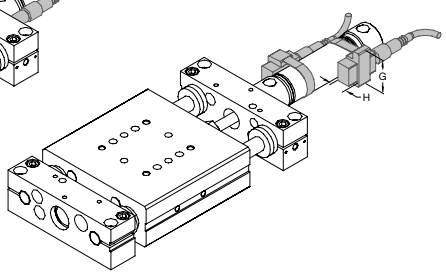

Model	A	B	C	D	E	F	G	H
DLB-06M	13.5 [0.53]	10.2 [0.40]	25.9 [1.02]	--	--	45.7 [1.8]	25.4 [1.00]	10.9 [0.43]
DLB-08M				--	--			
DLB-10	17.8 [0.70]	11.9 [0.47]	31.8 [1.25]	14.7 [0.577]	91.4 [3.60]	63.5 [2.5]		
DLB-12	24.1 [0.95]							
DLB-16								
DLB-20	51.6 [2.03]	2.5 [0.10]				53.8 [2.12]		
DLB-25	46.2 [1.82]					48.3 [1.90]		

Dimensions in mm [in]

Dimensions and technical information are subject to change without notice

LINEAR THRUSTER ACCESSORIES

Linear Slides | Accessory Mounting Technical Data

DLT-B, E, L Internally Powered Thruster Slides

Urethane Bumpers & Clamp Collars (DLT-E, L only)

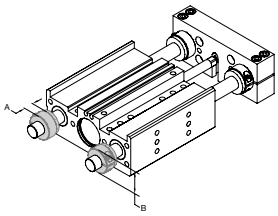

Adjustable Hard Stop & Shock Absorbers

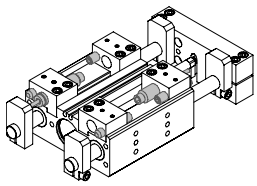

Universal Mounting Kit

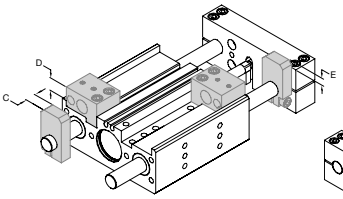

Telescoping Airlines (DLT-E, L only)

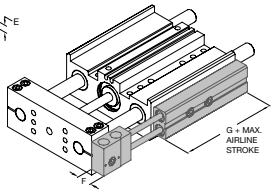

Base Flange Kit (DLT-B only)

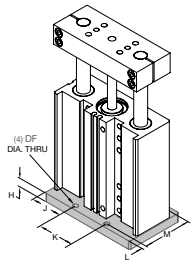

Inductive Proximity Sensors

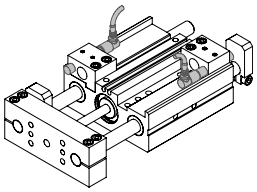

Magneto Resistive Sensors

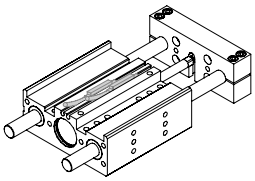

Model	A	B	C	D	E	F	G	H	J	K	L	M
DLT-06M	6.0 [0.236]	12 [0.470]	6.4 [0.250]	7.9 [0.310]	6.9 [0.270]	--	--	3.2 [0.125]	8.0 [0.313]	35 [1.376]	3.2 [0.125]	28.6 [1.125]
DLT-08M		16 [0.630]							14.3 [0.563]			
DLT-10	8.7 [0.343]	22.1 [0.87]	9.5 [0.375]	12.2 [0.480]	8.1 [0.320]	14.7 [0.577]	91.4 [3.60]	9.0 [0.355]	25.4 [1.000]	38.1 [1.500]	4.8 [0.188]	38.1 [1.500]
DLT-12	9.5 [0.375]	23.9 [0.95]		11.4 [0.450]	5.8 [0.230]				32.5 [1.281]			50.8 [2.000]
DLT-16	11.1 [0.437]	33.3 [1.31]	11.1 [0.437]		8.6 [0.340]				42.1 [1.656]			
DLT-20	12.7 [0.500]	38.1 [1.50]	12.7 [0.500]	22.4 [0.920]	17.0 [0.67]			12.2 [0.480]	44.5 [1.750]	76.2 [3.000]	9.5 [0.375]	76.2 [3.000]
DLT-25		44.5 [1.75]							57.2 [2.250]			

Dimensions in mm [in]

DLT-T, A, N Externally Powered Thruster Slides

Urethane Bumpers & Clamp Collars

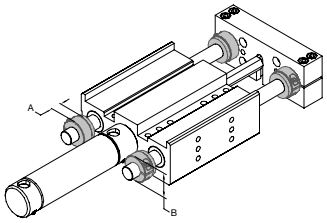

Adjustable Hard Stop & Shock Absorbers

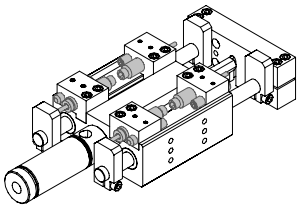

Universal Mounting Kit

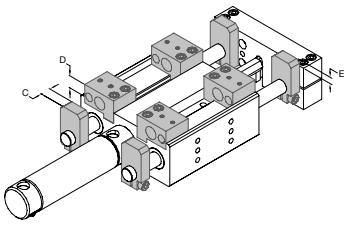

Telescoping Airlines & Flow Controls

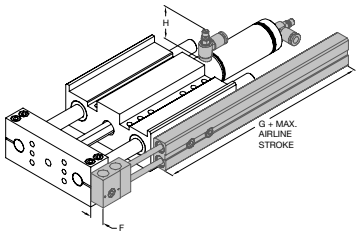

Inductive Proximity Sensors

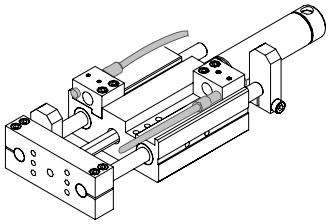

Magneto Resistive Sensors

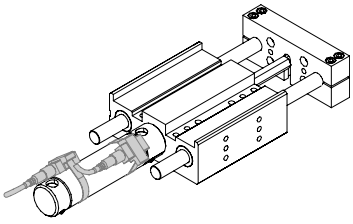

Model	A	B	C	D	E	F	G	H
DLT-06M	6.0 [0.236]	12.0 [0.47]	6.4 [0.250]	7.9 [0.31]	6.9 [0.27]	--	--	46.2 [1.82]
DLT-08M		16.0 [0.63]						
DLT-10	8.7 [0.343]	22.1 [0.87]	9.5 [0.375]	12.2 [0.480]	8.1 [0.320]	14.7 [0.577]	91.4 [3.60]	28.4 [1.12]
DLT-12	9.5 [0.375]	23.9 [0.95]		11.4 [0.450]	5.8 [0.230]			
DLT-16	11.1 [0.437]	33.3 [1.31]	11.1 [0.437]		8.6 [0.340]			
DLT-20	12.7 [0.500]	38.1 [1.50]	12.7 [0.500]	23.4 [0.92]	17.0 [0.670]			
DLT-25		44.5 [1.75]						

Dimensions in mm [in]

DLM SERIES

Miniature Rail Thruster Slide | Features and Benefits | How To Order

Features:

- Compact high reliability bearing design
- Excellent part position repeatability
- Double bearings **-D** for longer strokes, greater load and moment capacity
- Internal Delrin® extend and retract stops **-P** for increased repeatability
- Sense up to 8 positions with 4 adjustable magneto resistive sensors
- Multiple tapped air ports on each side, rear and bottom of body
- Thru-body mounting and DIRECTCONNECT™ thru tapped and dowel mounting, on tool plate and body
- Viton® seals for operation in high temperature environments



(USB key shown for scale)

Applications:

- Precision applications
- Small parts handling

How To Order

Base Model
DLM

Bearings Description
"Blank" Single Bearings
D Double Bearings*
*Not available on DLM-07-12, 09-25, 12-25

Stops Description
"Blank" None
P Precision Stops

Bore Size	Body Size	Stroke Metric (mm)
07M	12	5, 10, 12
	25	12, 15, 20, 25
	38	25, 30, 35, 38
	50	38, 40, 45, 50
09M or 12M	25	5, 10, 15, 20, 25
	50	25, 30, 35, 40, 45, 50
	75	50, 55, 60, 65, 70, 75
	100	75, 80, 85, 90, 95, 100

Accessories

Sensor Accessories	Model Numbers	Part Number	Qty/Unit
PNP Magneto Resistive Sensor Short Barrel (with Qk. Disc.)*	All Models	OHSP-017	1-4
NPN Magneto Resistive Sensor Short Barrel (with Qk. Disc.)*	All Models	OHSN-017	1-4
PNP Magneto Resistive Sensor 90° Barrel (with Qk. Disc.)*	All Models	OHSP-011	1-4
NPN Magneto Resistive Sensor 90° Barrel (with Qk. Disc.)*	All Models	OHSN-011	1-4
Quick Disconnect 2 Meter Cable Length*	All Models	CABL-010	1-4
Quick Disconnect 5 Meter Cable Length*	All Models	CABL-013	1-4

Pneumatic Accessories	Model Numbers	Part Number	Qty/Unit
Adjustable Flow Control	All Models	VLFL-008	1-2
Seal Kits	See Datasheets		1

*Sensor and cable sold separately.

Dimensions and technical information are subject to change without notice

Specifications	Units	DLM-07M-12	DLM-07M-25	DLM-07M-38	DLM-07M-50
Thrust Force **F** @ 7 bar [100 psi]	N [lbs]	66 [15]			
Max. Stroke	mm [in]	12 [0.50]	25 [1.00]	38 [1.50]	50 [2.00]
Stroke Reduction (return)	mm [in]	5 [0.19]			
Weight	kg [lbs]	0.13 [0.28]	0.16 [0.35]	0.20 [0.43]	0.23 [0.50]
Max. Payload **W**	kg [lbs]	0.45 [1.0]			
Max. Payload **W** (-P option)	kg [lbs]	0.23 [0.5]			
Cylinder Bore Ø	mm [in]	0.11 [0.437]			
Temperature Range	°C [°F]	-35°~80° [-30°~180°]			
Actuation (per 25mm of travel)	sec	0.07			
Linear Accuracy (per 25mm of travel)	mm [in]	±0.005 [±0.0001]			
Repeatability (-P option)	mm [in]	±0.08 [±0.003]			
Pressure Range	bar [psi]	1.4-7 [20-100]			
Valve to Actuate Double Acting		4-way, 2-position			

Specifications	Units	DLM-09M-25	DLM-09M-50	DLM-09M-75	DLM-09M-100
Thrust Force **F** @ 7 bar [100 psi]	N [lbs]	138 N [31 lbs]			
Max. Stroke	mm [in]	25 [1.00]	50 [2.00]	75 [3.00]	100 [4.00]
Stroke Reduction (return)	mm [in]	5 [0.19]			
Weight	kg [lbs]	0.49 [1.08]	0.64 [1.41]	0.81 [1.78]	0.97 [2.13]
Max. Payload **W**	kg [lbs]	0.90 [2.0]			
Max. Payload **W** (-P option)	kg [lbs]	0.45 [1.0]			
Cylinder Bore Ø	mm [in]	16 [0.630]			
Temperature Range	°C [°F]	-35°~80° [-30°~180°]			
Actuation (per 25mm of travel)	sec	0.10			
Linear Accuracy (per 25mm of travel)	mm [in]	±0.005 [±0.0001]			
Repeatability (-P option)	mm [in]	±0.08 [±0.003]			
Pressure Range	bar [psi]	1.4-7 [20-100]			
Valve to Actuate Double Acting		4-way, 2-position			

Specifications	Units	DLM-12M-25	DLM-12M-50	DLM-12M-75	DLM-12M-100
Thrust Force **F** @ 7 bar [100 psi]	N [lbs]	230 [51]			
Max. Stroke	mm [in]	25 [1.00]	50 [2.00]	75 [3.00]	100 [4.00]
Stroke Reduction (return)	mm [in]	5 [0.19]			
Weight	kg [lbs]	0.54 [1.18]	0.65 [1.43]	1.82 [1.80]	1.02 [2.25]
Max. Payload **W**	kg [lbs]	1.81 [4.0]			
Max. Payload **W** (-P option)	kg [lbs]	0.90 [2.0]			
Cylinder Bore Ø	mm [in]	22 [0.813]			
Temperature Range	°C [°F]	-35°~80° [-30°~180°]			
Actuation (per 25mm of travel)	sec	0.14			
Linear Accuracy (per 25mm of travel)	mm [in]	±0.005 [±0.0001]			
Repeatability (-P option)	mm [in]	±0.08 [±0.003]			
Pressure Range	bar [psi]	1.4-7 [20-100]			
Valve to Actuate Double Acting		4-way, 2-position			

DLM-07M

Miniature Rail Thruster Slide | Dimensions and Technical Specifications

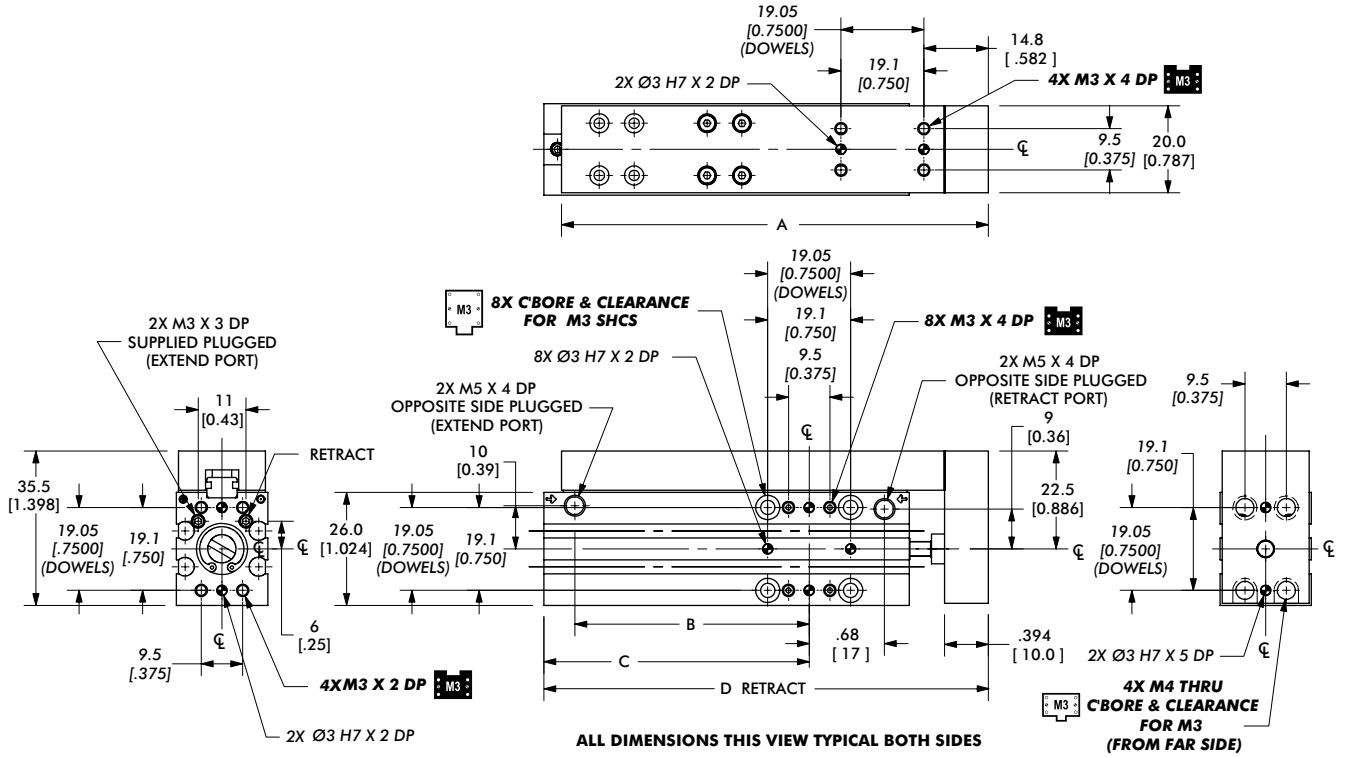

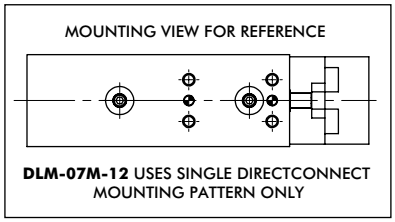

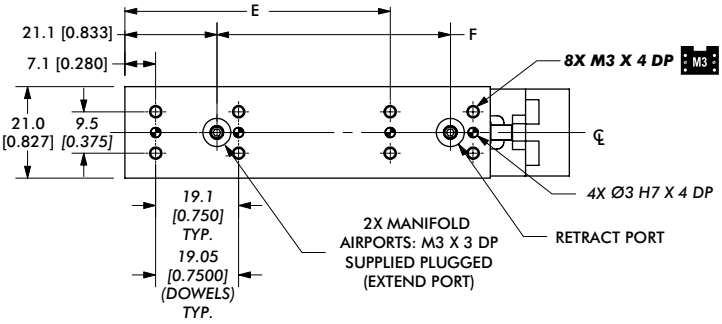

mm [INCH]

THIRD ANGLE PROJECTION

Seal Repair Kits	Order #
Buna-N Seal Repair Kit	SLKT-236
Manifold Seal Repair Kit	SLKT-239

Model	A	B	C	D	E	F	L (single bearing)	L (double bearing)
DLM-07M-12	66.0 [2.599]	30 [1.18]	37.0 [1.456]	78 [3.08]	37.0 [1.456]	29.6 [1.167]	53 [2.10]	--
DLM-07M-25	98.0 [3.859]	54 [2.12]	61.0 [2.401]	102 [4.02]	60.9 [2.401]	53.6 [2.112]	61 [2.39]	73 [2.87]
DLM-07M-38	111.0 [4.370]	67 [2.63]	74.0 [2.913]	115 [4.53]	74.0 [2.913]	66.6 [2.624]	74 [2.90]	86 [3.38]
DLM-07M-50	123.0 [4.843]	79 [3.10]	86.0 [3.385]	127 [5.00]	86.0 [3.385]	78.6 [3.096]	86 [3.37]	98 [3.86]

Dimensions in mm [in]

Loading Information

Forces shown for single bearing units. Values 2X for double bearings **-D** option.

DLM-07	Static
Maximum Tensile **T**	490 N [110 lbs]
Maximum Compressive **C**	490 N [110 lbs]
Maximum Moment $\mathbf{M_X}$	5.1 Nm [45 in-lbs]
Maximum Moment **My**	3.2 Nm [28 in-lbs]
Maximum Payload **W**	3.2 Nm [28 in-lbs]
Distance to Bearing Centerline	**L** (see chart above)

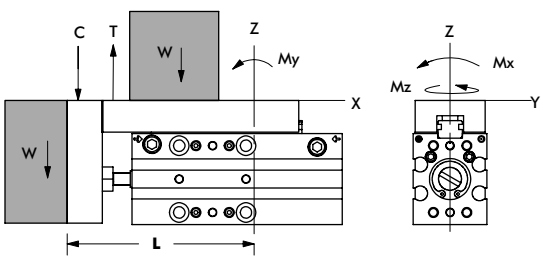

Flow Controls are recommended for all applications

Dimensions and technical information are subject to change without notice

Miniature Rail Thruster Slide | Dimensions and Technical Specifications

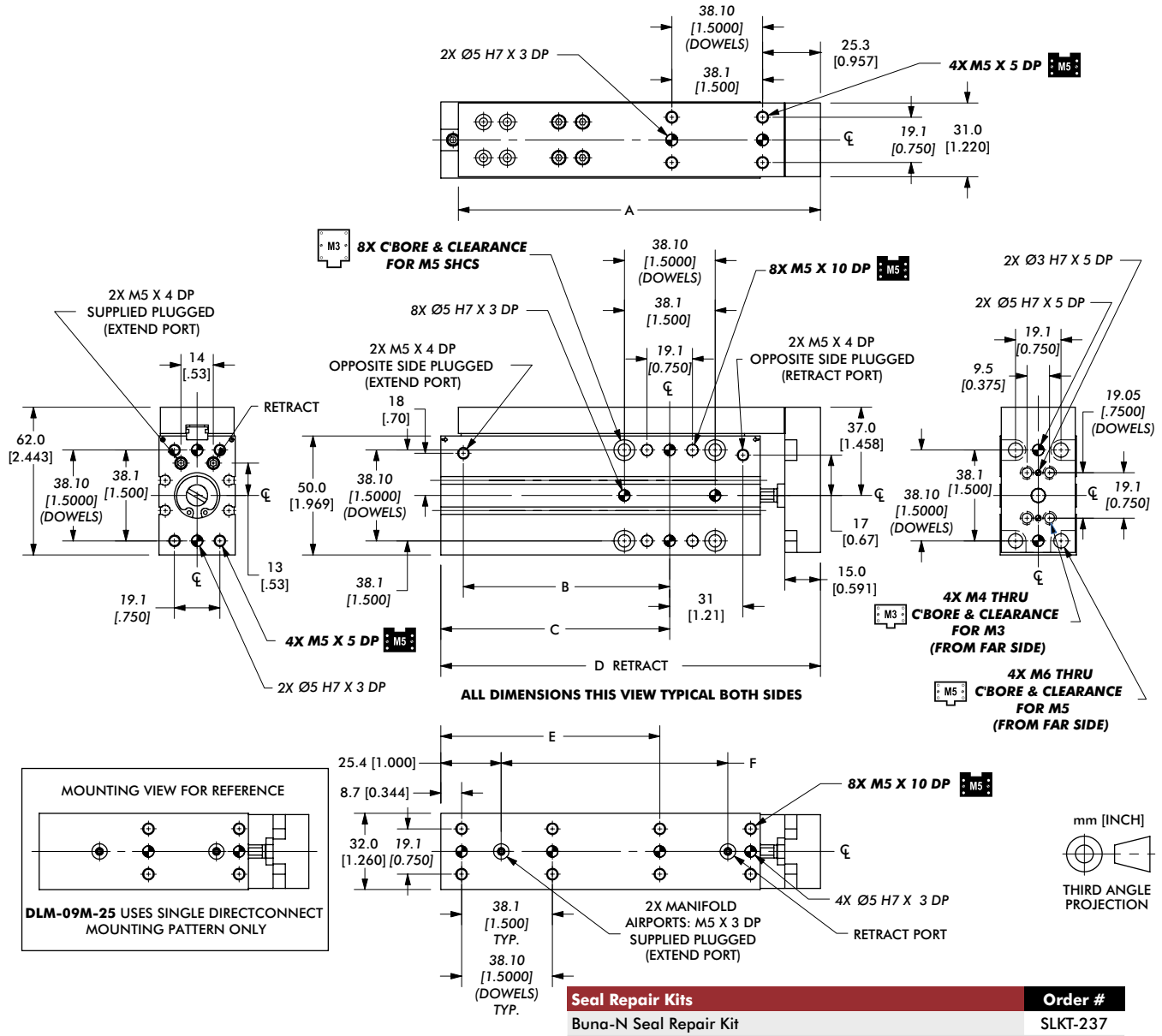

Seal Repair Kits	Order #
Buna-N Seal Repair Kit	SLKT-237
Manifold Seal Repair Kit	SLKT-240

Model	A	B	C	D	E	F	L (single bearing)	L (double bearing)
DLM-09M-25	102.0 [4.016]	41 [1.60]	50.1 [1.973]	113 [4.46]	45.9 [1.809]	49.1 [1.934]	86 [3.40]	--
DLM-09M-50	152.0 [5.985]	87 [3.41]	96.1 [3.784]	159 [6.27]	91.9 [3.620]	95.1 [3.745]	105 [4.13]	121 [4.75]
DLM-09M-75	173.0 [6.811]	112 [4.39]	121.1 [4.768]	184 [7.26]	116.9 [4.604]	120.1 [4.729]	126 [4.95]	142 [5.58]
DLM-09M-100	202.0 [7.953]	137 [5.38]	146.1 [5.752]	209 [8.24]	138.9 [5.557]	145.1 [5.713]	155 [6.10]	171 [6.72]

Dimensions in mm [in]

Loading Information

Forces shown for single bearing units. Values 2X for double bearings **-D** option.

DLM-09	Static
Maximum Tensile **T**	735 N [165 lbs]
Maximum Compressive **C**	735 N [165 lbs]
Maximum Moment M_X	9.6 Nm [84 in-lbs]
Maximum Moment M_Y	6.4 Nm [56 in-lbs]
Maximum Payload **W**	6.4 Nm [56 in-lbs]
Distance to Bearing Centerline	**L** (see chart above)

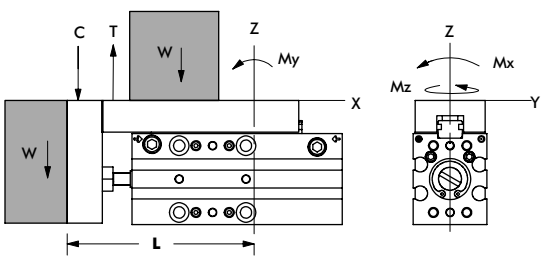

Flow Controls are recommended for all applications

DLM-12M

Miniature Rail Thruster Slide | Dimensions and Technical Specifications

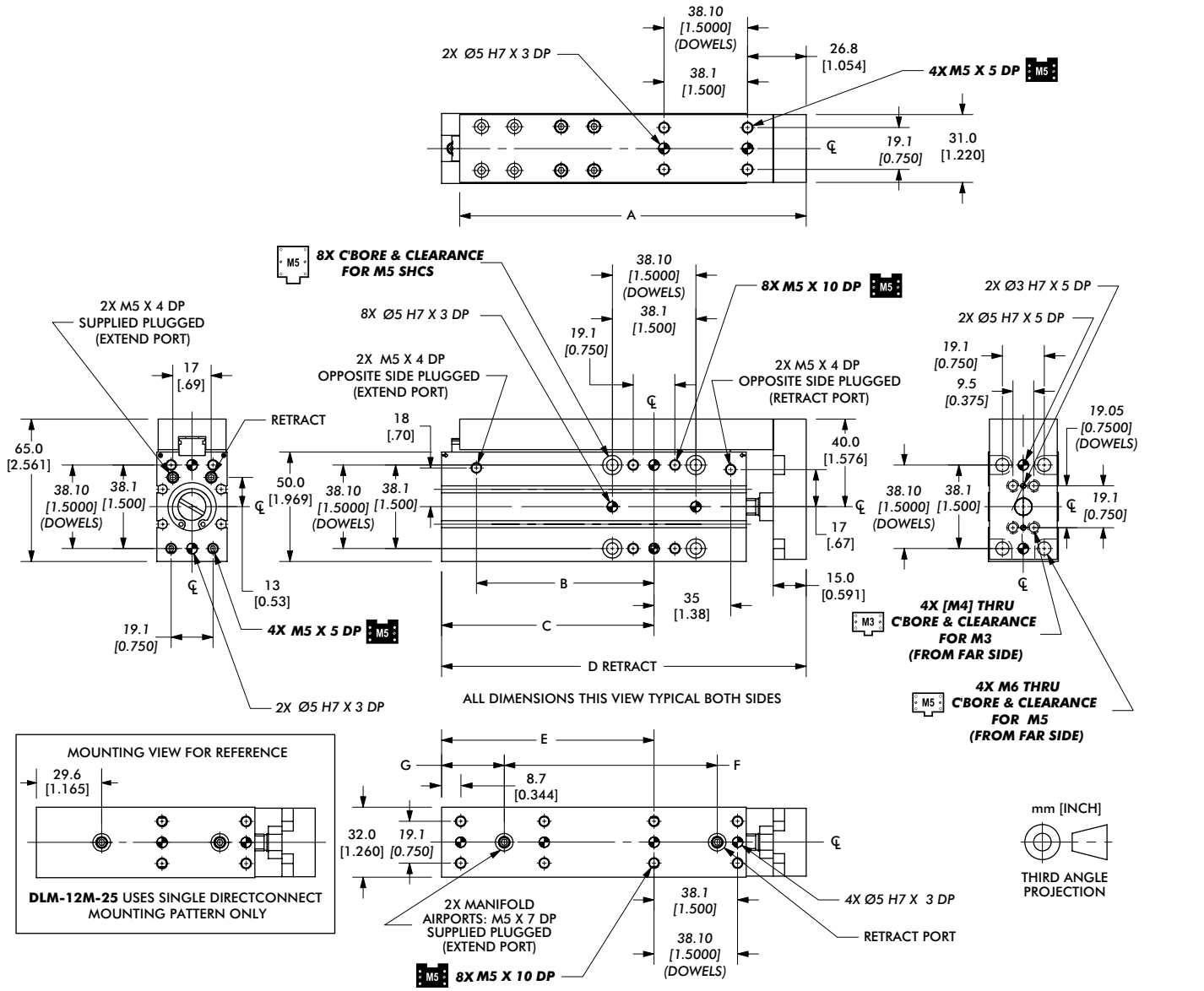

Seal Repair Kits	Order #
Buna-N Seal Repair Kit	SLKT-238
Manifold Seal Repair Kit	SLKT-240

Model	A	B	C	D	E	F	G	L (single bearing)	L (double bearing)
DLM-12M-25	105.0 [4.134]	41 [1.62]	56.9 [2.242]	126 [4.97]	56.9 [2.242]	53.5 [2.108]	29.6 [1.165]	88 [3.45]	--
DLM-12M-50	158.0 [6.221]	81 [3.19]	96.9 [3.816]	166 [6.55]	96.9 [3.816]	97.1 [3.824]		104 [4.10]	122 [4.82]
DLM-12M-75	186.0 [7.323]	108 [4.25]	123.9 [4.879]	193 [7.61]	123.9 [4.879]	124.1 [4.887]	28.6 [1.125]	132 [5.21]	150 [5.92]
DLM-12M-100	208.0 [8.189]	133 [5.24]	148.9 [5.864]	218 [8.60]	148.9 [5.864]	149.1 [5.872]		154 [6.07]	172 [6.79]

Dimensions in mm [in]

Loading Information

Forces shown for single bearing units. Values 2X for double bearings **-D** option.

DLM-12M	Static
Maximum Tensile **T**	1214 N [273 lbs]
Maximum Compressive **C**	1214 N [273 lbs]
Maximum Moment $\mathbf{M_X}$	20.6 Nm [182 in-lbs]
Maximum Moment **My**	11.8 Nm [104 in-lbs]
Maximum Payload **W**	11.8 Nm [104 in-lbs]
Distance to Bearing Centerline	**L** (see chart above)

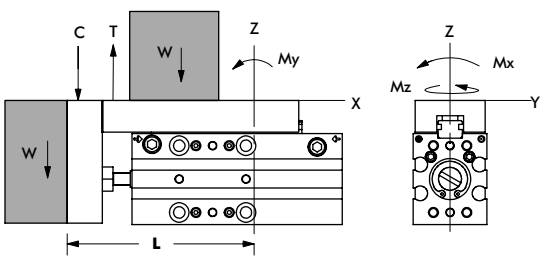

Flow Controls are recommended for all applications

Dimensions and technical information are subject to change without notice

Notes

MPS SERIES

Miniature Rail Thruster Slide | Features and Benefits | How To Order

Features:

- Compact high reliability bearing design
- Excellent part position repeatability
- Zero side play with patented preloaded "Dual-V" roller bearings
- Adjustable extend/retract hard stops
- Two Position sensing with hall effect sensors
- Viton® seals for operation in high temperature environments

Applications:

- Precision applications
- Small parts handling
- OEM packaging machines



How To Order

Base Model
MPS

Bore Size
1M
2M

Seals Description
"Blank" Buna-N
V Viton® High Temperature

Body Size **Stroke**
1 13mm [0.5"]
2 25mm [1.0"]
3 38mm [1.5"]
4 51mm [2.0"]

Accessories

Sensor Accessories	Model Numbers	Part Number	Qty/Unit
Magneto Resistive Sensor with Quick. Disconnect*	All Models	OHSN-006	1-2
Magneto Resistive Sensor with Quick. Disconnect*		OHSP-006	
Quick Disconnect 2 Meter Cable Length*		CABL-010	
Quick Disconnect 5 Meter Cable Length*		CABL-013	

Pneumatic Accessories	Model Numbers	Part Number	Qty/Unit
M5 Adjustable Flow Control	All Models	VLVF-008	1-2
M2.5 Barbed Fitting		PLFT-005	2
Seal Kit (Buna-N)	-1M	SLKT-090	1
Seal Kit (Viton®)	-1M	SLKT-090V	
Seal Kit (Buna-N)	-2M	SLKT-091	
Seal Kit (Viton®)	-2M	SLKT-091V	

*Sensor and cable sold separately.

Specifications	Units	1M-1	1M-2	1M-3	1M-4
Thrust Force **F** @ 7 bar [100 psi]	N [lbs]	67 [15]			
Max. Stroke	mm [in]	13 [0.50]	25 [1.00]	38 [1.50]	51 [2.00]
Stroke Adjustability (each end)	mm [in]	3 [0.12]		6 [0.25]	
Weight	kg [lb]	0.08 [0.18]	0.10 [0.22]	0.13 [0.28]	0.14 [0.32]
Max. Payload **W**	kg [lb]	0.14 [0.30]	0.32 [0.70]	0.45 [1.00]	0.59 [1.30]
Pressure Range	bar [psi]	1.5-7 [20-100]			
Cylinder Bore Ø	mm [in]	11.1 [0.438]			
Temperature Range (Buna-N seals)	°C [°F]	-35°~80° [-30°~180°]			
Temperature Range (Viton® seals)	°C [°F]	-30°~120° [-20°~250°]			
Actuation	sec	0.10	0.11	0.13	0.14
Linear Accuracy (per 25mm of travel)	mm [in]	±0.003 [±0.0001]			
Repeatability (-P option)	mm [in]	±0.03 [±0.010]			
Valve to Actuate Double Acting		4-way, 2-position			

Specifications	Units	2M-1	2M-2	2M-3	2M-4
Thrust Force **F** @ 7 bar [100 psi]	N [lbs]	196 [44]			
Max. Stroke	mm [in]	13 [0.50]	25 [1.00]	38 [1.50]	51 [2.00]
Stroke Adjustability (each end)	mm [in]	3 [0.12]		6 [0.25]	
Weight	kg [lb]	0.12 [0.26]	0.14 [0.32]	0.18 [0.40]	0.21 [0.46]
Max. Payload **W**	kg [lb]	0.23 [0.50]	0.45 [1.00]	0.91 [2.00]	1.36 [3.00]
Pressure Range	bar [psi]	1.5-7 [20-100]			
Cylinder Bore Ø	mm [in]	19.1 [0.750]			
Temperature Range (Buna-N seals)	°C [°F]	-35°~80° [-30°~180°]			
Temperature Range (Viton® seals)	°C [°F]	-30°~120° [-20°~250°]			
Actuation	sec	0.12	0.16	0.19	0.24
Linear Accuracy (per 25mm of travel)	mm [in]	±0.003 [±0.0001]			
Repeatability (-P option)	mm [in]	±0.03 [±0.010]			
Valve to Actuate Double Acting		4-way, 2-position			

MPS-1M

Miniature Rail Thruster Slide| Dimensions and Technical Specifications

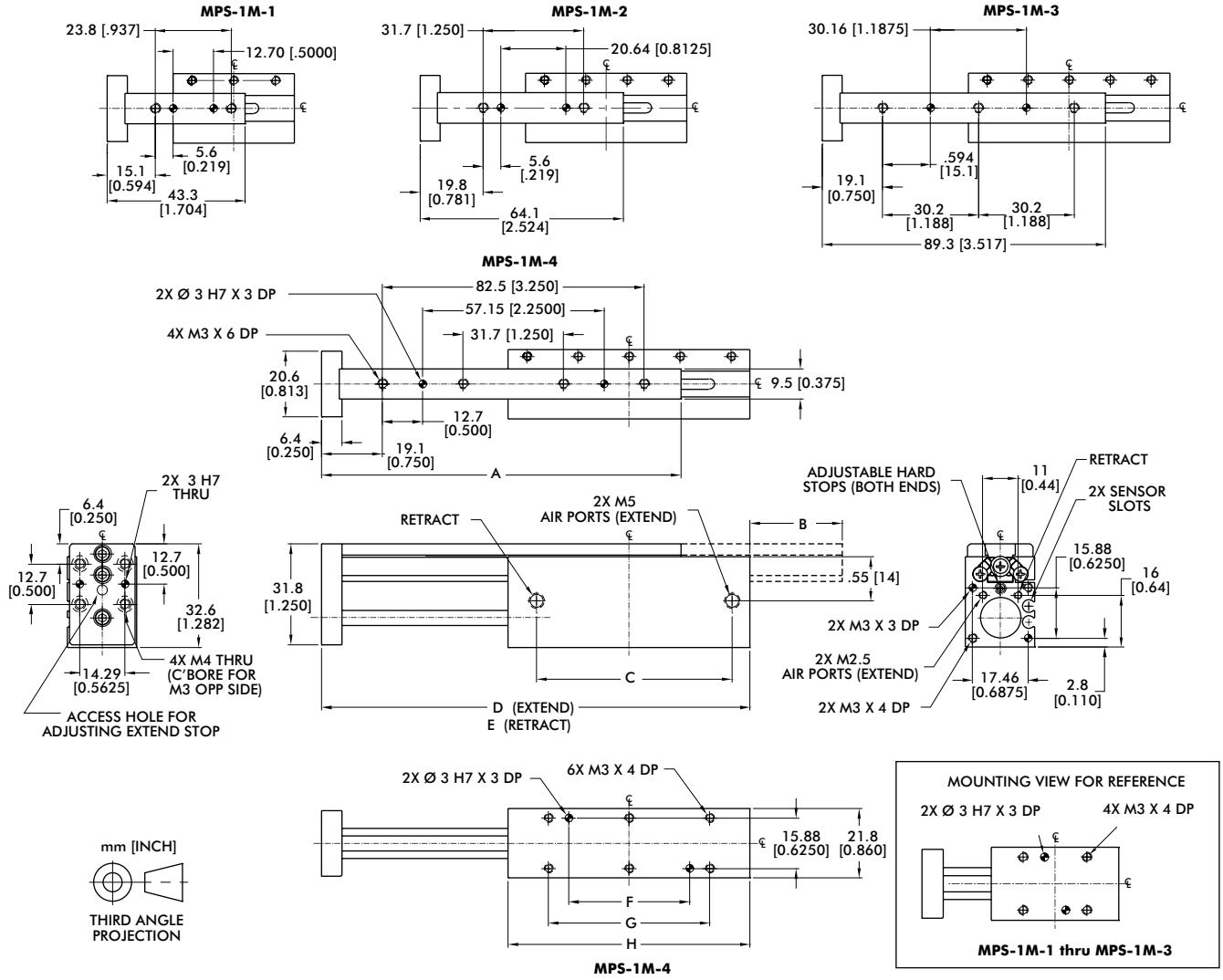

Model	A	B	C	D	E	F	G	H
MPS-1M-1	43.3 [1.704]	--	23 [0.92]	59 [2.31]	46 [1.81]	6.35 [0.2500]	19.1 [0.750]	38.1 [1.500]
MPS-1M-2	64.1 [2.524]	5.4 [0.211]	36 [1.43]	84 [3.31]	58 [2.31]	19.05 [0.7500]	31.8 [1.250]	50.8 [2.000]
MPS-1M-3	89.3 [3.517]	17.9 [0.704]	49 [1.93]	110 [4.31]	71 [2.81]	25.40 [1.0000]	38.1 [1.500]	63.5 [2.500]
MPS-1M-4	113.1 [4.454]	29.0 [1.141]	62 [2.43]	135 [5.31]	84 [3.31]	38.10 [1.5000]	50.8 [2.000]	76.2 [3.000]

Dimensions in mm [in]

Loading Information

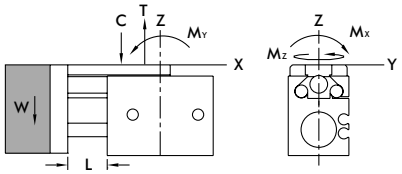

MPS-1M-1	Static
Maximum Tensile **T**	111 N [25 lbs]
Maximum Compressive **C**	111 N [25 lbs]
Maximum Moment M_x	3.4 Nm [30 in-lbs]
Maximum Moment M_y	2.3 Nm [20 in-lbs]
Maximum Moment M_z	2.3 Nm [20 in-lbs]

MPS-1M-3	Static
Maximum Tensile **T**	222 N [50 lbs]
Maximum Compressive **C**	222 N [50 lbs]
Maximum Moment M_x	6.8 Nm [60 in-lbs]
Maximum Moment M_y	4.5 Nm [40 in-lbs]
Maximum Moment M_z	4.5 Nm [40 in-lbs]

MPS-1M-2	Static
Maximum Tensile **T**	156 N [35 lbs]
Maximum Compressive **C**	156 N [35 lbs]
Maximum Moment M_x	4.5 Nm [40 in-lbs]
Maximum Moment M_y	3.4 Nm [30 in-lbs]
Maximum Moment M_z	3.4 Nm [30 in-lbs]

MPS-1M-4	Static
Maximum Tensile **T**	311 N [70 lbs]
Maximum Compressive **C**	311 N [70 lbs]
Maximum Moment M_x	9.0 Nm [80 in-lbs]
Maximum Moment M_y	5.7 Nm [50 in-lbs]
Maximum Moment M_z	5.7 Nm [50 in-lbs]

Miniature Rail Thruster Slide| Dimensions and Technical Specifications

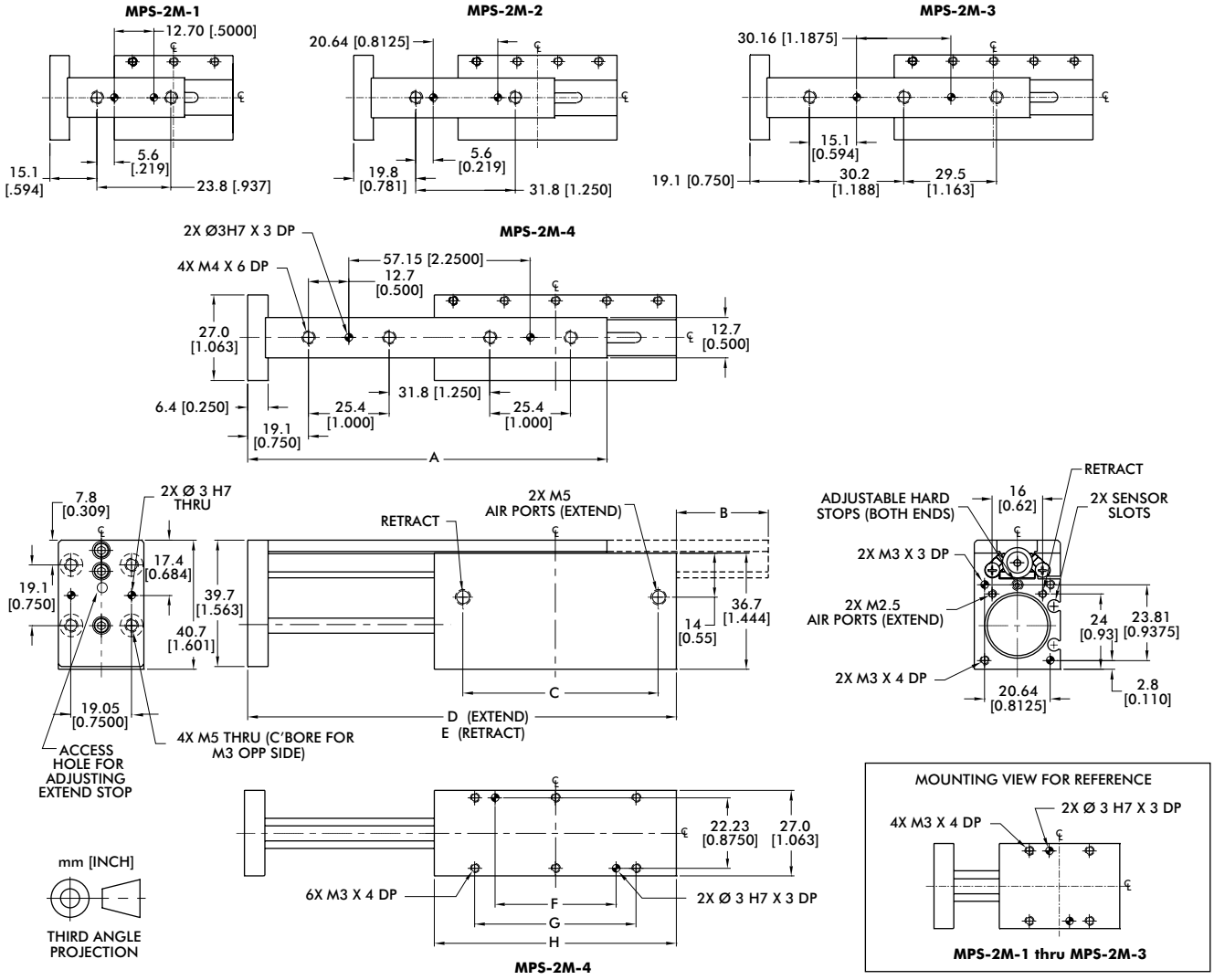

Model	A	B	C	D	E	F	G	H
MPS-2M-1	43.3 [1.704]	--	23 [0.92]	59 [2.31]	46 [1.81]	6.35 [0.2500]	19.1 [0.750]	38.1 [1.500]
MPS-2M-2	64.1 [2.524]	5.4 [0.211]	36 [1.43]	84 [3.31]	59 [2.31]	19.05 [0.7500]	31.7 [1.250]	50.8 [2.000]
MPS-2M-3	89.5 [3.524]	17.9 [0.704]	49 [1.92]	110 [4.31]	71 [2.81]	25.40 [1.0000]	38.1 [1.500]	63.5 [2.500]
MPS-2M-4	113.1 [4.454]	29.0 [1.141]	62 [2.42]	135 [5.31]	84 [3.31]	38.10 [1.5000]	50.8 [2.000]	76.2 [3.000]

Dimensions in mm [in]

Loading Information

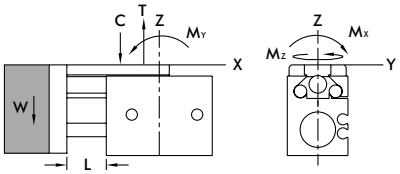

MPS-2M-1	Static
Maximum Tensile **T**	111 N [25 lbs]
Maximum Compressive **C**	111 N [25 lbs]
Maximum Moment M_x	3.4 Nm [30 in-lbs]
Maximum Moment M_y	2.3 Nm [20 in-lbs]
Maximum Moment M_z	2.3 Nm [20 in-lbs]

MPS-2M-2	Static
Maximum Tensile **T**	156 N [35 lbs]
Maximum Compressive **C**	156 N [35 lbs]
Maximum Moment M_x	4.5 Nm [40 in-lbs]
Maximum Moment M_y	3.4 Nm [30 in-lbs]
Maximum Moment M_z	3.4 Nm [30 in-lbs]

MPS-2M-3	Static
Maximum Tensile **T**	222 N [50 lbs]
Maximum Compressive **C**	222 N [50 lbs]
Maximum Moment M_x	6.8 Nm [60 in-lbs]
Maximum Moment M_y	4.5 Nm [40 in-lbs]
Maximum Moment M_z	4.5 Nm [40 in-lbs]

MPS-2M-4	Static
Maximum Tensile **T**	311 N [70 lbs]
Maximum Compressive **C**	311 N [70 lbs]
Maximum Moment M_x	9.0 Nm [80 in-lbs]
Maximum Moment M_y	5.7 Nm [50 in-lbs]
Maximum Moment M_z	5.7 Nm [50 in-lbs]

FEED ESCAPEMENTS

Grippers, Rotates, and Linear Slide Solutions

Model		Stroke Range	Thrust Range	Operating Environment	Special Features	Page GR-ESC-#
RFE		16-32mm [0.625-1.25 in]	111N - 400 N [25 lbs - 90 lbs]	IP54	Conveying part accumulator, part separator and staging. Failsafe finger locking	3
RN		16-32mm [0.625-1.25 in]	111N - 400 N [25 lbs - 90 lbs]	IP54	In-line part ejector and part staging. Conveying part accumulator or part separator.	7

FEED ESCAPEMENTS

Product Overview



Global Automation Solutions

DESTACO's Robohand products are engineered for reliability and long life to ensure maximum production uptime. These products are designed and machined for precise repeatability with minimal maintenance.



DESTACO a DOVER company

destaco.com

End Effectors | Grippers | Indexers | Manual Clamps | Power Clamps | Remote Handling

RFE SERIES

Feed Escapements | Features and Benefits | How To Order | Technical Specifications

Features:

- Sequential Part feeding with automatic finger locking mechanism
- Non-rotating square shaft maintains proper finger alignment
- Sealed design with adjustable retract stops
- Only one finger can be retracted at any time
- Unit can be mounted using top, bottom or face surface

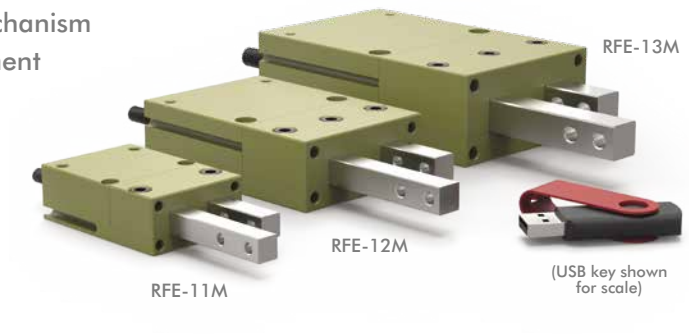

Applications:

- Part separation, part staging
- Conveying timing operations

How To Order

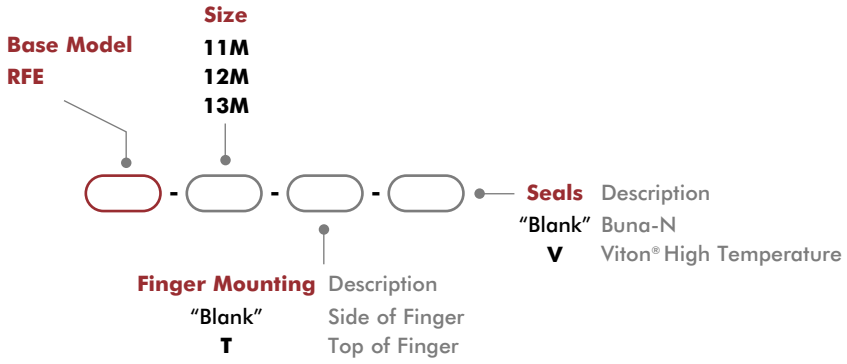

Accessories

Sensor Accessories	Model Numbers	Part Number	Qty/Unit
NPN Hall Effect Sensor with Quick Disconnect*	All Models	OHSN-017	1-2
PNP Hall Effect Sensor with Quick Disconnect*	All Models	OHSP-017	1-2
Quick Disconnect 2 Meter Cable Length*	All Models	CABL-010	1-2
Quick Disconnect 5 Meter Cable Length*	All Models	CABL-013	1-2

Pneumatic Accessories	Model Numbers	Part Number	Qty/Unit
M5 Adjustable Flow Control	All Models	VLVF-008	1-2

*Sensor and cable sold separately.

Specifications

Specifications	Units	11M	12M	13M
Thrust Force @ Maximum PSI	N [lbs]	111 [25]	222 [50]	400 [90]
Stroke	mm [in]	15.88 [0.625]	25.40 [1.000]	31.75 [1.250]
Stroke Adjustability	mm [in]	11 [0.44]	19 [0.75]	19 [0.75]
Weight	kg [lb]	0.15 [0.33]	0.39 [0.85]	0.83 [1.84]
Pressure Range	bar [psi]	3-7 [40-100]		
Cylinder Bore Ø	mm [in]	14.30 [0.563]	20 [0.787]	27 [1.063]
Rod Ø	mm [in]	6.35 [0.250]	7.95 [0.313]	9.52 [0.375]
Displacement	cm^3 [in^3]	2.6 [0.156]	8.0 [0.487]	18.2 [1.108]
Temperature Range (Buna-N seals)	°C [°F]	-35°~80° [-30°~180°]		
Temperature Range (Viton® seals)	°C [°F]	-30°~150° [-20°~300°]		
Actuation	sec	0.40	0.60	0.70
Parts Escaped per Minute		150	100	85
Valve to Actuate		4-way, 2-position		

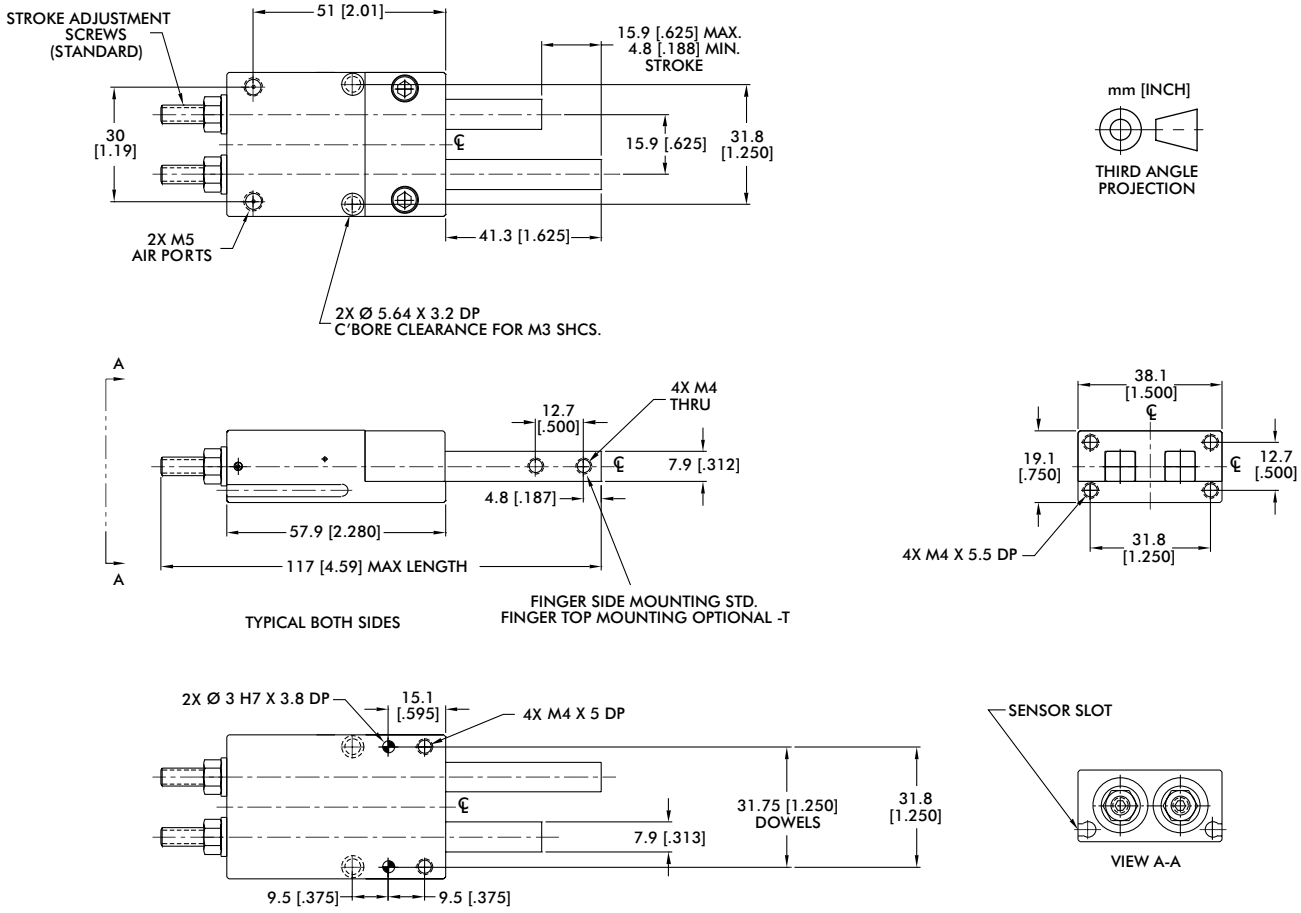

Seal Repair Kits	Order #
Buna-N Seal Repair Kit	SLKT-110
Viton® Seal Repair Kit	SLKT-110V

Loading Information

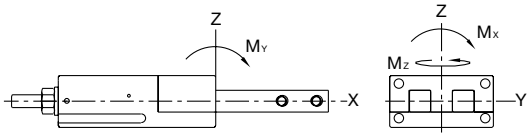

RFE-11M	Static
Maximum Moment **Mx**	6 Nm [50 in-lbs]
Maximum Moment **My**	6 Nm [50 in-lbs]
Maximum Moment **Mz**	6 Nm [50 in-lbs]

Cylinder Thrust Force

RFE-11M	Static
Thrust Force @ **7 bar [100psi]**	111 N [25 lbs]
Thrust Force @ **5.5 bar [80 psi]**	88 N [25 lbs]
Thrust Force @ **4 bar [60 psi]**	66 N [15 lbs]
Thrust Force @ **2.7 bar [40 psi]**	44 N [10 lbs]
Thrust Force @ **1.4 bar [20 psi]**	22 N [5 lbs]

RFE-12M

Feed Escapements | Dimensions and Technical Specifications

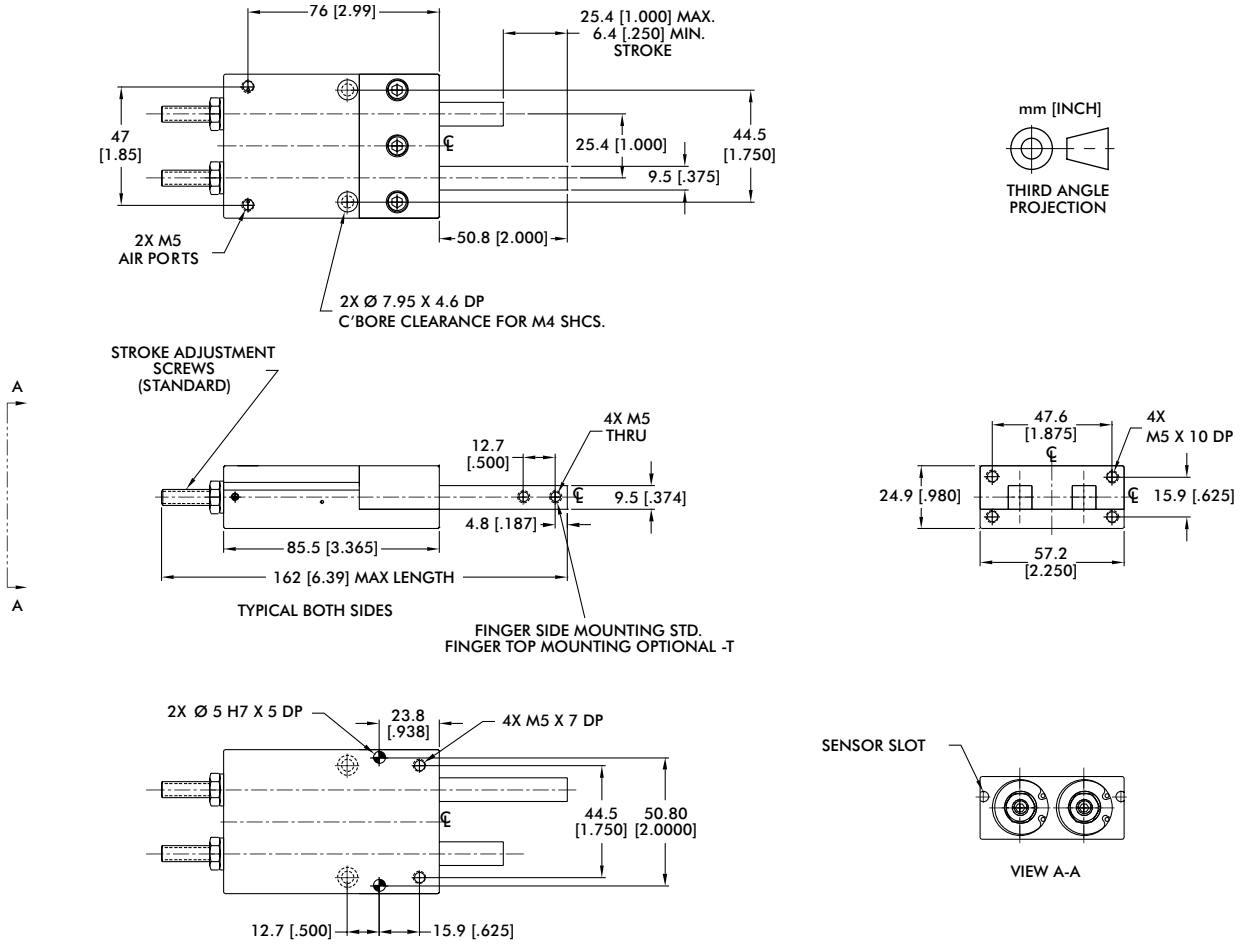

Seal Repair Kits	Order #
Buna-N Seal Repair Kit	SLKT-111
Viton® Seal Repair Kit	SLKT-111V

Loading Information

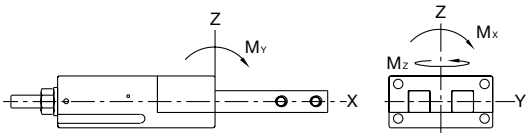

RFE-12M	Static
Maximum Moment **M_X**	17 Nm [150 in-lbs]
Maximum Moment **M_Y**	17 Nm [150 in-lbs]
Maximum Moment **M_Z**	17 Nm [150 in-lbs]

Cylinder Thrust Force

RFE-12M	Static
Thrust Force @ **7 bar [100psi]**	216 N [50 lbs]
Thrust Force @ **5.5 bar [80 psi]**	173 N [40 lbs]
Thrust Force @ **4 bar [60 psi]**	130 N [30 lbs]
Thrust Force @ **2.7 bar [40 psi]**	86 N [20 lbs]
Thrust Force @ **1.4 bar [20 psi]**	43 N [10 lbs]

Dimensions and technical information are subject to change without notice

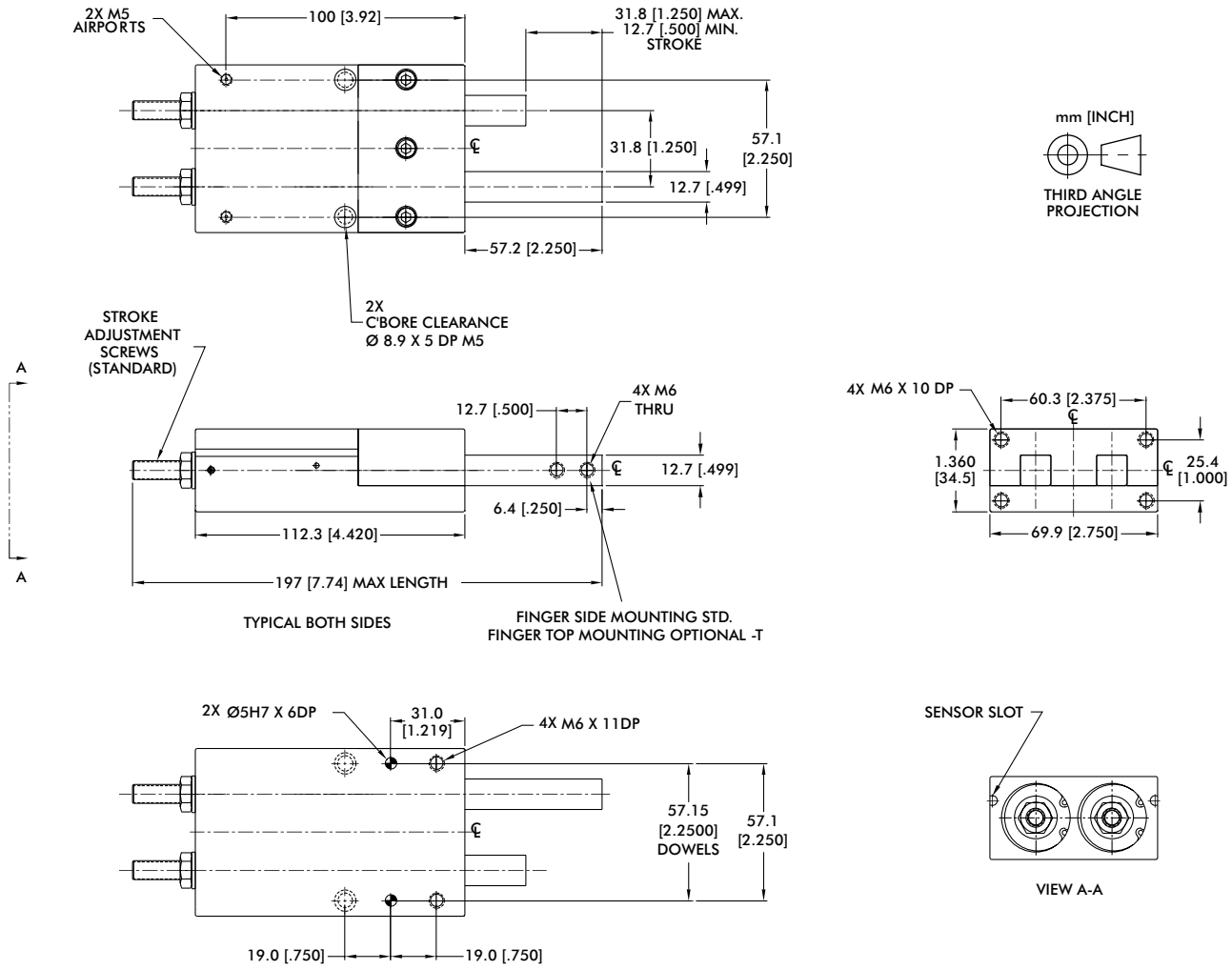

Seal Repair Kits	Order #
Buna-N Seal Repair Kit	SLKT-112
Viton® Seal Repair Kit	SLKT-112V

Loading Information

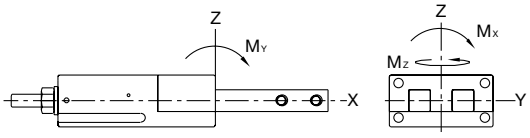

RFE-13M	Static
Maximum Moment **Mx**	28 Nm [250 in-lbs]
Maximum Moment **My**	28 Nm [250 in-lbs]
Maximum Moment **Mz**	28 Nm [250 in-lbs]

Cylinder Thrust Force

RFE-13M	Static
Thrust Force @ **7 bar [100psi]**	394 N [88 lbs]
Thrust Force @ **5.5 bar [80 psi]**	315 N [71 lbs]
Thrust Force @ **4 bar [60 psi]**	236 N [53 lbs]
Thrust Force @ **2.7 bar [40 psi]**	157 N [35 lbs]
Thrust Force @ **1.4 bar [20 psi]**	78 N [17 lbs]

RN SERIES

Feed Escapements | Features and Benefits | How To Order | Technical Specifications

Features:

- Non-rotating square shaft maintains proper finger alignment
- Sealed design with adjustable retract stops
- Use independent or in tandem with other RN units
- Use in small load thruster applications
- Unit can be mounted using top, bottom or face surface



Applications:

- Conveying part separator
- Part quality ejector
- Feeder track overload guarding

How To Order

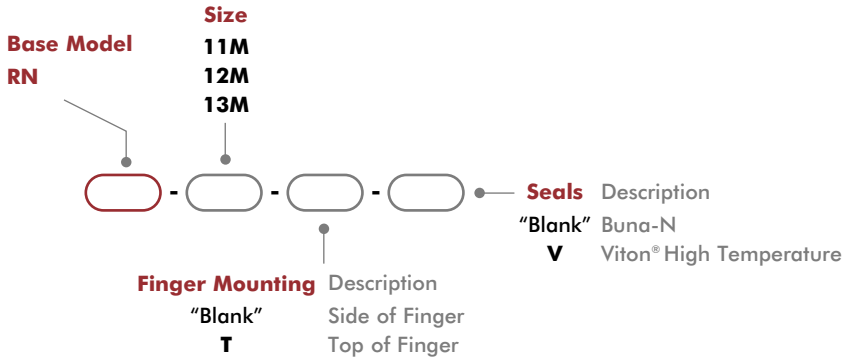

Accessories

Sensor Accessories	Model Numbers	Part Number	Qty/Unit
NPN Hall Effect Sensor with Quick Disconnect*	All Models	OHSN-006	1-2
PNP Hall Effect Sensor with Quick Disconnect*	All Models	OHSP-006	1-2
Quick Disconnect 2 Meter Cable Length*	All Models	CABL-010	1-2
Quick Disconnect 5 Meter Cable Length*	All Models	CABL-013	1-2

Pneumatic Accessories	Model Numbers	Part Number	Qty/Unit
M5 Adjustable Flow Control	All Models	VLVF-008	1-2

*Sensor and cable sold separately.

Specifications

Specifications	Units	11M	12M	13M
Thrust Force @ Maximun PSI	N [lbs]	111 [25]	222 [50]	400 [90]
Stroke	mm [in]	15.88 [0.625]	25.40 [1.000]	31.75 [1.250]
Stroke Adjustability	mm [in]	11 [0.44]	19 [0.75]	19 [0.75]
Weight	kg [lb]	0.09 [0.19]	0.19 [0.42]	0.41 [0.90]
Pressure Range	bar [psi]	3-7 [40-100]		
Cylinder Bore Ø	mm [in]	14.30 [0.563]	20 [0.787]	27 [1.063]
Rod Ø	mm [in]	6.35 [0.250]	7.95 [0.313]	9.52 [0.375]
Displacement	cm^3 [in^3]	1.3 [0.078]	4.0 [0.224]	9.1 [0.554]
Temperature Range (Buna-N seals)	°C [°F]	-35°~80° [-30°~180°]		
Temperature Range (Viton® seals)	°C [°F]	-30°~150° [-20°~300°]		
Actuation	sec	0.14	0.21	0.28
Valve to Actuate		4-way, 2-position		

Dimensions and technical information are subject to change without notice

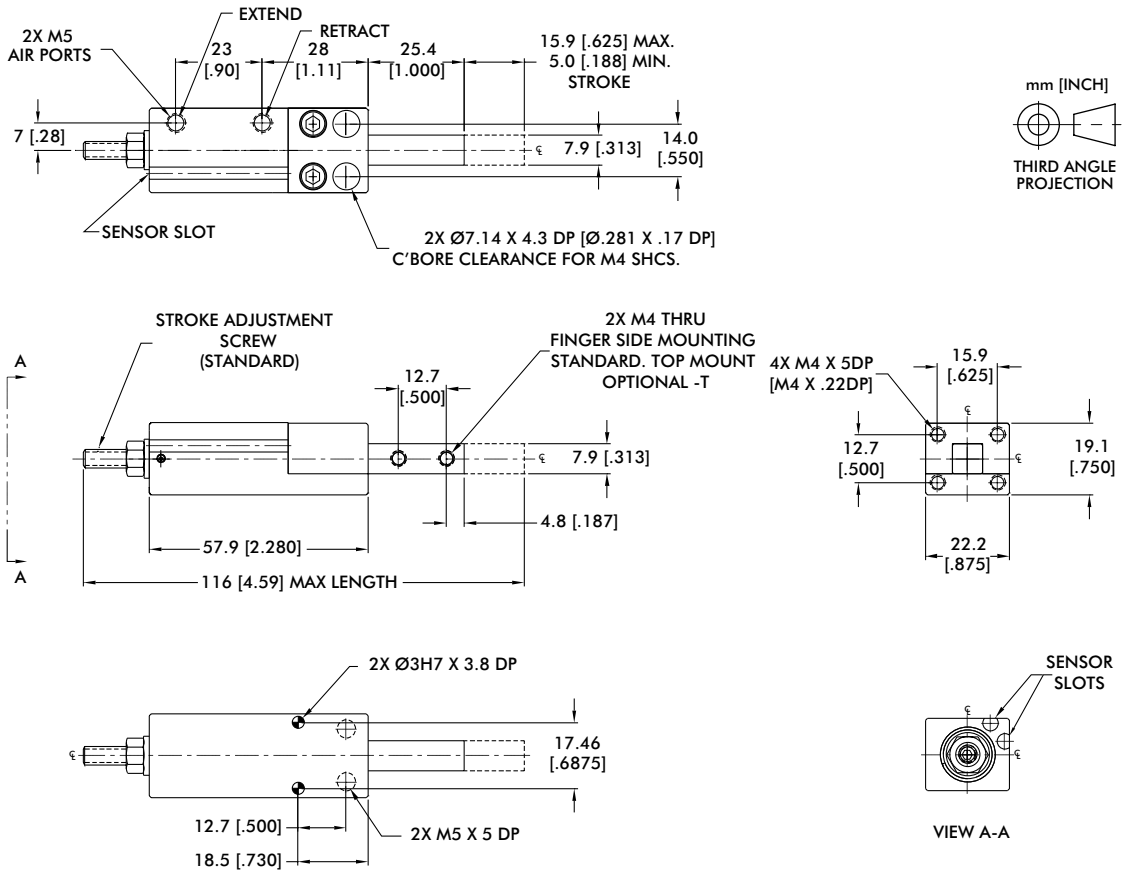

Seal Repair Kits	Order #
Buna-N Seal Repair Kit	SLKT-114
Viton® Seal Repair Kit	SLKT-114V

Loading Information

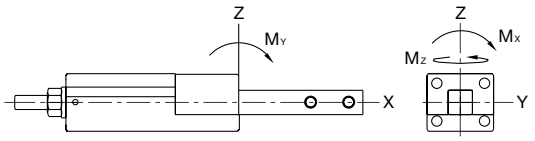

RN-11M	Static
Maximum Moment **Mx**	[50 in-lbs] 6 Nm
Maximum Moment **My**	[50 in-lbs] 6 Nm
Maximum Moment **Mz**	[50 in-lbs] 6 Nm

Cylinder Thrust Force

RN-11M	Extend	Retract
Thrust Force @ **7 bar [100psi]**	111 N [25 lbs]	89 N [20 lbs]
Thrust Force @ **5.5 bar [80 psi]**	88 N [20 lbs]	71 N [16 lbs]
Thrust Force @ **4 bar [60 psi]**	66 N [15 lbs]	53 N [12 lbs]
Thrust Force @ **2.7 bar [40 psi]**	44 N [10 lbs]	35 N [8 lbs]
Thrust Force @ **1.4 bar [20 psi]**	22 N [5 lbs]	18 N [4 lbs]

RN-12M

Feed Escapements | Dimensions and Technical Specifications

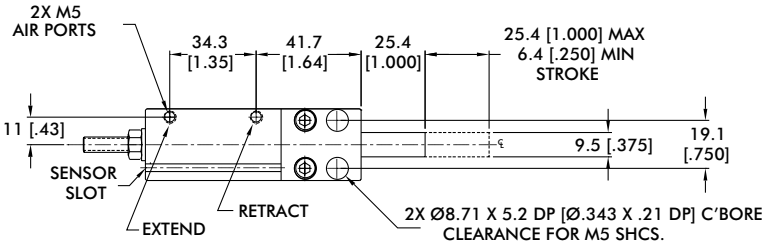

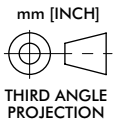

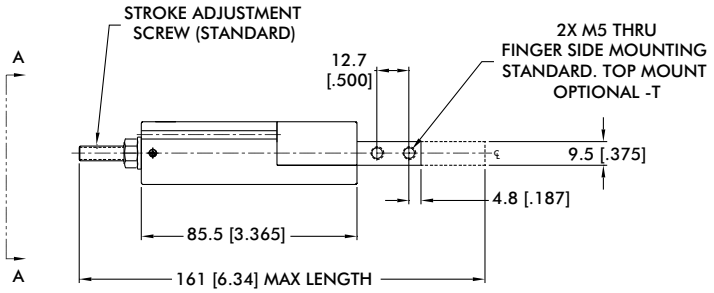

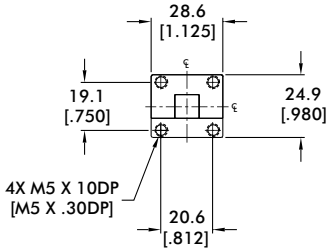

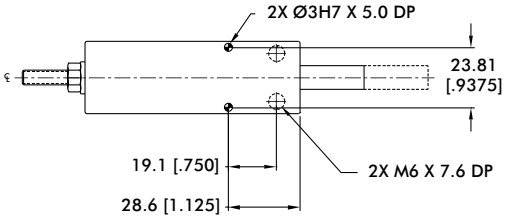

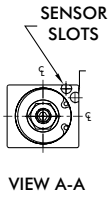

Seal Repair Kits	Order #
Buna-N Seal Repair Kit	SLKT-115
Viton® Seal Repair Kit	SLKT-115V

Loading Information

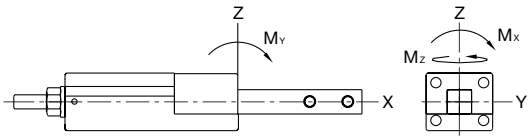

RN-12M	Static
Maximum Moment **Mx**	17 Nm [150 in-lbs]
Maximum Moment **My**	17 Nm [150 in-lbs]
Maximum Moment **Mz**	17 Nm [150 in-lbs]

Cylinder Thrust Force

RN-12M	Extend	Retract
Thrust Force @ **7 bar**	217 N [49 lbs]	182 N [41 lbs]
Thrust Force @ **5.5 bar**	173 N [39 lbs]	146 N [33 lbs]
Thrust Force @ **4 bar**	130 N [29 lbs]	110 N [24 lbs]
Thrust Force @ **2.7 bar**	87 N [19 lbs]	73 N [16 lbs]
Thrust Force @ **1.4 bar**	43 N [10 lbs]	36 N [8 lbs]

Dimensions and technical information are subject to change without notice

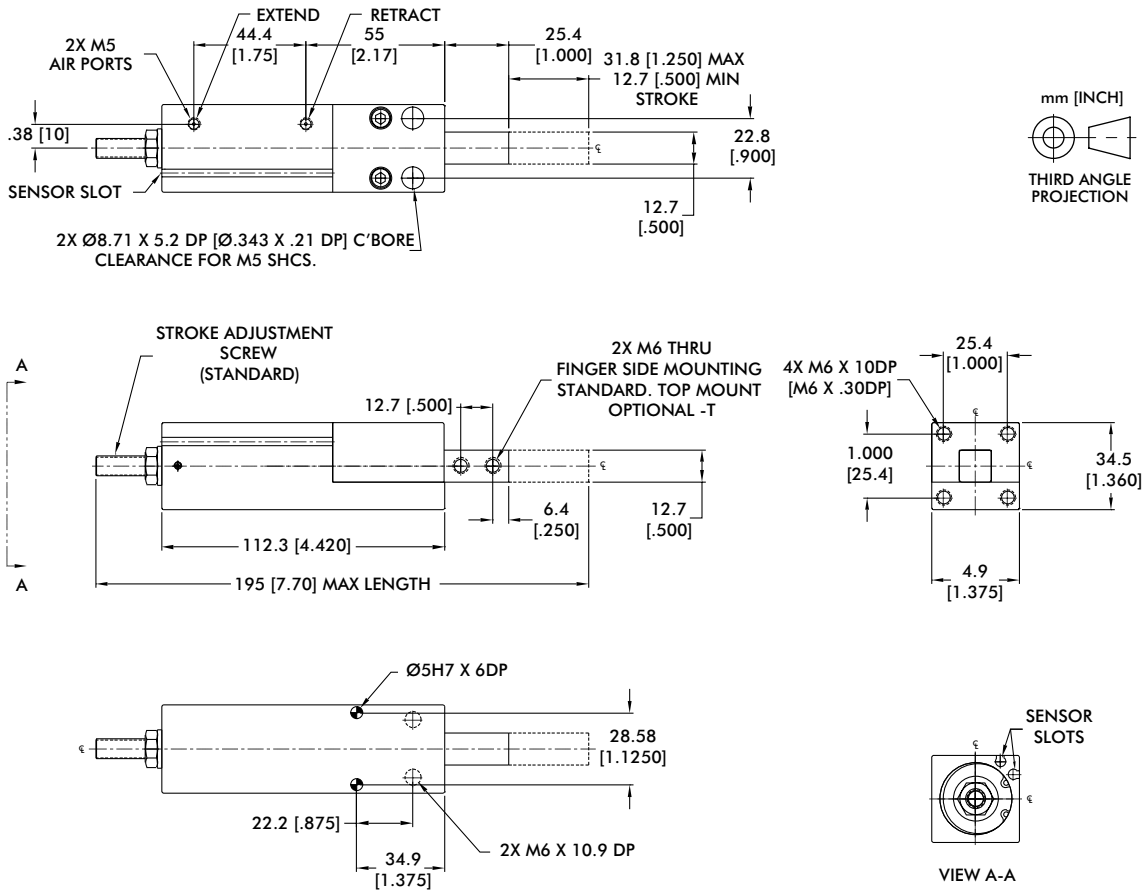

Seal Repair Kits	Order #
Buna-N Seal Repair Kit	SLKT-116
Viton® Seal Repair Kit	SLKT-116V

Loading Information

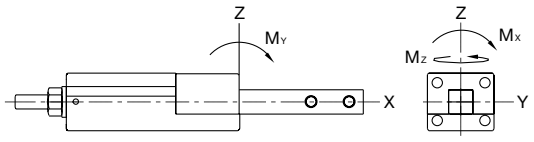

RN-13M	Static
Maximum Moment **M_X**	28 Nm [250 in-lbs]
Maximum Moment **M_Y**	28 Nm [250 in-lbs]
Maximum Moment **M_Z**	28 Nm [250 in-lbs]

Cylinder Thrust Force

RN-13M	Extend	Retract
Thrust Force @ **7 bar**	394 N [88 lbs]	345 N [77 lbs]
Thrust Force @ **5.5 bar**	315 N [71 lbs]	276 N [62 lbs]
Thrust Force @ **4 bar**	236 N [53 lbs]	207 N [46 lbs]
Thrust Force @ **2.7 bar**	157 N [35 lbs]	138 N [31 lbs]
Thrust Force @ **1.4 bar**	78 N [18 lbs]	69 N [15 lbs]

PRECISION INDEXING SOLUTIONS

Features and Benefits

The **CAMCO RDM Series** is a line of cam-operated rotary index drives, designed to move a wide array of products and components smoothly and with precision. Preloaded for no backlash, they have the capacity for handling high loads and speeds with controlled acceleration and deceleration for repeatable, accurate positioning.

- High precision, hardened cams available in standard and special motions
- Superior accuracy at the working radius when compared to a traditional indexer
- Sealed 4-point contact output bearing and large cam followers for superior accuracy and load capacity
- 60 Station capacity, ideal for multi-part automatic assembly machines
- Center through hole accommodates machine utilities
- Servo-driven solutions available for complex or variable indexing profiles
- Optional Output Overload Clutch available



Application Examples

Cycle on Demand Indexer with Fixed Number of Stations

- RDM indexer with user controlled variable dwell time
- Single index cycle with user controlled variable dwell time
- Index time is controlled by varying frequency setting of inverter drive
- 60 or 30 indexing cycles per minute using an AC or DC motor and drive respectively
- Increased productivity cycle rates with an Output Clutch-Brake option

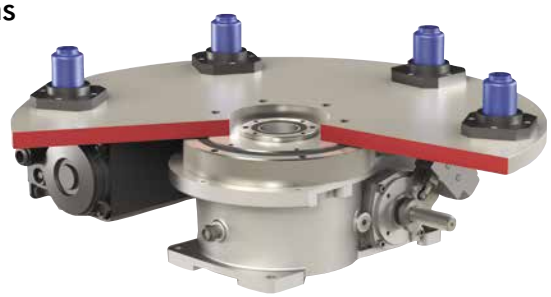

Cambot Flexible Pick and Place Solutions

- Servo driven indexer supporting high moment capacity payloads
- Large output flange for mounting a custom end-effector solution
- Integrate Destaco's versatile grippers, slides and vacuum products for pick and place actuation



Dimensions and technical information are subject to change without notice

CAMCO XPRESS PROGRAM

601RDM and 902RDM Series

Destaco continues to offer excellent service to our customers by providing the most common models of our **Camco RDM Series** as fast as you need them.

XPRESS 5DAY

Base Models



601RDM
Load Capacity:
Radial: **945 lbs**
Thrust/Axial: **2360 lbs**



902RDM
Load Capacity:
Radial: **3540 lbs**
Thrust/Axial: **7000 lbs**
with Standard Torque and Detector Plate Settings

Please contact your Destaco Camco Sales Team to learn more features of the RDM Series and details of the Xpress Program.



Stops

(M)601RDM



(M)902RDM



Motion



Reducer



601RDM
R180 DE
R225 SE



902RDM
R225 SE

Ratio

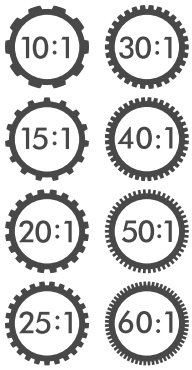

Motor



601RDM
W/0.33HP
230/460V
or 90/180V
DC Motor

902RDM
W/1HP, 56C
230/460V
or 90/180V
DC Motor

Optional Controller



Allen Bradley
PowerFlex 523 / 525

(Allen Bradley, PowerFlex are registered brands of Rockwell Automation)



Camco Vari-Pak

Clutch

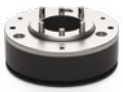

(M)4.0D



(M)7.8D

RDM SERIES

Rotary Index Drive | How To Order

Base Model*

Imperial	Metric	Option Tables Page #
N/A	80RDM	5
601RDM	M601RDM	11
902RDM	M902RDM	17
N/A	1100RDM	23
1305RDM	M1305RDM	29
1800RDM	M1800RDM	35

*Right Hand Cam only

Index Mounting (See Figure 1)
1 2 3 4 5 6

Reducer/Motor (Table 1)
Note: Set Reducer Mounting option to 0 when Reducer/Motor option is 0000.

Reducer Mounting (See Figure 2)
0 = No Reducer
A J B K C L D M E N F P G R H S

Cycling Sensor (See Figure 3) Description
0 = No Sensors
A Single Cam w/PNP Prox
B Single Cam w/NPN Prox
C Dual Cam w/PNP Prox
D Dual Cam w/NPN Prox
E Single Cam/Prox Bracket
F Dual Cam/Prox Bracket
G Single Cam, w/Mech LS
H Dual Cam, w/Mech LS

601RDM - C - 1 - P - RM2E - 000 - C - L - A - 40EA - A02

Motion Description
A 2-Stop-330
B 3-Stop-330
C 4-Stop-270
D 4-Stop-330
E 6-Stop-270
F 6-Stop-330
G 8-Stop-270
H 8-Stop-330
I 12-Stop-270
J 12-Stop-330
K 16-Stop-270
L 16-Stop-330
M 8:1 Constant-Lead
N 12:1 Constant-Lead
P 16:1 Constant-Lead
R* 24:1 Constant-Lead
*Models 601, 902, 1100 only.

Center Post

	Code	Description
All Sizes	0	= No Reducer
	P	Center Post
902 1100 1305	T	Tool Plate Mounting Holes
	B	Center Post + Tool Plate Mounting Holes


No Center Post Options 0 and T


Center Post Options P and B

Motor Brake Settings (Table 2)

Reducer Gear Ratio (Table 3)

Output Clutch (Table 4)

Motor Control (Table 5)



Input Shaft Configuration/Rotation

Relative Rotation for Right Hand Cam:

Side 1: CW Input, CCW Output

Side 2: CCW input, CW Output

NOTE: Input can be driven in either direction. Reducer, Motor and adapter plates can be mounted on either side 1 or side 2 to drive input.

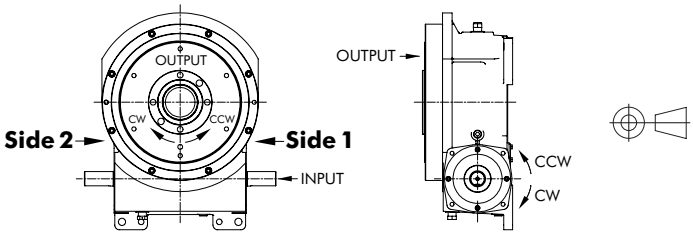

Index Mounting (Figure 1)

OVOI (output vertical, over input)	OVUI (output vertical, under input)	OHOI (output horizontal, over input)	OHUI (output horizontal, under input)	H-S1-UP (output horizontal, side 1 up)	H-S2-UP (output horizontal, side 2 up)
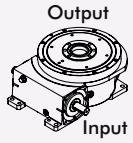 1	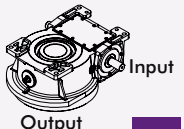 2	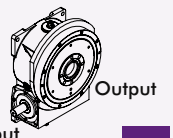 3	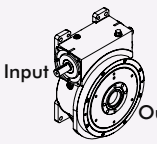 4	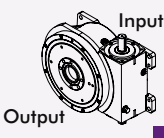 5	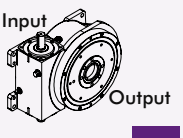 6

Other Motions (stops and index periods) available. Contact your DESTACO sales representative for more information.

Gear Reducer Mounting Positions (Figure 2)

Mounting "A"

	Right Hand	Left Hand
SIDE 1	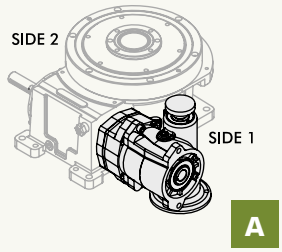	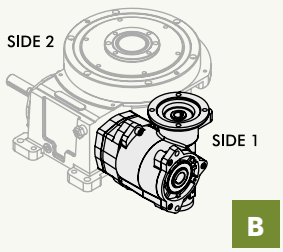
SIDE 2	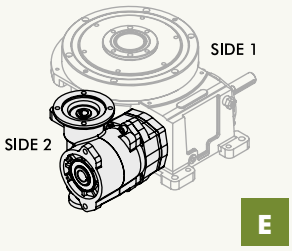	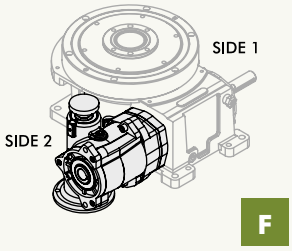

Mounting "B"

	Right Hand	Left Hand
SIDE 1	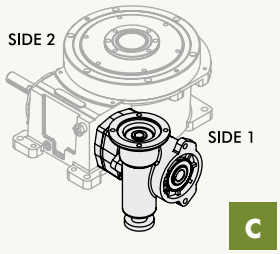	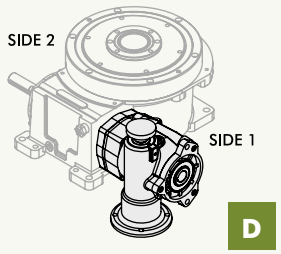
SIDE 2	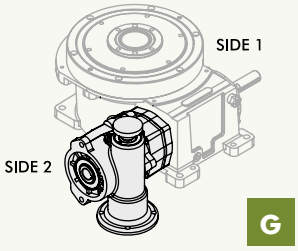	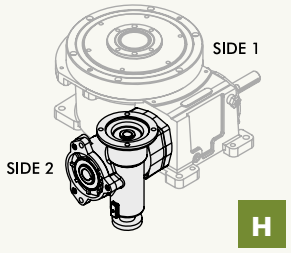

Mounting "C"

	Right Hand	Left Hand
SIDE 1	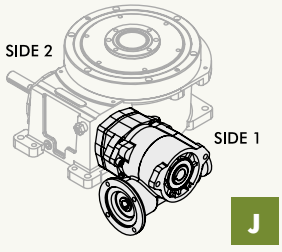	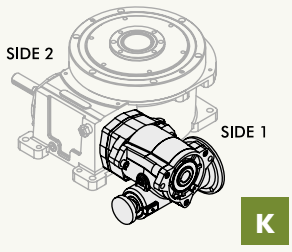
SIDE 2	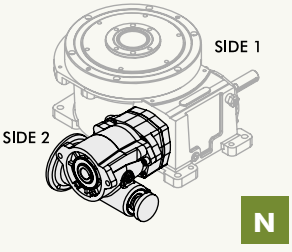	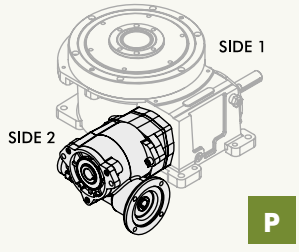

Mounting "D"

	Right Hand	Left Hand
SIDE 1	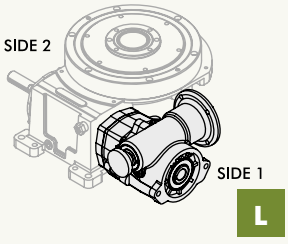	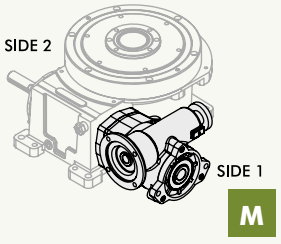
SIDE 2	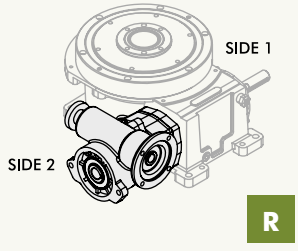	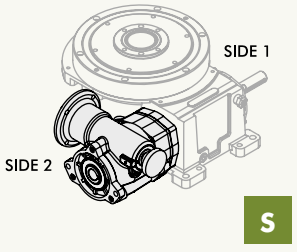

Cycling Sensor Options (Figure 3)

Single Cam with (**A**) PNP or (**B**) NPN Proximity Sensor	Dual Cam with (**A**) PNP or (**B**) NPN Proximity Sensor	Single Cam with Proximity Sensor Bracket	Dual Cam with Proximity Sensor Bracket	Single Cam with Mechanical Limit Switch	Dual Cam with Mechanical Limit Switch
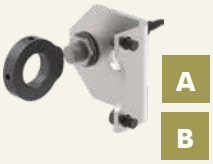	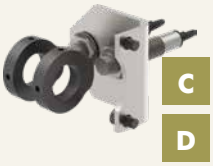				

80RDM SERIES

Rotary Index Drive | How To Order

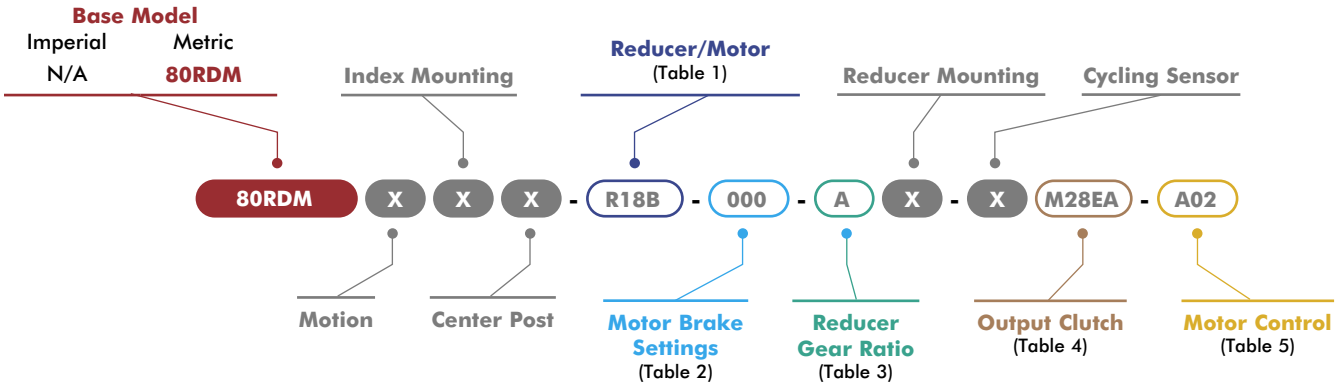

X = See Page 3 for option information.

1 Reducer/Motor Options

Code	Description
0000	No Reducer or Motor*
	R180 Motors
R18X	R180 Adapter only*
R18A	R180 Reducer
R18B	R180 Reducer with 0.33HP 230/460V AC Motor
R18C	R180 Reducer with 0.33HP 90V DC Motor
R18D	R180 Reducer with 0.33HP 180V DC Motor
	STM RMI-28/40 Motors
RM1A	RMI-28 Adapter only*
RM1B	STM RMI-28/LFB/IEC56-B14 Reducer
RM1C	STM RMI-28/LFB with 0.09kW Motor
RM2A	RMI-40 Adapter only*
RM2B	STM RMI-40/LFB/IEC63-B14 Reducer
RM2C	STM RMI-40/LFB/IEC71-B14 Reducer
RM2D	STM RMI-40/LFB with 0.18kW Motor
RM2E	STM RMI-40/LFB with 0.25kW Motor

*All Reducer/Motor adapters require Gear Ratio option to be 0.

2 Motor Brake

Code	Description
000	No Brake

3 Reducer Gear Ratios*

Code	Description	
	R180	STM RMI-28/40
0	N/A	N/A
A	10:1	10:1
B	15:1	15:1
C	20:1	20:1
D	25:1	28:1
E	30:1	40:1
F	40:1	49:1
G	50:1	56:1
H	60:1	70:1

*All Reducer/Motor adapters require Gear Ratio option to be 0.

Select Gear ratio column based on the reducer type selected.

4 Output Clutch & Settings

80RDM Metric Clutch Models

Code	Description
0000	No Output Overload Clutch
M28DA	M2.8D W/54 Nm, Standard*
M28DB	M2.8D W/96 Nm, Standard*
M28DC	M2.8D W/147 Nm, Standard*
M28DD	M2.8D W/249 Nm, Standard*
M28DE	M2.8D W/350 Nm, Standard*
M28DF	M2.8D W/45 Nm, Standard*
M28DG	M2.8D W/79 Nm, Standard*
M28DH	M2.8D W/124 Nm, Standard*
M28DJ	M2.8D W/203 Nm, Standard*
M28DK	M2.8D W/54 Nm, Thru-Hole
M28DL	M2.8D W/96 Nm, Thru-Hole
M28DM	M2.8D W/147 Nm, Thru-Hole
M28DN	M2.8D W/249 Nm, Thru-Hole
M28DP	M2.8D W/350 Nm, Thru-Hole
M28DQ	M2.8D W/45 Nm, Thru-Hole
M28DR	M2.8D W/79 Nm, Thru-Hole
M28DS	M2.8D W/124 Nm, Thru-Hole
M28DT	M2.8D W/203 Nm, Thru-Hole
M28EA	M2.8D W/54 Nm, Standard, EZ*
M28EB	M2.8D W/96 Nm, Standard, EZ*
M28EC	M2.8D W/147 Nm, Standard, EZ*
M28ED	M2.8D W/249 Nm, Standard, EZ*
M28EE	M2.8D W/350 Nm, Standard, EZ*
M28EF	M2.8D W/45 Nm, Standard, EZ*
M28EG	M2.8D W/79 Nm, Standard, EZ*
M28EH	M2.8D W/124 Nm, Standard, EZ*
M28EJ	M2.8D W/203 Nm, Standard, EZ*
M28EK	M2.8D W/54 Nm, Thru-Hole, EZ
M28EL	M2.8D W/96 Nm, Thru-Hole, EZ
M28EM	M2.8D W/147 Nm, Thru-Hole, EZ
M28EN	M2.8D W/249 Nm, Thru-Hole, EZ
M28EP	M2.8D W/350 Nm, Thru-Hole, EZ
M28EQ	M2.8D W/45 Nm, Thru-Hole, EZ
M28ER	M2.8D W/79 Nm, Thru-Hole, EZ
M28ES	M2.8D W/124 Nm, Thru-Hole, EZ
M28ET	M2.8D W/203 Nm, Thru-Hole, EZ

*Cannot be used with center post option P

5 Motor Control

Code	Description	
000	NO MOTOR CONTROL	
A01	(AC) PowerFlex 523 1HP	120V 1Ph
A02		240V 1Ph
A03		480V 3Ph
A04	(AC) PowerFlex 525 1HP	120V 1Ph
A05		240V 1Ph
A06		480V 3Ph
D01	(DC) Varipak 1HP 90VDC	Uni-Directional
D02		Bi-Directional
D03	(DC) Varipak 2HP 180VDC	Uni-Directional
D04		Bi-Directional

Maximum Inertia x 1000 kg-cm² [lb-in²] for standard package							
Stops	Motion Time [seconds]						
	0.458	0.611	0.764	0.917	1.222	1.528	1.833
2	0 [0]	3 [1]	6 [2]	15 [5]	29 [10]	47 [16]	67 [23]
3	3 [1]	9 [3]	20 [7]	32 [11]	61 [21]	94 [32]	138 [47]
4	6 [2]	18 [6]	38 [13]	67 [23]	135[46]	217 [74]	304 [104]
6	15 [5]	38 [13]	82 [28]	126 [43]	246 [84]	401 [137]	559 [191]
8	20 [7]	44 [15]	73 [25]	114 [39]	222 [76]	372 [127]	559 [191]
12	50 [17]	99 [34]	167 [57]	258 [88]	497 [170]	559 [191]	559 [191]
16	47 [16]	91 [31]	152 [52]	231 [79]	448 [153]	559 [191]	559 [191]
Reducer Ratio							
	15	20	25	30	40	50	60

Contact your DESTACO sales representative for more information.

Features

- R180 Reducer (Ratios from 15:1 to 60:1)
  - Double Extended Worm Shaft (Input)
  - Worm Shaft Handwheel
- Double Extended Camshaft (Input Shaft)
- Center Thru Hole (Ø70 mm [Ø2.76 in.])
- 1/3 HP AC Drive Package with Inverter Duty Motor and IM-pAC AC Drive (up to 60 cpm)
- Cycle Cam and Limit Switch Mounted to Camshaft
- Right Hand Cam
- Universal Mounting Capability

Output Load Capacity (loads carried during index):

Radial	3358 N [755 lbs]
Thrust/Axial	8385 N [1885 lbs]
Moment	213 N-m [1885 in-lb]

Typical Application Dial Diameter: 203 mm [8 in] to 711 mm [28 in]

Accuracy ±44 arcsec / ±0,08 mm [±.003in] at 355,6 mm [14in] Radius

Repeatability ±11 arcsec / ±0,018 mm [±.0007in] at 355,6 mm [14in] Radius

Optional Accessories

- 1/3 HP DC Motor
- Varipak DC Motor Control (up to 30 cpm)
- Output Mechanical Overload Clutch
  - See Page 9
- EZ Mount Dial Adapter
- Stationary Center Post
- Dual Cam and Limit Switch
- Electric Clutch-Brake
- Left Hand Cam

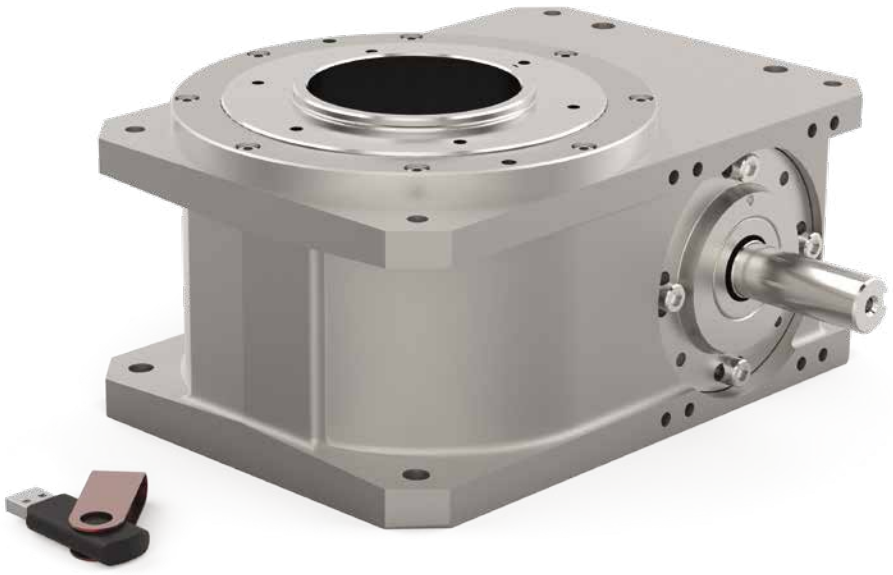

80RDM SERIES

Rotary Index Drive | Dimensions

mm [INCH]

THIRD ANGLE PROJECTION

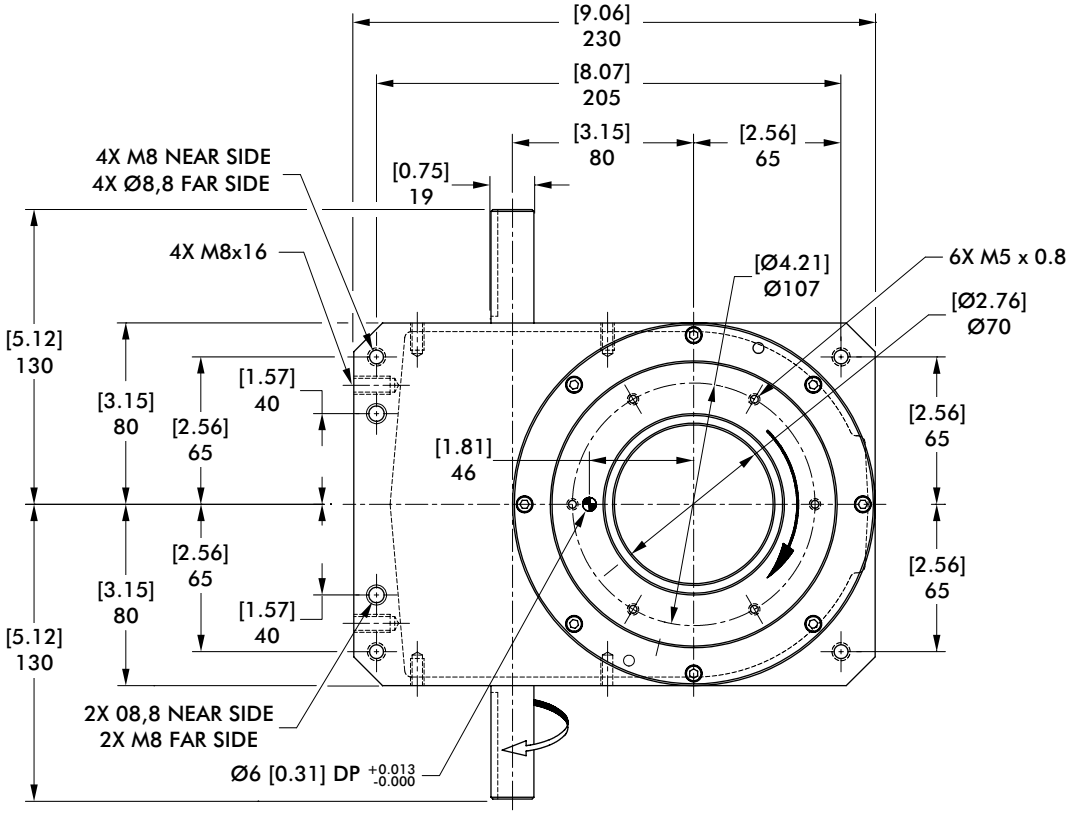

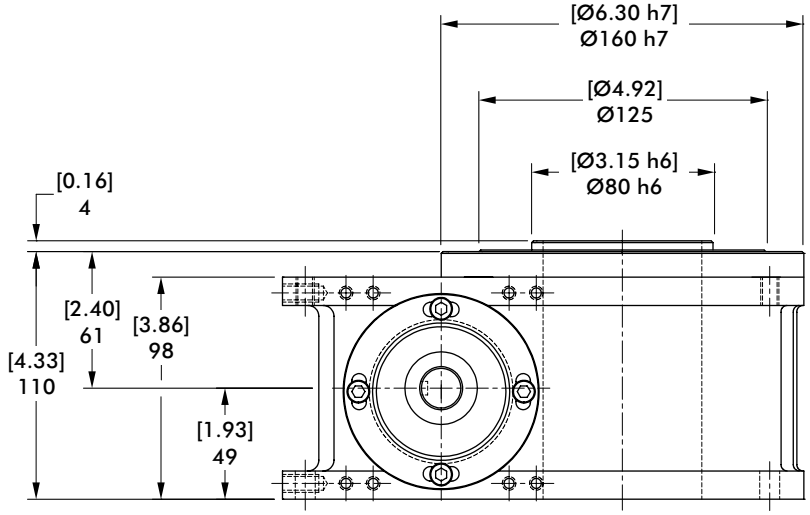

Dimensions and technical information are subject to change without notice

Proximity Switch

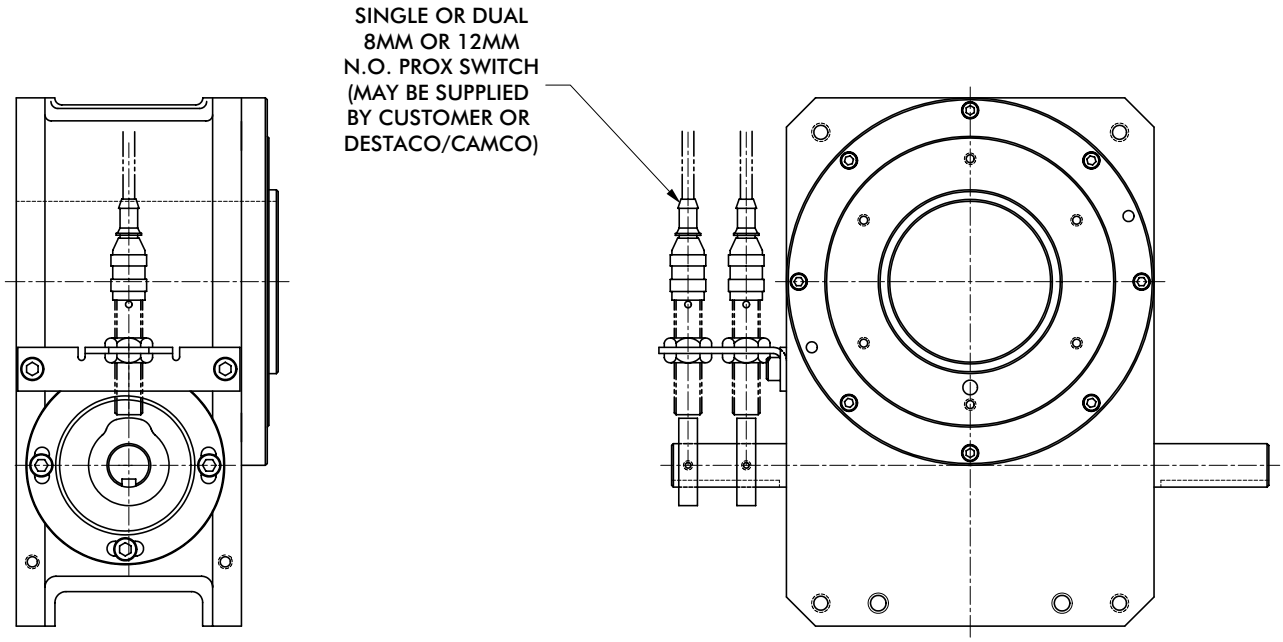

mm [INCH]

THIRD ANGLE PROJECTION

Center Post

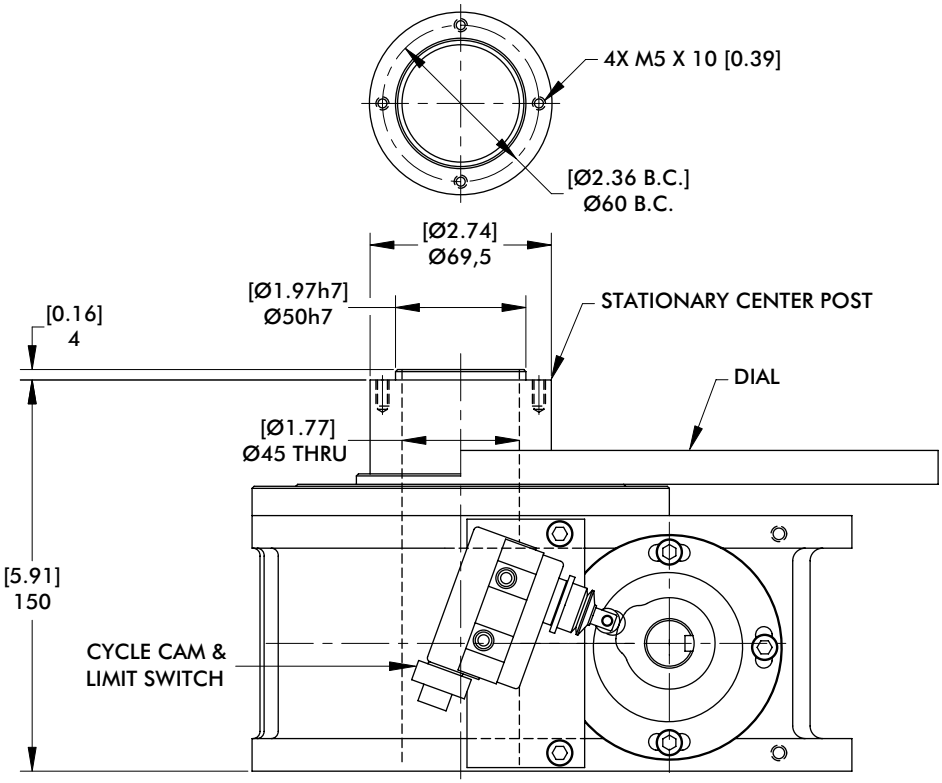

80RDM SERIES

Rotary Index Drive | Dimensions

2.8D Overload Clutch

THRU-HOLE CLUTCH

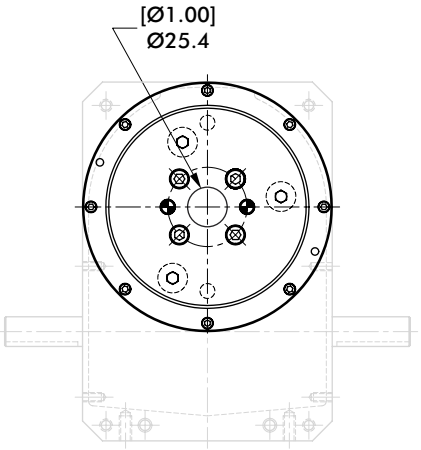

STANDARD CLUTCH

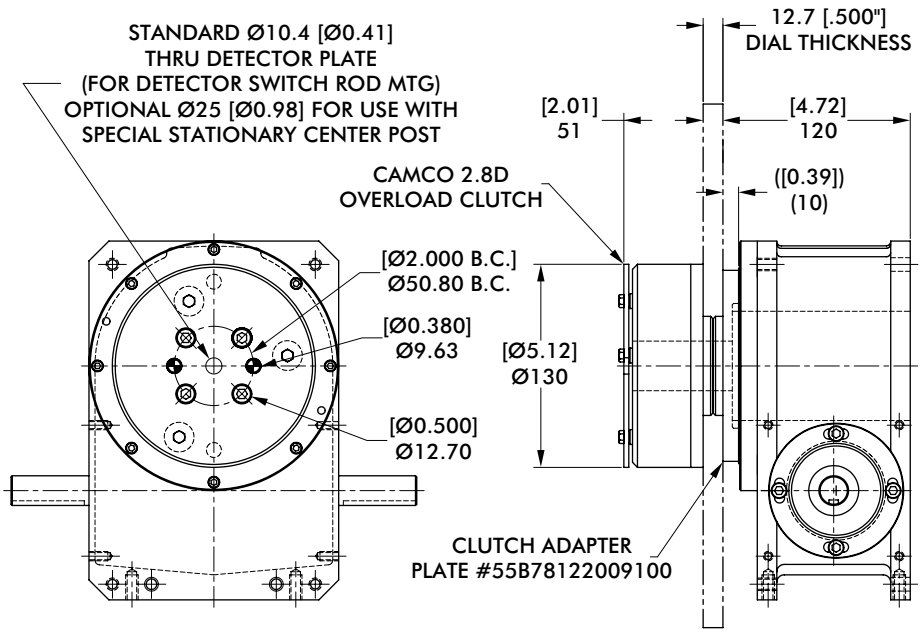

mm [INCH]

THIRD ANGLE PROJECTION

2.8D Overload Clutch with EZ Dial Mounting Adapter

THRU-HOLE EZ CLUTCH

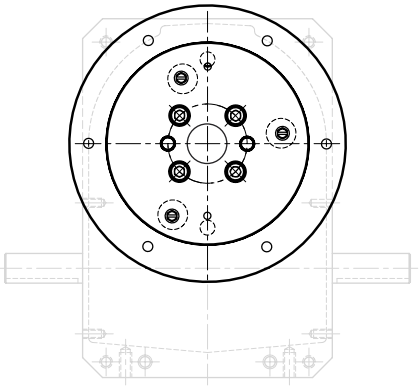

STANDARD EZ CLUTCH

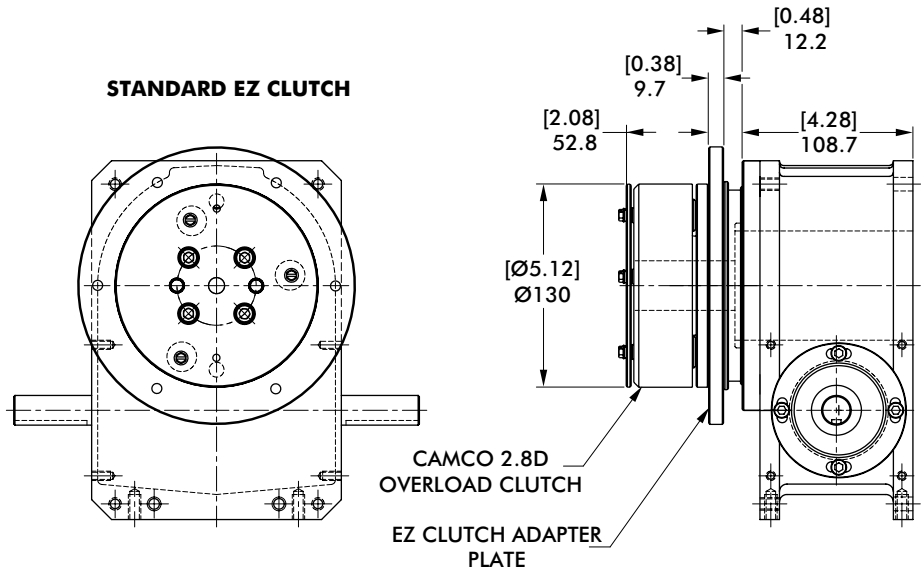

Model	Internal Inertia kg-m² [lb-in²]	Torque Setting N-m [in-lb]
2.8D	0,0085 [29]	45, 54, 79, 96, 124, 147, 203, 249, 350 [400, 480, 700, 850, 1100, 1300, 1800, 2200, 3100]

Notes

601RDM SERIES

Rotary Index Drive | How To Order

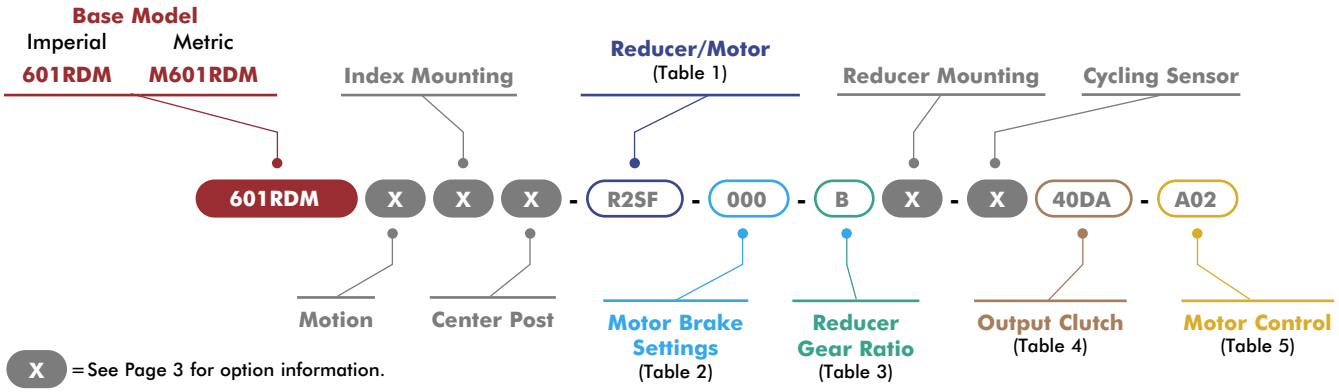

X = See Page 3 for option information.

1 Reducer/Motor Options

Code	Description
0000	No Reducer or Motor*
	R180/R225 Motors
R18X	R180 Adapter only*
R18A	R180 Reducer
R18B	R180 Reducer with 0.33HP 230/460V AC Motor
R18C	R180 Reducer with 0.33HP 90V DC Motor
R18D	R180 Reducer with 0.33HP 180V DC Motor
R2XX	R225 Adapter only*
R2SA	R225 Reducer 56 ADAPTER & CPLG, Single Extended Worm
R2SB	R225 Reducer 145TC ADAPTER & CPLG, Single Extended Worm (No Motor)
R2SC	R225 Reducer with 0.5HP 56C 230/460V AC Motor, Single Extended Worm
R2SD	R225 Reducer with 1.0HP 56C 230/460V AC Motor, Single Extended Worm
R2SE	R225 Reducer with 1.0HP 56C 90V DC Motor, Single Extended Worm
R2SF	R225 Reducer with 1.0HP 56C 180V DC Motor, Single Extended Worm
R2DA	R225 Reducer 56 ADAPTER & CPLG, Double Extended Worm
R2DB	R225 Reducer 145TC ADAPTER & CPLG, Double Extended Worm (No Motor)
R2DC	R225 Reducer with 0.5HP 56C 230/460V AC Motor, Double Extended Worm
R2DD	R225 Reducer with 1.0HP 56C 230/460V AC Motor, Double Extended Worm
R2DE	R225 Reducer with 1.0HP 56C 90V DC Motor, Double Extended Worm
R2DF	R225 Reducer with 1.0HP 56C 180V DC Motor, Double Extended Worm
	SEW KH37 Motors
SW1A	KH37 Adapter only*
SW1B	SEW KH37DRS71S4 0.25Kw Motor (60Hz, 230/460V)
SW1C	SEW KH37DRS71S4 0.25Kw Motor (50Hz, 400V)
SW1D	SEW KH37DRS71S4 0.25Kw Motor (60Hz, 575V)
SW1E	SEW KH37DRS71S4 0.37Kw Motor (60Hz, 230/460V)
SW1F	SEW KH37DRS71S4 0.37Kw Motor (50Hz, 400V)
SW1G	SEW KH37DRS71S4 0.37Kw Motor (60Hz, 575V)
	STM RMI-40/50 Motors
RM2A	STM RMI-40 Adapter only*
RM2B	STM RMI-40 IEC63-B14 Reducer
RM2C	STM RMI-40 IEC71-B14 Reducer
RM2D	STM RMI-40 Reducer w/ 0.18kW Motor
RM2E	STM RMI-40 Reducer w/ 0.25kW Motor
RM3A	STM RMI-50 Adapter only*
RM3B	STM RMI-50 IEC71-B14 Reducer
RM3C	STM RMI-50 IEC80-B14 Reducer
RM3D	STM RMI-50 Reducer w/ 0.37kW Motor
RM3E	STM RMI-50 Reducer w/ 0.55kW Motor

*All Reducer/Motor adapters require Gear Ratio option to be 0.

2 Motor Brake*

Code	Description
000	No Brake
S1A	1.69 Nm (BE05)
S1B	2.49 Nm (BE05)
S1C	3.50 Nm (BE05)
S2A	4.97 Nm (BE1)
S2B	7.01 Nm (BE1)
S2C	9.94 Nm (BE1)

*SEW Motor brake setting options only. All other motors use option code 000.

3 Reducer Gear Ratios*

Code	Description		
	R180/225	SEW KH37	STM RMI-40/50
0	N/A	N/A	N/A
A	10:1	10.49:1	10:1
B	15:1	15.31:1	15:1
C	20:1	20.19:1	20:1
D	25:1	29.96:1	28:1
E	30:1	37.97:1	40:1
F	40:1	49.79:1	49:1
G	50:1	58.60:1	56:1
H	60:1	67.80:1	70:1

*All Reducer/Motor adapters require Gear Ratio option to be 0.

Select Gear ratio column based on the reducer type selected.

4 Output Clutch & Settings

601RDM Imperial Clutch Models

Code	Description
0000	No Output Overload Clutch
40DA	4.0D/420 In-Lb, Standard*
40DB	4.0D/620 In-Lb, Standard*
40DC	4.0D/750 In-Lb, Standard*
40DD	4.0D/1150 In-Lb, Standard*
40DE	4.0D/1750 In-Lb, Standard*
40DF	4.0D/2950 In-Lb, Standard*
40DG	4.0D/4000 In-Lb, Standard*
40DH	4.0D/420 In-Lb, Thru-Hole
40DJ	4.0D/620 In-Lb, Thru-Hole
40DK	4.0D/750 In-Lb, Thru-Hole
40DL	4.0D/1150 In-Lb, Thru-Hole
40DM	4.0D/1750 In-Lb, Thru-Hole
40DN	4.0D/2950 In-Lb, Thru-Hole
40DP	4.0D/4000 In-Lb, Thru-Hole
40EA	4.0D/420 In-Lb, Standard, EZ*
40EB	4.0D/620 In-Lb, Standard, EZ*
40EC	4.0D/750 In-Lb, Standard, EZ*
40ED	4.0D/1150 In-Lb, Standard, EZ*
40EE	4.0D/1750 In-Lb, Standard, EZ*
40EF	4.0D/2950 In-Lb, Standard, EZ*
40EG	4.0D/4000 In-Lb, Standard, EZ*
40EH	4.0D/420 In-Lb, Thru-Hole, EZ
40EJ	4.0D/620 In-Lb, Thru-Hole, EZ
40EK	4.0D/750 In-Lb, Thru-Hole, EZ
40EL	4.0D/1150 In-Lb, Thru-Hole, EZ
40EM	4.0D/1750 In-Lb, Thru-Hole, EZ
40EN	4.0D/2950 In-Lb, Thru-Hole, EZ
40EP	4.0D/4000 In-Lb, Thru-Hole, EZ

M601RDM Metric Clutch Models

Code	Description
0000	No Output Overload Clutch
M40DA	M4.0D/47 Nm, Standard*
M40DB	M4.0D/70 Nm, Standard*
M40DC	M4.0D/85 Nm, Standard*
M40DD	M4.0D/130 Nm, Standard*
M40DE	M4.0D/198 Nm, Standard*
M40DF	M4.0D/333 Nm, Standard*
M40DG	M4.0D/452 Nm, Standard*
M40DH	M4.0D/47 Nm, Thru-Hole
M40DJ	M4.0D/70 Nm, Thru-Hole
M40DK	M4.0D/85 Nm, Thru-Hole
M40DL	M4.0D/130 Nm, Thru-Hole
M40DM	M4.0D/198 Nm, Thru-Hole
M40DN	M4.0D/333 Nm, Thru-Hole
M40DP	M4.0D/452 Nm, Thru-Hole
M40EA	M4.0D/47 Nm, Standard, EZ*
M40EB	M4.0D/70 Nm, Standard, EZ*
M40EC	M4.0D/85 Nm, Standard, EZ*
M40ED	M4.0D/130 Nm, Standard, EZ*
M40EE	M4.0D/198 Nm, Standard, EZ*
M40EF	M4.0D/333 Nm, Standard, EZ*
M40EG	M4.0D/452 Nm, Standard, EZ*
M40EH	M4.0D/47 Nm, Thru-Hole, EZ
M40EJ	M4.0D/70 Nm, Thru-Hole, EZ
M40EK	M4.0D/85 Nm, Thru-Hole, EZ
M40EL	M4.0D/130 Nm, Thru-Hole, EZ
M40EM	M4.0D/198 Nm, Thru-Hole, EZ
M40EN	M4.0D/333 Nm, Thru-Hole, EZ
M40EP	M4.0D/452 Nm, Thru-Hole, EZ

*Cannot be used with center post option P.

5 Motor Control

Code	Description	
000	NO MOTOR CONTROL	
A01	(AC) PowerFlex 523 1HP	120V 1Ph
A02		240V 1Ph
A03		480V 3Ph
A04	(AC) PowerFlex 525 1HP	120V 1Ph
A05		240V 1Ph
A06		480V 3Ph
A07	(AC) PowerFlex 523 2HP	240V 3Ph
A08		480V 3Ph
A09	(AC) PowerFlex 525 2HP	240V 3Ph
A10		480V 3Ph
D01	(DC) Varipak 1HP 90VDC	Uni-Directional
D02		Bi-Directional
D03	(DC) Varipak 2HP 180VDC	Uni-Directional
D04		Bi-Directional

Dimensions and technical information are subject to change without notice

Maximum Inertia x 1000 kg-cm² [lb-in²] for standard package							
Stops	Motion Time [seconds]						
	0.458	0.611	0.764	0.917	1.222	1.528	1.833
2	0 [0]	3 [1]	6 [2]	15 [5]	32 [11]	50 [17]	70 [24]
3	3 [1]	9 [3]	20 [7]	35 [12]	82 [28]	123 [42]	170 [58]
4	6 [2]	18 [6]	38 [13]	67 [23]	152 [52]	228 [78]	310 [106]
6	15 [5]	41 [14]	82 [28]	149 [51]	328 [112]	492 [168]	667 [228]
8	29 [10]	73 [25]	149 [51]	263 [90]	582 [199]	875 [299]	1188 [406]
12	64 [22]	167 [57]	337 [115]	597 [204]	1314 [449]	1399 [478]	1399 [478]
16	117 [40]	296 [101]	600 [205]	1056 [361]	1399 [478]	1399 [478]	1399 [478]
Reducer Ratio							
	15	20	25	30	40	50	60

Other Motions (stops and index periods) available. Contact your DESTACO sales representative for more information.

Features

- R180 Reducer (Ratios from 15:1 to 60:1)
  - Double Extended Worm Shaft (Input)
  - Worm Shaft Handwheel
- Double Extended Camshaft (Input Shaft)
- Center Thru Hole (Ø44,45 [Ø1.75 in.])
- 1/3 HP AC Drive Package with Inverter Duty Motor and IM-pAC AC Drive (up to 60 cpm)
- Cycle Cam and Limit Switch Mounted to Camshaft
- Right Hand Cam

Output Load Capacity (loads carried during index):

Radial	4204 N [945 lbs]
Thrust/Axial	10498 N [2360 lbs]
Moment	373 N-m [3305 in-lb]

Typical Application Dial Diameter: 305 mm [12 in] to 914 mm [36 in]

Accuracy ±39 arcsec / ±0,08 mm [±.003in] at 457,2 mm [18in] Radius

Repeatability ±10 arcsec / ±0,023 mm [±.0009in] at 457,2 mm [18in] Radius

Optional Accessories

- 1/3 hp DC Motor
- Varipak DC Motor Control (up to 30 cpm)
- Output Mechanical Overload Clutch
  - See Page 15
- EZ Mount Dial Adapter
- Stationary Center Post
- Dual Cam and Limit Switch
- Relief in Dwell for shot-pin applications
- Left Hand Cam



601RDM SERIES

Rotary Index Drive | Dimensions

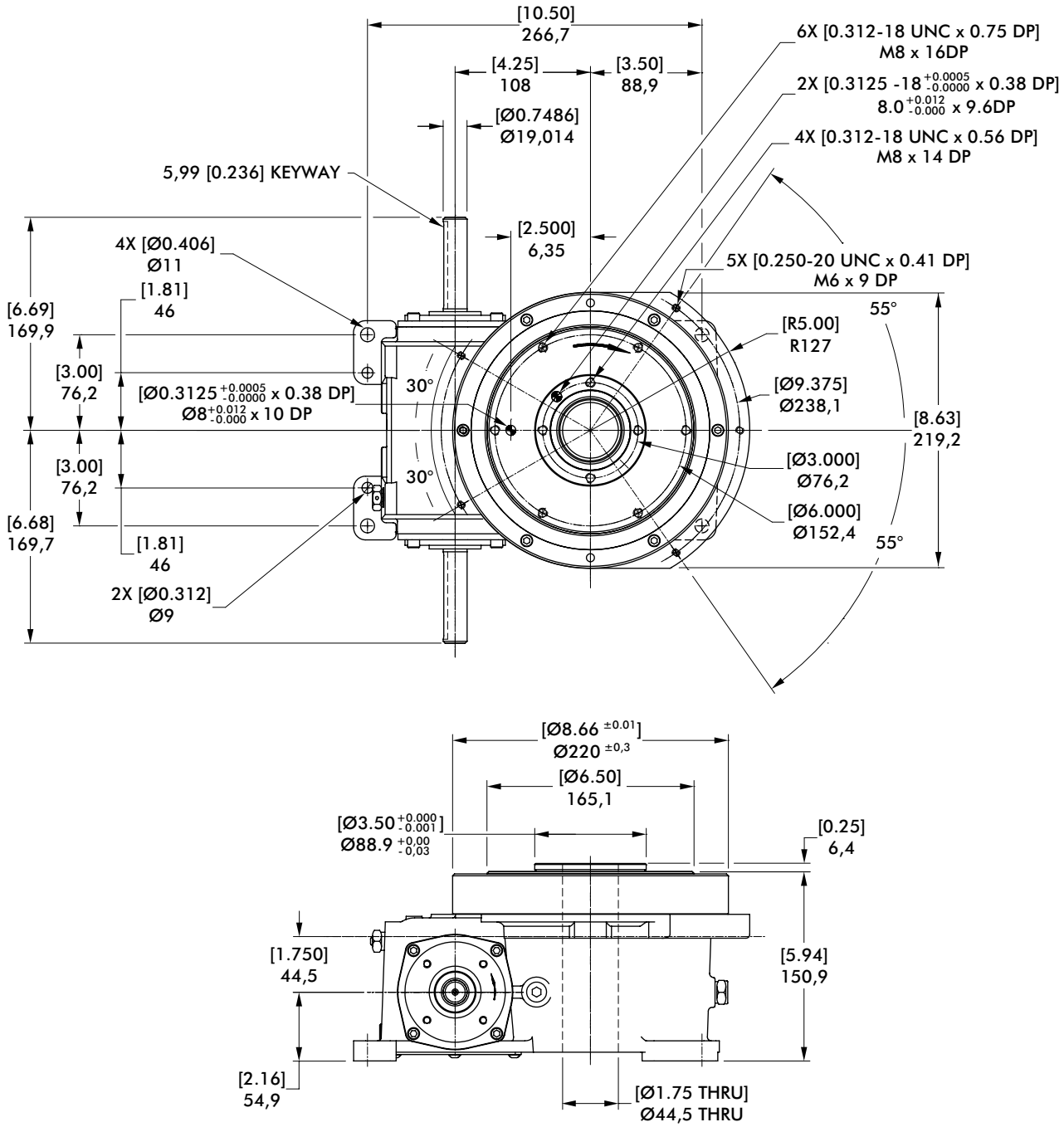

mm [INCH]

THIRD ANGLE PROJECTION

Dimensions and technical information are subject to change without notice

Proximity Switch

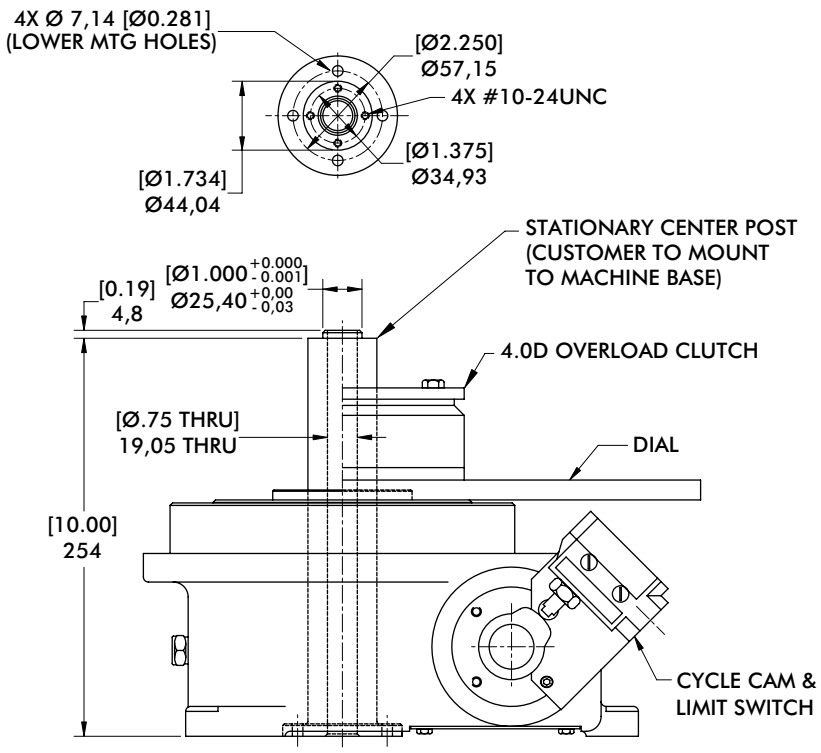

mm [INCH]

THIRD ANGLE PROJECTION

Center Post

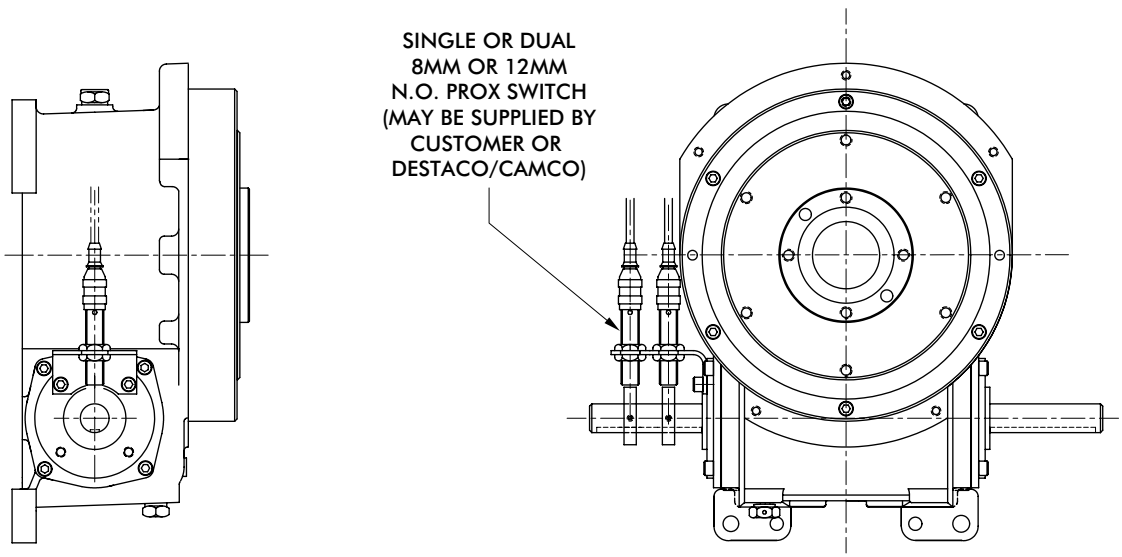

601RDM SERIES

Rotary Index Drive | Dimensions

4.0D Overload Clutch

THRU-HOLE CLUTCH

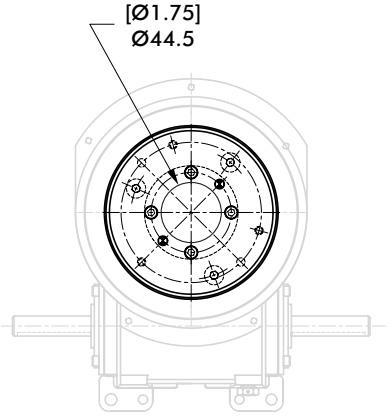

STANDARD CLUTCH

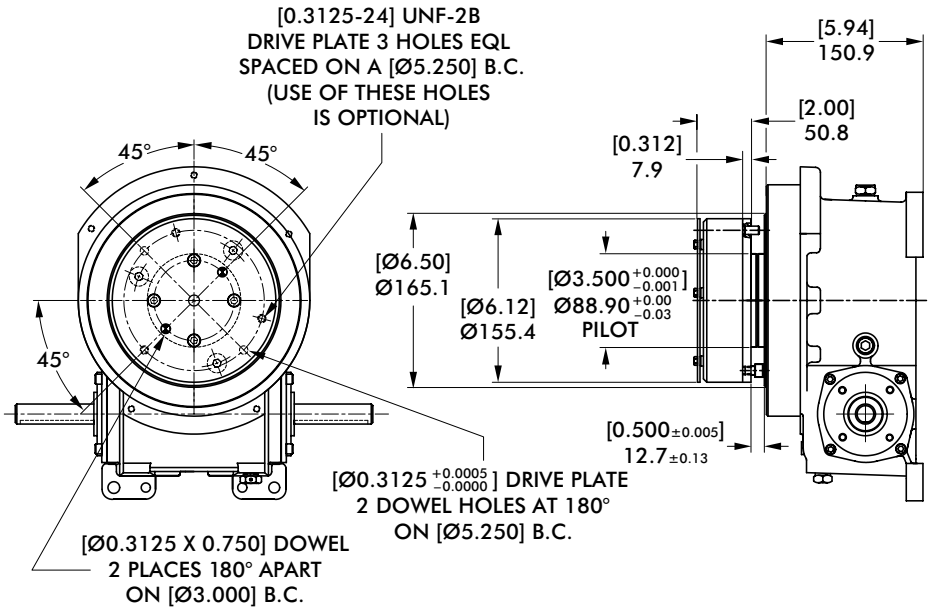

mm [INCH]

THIRD ANGLE PROJECTION

4.0D Overload Clutch with EZ Dial Mounting Adapter

THRU-HOLE EZ CLUTCH

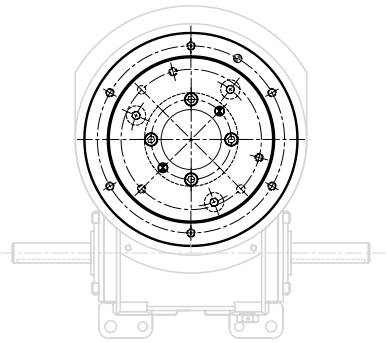

STANDARD EZ CLUTCH

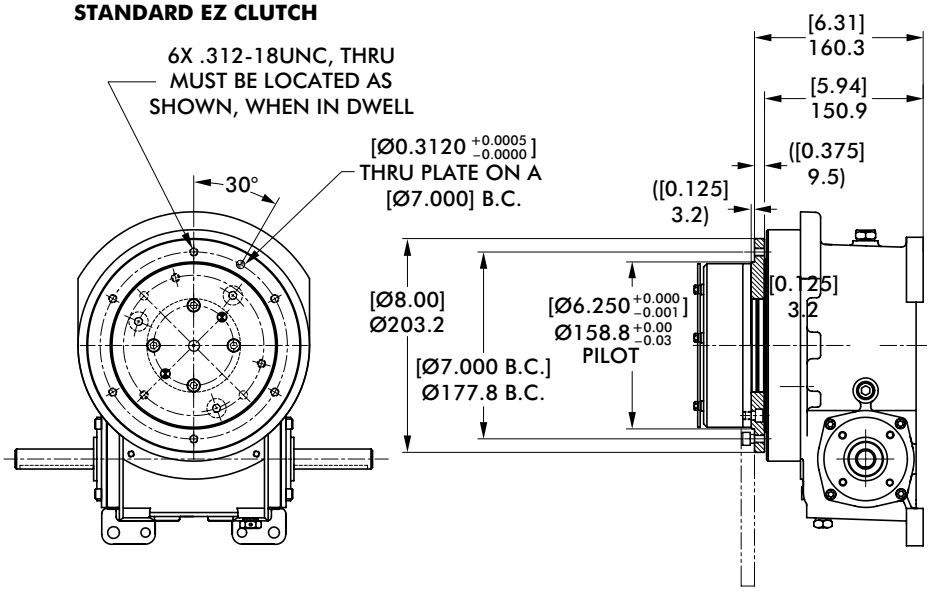

Model	Internal Inertia kg-m² [lb-in²]	Torque Setting N-m [in-lb]
4.0D	0,0202 [69]	47, 70, 85, 130, 198, 333, 452 [420, 620, 750, 1150, 1750, 2950, 4000]

Notes

902RDM SERIES

Rotary Index Drive | How To Order

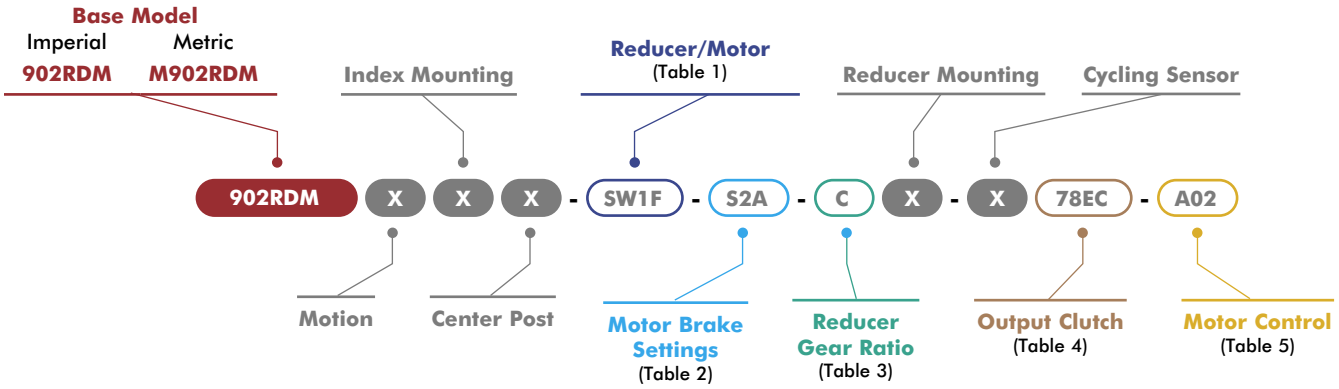

X = See Page 3 for option information.

1 Reducer/Motor Options

Code	Description
0000	No Reducer or Motor*
	R225 Motors
R2XX	R225 Adapter only*
R2SA	R225 Reducer 56 ADAPTER & CPLG, Single Extended Worm
R2SB	R225 Reducer 145TC ADAPTER & CPLG, Single Extended Worm (No Motor)
R2SC	R225 Reducer with 0.5HP 56C 230/460V AC Motor, Single Extended Worm
R2SD	R225 Reducer with 1.0HP 56C 230/460V AC Motor, Single Extended Worm
R2SE	R225 Reducer with 1.0HP 56C 90V DC Motor, Single Extended Worm
R2SF	R225 Reducer with 1.0HP 56C 180V DC Motor, Single Extended Worm
R2DA	R225 Reducer 56 ADAPTER & CPLG, Double Extended Worm
R2DB	R225 Reducer 145TC ADAPTER & CPLG, Double Extended Worm (No Motor)
R2DC	R225 Reducer with 0.5HP 56C 230/460V AC Motor, Double Extended Worm
R2DD	R225 Reducer with 1.0HP 56C 230/460V AC Motor, Double Extended Worm
R2DE	R225 Reducer with 1.0HP 56C 90V DC Motor, Double Extended Worm
R2DF	R225 Reducer with 1.0HP 56C 180V DC Motor, Double Extended Worm
	SEW KH37 Motors
SW1E	KH37 Adapter only*
SW1F	SEW KH37DRN80M4/.75Kw Motor/Brake Motor (60Hz, 230/460V)
SW1G	SEW KH37DRN80M4/.75Kw Motor/Brake Motor (50Hz, 400V)
SW1H	SEW KH37DRN80M4/.75Kw Motor/Brake Motor (60Hz, 575V)
SW1J	SEW KH37DRN90L4/1.5Kw Motor/Brake Motor (60Hz, 230/460V)
SW1K	SEW KH37DRN90L4/1.5Kw Motor/Brake Motor (50Hz, 400V)
SW1L	SEW KH37DRN90L4/1.5Kw Motor/Brake Motor (60Hz, 575V)
	STM RMI-63/70 Motors
RM4A	STM RMI-63 Adapter only*
RM4B	STM RMI-63 IEC80-B14 Reducer
RM4C	STM RMI-63 IEC90-B14 Reducer
RM4D	STM RMI-63 Reducer with .75kW Motor
RM4E	STM RMI-63 Reducer with 1.5kW Motor
RM5A	STM RMI-70 Adapter only*
RM5B	STM RMI-70 IEC80-B14 Reducer
RM5C	STM RMI-70 IEC90-B14 Reducer
RM5D	STM RMI-70 Reducer with .75kW Motor
RM5E	STM RMI-70 Reducer with 1.5kW Motor

*All Reducer/Motor adapters require Gear Ratio option to be 0.

2 Motor Brake*

Code	Description
000	No Brake
S1A	1.69 Nm (BE05)
S1B	2.49 Nm (BE05)
S1C	3.50 Nm (BE05)
S2A	4.97 Nm (BE1)
S2B	7.01 Nm (BE1)
S2C	9.94 Nm (BE1)
S3A	9.94 Nm (BE2)
S3B	14.01 Nm (BE2)
S3C	20.00 Nm (BE2)

*SEW Motor brake setting options only. All other motors use option code 000.

3 Reducer Gear Ratios*

Code	Description		
	R225	SEW KH37	STM RMI-63/70
0	N/A	N/A	N/A
A	10:1	10.49:1	10:1
B	15:1	15.31:1	15:1
C	20:1	20.19:1	20:1
D	25:1	29.96:1	28:1
E	30:1	37.97:1	40:1
F	40:1	49.79:1	49:1
G	50:1	58.60:1	56:1
H	60:1	67.80:1	70:1

*All Reducer/Motor adapters require Gear Ratio option to be 0.

Select Gear ratio column based on the reducer type selected.

4 Output Clutch & Settings

902RDM Imperial Clutch Models

Code	Description
0000	No Output Overload Clutch
78DA	7.8D/3200 In-Lb, Standard*
78DB	7.8D/7200 In-Lb, Standard*
78DC	7.8D/10000 In-Lb, Standard*
78DD	7.8D/1400 In-Lb, Standard*
78DE	7.8D/1700 In-Lb, Standard*
78DF	7.8D/2600 In-Lb, Standard*
78DG	7.8D/4200 In-Lb, Standard*
78DH	7.8D/5000 In-Lb, Standard*
78DJ	7.8D/3200 In-Lb, Thru-Hole
78DK	7.8D/7200 In-Lb, Thru-Hole
78DC	7.8D/10000 In-Lb, Thru-Hole
78DM	7.8D/1400 In-Lb, Thru-Hole
78DN	7.8D/1700 In-Lb, Thru-Hole
78DP	7.8D/2600 In-Lb, Thru-Hole
78DQ	7.8D/4200 In-Lb, Thru-Hole
78DR	7.8D/5000 In-Lb, Thru-Hole
78EA	7.8D/3200 In-Lb, Standard, EZ*
78EB	7.8D/7200 In-Lb, Standard, EZ*
78EC	7.8D/10000 In-Lb, Standard, EZ*
78ED	7.8D/1400 In-Lb, Standard, EZ*
78EE	7.8D/1700 In-Lb, Standard, EZ*
78EF	7.8D/2600 In-Lb, Standard, EZ*
78EG	7.8D/4200 In-Lb, Standard, EZ*
78EH	7.8D/5000 In-Lb, Standard, EZ*
78EJ	7.8D/3200 In-Lb, Thru-Hole, EZ
78EK	7.8D/7200 In-Lb, Thru-Hole, EZ
78EC	7.8D/10000 In-Lb, Thru-Hole, EZ
78EM	7.8D/1400 In-Lb, Thru-Hole, EZ
78EN	7.8D/1700 In-Lb, Thru-Hole, EZ
78EP	7.8D/2600 In-Lb, Thru-Hole, EZ
78EQ	7.8D/4200 In-Lb, Thru-Hole, EZ
78ER	7.8D/5000 In-Lb, Thru-Hole, EZ

M902RDM Metric Clutch Models

Code	Description
0000	No Output Overload Clutch
M78DA	M7.8D/360 Nm, Standard*
M78DB	M7.8D/815 Nm, Standard*
M78DC	M7.8D/1130 Nm, Standard*
M78DD	M7.8D/160 Nm, Standard*
M78DE	M7.8D/192 Nm, Standard*
M78DF	M7.8D/295 Nm, Standard*
M78DG	M7.8D/475 Nm, Standard*
M78DH	M7.8D/566 Nm, Standard*
M78DJ	M7.8D/360 Nm, Thru-Hole
M78DK	M7.8D/815 Nm, Thru-Hole
M78DC	M7.8D/1130 Nm, Thru-Hole
M78DM	M7.8D/160 Nm, Thru-Hole
M78DN	M7.8D/192 Nm, Thru-Hole
M78DP	M7.8D/295 Nm, Thru-Hole
M78DQ	M7.8D/475 Nm, Thru-Hole
M78DR	M7.8D/566 Nm, Thru-Hole
M78EA	M7.8D/360 Nm, Standard, EZ*
M78EB	M7.8D/815 Nm, Standard, EZ*
M78EC	M7.8D/1130 Nm, Standard, EZ*
M78ED	M7.8D/160 Nm, Standard, EZ*
M78EE	M7.8D/192 Nm, Standard, EZ*
M78EF	M7.8D/295 Nm, Standard, EZ*
M78EG	M7.8D/475 Nm, Standard, EZ*
M78EH	M7.8D/566 Nm, Standard, EZ*
M78EJ	M7.8D/360 Nm, Thru-Hole, EZ
M78EK	M7.8D/815 Nm, Thru-Hole, EZ
M78EC	M7.8D/1130 Nm, Thru-Hole, EZ
M78EM	M7.8D/160 Nm, Thru-Hole, EZ
M78EN	M7.8D/192 Nm, Thru-Hole, EZ
M78EP	M7.8D/295 Nm, Thru-Hole, EZ
M78EQ	M7.8D/475 Nm, Thru-Hole, EZ
M78ER	M7.8D/566 Nm, Thru-Hole, EZ

*Cannot be used with center post options P and B.

5 Motor Control

Code	Description	
000	NO MOTOR CONTROL	
A01	(AC) PowerFlex 523 1HP	120V 1Ph
A02		240V 1Ph
A03		480V 3Ph
A04	(AC) PowerFlex 525 1HP	120V 1Ph
A05		240V 1Ph
A06		480V 3Ph
A07	(AC) PowerFlex 523 2HP	240V 3Ph
A08		480V 3Ph
A09	(AC) PowerFlex 525 2HP	240V 3Ph
A10		480V 3Ph
D01	(DC) Varipak 1HP 90VDC	Uni-Directional
D02		Bi-Directional
D03	(DC) Varipak 2HP 180VDC	Uni-Directional
D04		Bi-Directional

Dimensions and technical information are subject to change without notice

Maximum Inertia x 1000 kg-cm² [lb-in²] for standard package							
Stops	Motion Time [seconds]						
	0.458	0.611	0.764	0.917	1.222	1.528	1.833
2	3 [1]	9 [3]	20 [7]	35 [12]	76 [26]	117 [40]	161 [55]
3	12 [4]	32 [11]	67 [23]	120 [41]	246 [84]	369 [126]	509 [174]
4	23 [8]	59 [20]	120 [41]	214 [73]	439 [150]	661 [226]	907 [310]
6	53 [18]	129 [44]	263 [90]	462 [158]	945 [323]	1419 [485]	1952 [667]
8	94 [32]	234 [80]	468 [160]	825 [282]	1683 [575]	2528 [864]	3474 [1187]
12	214 [73]	530 [181]	989 [338]	1425 [487]	2531 [865]	3956 [1352]	5701 [1948]
16	380 [130]	916 [313]	1481 [506]	2130 [728]	3790 [1295]	5923 [2024]	8528 [2914]
Reducer Ratio							
	15	20	25	30	40	50	60

Other Motions (stops and index periods) available. Contact your DESTACO sales representative for more information.

Features

- R225 Reducer (Ratios from 15:1 to 60:1)
- Single Extended wormshaft (Standard)
- Double Extended Camshaft (Input Shaft)
- Center Thru Hole (Ø57,15 mm [Ø2.25 in.])
- 1 HP AC Drive Package with Inverter Duty Motor and IM-pAC AC Drive (up to 60 cpm)
- Cycle Cam and Limit Switch Mounted to Camshaft
- Right Hand Cam

Optional Accessories

- 1 hp DC Motor
- Varipak DC Motor Control (up to 30 cpm)
- Output Mechanical Overload Clutch – See Page 21
- EZ Mount Dial Adapter
- Stationary Center Post
- Dual Cam and Limit Switch
- Base Riser Blocks
- Electric Clutch-Brake
- Left Hand Cam
- Relief in Dwell for shot-pin applications

Output Load Capacity (loads carried during index):

Radial	15747 N [3540 lbs]
Thrust/Axial	31138 N [7000 lbs]
Moment	2443 N-m [21620 in-lb]

Typical Application Dial Diameter: 508 mm [20 in] to 1219 mm [48 in]

Accuracy ±27 arcsec / ±0,08 mm [±.003in] at 609,6 mm [24in] Radius

Repeatability ±7 arcsec / ±0,020 mm [±.0008in] at 609,6 mm [24in] Radius



902RDM SERIES

Rotary Index Drive | Dimensions

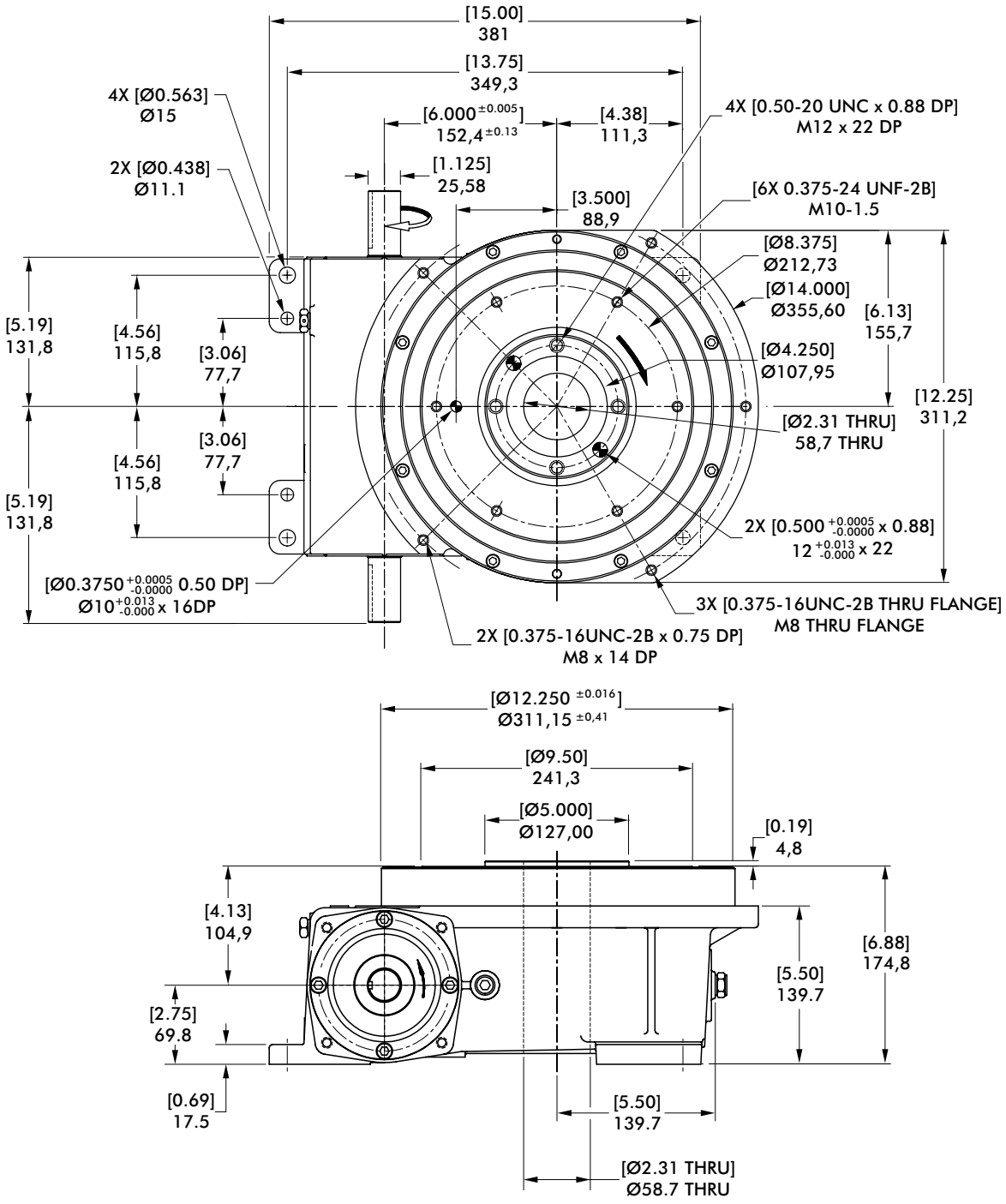

mm [INCH]

THIRD ANGLE PROJECTION

Dimensions and technical information are subject to change without notice

Center Post

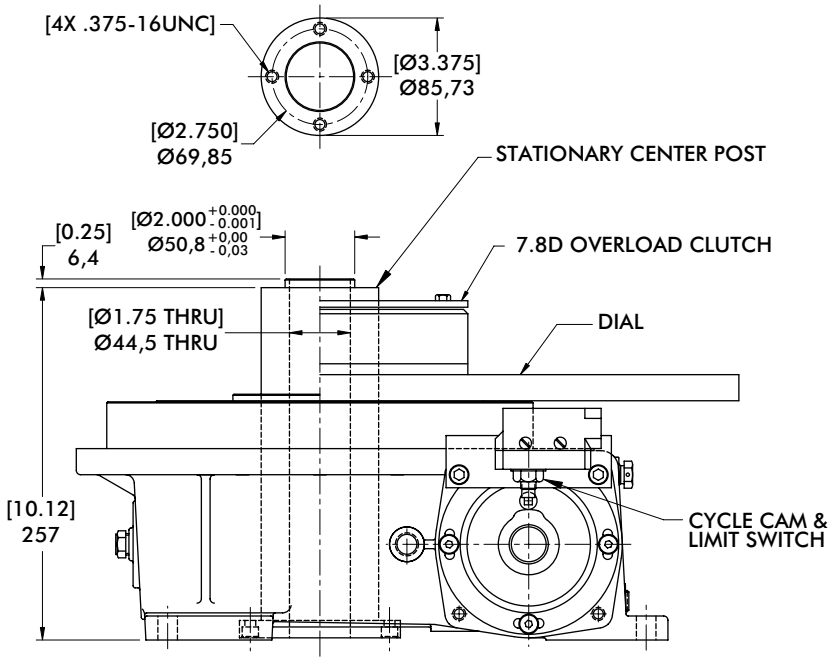

mm [INCH]

THIRD ANGLE PROJECTION

Proximity Switch

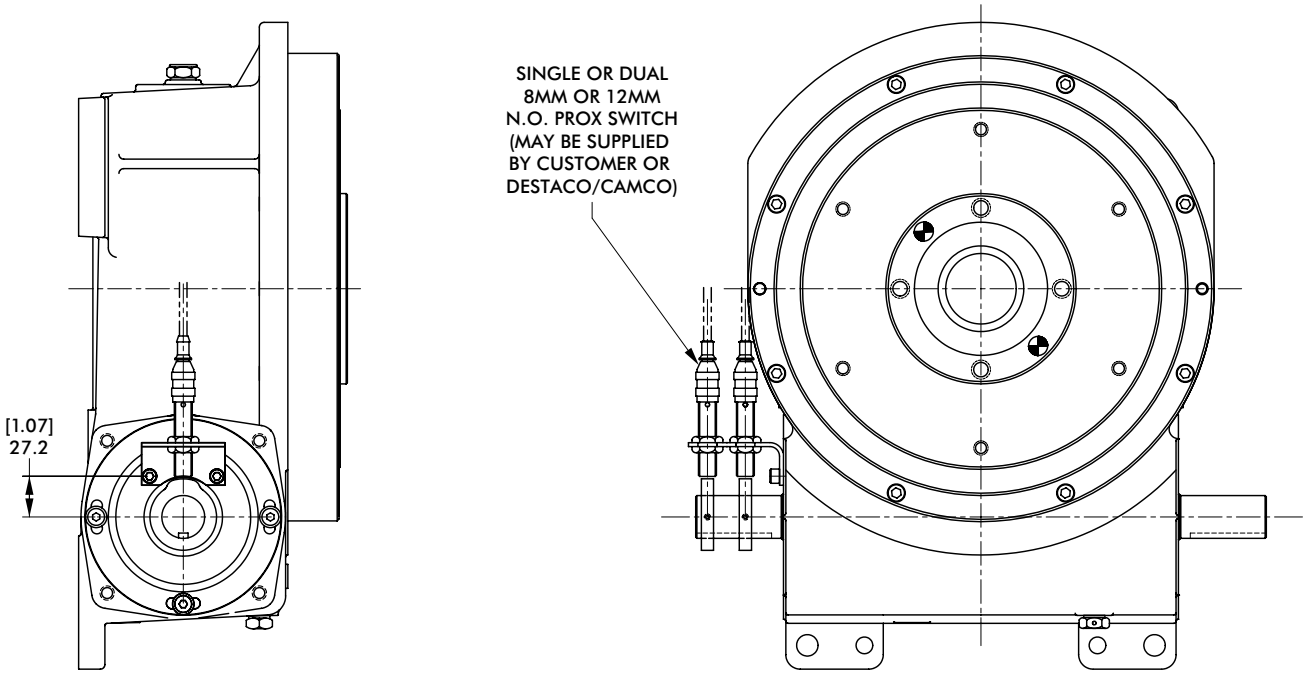

902RDM SERIES

Rotary Index Drive | Dimensions

7.8D Overload Clutch

THRU-HOLE CLUTCH

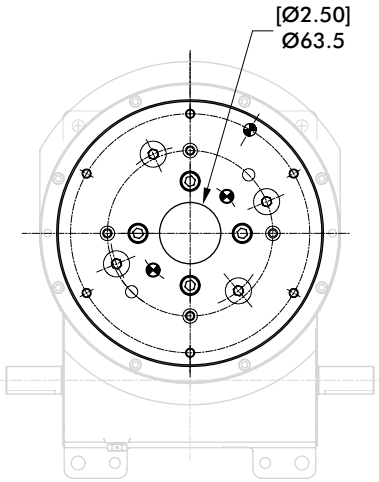

STANDARD CLUTCH

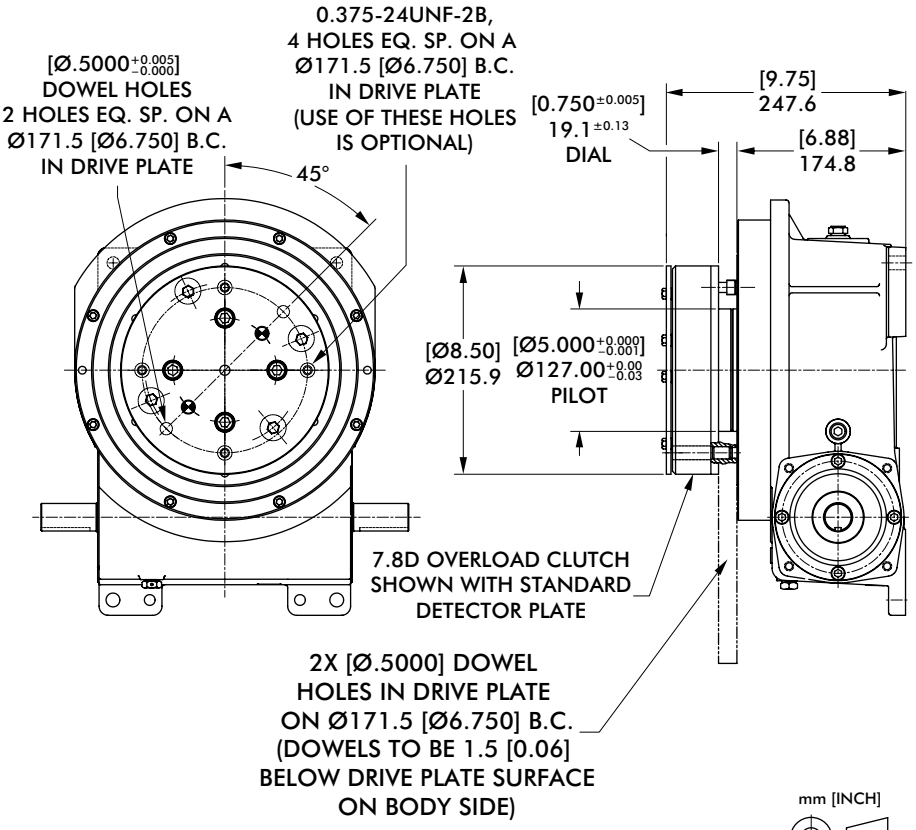

mm [INCH]

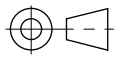

THIRD ANGLE
PROJECTION

7.8D Overload Clutch with EZ Dial Mounting Adapter

THRU-HOLE EZ CLUTCH

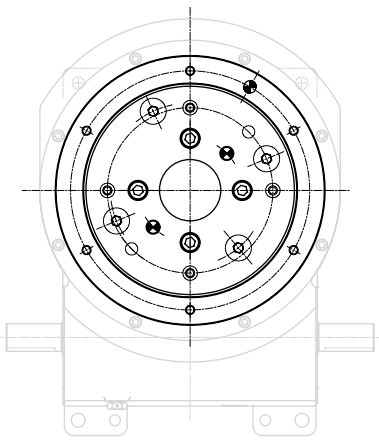

STANDARD EZ CLUTCH

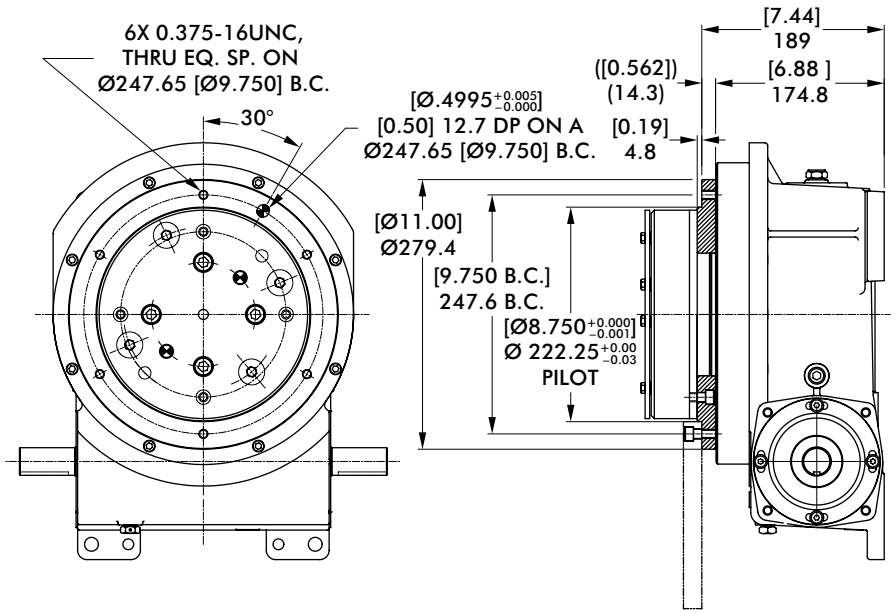

Model	Internal Inertia kg-m² [lb-in²]	Torque Setting N-m [in-lb]
7.8D	0,0778 [266]	158, 192, 294, 362, 475, 565, 813, 1130 [1400, 1700, 2600, 3200, 4200, 5000, 7200, 10000]

Notes

1100RDM SERIES

Rotary Index Drive | How To Order

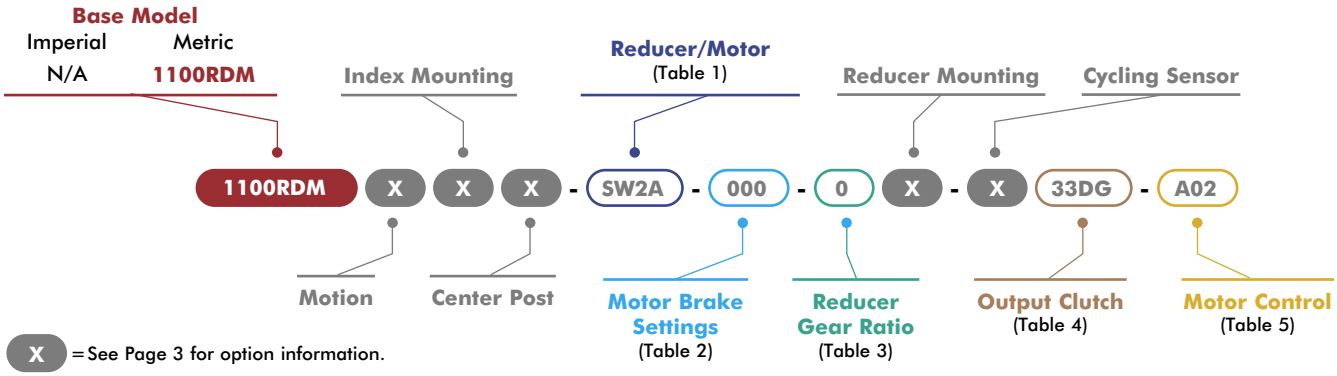

X = See Page 3 for option information.

1 Reducer/Motor Options

Code	Description
0000	No Reducer or Motor*
	7300C Motors
CD1A	Indexer with 7300C Adapter*
CS1B	CONE DRIVE 7300C W/56C Reducer, SE Worm
CS1C	CONE DRIVE 7300C W/145TC Reducer, SE Worm
CS1D	CONE DRIVE 7300C Reducer w/ 1.0HP AC 56C Motor, SE Worm
CS1E	CONE DRIVE 7300C Reducer w/ 2.0HP AC 145TC Motor, SE Worm
CS1F	CONE DRIVE 7300C Reducer w/ 1.0HP 90V DC 56C Motor, SE Worm
CS1G	CONE DRIVE 7300C Reducer w/1.0HP 180V DC 56C Motor, SE Worm
CS1H	CONE DRIVE 7300C Reducer w/2.0HP 180V DC 143TC Motor, SE Worm
CD1B	CONE DRIVE 7300C w/ 56C Reducer, DE Worm
CD1C	CONE DRIVE 7300C W/145TC Reducer, DE Worm
CD1D	CONE DRIVE 7300C Reducer w/ 1.0HP AC 56C Motor, DE Worm
CD1E	CONE DRIVE 7300CReducer w/ 2.0HP AC 145TC Motor, DE Worm
CD1F	CONE DRIVE 7300C Reducer w/ 1.0HP 90V DC 56C Motor, DE Worm
CD1G	CONE DRIVE 7300C Reducer w/ 1.0HP 180V DC 56C Motor, DE Worm
CD1H	CONE DRIVE 7300C Reducer w/ 2.0HP 180V DC 143TC Motor, DE Worm
	SEW KH47 Motors
SW2A	Indexer with KH47 Adapter*
SW2B	SEW KH47DRN80M4/.75Kw Motor/Brake Motor (60Hz, 230/460V)
SW2C	SEW KH47DRN80M4/.75Kw Motor/Brake Motor (50Hz, 200/400V)
SW2D	SEW KH47DRN80M4/.75Kw Motor/Brake Motor (60Hz, 575V)
SW2E	SEW KH47DRN90L4/1.5Kw Motor/Brake Motor (60Hz, 230/460V)
SW2F	SEW KH47DRN90L4/1.5Kw Motor/Brake Motor (50Hz, 200/400V)
	SEW KH57 Motors
SW3A	Indexer with KH57 Adapter*
SW3B	SEW KH57DRN80M4/.75Kw Motor/Brake Motor (60Hz, 230/460V)
SW3C	SEW KH57DRN80M4/.75Kw Motor/Brake Motor (50Hz, 200/400V)
SW3D	SEW KH57DRN80M4/.75Kw Motor/Brake Motor (60Hz, 575V)
SW3E	SEW KH57DRN90L4/1.5Kw Motor/Brake Motor (60Hz, 230/460V)
SW3F	SEW KH57DRN90L4/1.5Kw Motor/Brake Motor (50Hz, 200/400V)
SW3G	SEW KH57DRN90L4/1.5Kw Motor/Brake Motor (60Hz, 575V)
	STM RMI-85 Motors
RM6A	Indexer with RMI-85 Adapter*
RM6B	STM RMI-85/LFB/IEC90-B14 Reducer only
RM6C	STM RMI-85/LFB/IEC100-B14 Reducer only
RM6D	STM RMI-85/LFB/1.1kW Reducer and Motor
RM6E	STM RMI-85/LFB/2.2kW Reducer and Motor

*All Reducer/Motor adapters require Gear Ratio option to be 0.

2 Motor Brake*

Code	Description
000	No Brake
S1A	1.69 Nm (BE05)
S1B	2.49 Nm (BE05)
S1C	3.50 Nm (BE05)
S2A	4.97 Nm (BE1)
S2B	7.01 Nm (BE1)
S2C	9.94 Nm (BE1)
S3A	9.94 Nm (BE2)
S3B	14.01 Nm (BE2)
S3C	20.00 Nm (BE2)
S4A	20.00 Nm (BE5)
S4B	28.02 Nm (BE5)
S4C	40.00 Nm (BE5)
S4D	55.03 Nm (BE5)

*SEW Motor brake setting options only. All other motors use option code 000.

3 Reducer Gear Ratios*

Code	Description			
	7300C	SEW KH47	SEW KH57	STM RMI-85
0	N/A	N/A	N/A	N/A
A	10:1	10.56:1	9.59:1	10:1
B	15:1	15.86:1	15.22:1	15:1
C	20:1	19.58:1	19.34:1	20:1
D	25:1	29.32:1	30.28:1	28:1
E	30:1	39.61:1	38.49:1	40:1
F	40:1	48.95:1	48.89:1	49:1
G	50:1	63.30:1	60.81:1	56:1
H	60:1	69.84:1	69.12:1	70:1

*All Reducer/Motor adapters require Gear Ratio option to be 0.

Select Gear ratio column based on the reducer type selected.

4 Output Clutch & Settings

1100RDM Metric Clutch Models

Code	Description
0000	No Output Overload Clutch
33DA	33D/960 Nm, Standard Clutch*
33DB	33D/1470 Nm, Standard Clutch*
33DC	33D/1865 Nm, Standard Clutch*
33DD	33D/2260 Nm, Standard Clutch*
33DE	33D/2655 Nm, Standard Clutch*
33DF	33D/2880 Nm, Standard Clutch*
33DG	33D/3500 Nm, Standard Clutch*
33DH	33D/960 Nm, Thru-Hole Clutch
33DJ	33D/1470 Nm, Thru-Hole Clutch
33DK	33D/1865 Nm, Thru-Hole Clutch
33DL	33D/2260 Nm, Thru-Hole Clutch
33DM	33D/2655 Nm, Thru-Hole Clutch
33DN	33D/2880 Nm, Thru-Hole Clutch
33DP	33D/3500 Nm, Thru-Hole Clutch
33EA	33D/960 Nm, Standard Clutch, EZ*
33EB	33D/1470 Nm, Standard Clutch, EZ*
33EC	33D/1865 Nm, Standard Clutch, EZ*
33ED	33D/2260 Nm, Standard Clutch, EZ*
33EE	33D/2655 Nm, Standard Clutch, EZ*
33EF	33D/2880 Nm, Standard Clutch, EZ*
33EG	33D/3500 Nm, Standard Clutch, EZ*
33EH	33D/960 Nm, Thru-Hole Clutch, EZ
33EJ	33D/1470 Nm, Thru-Hole Clutch, EZ
33EK	33D/1865 Nm, Thru-Hole Clutch, EZ
33EL	33D/2260 Nm, Thru-Hole Clutch, EZ
33EM	33D/2655 Nm, Thru-Hole Clutch, EZ
33EN	33D/2880 Nm, Thru-Hole Clutch, EZ
33EP	33D/3500 Nm, Thru-Hole Clutch, EZ

*Cannot be used with center post options P and B.

5 Motor Control

Code	Description	
000	NO MOTOR CONTROL	
A01	(AC) PowerFlex 523 1HP	120V 1Ph
A02		240V 1Ph
A03		480V 3Ph
A04	(AC) PowerFlex 525 1HP	120V 1Ph
A05		240V 1Ph
A06		480V 3Ph
A07	(AC) PowerFlex 523 2HP	240V 3Ph
A08		480V 3Ph
A09	(AC) PowerFlex 525 2HP	240V 3Ph
A10		480V 3Ph
A11	(AC) PowerFlex 523 3HP	240V 3Ph
A12		480V 3Ph
A13	(AC) PowerFlex 525 3HP	240V 1Ph
A14		480V 3Ph
A15	(AC) PowerFlex 523 5HP	480V 3Ph
A16		600V 3Ph
A17	(AC) PowerFlex 525 5HP	480V 3Ph
A18		600V 3Ph
D01	(DC) Varipak 1HP 90VDC	Uni-Directional
D02		Bi-Directional
D03	(DC) Varipak 2HP 180VDC	Uni-Directional
D04		Bi-Directional
D05	(DC) Cycletrol 3HP 180VDC	

Dimensions and technical information are subject to change without notice

Maximum Inertia x 1000 kg-cm² [lb-in²] for standard package							
Stops	Motion Time [seconds]						
	0.458	0.611	0.764	0.917	1.222	1.528	1.833
2	3 [1]	15 [5]	32 [11]	64 [22]	176 [60]	342 [117]	518 [177]
3	18 [6]	38 [13]	79 [27]	152 [52]	401 [137]	775 [265]	1171 [400]
4	38 [13]	79 [27]	161 [55]	304 [104]	790 [270]	1525 [521]	2297 [785]
6	88 [30]	179 [61]	351 [120]	664 [227]	1703 [582]	3283 [1122]	4940 [1688]
8	161 [55]	325 [111]	632 [216]	1185 [405]	3035 [1037]	5838 [1995]	7916 [2705]
12	369 [126]	735 [251]	1428 [488]	2672 [913]	6833 [2335]	12563 [4293]	16932 [5786]
16	658 [225]	1314 [449]	2543 [869]	4138 [1414]	7781 [2659]	11884 [4061]	16019 [5474]
Reducer Ratio							
	15.86	19.58	24.06	29.32	39.61	48.95	56.83

Other Motions (stops and index periods) available. Contact your DESTACO sales representative for more information.

Features

- KH47 Reducer and AC Motor with Optional Brake
- Double Extended Camshaft (Input Shaft)
- Center Thru Hole (Ø130 mm [Ø5.1 in.])
- AC drive package with Inverter Duty Motor and Inverter Drive (up to 60 cpm)
- Cycle Cam and Limit Switch Mounted to Camshaft
- Right Hand Cam

Optional Accessories

- 7300C Reducer (Ratios from 15:1 to 60:1)
- 1.5 HP DC motor
- Varipak DC Motor Control (up to 30 cpm)
- Output Mechanical Overload Clutch – See Page 27
- EZ Mount Dial Adapter
- 7350C Heavy Duty Reducer (Ratios from 10:1 to 60:1)
- Stationary Center Post
- Dual Cam and Limit Switch
- Left Hand Cam
- Relief in Dwell for shot-pin applications

Output Load Capacity (loads carried during index):

Radial	13789 N [3100 lbs]
Thrust/Axial	35586 N [8000 lbs]
Moment	3240 N-m [28674 in-lb]

Typical Application Dial Diameter: 508 mm [20 in] to 1524 mm [60 in]

Accuracy ±22 arcsec / ±0,08 mm [±.003in] at 76 mm [30in] Radius

Repeatability ±5 arcsec / ±0,020 mm [±.0008in] at 762 mm [30in] Radius

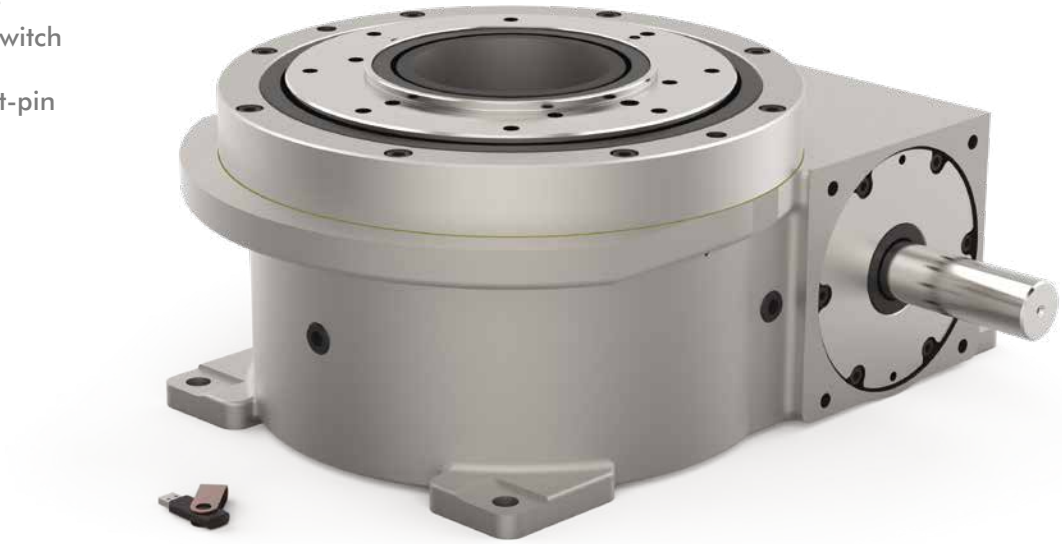

1100RDM SERIES

Rotary Index Drive | Dimensions

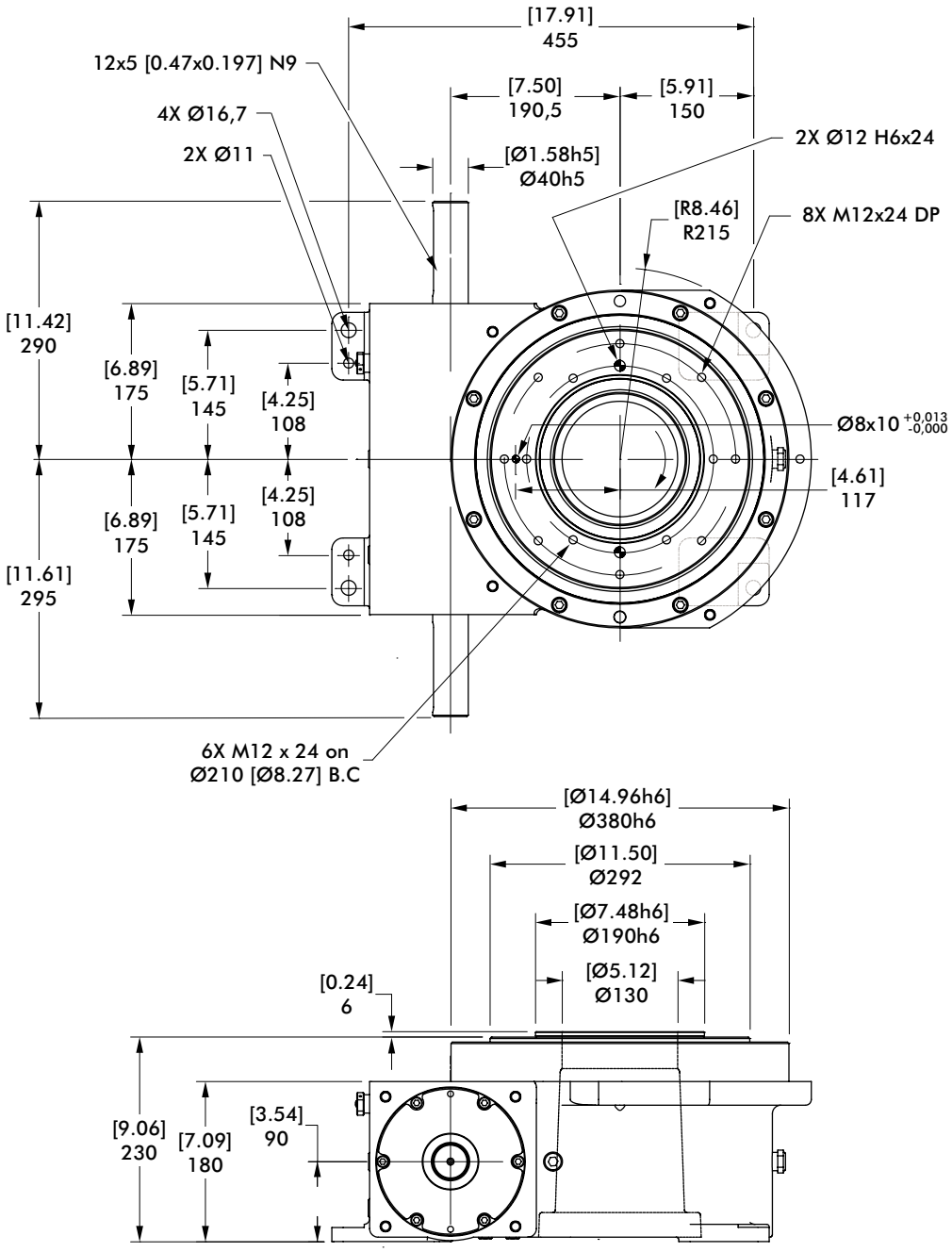

mm [INCH]

THIRD ANGLE PROJECTION

Dimensions and technical information are subject to change without notice

Center Post

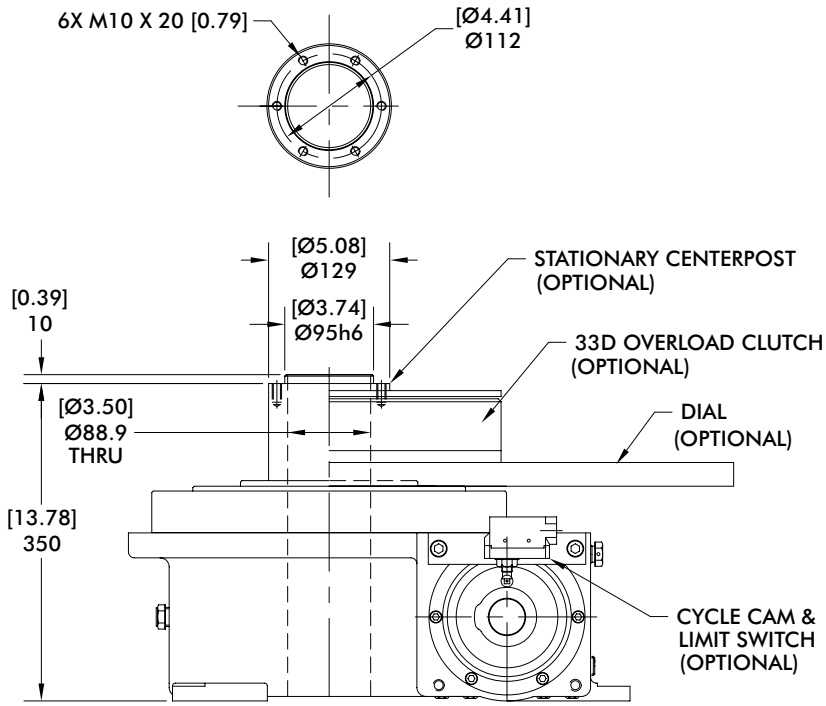

mm [INCH]

THIRD ANGLE PROJECTION

Proximity Switch

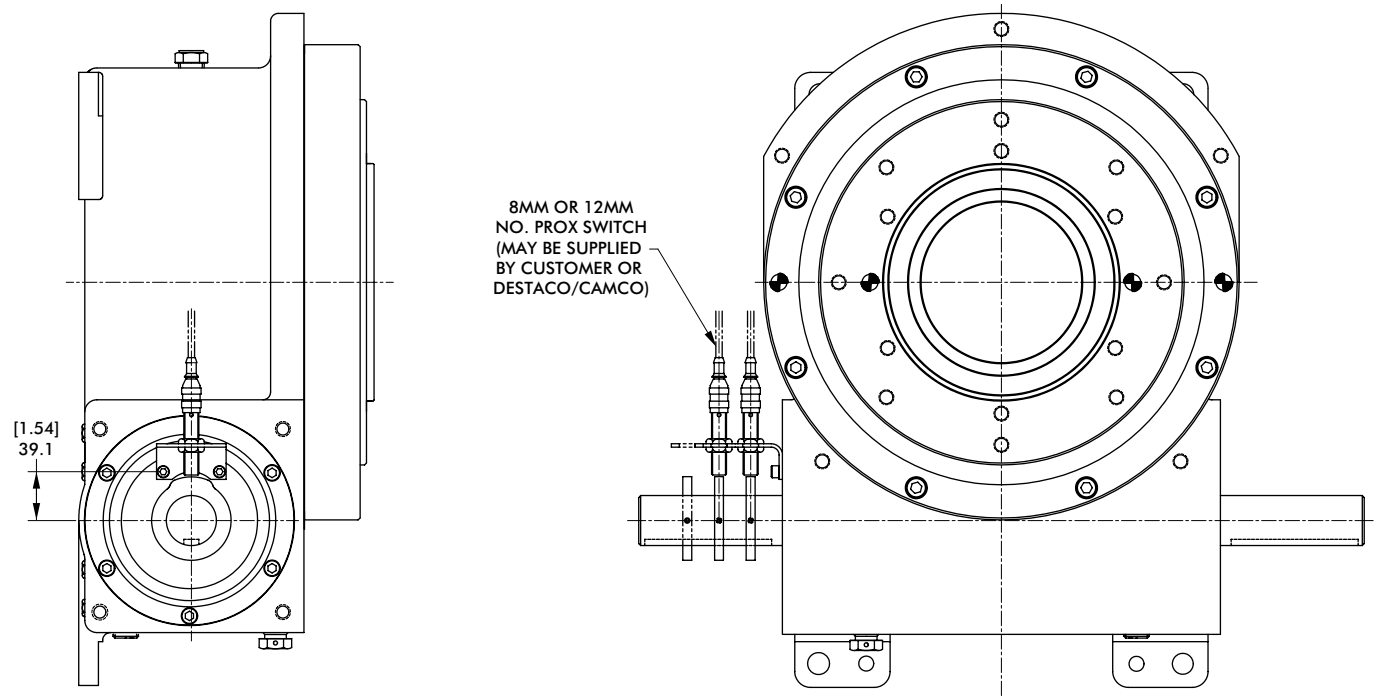

1100RDM SERIES

Rotary Index Drive | Dimensions

33D Overload Clutch

THRU-HOLE CLUTCH

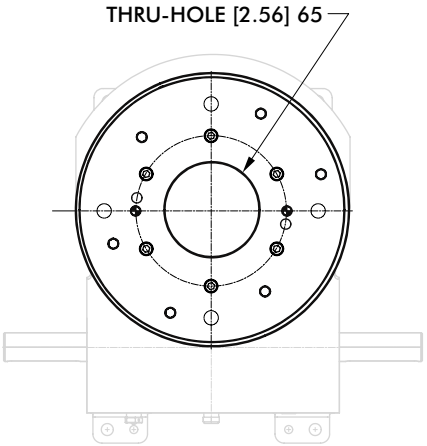

STANDARD CLUTCH

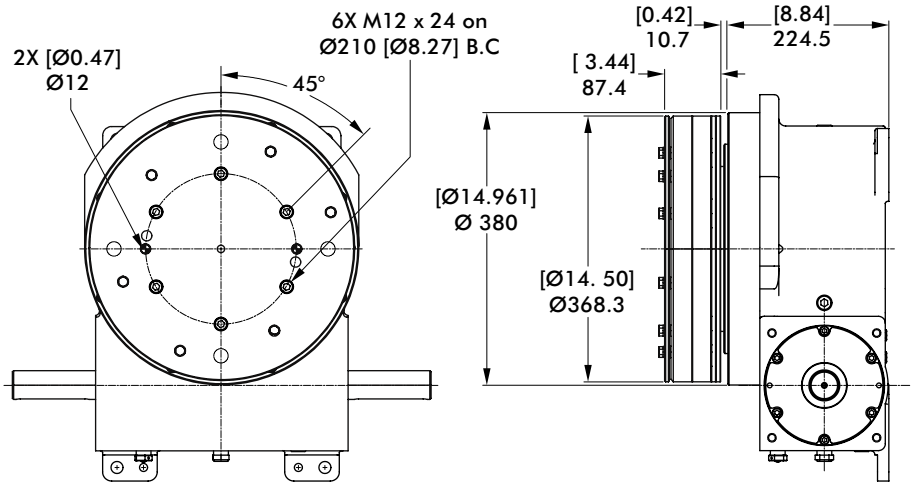

mm [INCH]

THIRD ANGLE PROJECTION

33D Overload Clutch with EZ Dial Mounting Adapter

THRU-HOLE EZ CLUTCH

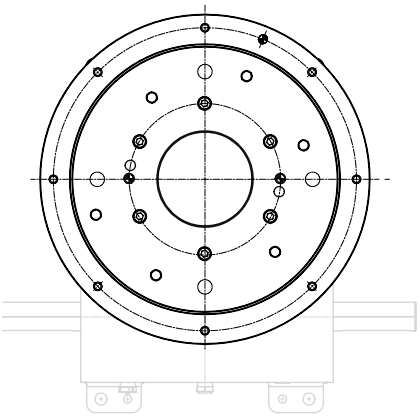

STANDARD EZ CLUTCH

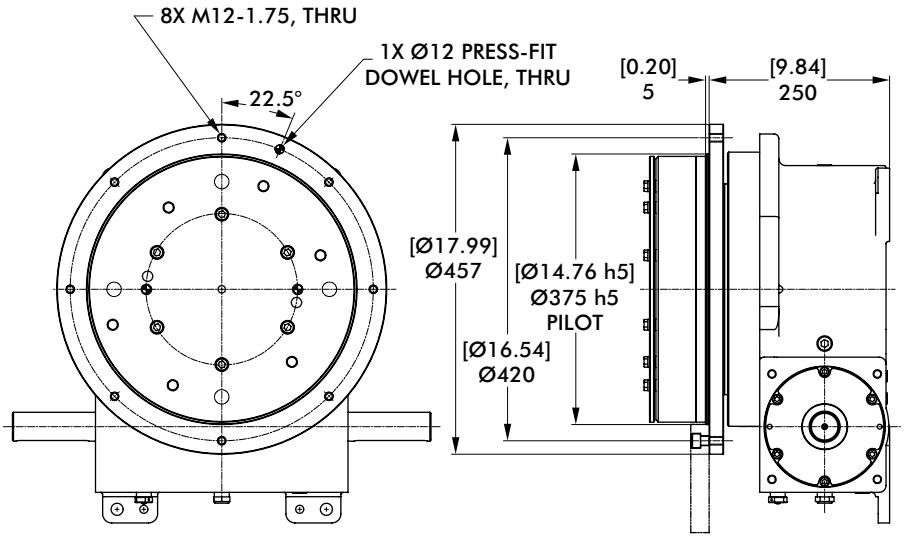

Model	Internal Inertia kg-m² [lb-in²]	Torque Setting N-m [in-lb]
33D	0,852 [2910]	960, 1469, 2260, 2881 [8500, 13000, 20000, 25500]

Dimensions and technical information are subject to change without notice

Notes

1305RDM SERIES

Rotary Index Drive | How To Order

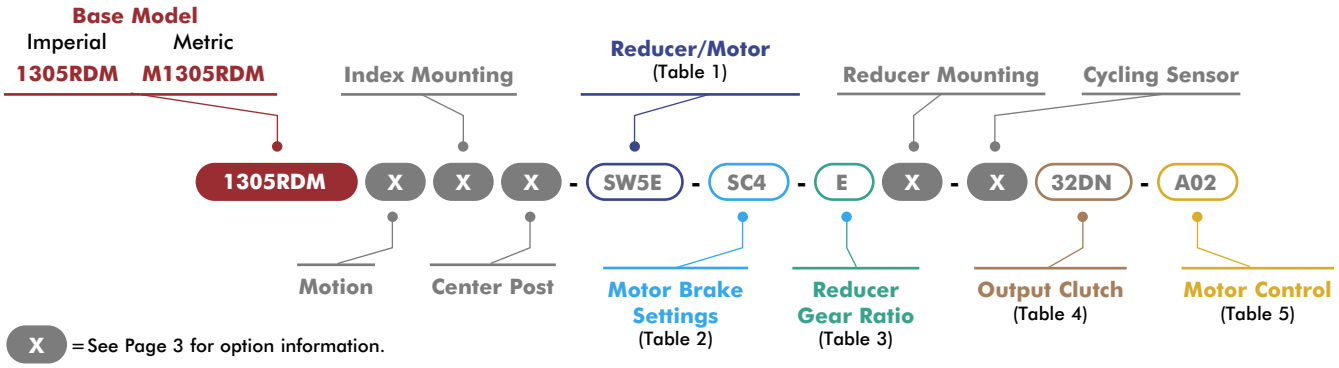

X = See Page 3 for option information.

1 Reducer/Motor Options*

Code	Description
0000	No Reducer or Motor*
	7350C Motors
CD2A	Indexer with 7350C Adapter*
CS2B	CONE DRIVE 7350C W/56C Reducer, SE Worm
CS2C	CONE DRIVE 7350C W/145TC Reducer, SE Worm
CS2D	CONE DRIVE 7350C Reducer w/ 1.0HP AC 56C Motor, SE Worm
CS2E	CONE DRIVE 7350C Reducer w/ 2.0HP AC 145TC Motor, SE Worm
CS2F	CONE DRIVE 7350C Reducer w/ 1.0HP 90V DC 56C Motor, SE Worm
CS2G	CONE DRIVE 7350C Reducer w/1.0HP 180V DC 56C Motor, SE Worm
CS2H	CONE DRIVE 7350C Reducer w/2.0HP 180V DC 143TC Motor, SE Worm
CD2B	CONE DRIVE 7350C w/ 56C Reducer, DE Worm
CD2C	CONE DRIVE 7350C W/145TC Reducer, DE Worm
CD2D	CONE DRIVE 7350C Reducer w/ 1.0HP AC 56C Motor, DE Worm
CD2E	CONE DRIVE 7350CReducer w/ 2.0HP AC 145TC Motor, DE Worm
CD2F	CONE DRIVE 7350C Reducer w/ 1.0HP 90V DC 56C Motor, DE Worm
CD2G	CONE DRIVE 7350C Reducer w/ 1.0HP 180V DC 56C Motor, DE Worm
CD2H	CONE DRIVE 7350C Reducer w/ 2.0HP 180V DC 143TC Motor, DE Worm
	SEW KH67 Motors
SW4A	Indexer with KH67 Adapter*
SW4B	SEW KH67DRN80M4 Reducer with 0.75Kw Motor (60Hz, 230/460V)
SW4C	SEW KH67DRN80M4 Reducer with 0.75Kw Motor (50Hz, 400V)
SW4D	SEW KH67DRN80M4 Reducer with 0.75Kw Motor (60Hz, 575V)
SW4E	SEW KH67DRN90L4 Reducer with 1.5Kw Motor (60Hz, 230/460V)
SW4F	SEW KH67DRN90L4 Reducer with 1.5Kw Motor (50Hz, 400V)
SW4G	SEW KH67DRN90L4 Reducer with 1.5Kw Motor (60Hz, 575V)
	SEW KH77 Motors
SW5A	Indexer with KH77 Adapter*
SW5B	SEW KH77DRN80M4 Reducer with 0.75Kw Motor (60Hz, 230/460V)
SW5C	SEW KH77DRN80M4 Reducer with 0.75Kw Motor (50Hz, 400V)
SW5D	SEW KH77DRN80M4 Reducer with 0.75Kw Motor (60Hz, 575V)
SW5E	SEW KH77DRN90L4 Reducer with 1.5Kw Motor (60Hz, 230/460V)
SW5F	SEW KH77DRN90L4 Reducer with 1.5Kw Motor (50Hz, 400V)
SW5G	SEW KH77DRN90L4 Reducer with 1.5Kw Motor (60Hz, 575V)
	STM RMI-110 Motors
RM7A	Indexer with RMI-110 Adapter*
RM7B	STM RMI-110/LFB/IEC90-B14 Reducer only
RM7C	STM RMI-110/LFB/IEC100-B14 Reducer only
RM7D	STM RMI-110/LFB/1.1kW Reducer and Motor
RM7E	STM RMI-110/LFB/2.2kW Reducer and Motor

*All Reducer/Motor adapters require Gear Ratio option to be 0.

2 Motor Brake*

Code	Description
000	(NO BRAKE/NO SEW)
S1A	1.69 Nm (BE05)
S1B	2.49 Nm (BE05)
S1C	3.50 Nm (BE05)
S2A	4.97 Nm (BE1)
S2B	7.01 Nm (BE1)
S2C	9.94 Nm (BE1)
S3A	9.94 Nm (BE2)
S3B	14.01 Nm (BE2)
S3C	20.00 Nm (BE2)
S4A	20.00 Nm (BE5)
S4B	28.02 Nm (BE5)
S4C	40.00 Nm (BE5)
S4D	55.03 Nm (BE5)

*SEW Motor brake setting options only. All other motors use option code 000.

3 Reducer Gear Ratios*

Code	Description			
	7350C	SEW KH67	SEW KH77	STM RMI-110
0	N/A	N/A	N/A	N/A
A	10:1	9.66:1	9.56:1	10:1
B	15:1	15.19:1	15.84:1	15:1
C	20:1	19.30:1	20.25:1	20:1
D	28:1	30.22:1	29.27:1	25:1
E	40:1	38.39:1	40.04:1	30:1
F	49:1	48.77:1	51.18:1	40:1
G	56:1	60.66:1	58.34:1	50:1
H	70:1	68.95:1	73.99:1	60:1

*All Reducer/Motor adapters require Gear Ratio option to be 0.

Select Gear ratio column based on the reducer type selected.

4 Output Clutch & Settings

1305RDM Imperial Clutch Models

Code	Description
0000	No Output Overload Clutch
32DA	32D/8500 In-Lb, Standard*
32DB	32D/13000 In-Lb, Standard*
32DC	32D/20000 In-Lb, Standard*
32DD	32D/31000 In-Lb, Standard*
32DE	32D/16500 In-Lb, Standard*
32DF	32D/25500 In-Lb, Standard*
32DG	32D/23500 In-Lb, Standard*
32DH	32D/8500 In-Lb, Thru-Hole
32DJ	32D/13000 In-Lb, Thru-Hole
32DK	32D/20000 In-Lb, Thru-Hole
32DL	32D/31000 In-Lb, Thru-Hole
32DM	32D/16500 In-Lb, Thru-Hole
32DN	32D/25500 In-Lb, Thru-Hole
32DP	32D/23500 In-Lb, Thru-Hole
32EA	32D/8500 In-Lb, Standard, EZ*
32EB	32D/13000 In-Lb, Standard, EZ*
32EC	32D/20000 In-Lb, Standard, EZ*
32ED	32D/31000 In-Lb, Standard, EZ*
32EE	32D/16500 In-Lb, Standard, EZ*
32EF	32D/25500 In-Lb, Standard, EZ*
32EG	32D/23500 In-Lb, Standard, EZ*
32EH	32D/8500 In-Lb, Thru-Hole, EZ
32EJ	32D/13000 In-Lb, Thru-Hole, EZ
32EK	32D/20000 In-Lb, Thru-Hole, EZ
32EL	32D/31000 In-Lb, Thru-Hole, EZ
32EM	32D/16500 In-Lb, Thru-Hole, EZ
32EN	32D/25500 In-Lb, Thru-Hole, EZ
32EP	32D/23500 In-Lb, Thru-Hole, EZ

M1305RDM Metric Clutch Models

Code	Description
0000	No Output Overload Clutch
M32DA	M32D/960 Nm, Standard*
M32DB	M32D/1470 Nm, Standard*
M32DC	M32D/2260 Nm, Standard*
M32DD	M32D/3500 Nm, Standard*
M32DE	M32D/1865 Nm, Standard*
M32DF	M32D/2880 Nm, Standard*
M32DG	M32D/2655 Nm, Standard*
M32DH	M32D/960 Nm, Thru-Hole
M32DJ	M32D/1470 Nm, Thru-Hole
M32DK	M32D/2260 Nm, Thru-Hole
M32DL	M32D/3500 Nm, Thru-Hole
M32DM	M32D/1865 Nm, Thru-Hole
M32DN	M32D/2880 Nm, Thru-Hole
M32DP	M32D/2655 Nm, Thru-Hole
M32EA	M32D/960 Nm, Standard, EZ*
M32EB	M32D/1470 Nm, Standard, EZ*
M32EC	M32D/2260 Nm, Standard, EZ*
M32ED	M32D/3500 Nm, Standard, EZ*
M32EE	M32D/1865 Nm, Standard, EZ*
M32EF	M32D/2880 Nm, Standard, EZ*
M32EG	M32D/2655 Nm, Standard, EZ*
M32EH	M32D/960 Nm, Thru-Hole, EZ
M32EJ	M32D/1470 Nm, Thru-Hole, EZ
M32EK	M32D/2260 Nm, Thru-Hole, EZ
M32EL	M32D/3500 Nm, Thru-Hole, EZ
M32EM	M32D/1865 Nm, Thru-Hole, EZ
M32EN	M32D/2880 Nm, Thru-Hole, EZ
M32EP	M32D/2655 Nm, Thru-Hole, EZ

*Cannot be used with center post options P and B.

5 Motor Control

Code	Description	
000	NO MOTOR CONTROL	
A01	(AC) PowerFlex 523 1HP	120V 1Ph
A02		240V 1Ph
A03		480V 3Ph
A04	(AC) PowerFlex 525 1HP	120V 1Ph
A05		240V 1Ph
A06		480V 3Ph
A07	(AC) PowerFlex 523 2HP	240V 3Ph
A08		480V 3Ph
A09	(AC) PowerFlex 525 2HP	240V 3Ph
A10		480V 3Ph
A11	(AC) PowerFlex 523 3HP	240V 3Ph
A12		480V 3Ph
A13	(AC) PowerFlex 525 3HP	240V 1Ph
A14		480V 3Ph
A15	(AC) PowerFlex 523 5HP	480V 3Ph
A16		600V 3Ph
A17	(AC) PowerFlex 525 5HP	480V 3Ph
A18		600V 3Ph
D01	(DC) Varipak 1HP 90VDC	Uni-Directional
D02		Bi-Directional
D03	(DC) Varipak 2HP 180VDC	Uni-Directional
D04		Bi-Directional
D05	(DC) Cycletrol 3HP 180VDC	

Dimensions and technical information are subject to change without notice

Maximum Inertia x 1000 kg-cm² [lb-in²] for standard package							
Stops	Motion Time [seconds]						
	0.458	0.611	0.764	0.917	1.222	1.528	1.833
2	0 [0]	12 [4]	38 [13]	76 [26]	140 [48]	214 [73]	298 [102]
3	6 [2]	32 [11]	76 [26]	146 [50]	258 [88]	389 [133]	538 [184]
4	29 [10]	94 [32]	208 [71]	380 [130]	664 [227]	995 [340]	1367 [467]
6	73 [25]	211 [72]	451 [154]	822 [281]	1419 [485]	2119 [724]	2909 [994]
8	138 [47]	383 [131]	811 [277]	1469 [502]	2528 [864]	3775 [1290]	5180 [1770]
12	325 [111]	878 [300]	1841 [629]	3319 [1134]	5706 [1950]	8510 [2908]	11670 [3988]
16	585 [200]	1571 [537]	3280 [1121]	5908 [2019]	10155 [3470]	15138 [5173]	20754 [7092]
Reducer Ratio							
	15	20	25	30	40	50	60

Other Motions (stops and index periods) available. Contact your DESTACO sales representative for more information.

Features

- 7300C Reducer (Ratios from 15:1 to 60:1)
- Double Extended Camshaft (Input Shaft)
- Center Thru Hole (Ø127 mm [Ø5.00 in.])
- 2 HP AC Drive Package with Inverter Duty Motor and Inverter Drive (up to 60 cpm)
- Cycle Cam and Limit Switch Mounted to Camshaft
- Right Hand Cam

Optional Accessories

- 2 hp DC Motor
- Varipak DC Motor Control (up to 30 cpm)
- 7350C Heavy Duty Reducer (Ratios from 10:1 to 60:1)
- Output Mechanical Overload Clutch – See Page 33
- EZ Mount Dial Adapter
- Stationary Center Post
- Dual Cam and Limit Switch
- Base Riser Blocks
- Electric Clutch-Brake
- Left Hand Cam
- Relief in Dwell for shot-pin applications

Output Load Capacity (loads carried during index):

Radial	20684 N [4650 lbs]
Thrust/Axial	51822 N [11650 lbs]
Moment	4579 N-m [40528 in-lb]

Typical Application Dial Diameter: 508 mm [20 in] to 1829 mm [72 in]

Accuracy ±38 arcsec / ±0,18 mm [±.007in] at 914,4 mm [36in] Radius

Repeatability ±10 arcsec / ±0,05 mm [±.002in] at 914,4 mm [36in] Radius



1305RDM SERIES

Rotary Index Drive | Dimensions

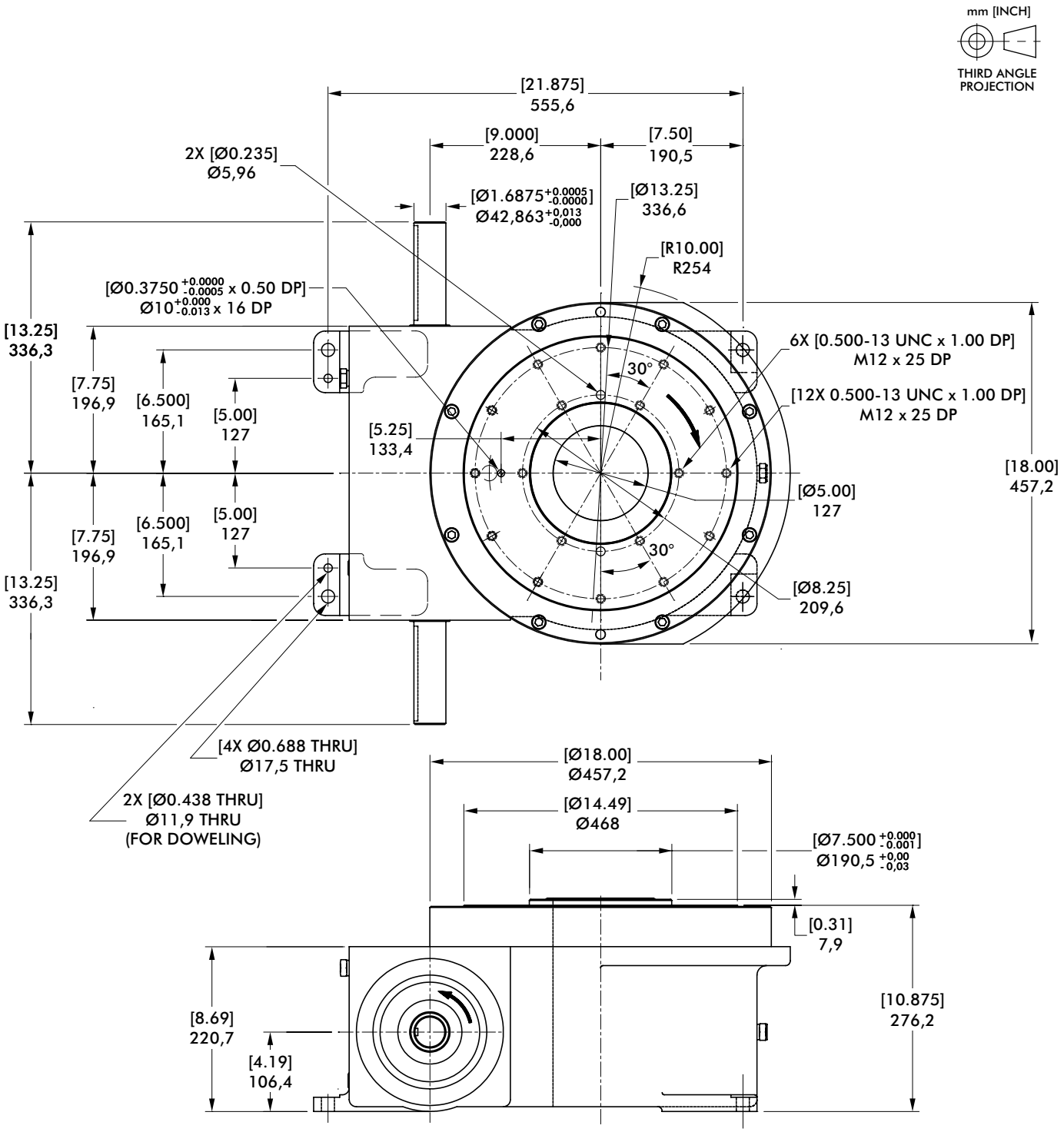

Dimensions and technical information are subject to change without notice

Center Post

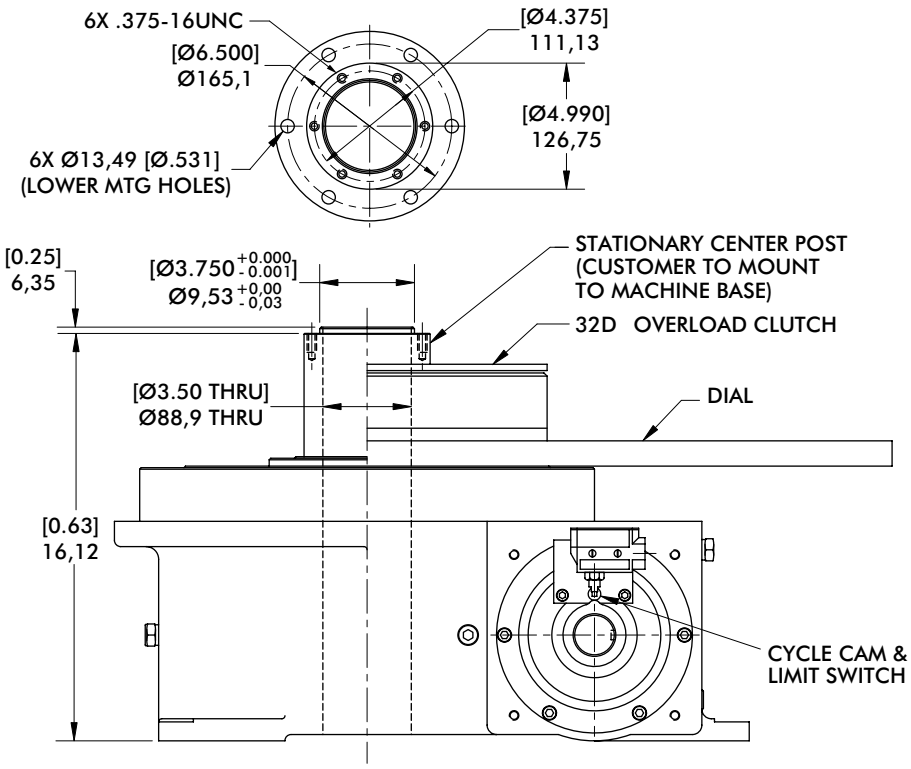

mm [INCH]

THIRD ANGLE PROJECTION

Proximity Switch

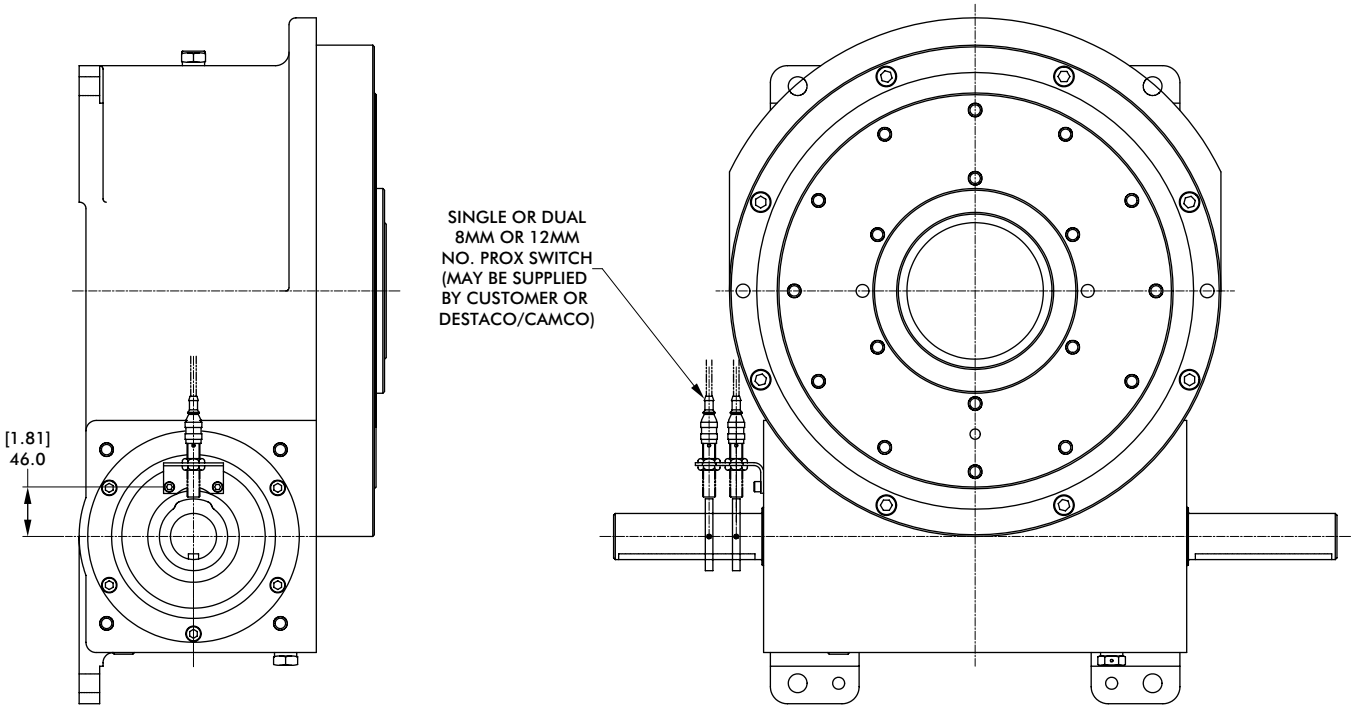

1305RDM SERIES

Rotary Index Drive | Dimensions

32D Overload Clutch

THRU-HOLE CLUTCH

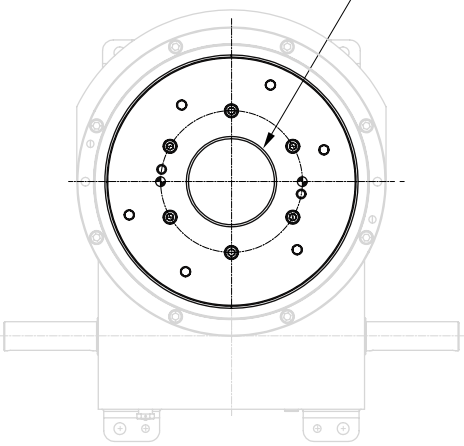

STANDARD CLUTCH

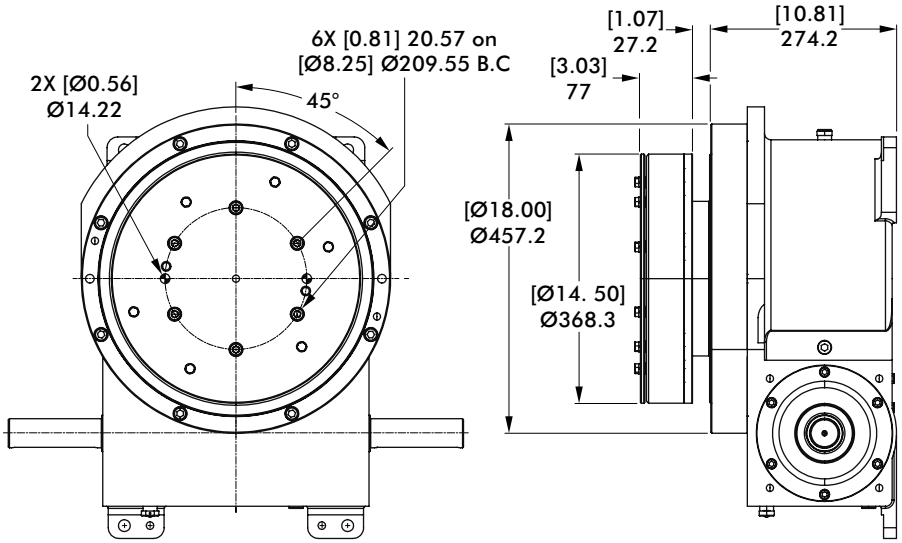

32D Overload Clutch with EZ Dial Mounting Adapter

mm [INCH]

THIRD ANGLE PROJECTION

THRU-HOLE EZ CLUTCH

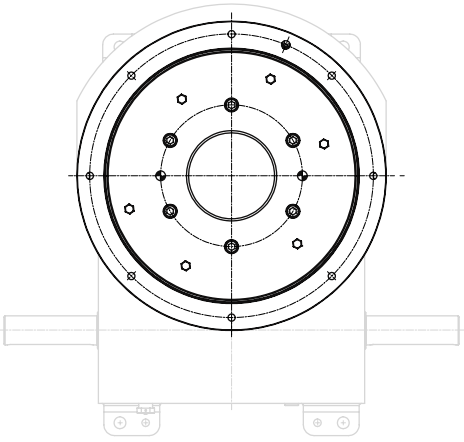

STANDARD EZ CLUTCH

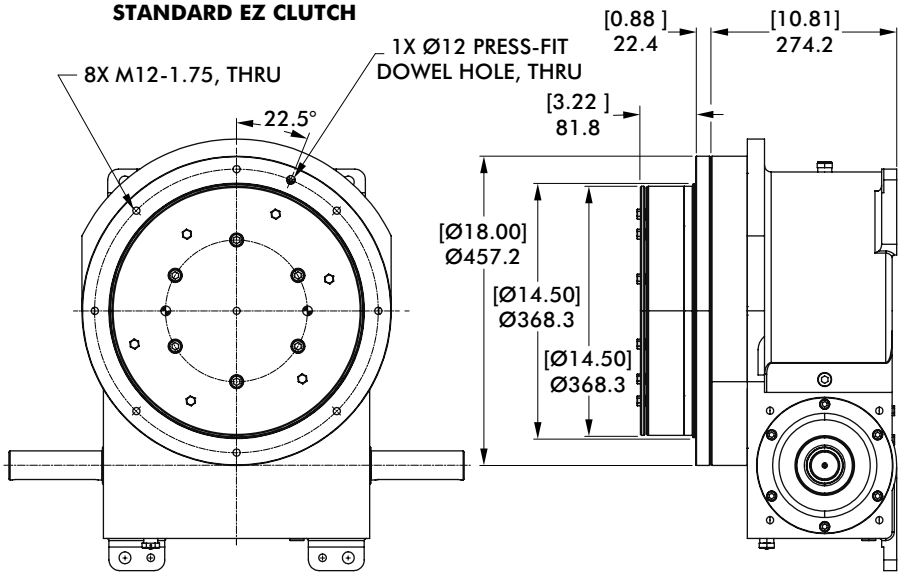

Model	Internal Inertia kg-m² [lb-in²]	Torque Setting N-m [in-lb]
32D	0,852 [2910]	960, 1469, 2260, 3503 [8500, 13000, 20000, 31000]

Dimensions and technical information are subject to change without notice

Notes

1800RDM SERIES

Rotary Index Drive | How To Order

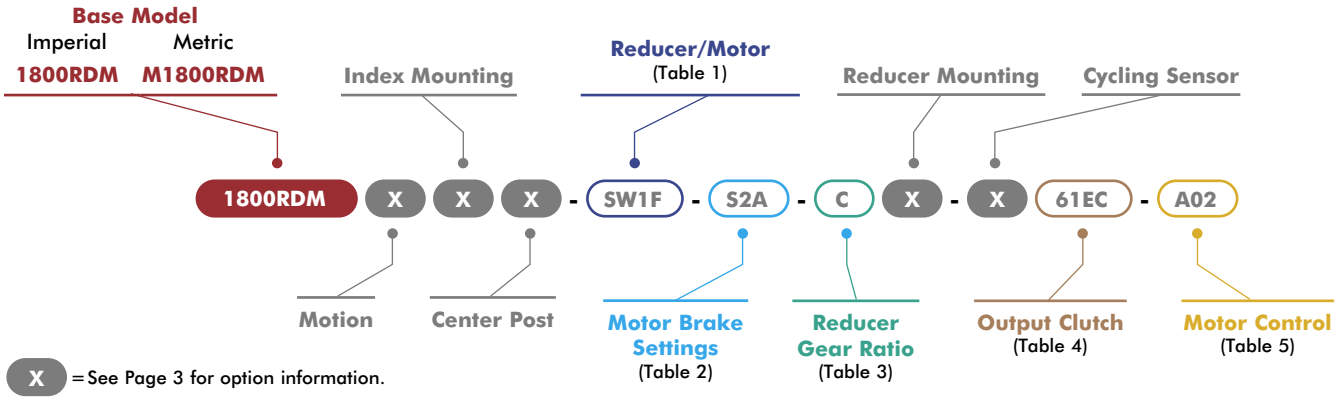

X = See Page 3 for option information.

1 Reducer/Motor Options

Code	Description
0000	No Reducer or Motor*
	7400C Motors
CD3A	Indexer with 7400C Adapter*
CS3B	CONE DRIVE 7400C W/145TC Reducer, SE Worm
CS3C	CONE DRIVE 7400C W/182TC Reducer, SE Worm
CS3D	CONE DRIVE 7400C Reducer w/ 2.0HP AC 145TC Motor, SE Worm
CS3E	CONE DRIVE 7400C Reducer w/ 3.0HP AC 182TC Motor, SE Worm
CS2F	CONE DRIVE 7400C Reducer w/2.0HP 180V DC 143TC Motor, SE Worm
CS2G	CONE DRIVE 7400C Reducer w/3.0HP 180V DC 145TC Motor, SE Worm
CD3B	CONE DRIVE 7400C W/145TC Reducer, DE Worm
CD3C	CONE DRIVE 7400C W/182TC Reducer, DE Worm
CD3D	CONE DRIVE 7400CReducer w/2.0HP AC 145TC Motor, DE Worm
CD3E	CONE DRIVE 7400CReducer w/3.0HP AC 182TC Motor, DE Worm
CD2F	CONE DRIVE 7400C Reducer w/ 2.0HP 180V DC 143TC Motor, DE Worm
CD2G	CONE DRIVE 7400C Reducer w/ 3.0HP 180V DC 145TC Motor, DE Worm
	SEW KH77 Motors
SW5A	Indexer with KH77 Adapter*
SW5H	SEW KH77DRN100L4 Reducer with 2.2Kw Motor (60Hz, 230/460V)
SW5J	SEW KH77DRN100L4 Reducer with 2.2Kw Motor (50Hz, 400V)
SW5K	SEW KH77DRN100L4 Reducer with 2.2Kw Motor (60Hz, 575V)
SW5L	SEW KH77DRN100L4 Reducer with 3.7Kw Motor (60Hz, 230/460V)
SW5M	SEW KH77DRN100L4 Reducer with 3.7Kw Motor (50Hz, 400V)
SW5N	SEW KH77DRN100L4 Reducer with 3.7Kw Motor(60Hz, 575V)
	SEW KH87 Motors
SW6A	Indexer with KH87 Adapter*
SW6B	SEW KH87DRN100L4 Reducer with 2.2Kw Motor/Brake Motor (60Hz, 230/460V)
SW6C	SEW KH87DRN100L4 Reducer with 2.2Kw Motor/Brake Motor (50Hz, 400V)
SW6D	SEW KH87DRN100L4 Reducer with 2.2Kw Motor/Brake Motor (60Hz, 575V)
SW6E	SEW KH87DRN100L4 Reducer with 3.7Kw Motor/Brake Motor (60Hz, 230/460V)
SW6F	SEW KH87DRN100L4 Reducer with 3.7Kw Motor/Brake Motor (50Hz, 400V)
SW6G	SEW KH87DRN100L4 Reducer with 3.7Kw Motor/Brake Motor (60Hz, 575V)
	STM RMI-150 Motors
RM8A	Indexer with RMI-150 Adapter*
RM8B	STM RMI-150/LFB/IEC100-B14 Reducer Only
RM8C	STM RMI-150/LFB/IEC112-B14 Reducer Only
RM8D	STM RMI-150/LFB Reducer with 2.2kW Motor
RM8E	STM RMI-150/LFB Reducer with 4.0kW Motor

*All Reducer/Motor adapters require Gear Ratio option to be 0.

2 Motor Brake*

Code	Description
000	No Brake
S1A	1.69 Nm (BE05)
S1B	2.49 Nm (BE05)
S1C	3.50 Nm (BE05)
S2A	4.97 Nm (BE1)
S2B	7.01 Nm (BE1)
S2C	9.94 Nm (BE1)
S3A	9.94 Nm (BE2)
S3B	14.01 Nm (BE2)
S3C	20.00 Nm (BE2)
S4A	20.00 Nm (BE5)
S4B	28.02 Nm (BE5)
S4C	40.00 Nm (BE5)
S4D	55.03 Nm (BE5)

*SEW Motor brake setting options only. All other motors use option code 000.

3 Reducer Gear Ratios*

Code	Description			
	7400C	SEW KH77	SEW KH87	STM RMI-150
0	N/A	N/A	N/A	N/A
A	10:1	9.56:1	10.00:1	10:1
B	15:1	15.84:1	14.45:1	15:1
C	20:1	20.25:1	19.45:1	20:1
D	25:1	29.27:1	31.39:1	28:1
E	30:1	40.04:1	36.52:1	40:1
F	40:1	51.18:1	49.16:1	49:1
G	50:1	58.34:1	63.00:1	56:1
H	60:1	73.99:1	70.46:1	70:1

*All Reducer/Motor adapters require Gear Ratio option to be 0.
Select Gear ratio column based on the reducer type selected.

4 Output Clutch & Settings

1800RDM Imperial Clutch Models

Code	Description
0000	No Output Overload Clutch
61DA	61D, W/23000 In-Lb, SDP*
61DB	61D, W/36000 In-Lb, SDP*
61DC	61D, W/44000 In-Lb, SDP*
61DD	61D, W/50000 In-Lb, SDP*
61DE	61D, W/60000 In-Lb, SDP*
61DF	61D, W/23000 In-Lb, THDP
61DG	61D, W/36000 In-Lb, THDP
61DH	61D, W/44000 In-Lb, THDP
61DJ	61D, W/50000 In-Lb, THDP
61DK	61D, W/60000 In-Lb, THDP
61EA	61D, W/23000 In-Lb, SDP, EZ*
61EB	61D, W/36000 In-Lb, SDP, EZ*
61EC	61D, W/44000 In-Lb, SDP, EZ*
61ED	61D, W/50000 In-Lb, SDP, EZ*
61EE	61D, W/60000 In-Lb, SDP, EZ*
61EF	61D, W/23000 In-Lb, THDP, EZ
61EG	61D, W/36000 In-Lb, THDP, EZ
61EH	61D, W/44000 In-Lb, THDP, EZ
61EJ	61D, W/50000 In-Lb, THDP, EZ
61EK	61D, W/60000 In-Lb, THDP, EZ

M1800RDM Metric Clutch Models

Code	Description
0000	No Output Overload Clutch
M61DA	M61D, W/2600 Nm, SDP*
M61DB	M61D, W/4070 Nm, SDP*
M61DC	M61D, W/4970 Nm, SDP*
M61DD	M61D, W/5650 Nm, SDP*
M61DE	M61D, W/6780 Nm, SDP*
M61DF	M61D, W/2600 Nm, THDP
M61DG	M61D, W/4070 Nm, THDP
M61DH	M61D, W/4970 Nm, THDP
M61DJ	M61D, W/5650 Nm, THDP
M61DK	M61D, W/6780 Nm, THDP
M61EA	M61D, W/2600 Nm, SDP, EZ*
M61EB	M61D, W/4070 Nm, SDP, EZ*
M61EC	M61D, W/4970 Nm, SDP, EZ*
M61ED	M61D, W/5650 Nm, SDP, EZ*
M61EE	M61D, W/6780 Nm, SDP, EZ*
M61EF	M61D, W/2600 Nm, THDP, EZ
M61EG	M61D, W/4070 Nm, THDP, EZ
M61EH	M61D, W/4970 Nm, THDP, EZ
M61EJ	M61D, W/5650 Nm, THDP, EZ
M61EK	M61D, W/6780 Nm, THDP, EZ

*Cannot be used with center post option P.

5 Motor Control

Code	Description	
000	NO MOTOR CONTROL	
A01	(AC) PowerFlex 523 1HP	120V 1Ph
A02		240V 1Ph
A03		480V 3Ph
A04	(AC) PowerFlex 525 1HP	120V 1Ph
A05		240V 1Ph
A06		480V 3Ph
A07	(AC) PowerFlex 523 2HP	240V 3Ph
A08		480V 3Ph
A09	(AC) PowerFlex 525 2HP	240V 3Ph
A10		480V 3Ph
A11	(AC) PowerFlex 523 3HP	240V 3Ph
A12		480V 3Ph
A13	(AC) PowerFlex 525 3HP	240V 1Ph
A14		480V 3Ph
A15	(AC) PowerFlex 523 5HP	480V 3Ph
A16		600V 3Ph
A17	(AC) PowerFlex 525 5HP	480V 3Ph
A18		600V 3Ph
D01	(DC) Varipak 1HP 90VDC	Uni-Directional
D02		Bi-Directional
D03	(DC) Varipak 2HP 180VDC	Uni-Directional
D04		Bi-Directional
D05	(DC) Cycletrol 3HP 180VDC	

Maximum Inertia x 1000 kg-cm² [lb-in²] for standard package							
Stops	Motion Time [seconds]						
	0.458	0.611	0.764	0.917	1.222	1.528	1.833
2	0 [0]	0 [0]	23 [8]	79 [27]	266 [91]	533 [182]	749 [256]
3	0 [0]	32 [11]	120 [41]	255 [87]	720 [246]	1381 [472]	1917 [655]
4	3 [1]	91 [31]	249 [85]	495 [169]	1332 [455]	2523 [862]	3488 [1192]
6	56 [19]	243 [83]	577 [197]	1097 [375]	2871 [981]	5390 [1842]	7439 [2542]
8	132 [45]	462 [158]	1056 [361]	1984 [678]	5133 [1754]	9616 [3286]	13257 [4530]
12	351 [120]	1100 [376]	2435 [832]	4518 [1544]	11606 [3966]	21690 [7412]	29881 [10211]
16	656 [224]	1987 [679]	4360 [1490]	8065 [2756]	20666 [7062]	38593 [13188]	53152 [18163]
Reducer Ratio							
	15	20	25	30	40	50	60

Other Motions (stops and index periods) available. Contact your DESTACO sales representative for more information.

Features

- 7400C Reducer (Ratios from 15:1 to 60:1)
- Double Extended Camshaft (Input Shaft)
- Center Thru Hole (Ø165,1 mm [Ø6.50 in.])
- 2 or 3 HP AC Drive Package with Inverter Duty Motor and Inverter Drive (up to 60 cpm)
- Cycle Cam and Limit Switch Mounted to Camshaft
- Right Hand Cam

Optional Accessories

- 2 hp DC Motor with Varipak DC Motor Control (up to 30 cpm)
- 3 hp DC Motor
- 7500C Heavy Duty Reducer (Ratios from 10:1 to 60:1)
- Output Mechanical Overload Clutch – See Page 39
- EZ Mount Dial Adapter
- Stationary Center Post
- Dual Cam and Limit Switch
- Base Riser Blocks
- Electric Clutch-Brake
- Left Hand Cam
- Relief in Dwell for shot-pin applications

Output Load Capacity (loads carried during index):

Radial	26022 N [5850 lbs]
Thrust/Axial	61166 N [14650 lbs]
Moment	7696 N-m [68119 in-lb]

Typical Application Dial Diameter: 660 mm [26 in] to 1829 mm [96 in]

Accuracy ±27 arcsec / ±0,15 mm [±.006in] at 1219,2 mm [48in] Radius

Repeatability ±7 arcsec / ±0,041 mm [±.0016in] at 1219,2 mm [48in] Radius

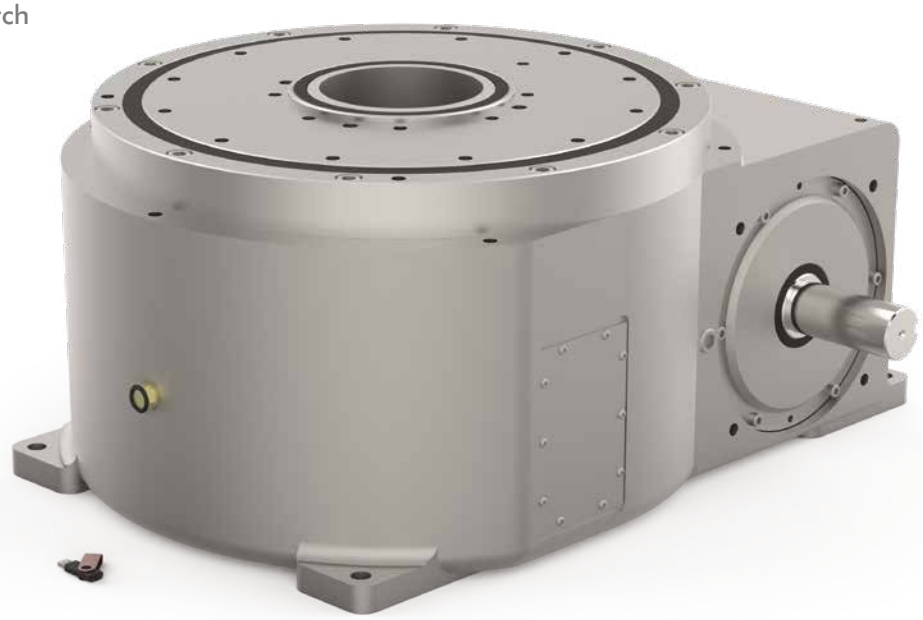

1800RDM SERIES

Rotary Index Drive | Dimensions

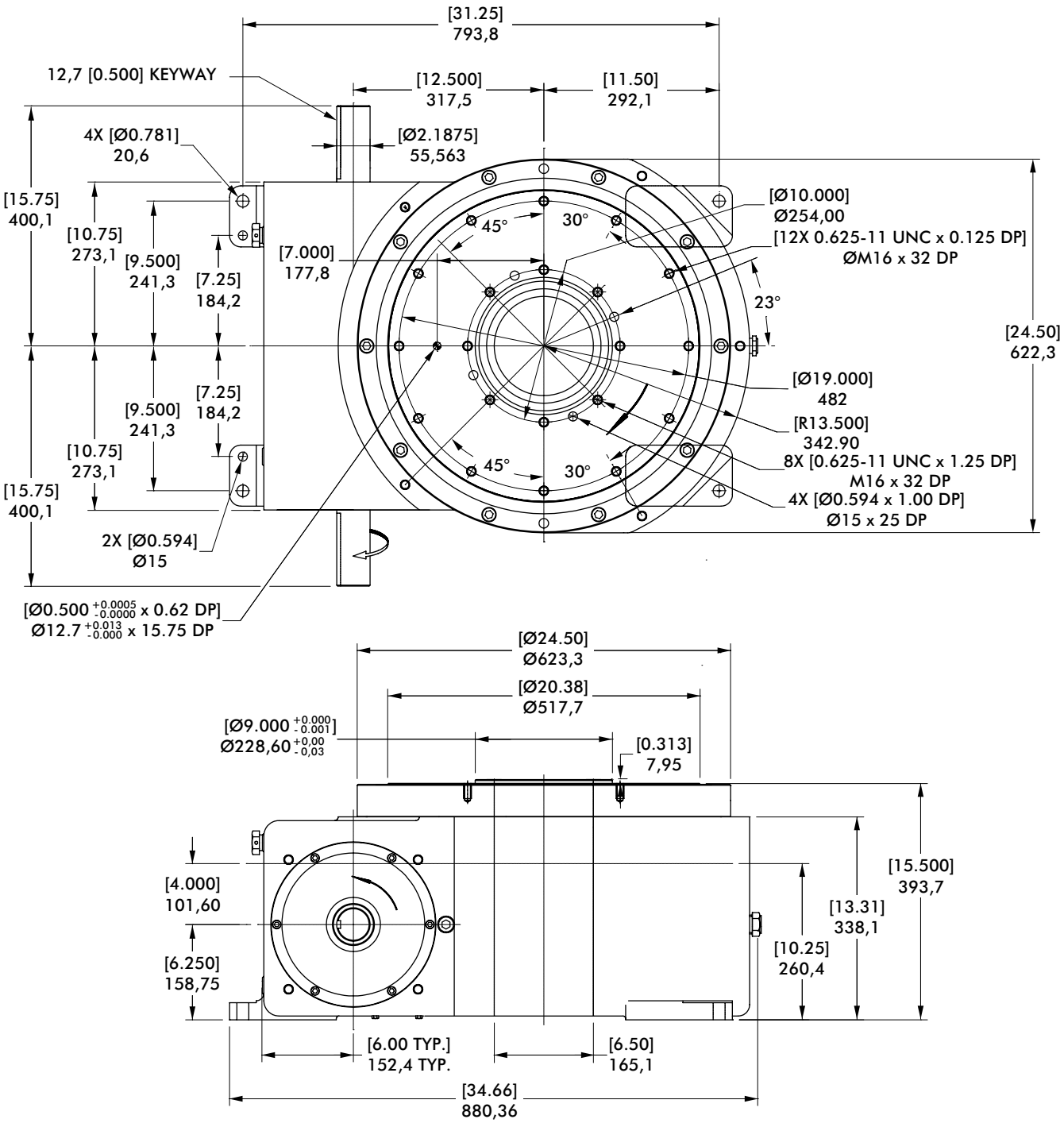

mm [INCH]

THIRD ANGLE PROJECTION

Dimensions and technical information are subject to change without notice

Center Post

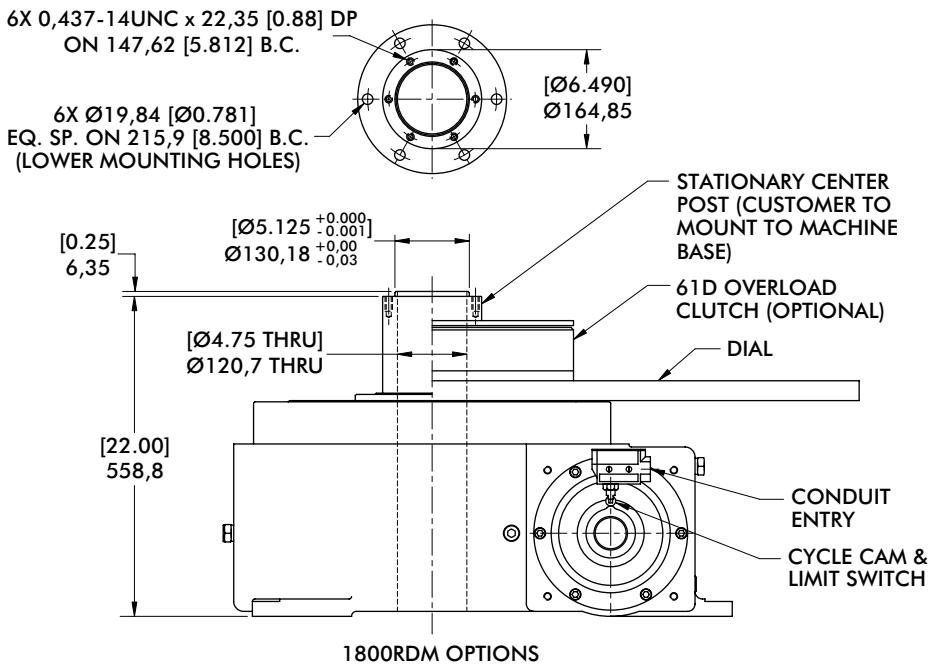

mm [INCH]

THIRD ANGLE PROJECTION

Proximity Switch

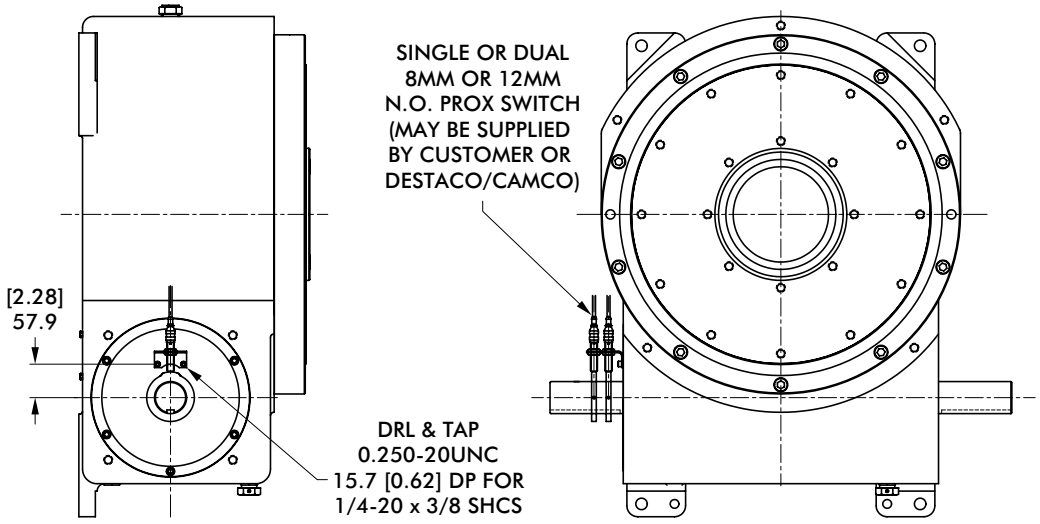

1800RDM SERIES

Rotary Index Drive | Dimensions

61D Overload Clutch

THRU-HOLE CLUTCH

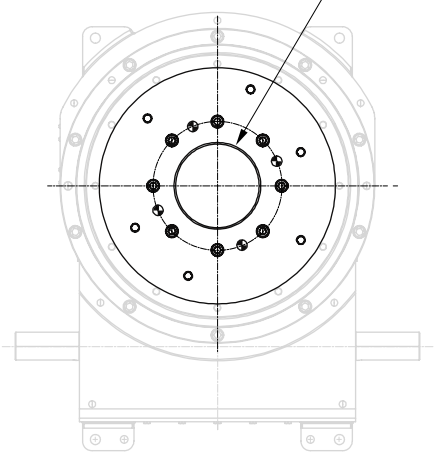

STANDARD CLUTCH

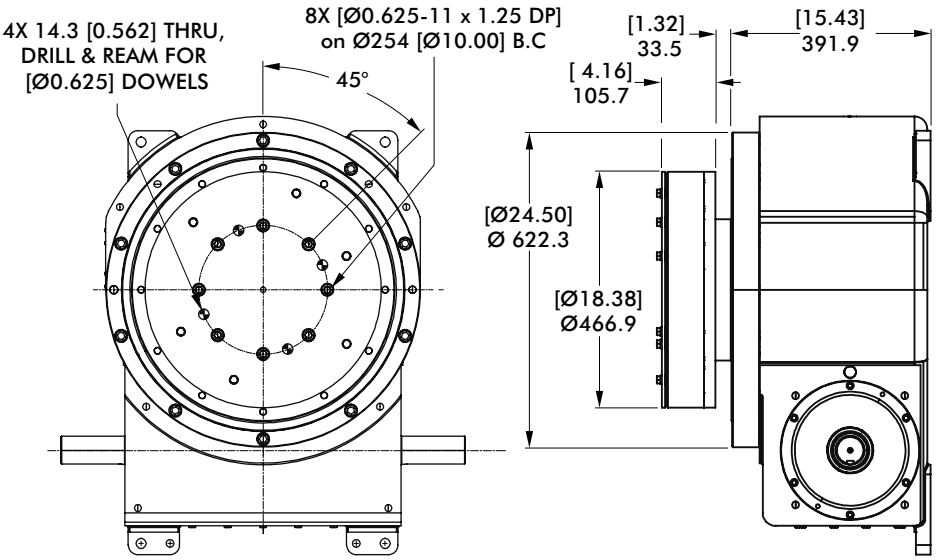

mm [INCH]

THIRD ANGLE PROJECTION

61D Overload Clutch with EZ Dial Mounting Adapter

THRU-HOLE EZ CLUTCH

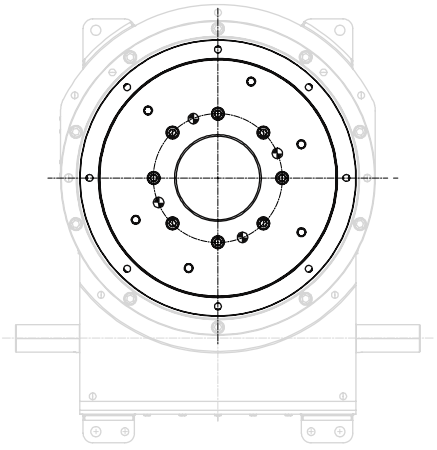

STANDARD EZ CLUTCH

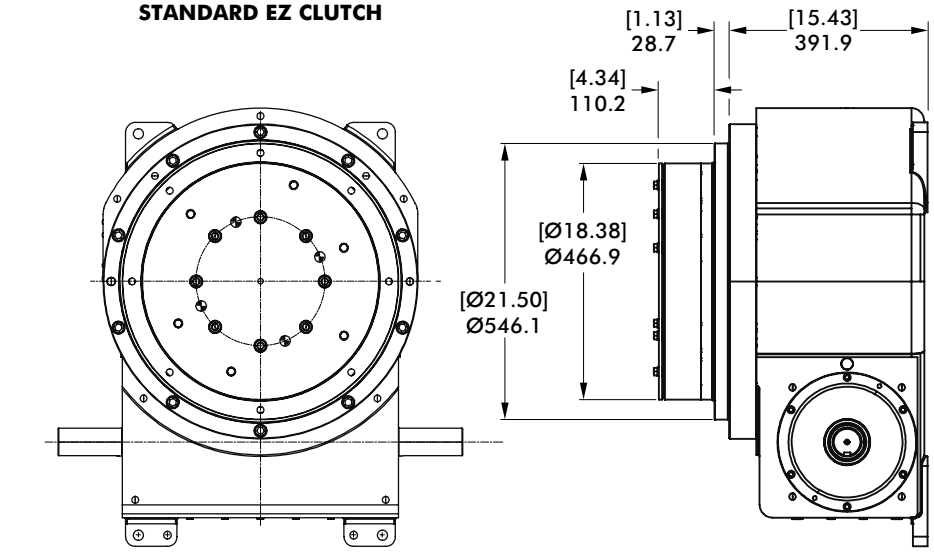

Model	Internal Inertia kg-m² [lb-in²]	Torque Setting N-m [in-lb]
61D	1,434 [4900]	2599, 4067, 4971, 5649, 6779 [23000, 36000, 44000, 50000, 60000]

Dimensions and technical information are subject to change without notice

Notes

PRECISION INDEXING SOLUTIONS

Table of Contents

INDEXERS

Servo Positioners



GTB Series
Globoidal (Roller Gear)
Servo Positioner.....IN-SRV-1



RSD Series
Rotary Servo Drives.....IN-SRV-39

Mechanical Indexers



RDM Series
Rotary Index Drive IN-MCH-2



RD Series
Roller Dial Index Drive..... IN-MCH-18



E Series
Heavy-Duty Index Drive IN-MCH-30



RA Series
Right Angle Index Drive IN-MCH-42



RGD/RGS Series
Roller Gear Index Drive IN-MCH-52



P Series
Parallel Shaft/Flange Drive.... IN-MCH-72



RNG Series
Ring Drive Dial Indexer.....IN-MCH-84

OVERLOAD CLUTCHES



Overload Clutches
Output Overload..... IN-CLU-1

CUSTOM CAMS



Custom Cams
Cam Design Solutions IN-CAM-1

CONVEYORS



Rite-Link Series
Thin-Profile.....IN-CNV-1



Precision Link Series
Table-Top IN-CNV-4



Precision Link Series
Heavy-Duty IN-CNV-16

PARTS HANDLERS



LPP Series
Linear Part Handlers IN-PRT-2



RPP Series
Rotary Part Handlers IN-PRT-8

Dimensions and technical information are subject to change without notice

ROLLER DIAL INDEX DRIVES



Features:

CAMCO Roller Dial Index Drives have a robust, flexible design with superior load capabilities. Other features include:

Short camshaft motion periods, due to oversized roller gear cam design, are well suited for continuous running applications or for special motion requirements such as oscillating motions

Universal mounting including a horizontal mounting ideal for trunnion applications

Option Center Thru-Hole facilitates passage of electrical wiring, pneumatic lines or mechanical linkages

Optional Stationary Center Post with thru-hole provides mounting for upper tool plate

Table of Contents

How to Order 3
425RD 5
800RD 7
1301RD 9
1801RD 11

RD SERIES

Roller Dial Index Drives | How To Order

Base Model Description kW [HP]

425RD	w/ R180 reducer & 0.25 [1/3] AC motor (220/440V)
800RD	w/ 7300C reducer & 1.49 [2] AC motor (220/440V)
1301RD	w/ 7350C reducer & 1.49 [2] AC motor (220/440V)
1801RD	w/ 7500C reducer & 2.24 [3] AC motor (220/440V)

Control (only available with these models)

1	1 HP 120V 425RD only
2	1 HP 240V 425RD only
3	1 HP 440V 425RD only
4	2 HP 240V 800RD & 1301RD only
5	2 HP 440V 800RD & 1301RD only
6	3 HP 240V 1801RDM only
7	3 HP 440V 1801RDM only

Motion

	Stops	Index Period
A	2	330
B	3	330
C	4	330
D	6	330
E	8	330
F	12	330
G	16	330*

*1301RD & 1801RD

Index Mounting (See Figure 1)

1 **2** **3** **4** **5** **6**

Reducer Ratio

A	15
B	20
C	25
D	30
E	40
F	50
G	60

Reducer Mounting (See Figure 4)

A	**J**
B	**K**
C	**L**
D	**M**
E	**N**
F	**P**
G	**R**
H	**S**

Signal Switch

M Mechanical
P Proximity

Signal Switch Side (See Figure 2)

R Reducer
S Shaft

Example: MR, MS, PR or PS

Note about signal switch options:
a) Mechanical is a single switch with cam.
b) Proximity option is a mounting bracket for 8 or 12 mm proximity switch. A proximity switch will not be supplied. Cam supplied as target.

Other Motions (stops and index periods) available. Contact your DESTACO sales representative for more information.

Input Shaft Configuration/Rotation (Figure 1)

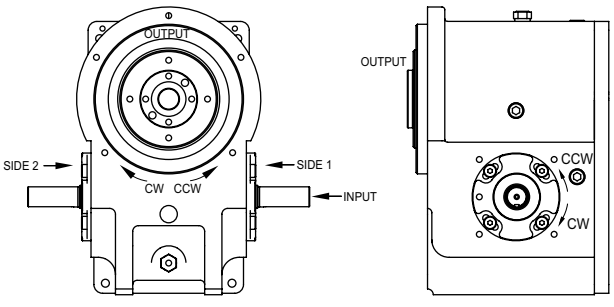

Relative Rotation for Right Hand Cam:

CW Input Side 1 CCW Output
CCW Input Side 2 CWW Output

NOTE: Input can be driven in either direction

Signal Switch Mounting Position (Figure 2)

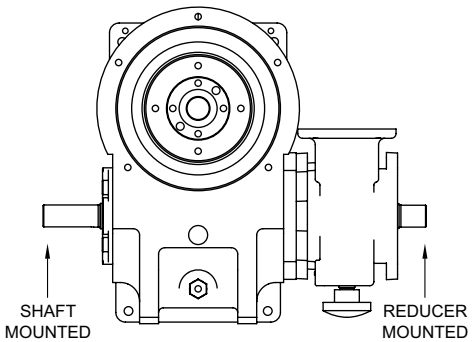

Roller Dial Index Drives | Input/Output Orientation (Figure 3)

OVOI (output vertical, over input)	OVUI (output vertical, under input)	OHOI (output horizontal, over input)	OHUI (output horizontal, under input)	H-S1-UP (output horizontal, side 1 up)	H-S2-UP (output horizontal, side 2 up)
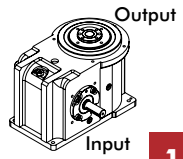 1	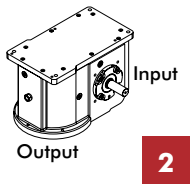 2	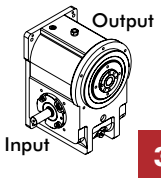 3	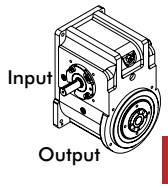 4	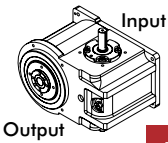 5	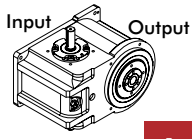 6

Gear Reducer Mounting Positions (Figure 4)

	Mounting "A"		Mounting "B"	
	RD Worm	LD Worm	RD Worm	LD Worm
SIDE 1	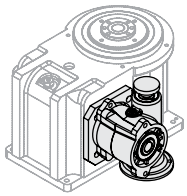 A	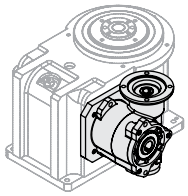 B	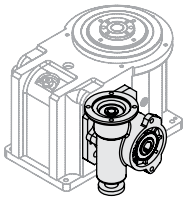 C	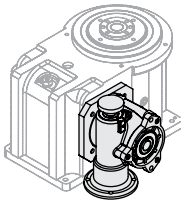 D
SIDE 2	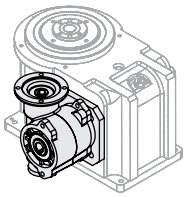 E	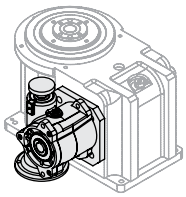 F	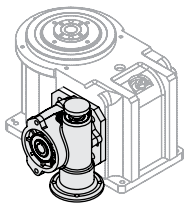 G	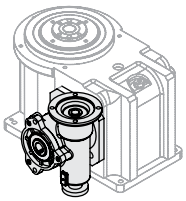 H

	Mounting "C"		Mounting "D"	
	RD Worm	LD Worm	RD Worm	LD Worm
SIDE 1	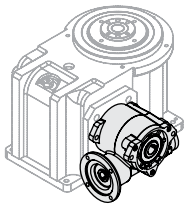 J	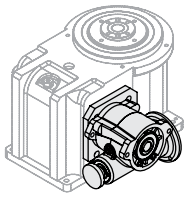 K	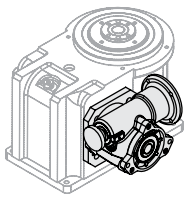 L	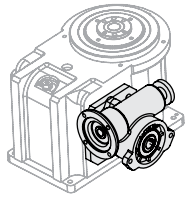 M
SIDE 2	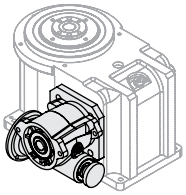 N	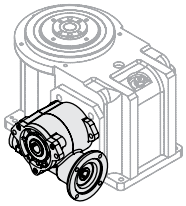 P	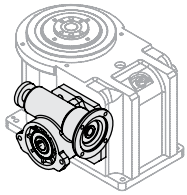 R	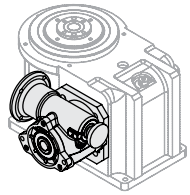 S

425RD SERIES

Roller Dial Index Drives | Dimensions

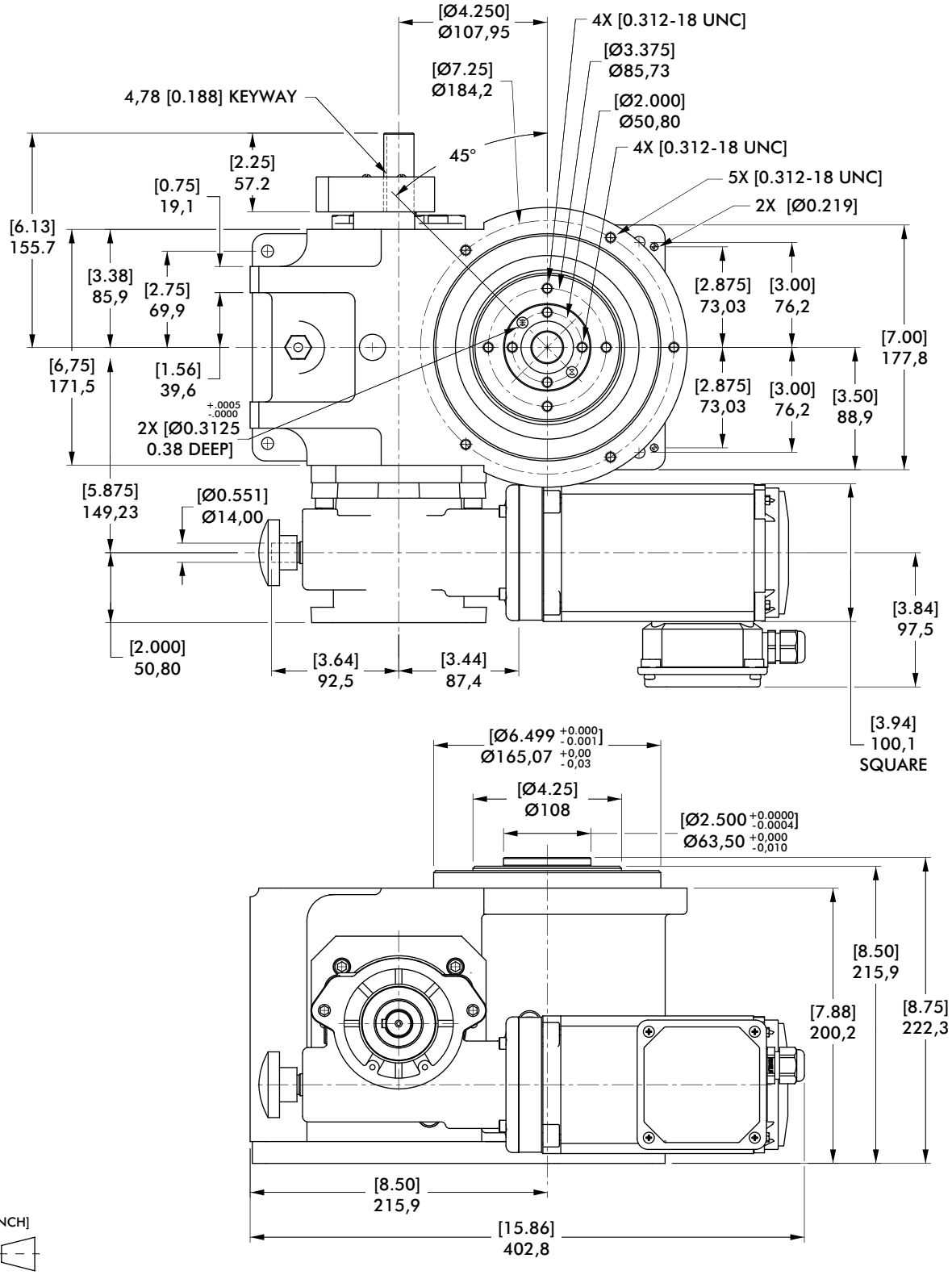

mm [INCH]

THIRD ANGLE PROJECTION

Dimensions and technical information are subject to change without notice

Maximum Inertia x 1000 kg-cm² [lb-in²] for standard package							
Stops	Motion Time [seconds]						
	0.458	0.611	0.764	0.917	1.222	1.528	1.833
2	0 [0]	3 [1]	6 [2]	12 [4]	32 [11]	47 [16]	64 [22]
3	3 [1]	6 [2]	18 [6]	32 [11]	73 [25]	108 [37]	146 [50]
4	3 [1]	15 [5]	29 [10]	56 [19]	129 [44]	193 [66]	263 [90]
6	12 [4]	32 [11]	70 [24]	129 [44]	293 [100]	439 [150]	457 [156]
8	20 [7]	59 [20]	126 [43]	231 [79]	457 [156]	457 [156]	457 [156]
12	47 [16]	132 [45]	260 [89]	398 [136]	430 [147]	430 [147]	430 [147]
Reducer Ratio							
	15	20	25	30	40	50	60

Features

- R180 Reducer (ratios from 15:1 to 60:1)
  - Double Extended Worm Shaft (Input)
  - Worm Shaft Handwheel
- Double Extended Camshaft (Input Shaft)
- 1/3 HP AC Drive Package with Inverter Duty Motor and IM-pAC AC Drive (up to 60 cpm)
- R225 Reducer with 1 HP AC or DC Motor (ratios of 5:1 to 60:1)
- Cycle Cam and Limit Switch Mounted to Camshaft
- Right Hand Cam

Optional Accessories

- 1/3 hp DC Motor
- Varipak DC Motor Control (up to 30 cpm)
- 2.8D Output Overload Clutch
  - Available Settings (in-lbs): 400, 480, 700, 850, 1100, 1300, 1800, 2200, 3100
- Center Thru Hole (0.81 in. Diameter)
- Stationary Center Post
- Dual Cam and Limit Switch
- Left Hand Cam
- Relief in Dwell for shot-pin applications
- Universal Mounting Capability
- Custom Dial Plate

Output Load Capacity (loads carried during index):

Radial	12010 N [2700 lbs]
Thrust/Axial	717 N [1600 lbs]
Moment	655 N-m [5800 in-lbs]

Accuracy ±47 arcsec / ±0,025 mm [±.0027 in] at 304,8 mm [12 in] Radius

Repeatability ±12 arcsec / ±0,018 mm [±.0007 in] at 304,8 mm [12 in] Radius

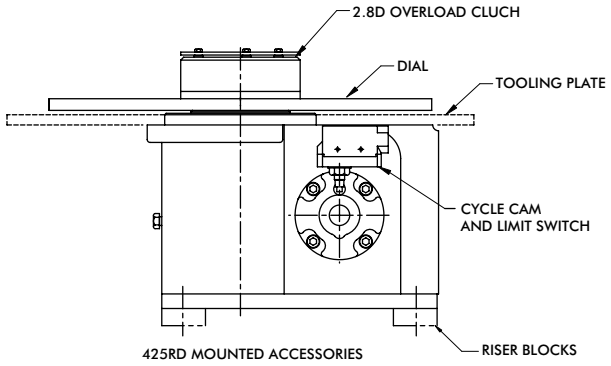

425RD MOUNTED ACCESSORIES

Unless otherwise noted, all dimensions are in inches.

800RD SERIES

Roller Dial Index Drives | Dimensions

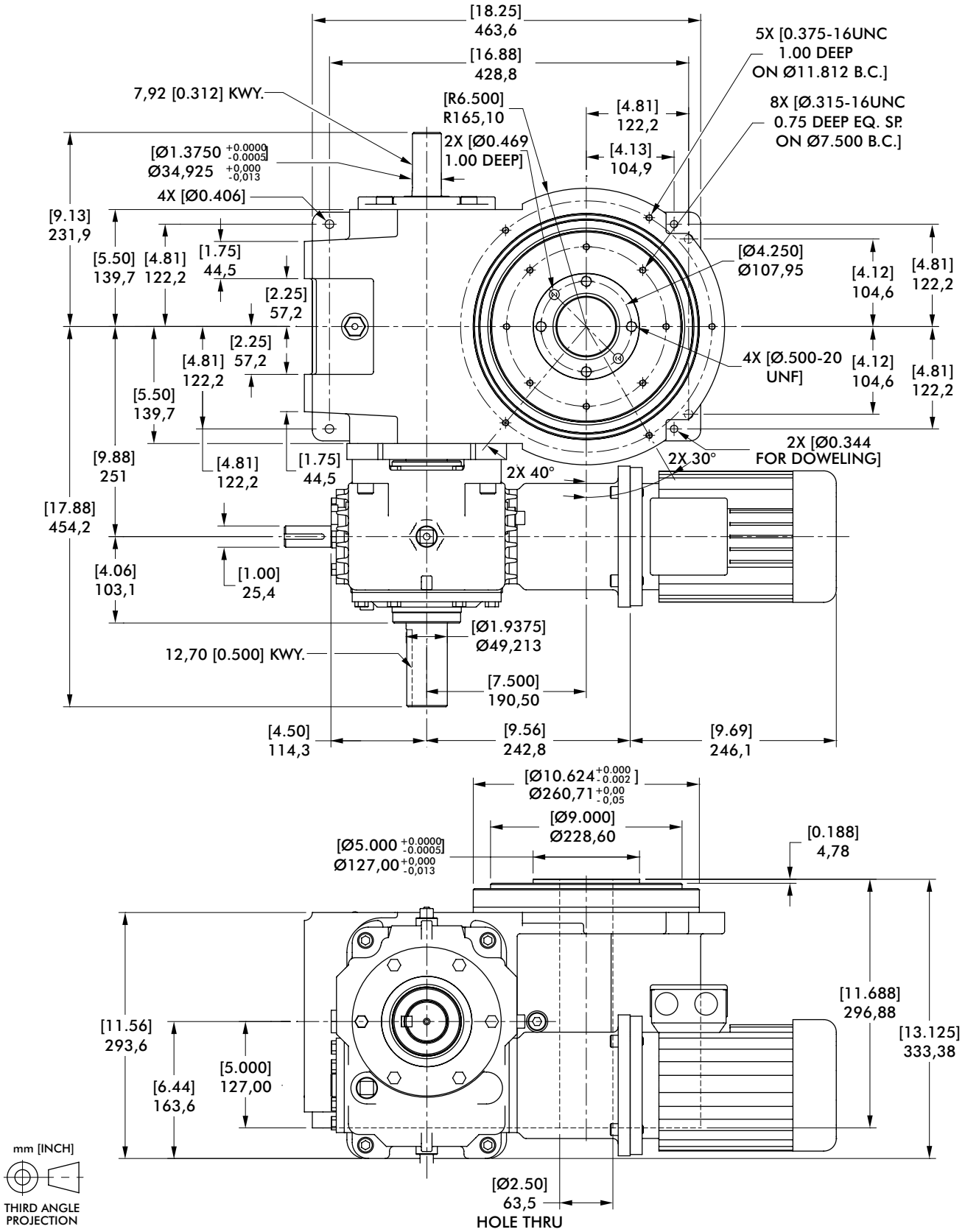

Dimensions and technical information are subject to change without notice

Maximum Inertia x 1000 kg-cm² [lb-in²] for standard package							
Stops	Motion Time [seconds]						
	0.458	0.611	0.764	0.917	1.222	1.528	1.833
2	6 [2]	23 [8]	50 [17]	94 [32]	161 [55]	243 [83]	334 [114]
3	20 [7]	56 [19]	117 [40]	211 [72]	366 [125]	547 [187]	755 [258]
4	38 [13]	102 [35]	211 [72]	380 [130]	653 [223]	977 [334]	1343 [459]
6	88 [30]	231 [79]	480 [164]	857 [293]	1475 [504]	2204 [753]	3026 [1034]
8	158 [54]	416 [142]	855 [292]	1525 [521]	2625 [897]	3605 [1232]	3605 [1232]
12	360 [123]	913 [312]	1528 [522]	2324 [794]	3383 [1156]	3383 [1156]	3383 [1156]
Reducer Ratio							
	15	20	25	30	40	50	60

Features

- 7300C Reducer (Ratios from 15:1 to 60:1)
  - Double Extended Worm Shaft (Input)
  - Motor Adapter and Coupling
- Double Extended Camshaft (Input Shaft)
- 1 HP AC Drive Package with Inverter Duty Motor and IM-pAC AC Drive (up to 60 cpm)
- Cycle Cam and Limit Switch Mounted to Camshaft
- Right Hand Cam

Optional Accessories

- 7350C Reducer (ratios from 5:1 to 60:1) with 1 hp AC or DC Motor
- 1 hp DC Motor
- Varipak DC Motor Control (up to 30 cpm)
- Output Overload Clutch model 7.8D
  - Available Settings (in-lbs): 1400, 1700, 2600, 3200, 4200, 5000, 7200, 10,000
- Output Overload Clutch model 18D
  - Available Settings (in-lbs): 5000, 7000, 7800, 10,000, 12,000, 16,000, 19,000, 21,000, 27,000, 42,000, 45,000
- Center Thru Hole (2.50 in. Diameter)
- Stationary Center Post
- Dual Cam and Limit Switch
- Left Hand Cam
- Relief in Dwell for shot-pin applications
- Universal Mounting Capability
- Custom Dial Plate

Output Load Capacity (loads carried during index):

Radial	22139 N [4977 lbs]
Thrust/Axial	15840 N [3561 lbs]
Moment	2531 N-m [22398 in-lbs]

Accuracy ±30 arcsec / ±0,102 mm [±.004 in] at 609,6 mm [24 in] Radius

Repeatability ±8 arcsec / ±0,023 mm [±.0009 in] at 609,6 mm [24 in] Radius

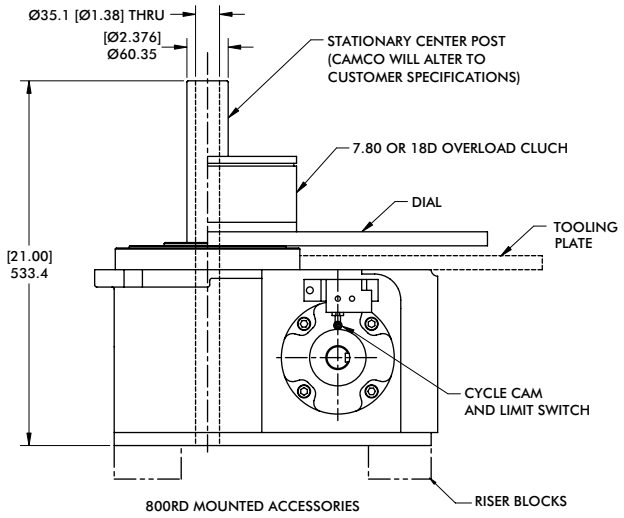

Unless otherwise noted, all dimensions are in inches.

1301RD SERIES

Roller Dial Index Drives | Dimensions

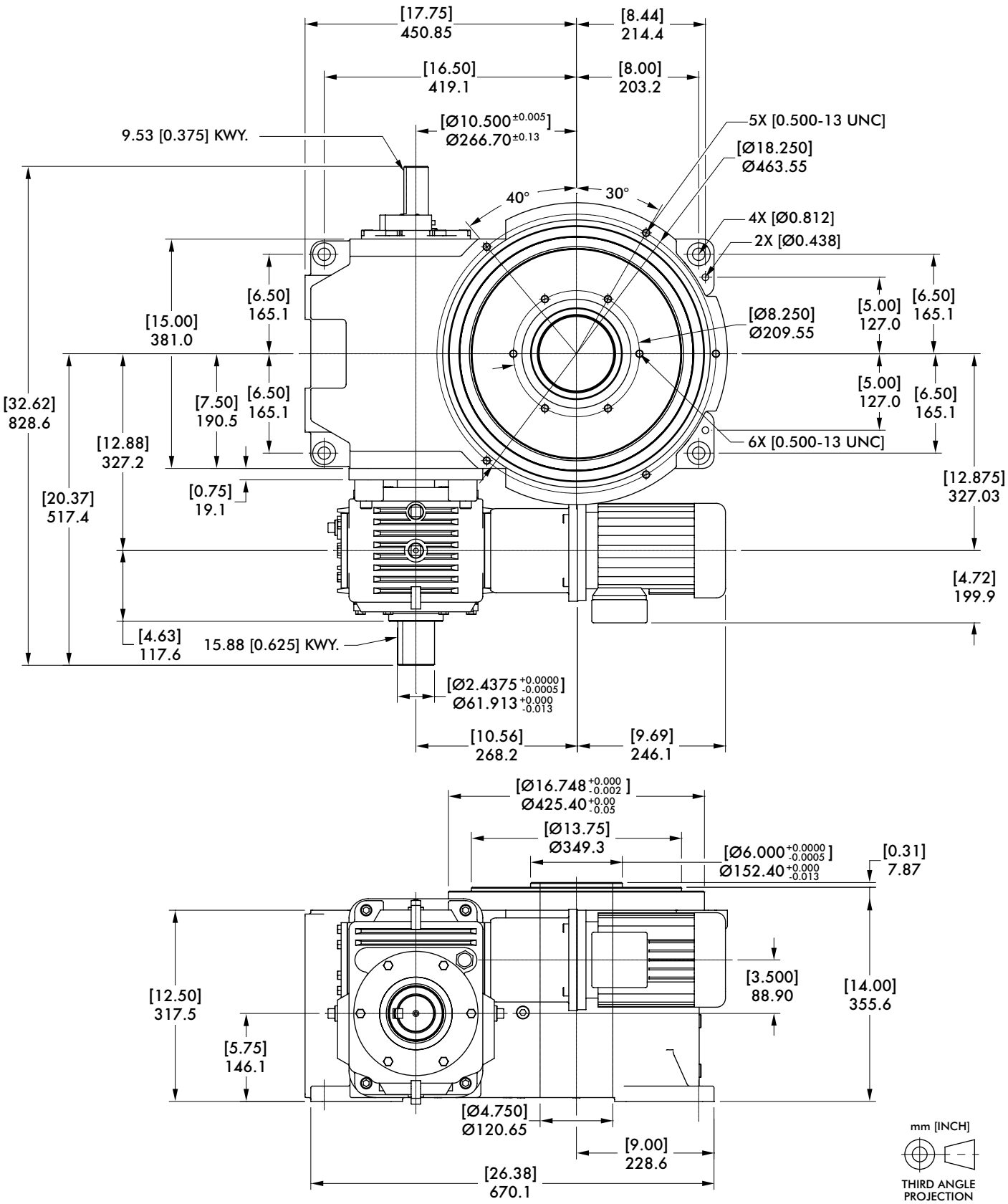

Dimensions and technical information are subject to change without notice

Maximum Inertia x 1000 kg-cm² [lb-in²] for standard package							
Stops	Motion Time [seconds]						
	0.458	0.611	0.764	0.917	1.222	1.528	1.833
2	0 [0]	15 [5]	44 [15]	85 [29]	149 [51]	228 [78]	316 [108]
3	12 [4]	47 [16]	108 [37]	199 [68]	348 [119]	524 [179]	720 [246]
4	29 [10]	91 [31]	196 [67]	360 [123]	626 [214]	939 [321]	1288 [440]
6	76 [26]	214 [73]	454 [155]	822 [281]	1419 [485]	2122 [725]	2912 [995]
8	140 [48]	386 [132]	814 [278]	1472 [503]	2531 [865]	3778 [1291]	5183 [1771]
12	325 [111]	881 [301]	1844 [630]	3321 [1135]	5709 [1951]	8513 [2909]	11673 [3989]
16	588 [201]	1574 [538]	3283 [1122]	5911 [2020]	10158 [3471]	15141 [5174]	20757 [7093]
Reducer Ratio							
	15	20	25	30	40	50	60

Features

- 7350C Reducer (Ratios from 15:1 to 60:1)
  - Double Extended Worm Shaft (Input)
  - Motor Adapter and Coupling
- Double Extended Camshaft (Input Shaft)
- 2 HP AC Drive Package with Inverter Duty Motor and Inverter Drive (up to 60 cpm)
- Cycle Cam and Limit Switch Mounted to Camshaft
- Right Hand Cam

Optional Accessories

- 7400C Reducer (Ratios from 5:1 to 60:1) with Motor Adapter and Coupling
- 2 hp DC Motor
- Varipak DC Motor Control (up to 30 cpm)
- Output Overload Clutch model 31D
  - Available Settings (in-lbs): 8500, 13,000, 20,000, 31,000
- Center Thru Hole (4.75 in. Diameter)
- Stationary Center Post
- Dual Cam and Limit Switch
- Left Hand Cam
- Relief in Dwell for shot-pin applications
- Universal Mounting Capability
- Custom Dial Plate

Output Load Capacity (loads carried during index):

Radial	70282 N [15800 lbs]
Thrust/Axial	48041N [10800 lbs]
Moment	12315 N-m [109000 in-lbs]

Accuracy ±39 arcsec / ±0,173 mm [±.0068 in] at 914,4 mm [36 in] Radius

Repeatability ±10 arcsec / ±0,043 mm [±.0017 in] at 914,4 mm [36 in] Radius

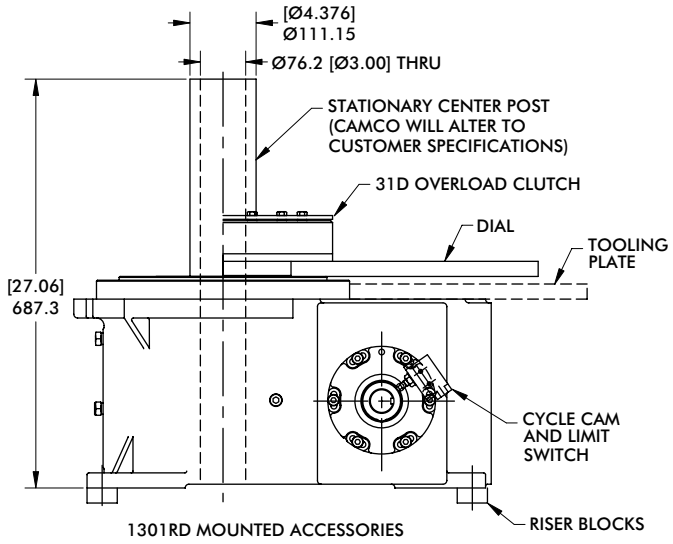

1301RD MOUNTED ACCESSORIES

Unless otherwise noted, all dimensions are in inches.

1801RD SERIES

Roller Dial Index Drives | Dimensions

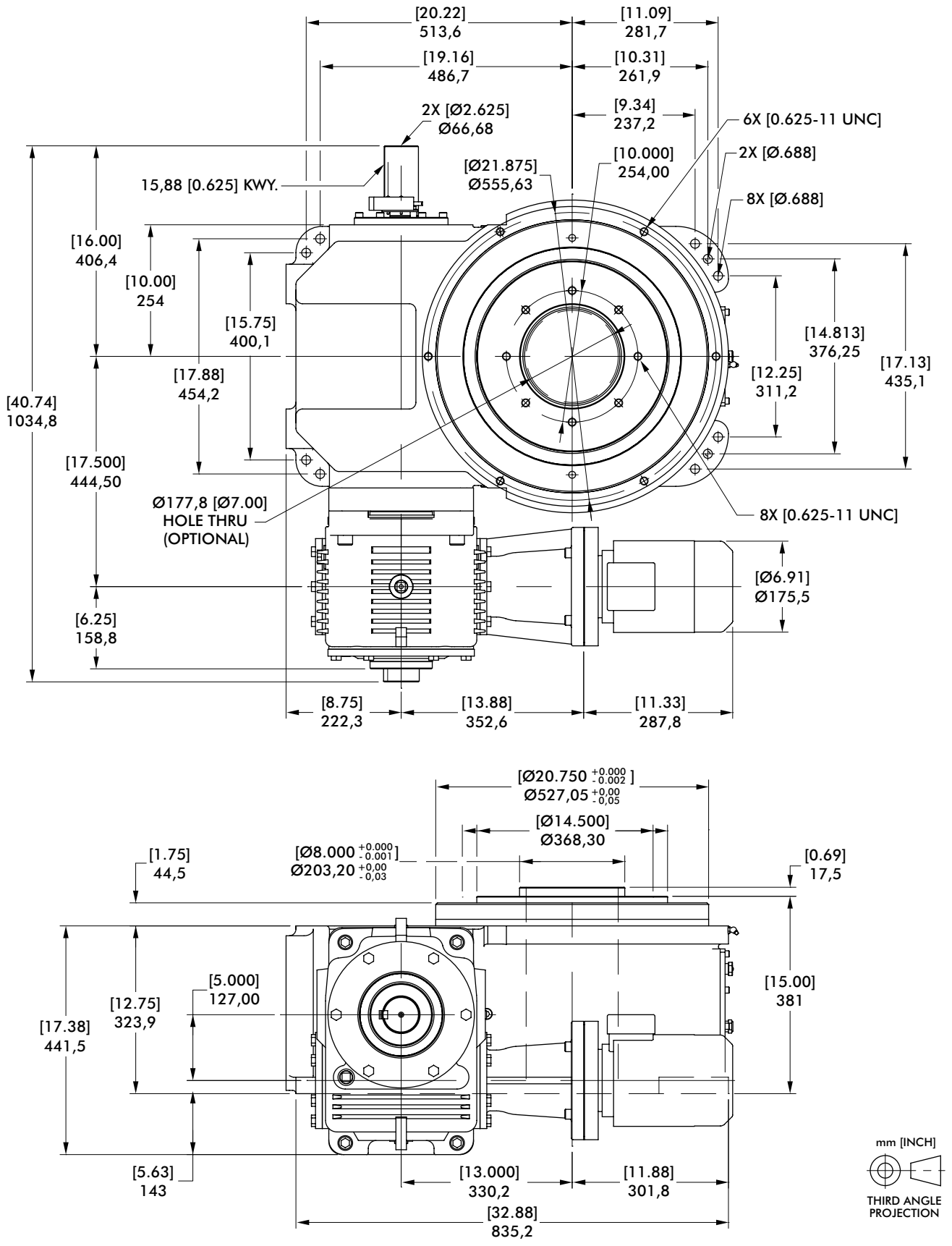

Dimensions and technical information are subject to change without notice

Maximum Inertia x 1000 kg-cm² [lb-in²] for standard package							
Stops	Motion Time [seconds]						
	0.458	0.611	0.764	0.917	1.222	1.528	1.833
2	0 [0]	15 [5]	53 [18]	114 [39]	319 [109]	670 [229]	1,206 [412]
3	6 [2]	50 [17]	129 [44]	252 [86]	673 [230]	1,393 [476]	2,487 [850]
4	26 [9]	114 [39]	269 [92]	512 [175]	1,340 [458]	2,748 [939]	4,893 [1,672]
6	79 [27]	266 [91]	600 [205]	1,121 [383]	2,894 [989]	5,914 [2,021]	10,515 [3,593]
8	158 [54]	492 [168]	1,083 [370]	2,010 [687]	5,159 [1,763]	10,529 [3,598]	18,708 [6,393]
12	372 [127]	1,121 [383]	2,455 [839]	4,542 [1,552]	11,627 [3,973]	23,710 [8,102]	42,114 [14,391]
16	679 [232]	2,010 [687]	4,384 [1,498]	8,091 [2,765]	20,690 [7,070]	42,17 [1,441]	56,933 [19,455]
Reducer Ratio							
	15	20	25	30	40	50	60

Features

- 7500C Reducer (Ratios from 15:1 to 60:1)
  - Double Extended Worm Shaft (Input)
  - Motor Adapter and Coupling
- Double Extended Camshaft (Input Shaft)
- 3 HP AC Drive Package with Inverter Duty Motor and Inverter Drive (up to 60 cpm)
- Cycle Cam and Limit Switch Mounted to Camshaft
- Right Hand Cam

Optional Accessories

- 7600C or 7700C Reducer (Ratios from 5:1 to 60:1) with Motor Adapter and Coupling
- 3 hp DC Motor
- Output Overload Clutch model 62D
  - Available Settings (in-lbs): 23,000, 36,000, 44,000, 50,000, 60,000
- Center Thru Hole (7.00 in. Diameter)
- Stationary Center Post
- Dual Cam and Limit Switch
- Left Hand Cam
- Relief in Dwell for shot-pin applications
- Custom Dial Plate

Output Load Capacity (loads carried during index):

Radial	65, 834 N [14,800 lbs]
Thrust/Axial	56,048 N [12,600 lbs]
Moment	12,089 N-m [107,000 in-lbs]

Accuracy ±27 arcsec / ±.160 mm [±.0063 in] at 1,219.2 mm [48 in] Radius

Repeatability ±7 arcsec / ±.041 mm [±.0016 in] at 1,219.2 mm [48 in] Radius

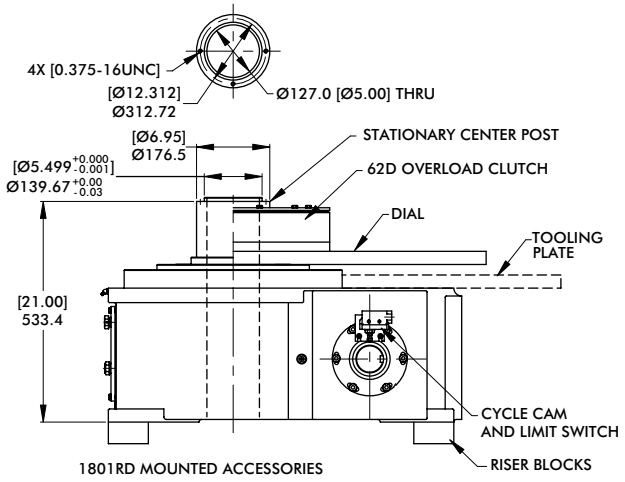

1801RD MOUNTED ACCESSORIES

Unless otherwise noted, all dimensions are in inches.

PRECISION INDEXING SOLUTIONS

Table of Contents

INDEXERS

Servo Positioners



GTB Series
Globoidal (Roller Gear)
Servo Positioner.....IN-SRV-1



RSD Series
Rotary Servo Drives.....IN-SRV-39

Mechanical Indexers



RDM Series
Rotary Index Drive IN-MCH-2



RD Series
Roller Dial Index Drive..... IN-MCH-18



E Series
Heavy-Duty Index Drive IN-MCH-30



RA Series
Right Angle Index Drive IN-MCH-42



RGD/RGS Series
Roller Gear Index Drive IN-MCH-52



P Series
Parallel Shaft/Flange Drive.... IN-MCH-72



RNG Series
Ring Drive Dial Indexer.....IN-MCH-84

OVERLOAD CLUTCHES



Overload Clutches
Output Overload..... IN-CLU-1

CUSTOM CAMS



Custom Cams
Cam Design Solutions IN-CAM-1

CONVEYORS



Rite-Link Series
Thin-Profile.....IN-CNV-1



Precision Link Series
Table-Top IN-CNV-4



Precision Link Series
Heavy-Duty IN-CNV-16

PARTS HANDLERS



LPP Series
Linear Part Handlers IN-PRT-2



RPP Series
Rotary Part Handlers IN-PRT-8

Dimensions and technical information are subject to change without notice

HEAVY DUTY INDEX DRIVE

Table of Contents



Features:

The **CAMCO E-Series Heavy Duty Index Drive** is ideal for heavy-duty rotary dial applications with features including:

Large output mounting surface supported by a 4-point contact bearing providing superior thrust and moment capacity

Large center thru-hole to acco mmodate stationary center post, electrical wiring and air or hydraulic lines

Complete motorized drive package with reducer and AC inverter drive to suit most applications

Precision cam with preloaded cam followers for maximum accuracy

Durable welded steel housing

Preloaded “center rib” design for smooth acceleration and deceleration with precision positioning

Table of Contents

How to Order 3

750E..... 5

950E..... 7

1150E..... 9

1550E..... 11

E-SERIES

Heavy Duty Index Drive | How To Order

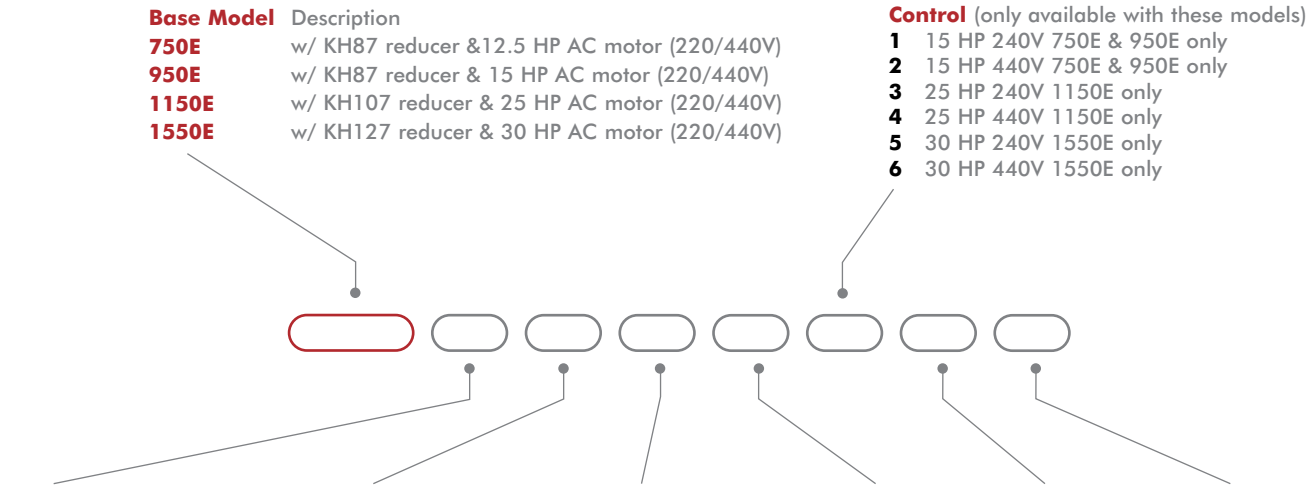

Base Model Description

750E	w/ KH87 reducer &12.5 HP AC motor (220/440V)
950E	w/ KH87 reducer & 15 HP AC motor (220/440V)
1150E	w/ KH107 reducer & 25 HP AC motor (220/440V)
1550E	w/ KH127 reducer & 30 HP AC motor (220/440V)

Control (only available with these models)

1	15 HP 240V 750E & 950E only
2	15 HP 440V 750E & 950E only
3	25 HP 240V 1150E only
4	25 HP 440V 1150E only
5	30 HP 240V 1550E only
6	30 HP 440V 1550E only

Motion

	Stops	Index Period
A	2	330
B	3	330
C	4	330
D	6	330
E	8	330
F	12	330
G	16	330

Index Mounting (See Figure 1)

1
2
3
4
5
6

Reducer Ratio

	750E 950E	1150E	1550E
A	14.50	29.00	40.19
B	19.95	42.33	54.07
C	24.92	49.90	70.95
D	31.39	52.17	81.98
E	44.02	66.52	89.89
F	49.16	73.30	110.18
G	63.00	82.61	122.98

Reducer Mounting (See Figure 3)

A

Signal Switch

M Mechanical
P Proximity

Example: MS or PS

Note about signal switch options:
a) Mechanical is a single switch with cam.
b) Proximity option is a mounting bracket for 8 or 12 mm proximity switch. A proximity switch will not be supplied. Cam supplied as target.

Signal Switch Side (See Figure 2)

S Shaft

Other Motions (stops and index periods) available. Contact your DESTACO sales representative for more information.

Input Shaft Configuration/Rotations (Figure 1)

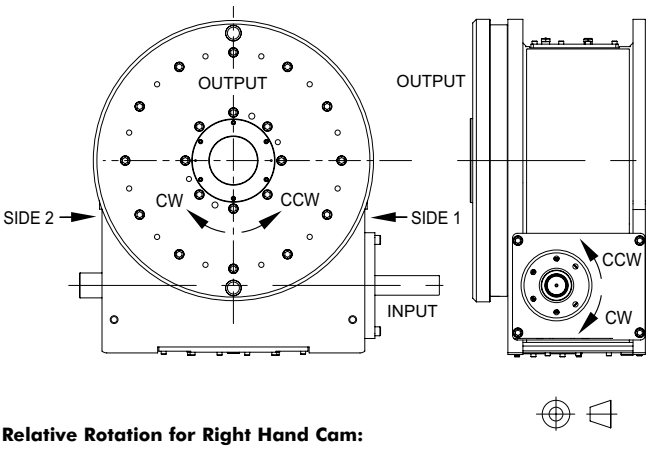

Relative Rotation for Right Hand Cam:

CW Input Side 1 CCW Output
CCW Input Side 2 CWW Output

NOTE: Input can be driven in either direction

Signal Switch Mounting Position (Figure 2)

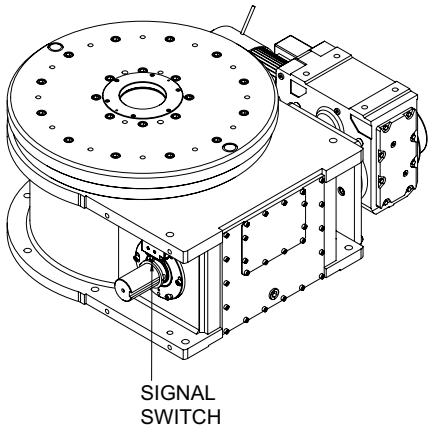

Gear Reducer Mounting Position (Figure 3)

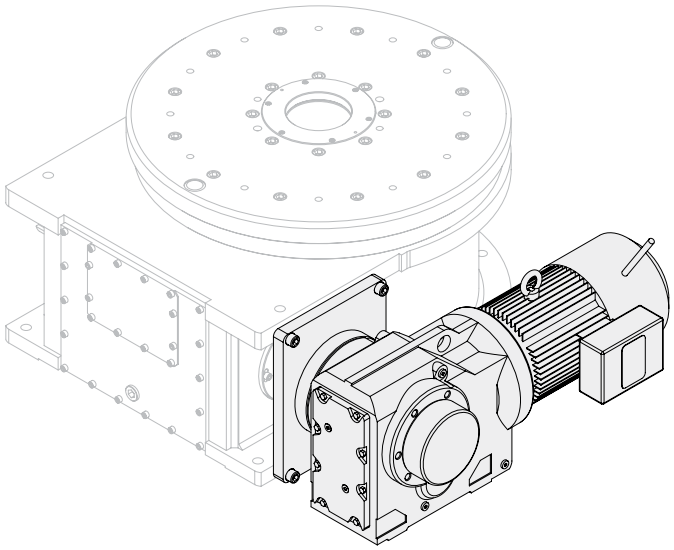

750E SERIES

Heavy Duty Index Drive | Dimensions

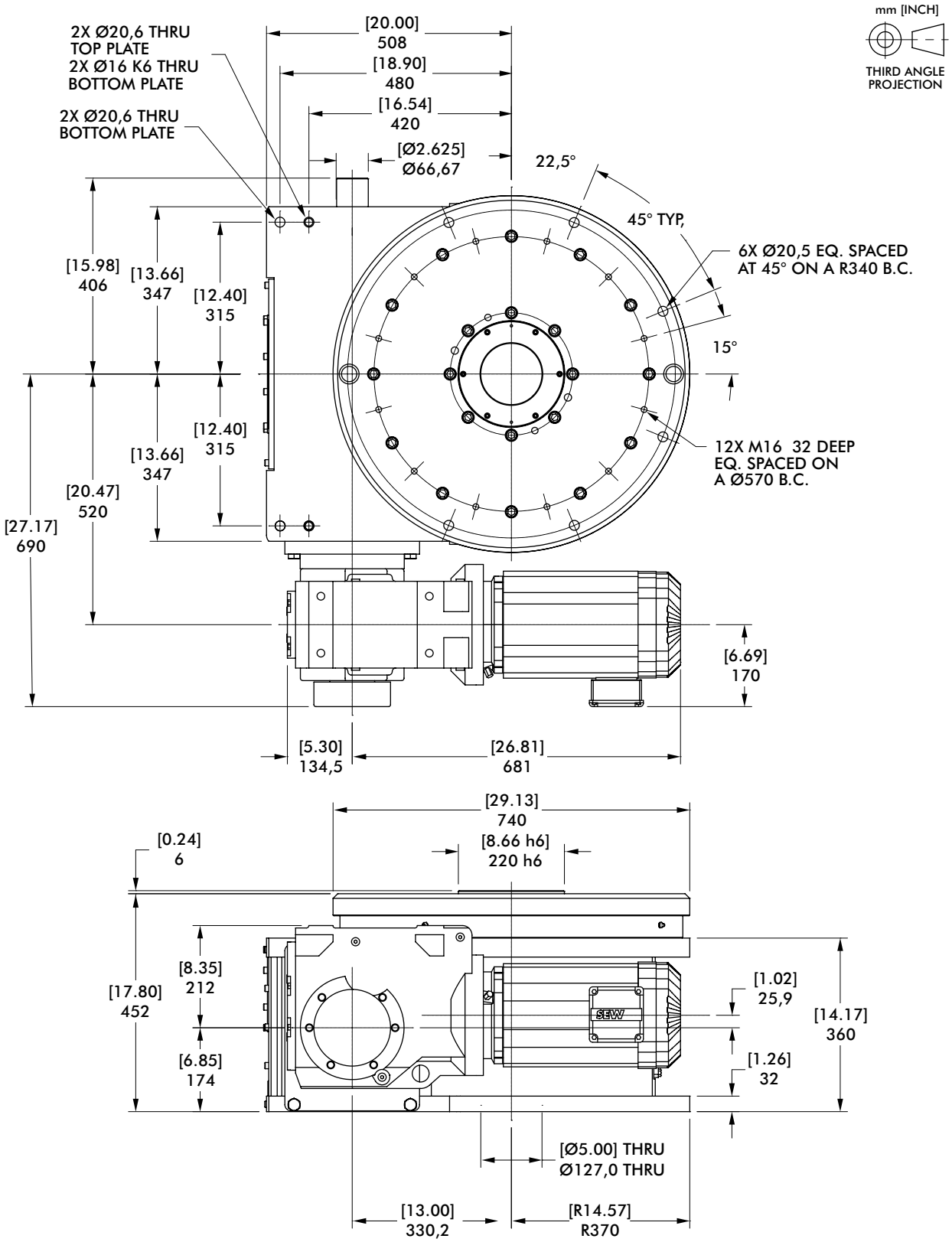

Dimensions and technical information are subject to change without notice

Maximum Inertia x 1000 [lb-in²] kg-cm² for standard package							
Stops	Motion Time [seconds]						
	0.44	0.59	0.76	0.96	1.35	1.50	1.93
2	[0] 0	[27] 79	[105] 307	[254] 743	[751] 2198	[987] 2888	[1647] 4820
3	[14] 41	[98] 287	[257] 752	[562] 1645	[1577] 4615	[2058] 6023	[3407] 9970
4	[67] 196	[231] 676	[542] 1586	[1140] 3336	[3128] 9154	[4072] 11916	[6714] 19648
6	[191] 559	[542] 1586	[1209] 3538	[2491] 7290	[6756] 19771	[8781] 25697	[14447] 42278
8	[372] 1089	[931] 2724	[1677] 4908	[2841] 8314	[5587] 16350	[6968] 20391	[11444] 33490
12	[886] 2593	[2291] 6704	[4840] 14164	[8195] 23982	[16116] 47162	[20100] 58821	[33010] 96600
16	[1351] 3954	[2717] 7951	[4837] 14155	[8254] 24154	[16263] 47592	[20283] 59356	[33311] 97481
	Reducer Ratio						
	14.45	19.45	24.92	31.39	44.02	49.16	63.00

Features

- KH87 Gear Reducer with Brake-motor
- Double Extended Camshaft (Input shaft)
- Center Thru Hole (Ø127 mm [Ø5 in])
- Cycle Cam and Limit Switch
- Right Hand Cam

Optional Accessories

- Left Hand Cam
- Relief in Dwell for Shot-Pin applications
- Dual Cam & limit Switch
- KH97 Gear Reducer with Brake-motor
- Stationary Center Post
- Visual Disk Dwell Indicator

Output Load Capacity (loads carried during index):

Radial	129888 N [29200 lbs]
Thrust/Axial	186825 N [42000 lbs]
Moment	46830 N-m [414500 in-lbs]

Typical Application Dial Diameter: 1397 mm to 2794 mm [55 in to 110 in]

Accuracy ±27 arcsec / ±.0,05 mm [±.002 in] at 381 mm [15in] Radius

Repeatability ±7 arcsec / ±.0,013 mm [±.0005 in] at 381 mm [15in] Radius

950E SERIES

Heavy Duty Index Drive | Dimensions

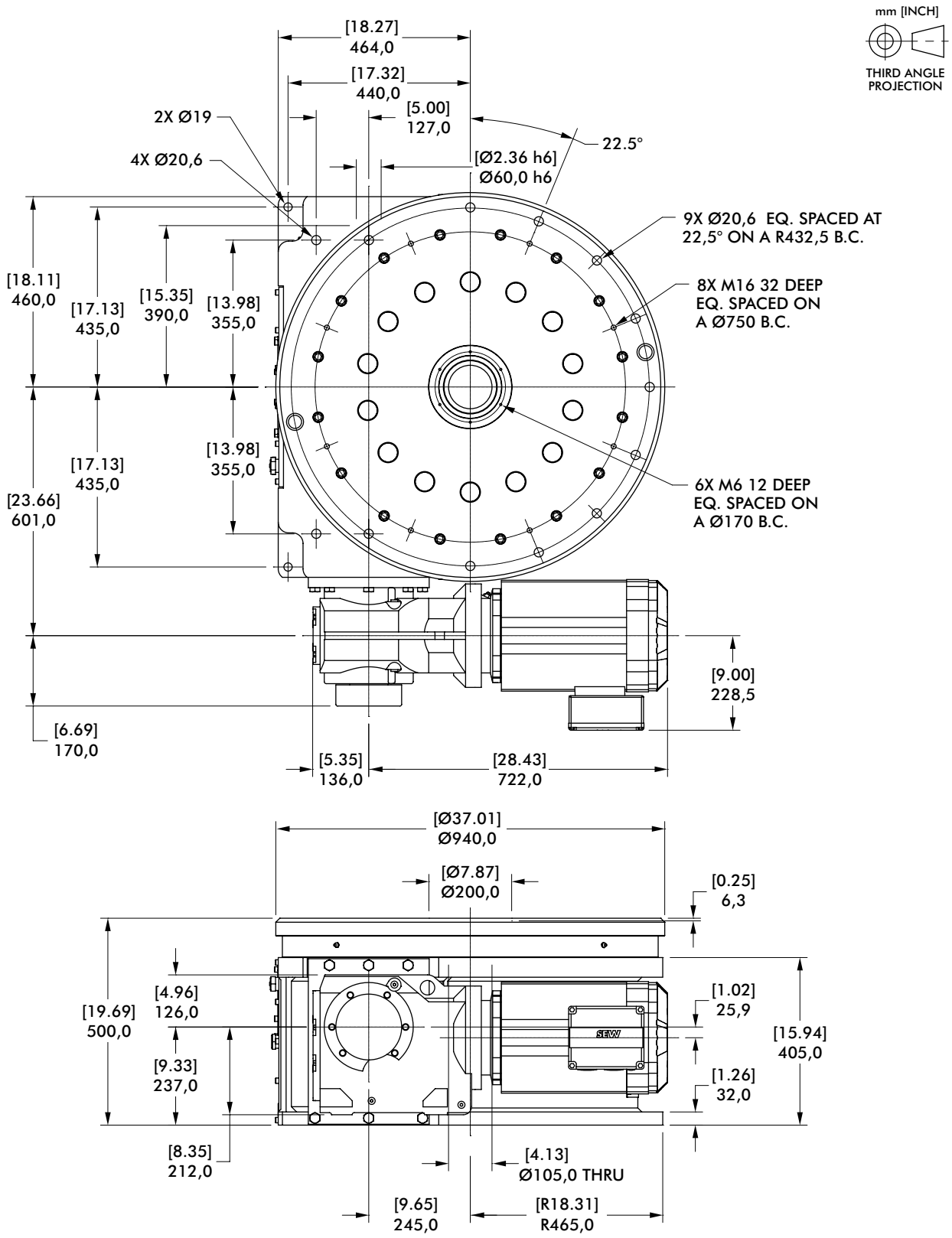

Dimensions and technical information are subject to change without notice

Maximum Inertia x 1000 [lb-in²] kg-cm² for standard package							
Stops	Motion Time [seconds]						
	0.44	0.59	0.76	0.96	1.35	1.50	1.93
2	[0] 0	[0] 0	[61] 179	[224] 656	[619] 1811	[833] 2438	[1433] 4194
3	[0] 0	[59] 173	[250] 732	[619] 1811	[1507] 4410	[1989] 5821	[3337] 9765
4	[16] 47	[205] 600	[564] 1650	[1252] 3664	[2911] 8519	[3810] 11150	[6329] 18521
6	[187] 547	[634] 1855	[1479] 4328	[3102] 9078	[7013] 20523	[9135] 26733	[15073] 44110
8	[412] 1206	[1169] 3421	[2603] 7617	[5287] 15472	[11478] 33589	[14315] 41891	[23511] 68803
12	[1025] 3000	[2729] 7986	[5956] 17430	[10793] 31585	[23621] 69124	[30484] 89208	[53172] 155602
16	[1290] 3775	[2647] 7746	[4753] 13909	[8147] 23841	[17305] 50641	[21582] 63157	[35445] 103726
Reducer Ratio							
	14.45	19.45	24.92	31.39	44.02	49.16	63.00

Features

- KH87 Gear Reducer with Brake-motor
- Double Extended Camshaft (Input shaft)
- Center Thru Hole (Ø105 mm [Ø4.13 in])
- Cycle Cam and Limit Switch
- Right Hand Cam

Optional Accessories

- Left Hand Cam
- Relief in Dwell for Shot-Pin applications
- Dual Cam & limit Switch
- KH97 Gear Reducer with Brake-motor
- Stationary Center Post
- Visual Disk Dwell Indicator

Output Load Capacity (loads carried during index):

Radial	233976 N [52600 lbs]
Thrust/Axial	337397 N [75850 lbs]
Moment	110438 N-m [977500 in-lbs]

Typical Application Dial Diameter: 1778 mm to 3556 mm [70 in to 140 in]

Accuracy ±29 arcsec / ±0,058 mm [±.0023 in] at 762 mm [30in] Radius

Repeatability ±6 arcsec / ±.0,015 mm [±.0006 in] at 762 mm [30in] Radius

1150E SERIES

Heavy Duty Index Drive | Dimensions

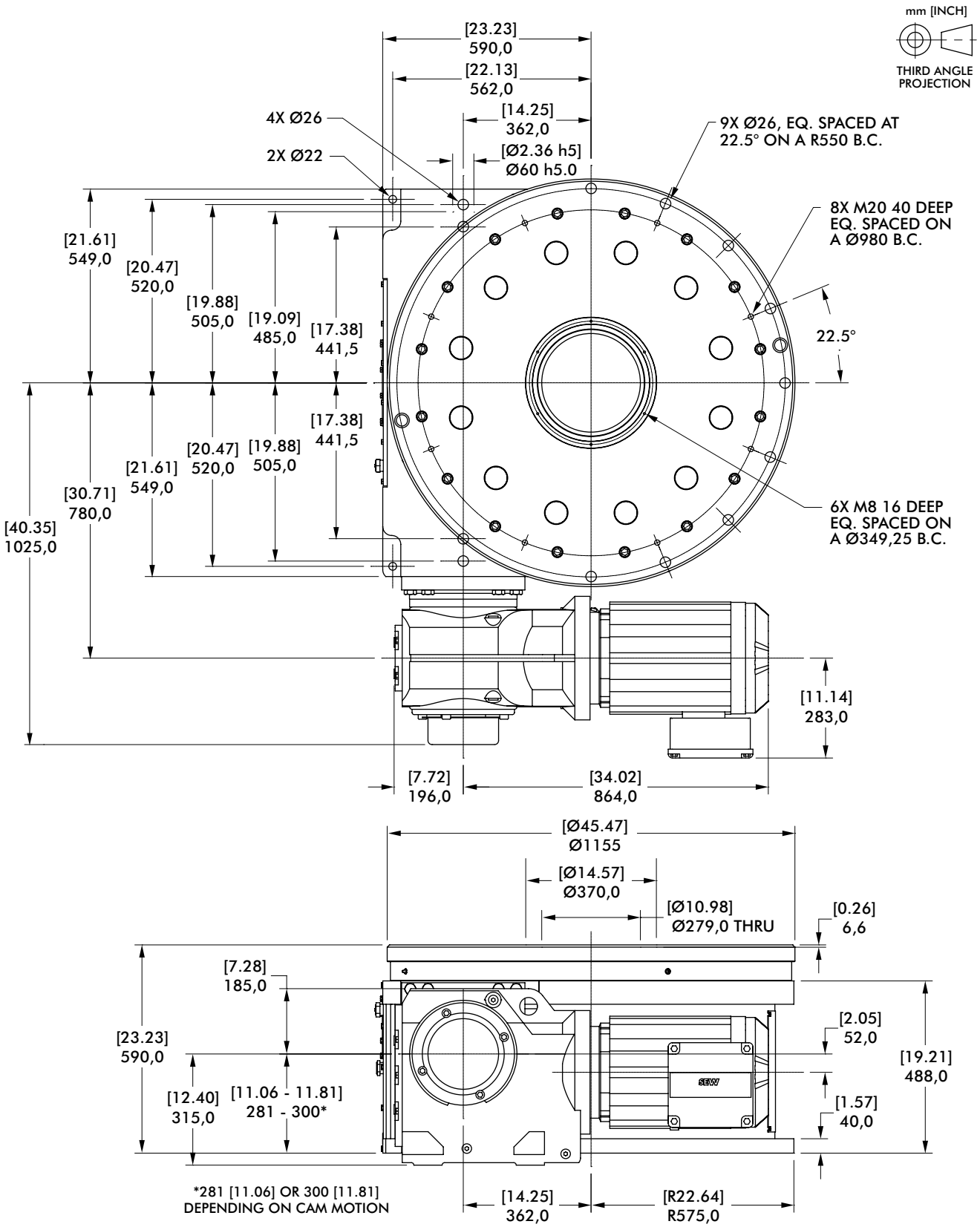

Dimensions and technical information are subject to change without notice

Maximum Inertia x 1000 kg-cm² [lb-in²] for standard package							
Stops	Motion Time [seconds]						
	0.89	1.29	1.52	1.75	2.03	2.24	2.52
2	[134] 392	[1141] 3339	[2093] 6125	[3329] 9742	[4746] 13889	[5835] 17076	[7501] 21951
3	[698] 2043	[2965] 8677	[5108] 14948	[7887] 23080	[11077] 32416	[13526] 39582	[17275] 50554
4	[1445] 4229	[5474] 16019	[9284] 27169	[14225] 41628	[19896] 58224	[24249] 70962	[30915] 90470
6	[3780] 11062	[12845] 37590	[21419] 62680	[32537] 95216	[45296] 132554	[55090] 161215	[70088] 205105
8	[6581] 19259	[21959] 64261	[36502] 106819	[54381] 159140	[73624] 215453	[89397] 261611	[113548] 332286
12	[15621] 45713	[50221] 146967	[82944] 242727	[123772] 362206	[167569] 490373	[203468] 595428	[258436] 756286
16	[27975] 81866	[61083] 178753	[84884] 248404	[111420] 326059	[150846] 441435	[183162] 536005	[232645] 680812
	Reducer Ratio						
	29.00	42.33	49.90	57.17	66.52	73.30	82.61

Features

- KH107 Gear Reducer with Brake-motor
- Double Extended Camshaft (Input shaft)
- Center Thru Hole (Ø278 mm [Ø10.94 in])
- Cycle Cam & limit Switch
- Right Hand Cam

Optional Accessories

- Left Hand Cam
- Relief in Dwell for Shot-Pin applications
- Dual Cam & limit Switch
- KH127 Gear Reducer with Brake-motor
- Stationary Center Post
- Visual Disk Dwell Indicator

Output Load Capacity (loads carried during index):

Radial	262556 N [59025 lbs]
Thrust/Axial	380189 N [85470 lbs]
Moment	165968 N-m [1469000 in-lbs]

Typical Application Dial Diameter: 2286 mm to 4572 mm [90 in to 180 in]

Accuracy ±16 arcsec / ±0,05 mm [±.002 in] at 635 mm [25in] Radius

Repeatability ±4 arcsec / ±0,013 mm [±.0005 in] at 635 mm [25in] Radius

1550E SERIES

Heavy Duty Index Drive | Dimensions

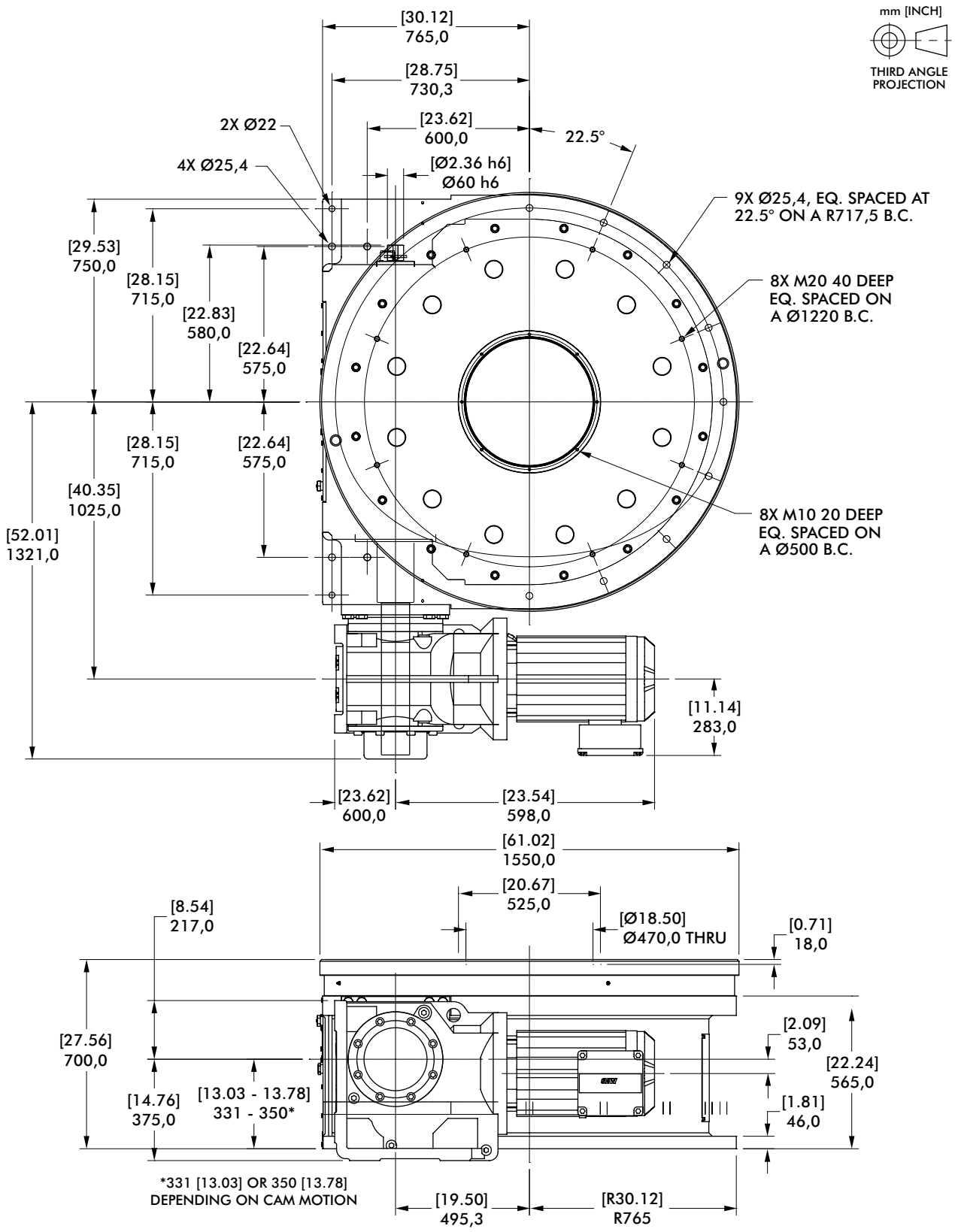

Dimensions and technical information are subject to change without notice

Maximum Inertia x 1000 kg-cm² [lb-in²] for standard package							
Stops	Motion Time [seconds]						
	1.23	1.65	2.17	2.50	2.75	3.37	3.74
2	[0] 0	[1926] 5636	[6208] 18167	[10388] 30399	[13740] 40209	[21944] 64217	[26735] 78237
3	[1811] 5300	[6814] 19940	[17561] 51390	[28054] 82097	[36466] 106714	[57057] 166971	[69084] 202167
4	[4396] 12864	[13172] 38546	[32028] 93727	[50439] 147605	[65198] 190795	[101324] 296514	[122426] 358267
6	[11290] 33039	[30132] 88178	[70615] 206647	[110143] 322322	[141829] 415048	[219391] 642025	[264696] 774605
8	[22185] 64922	[57289] 167650	[132712] 388368	[195668] 572602	[235249] 688432	1034294 [353436]	[436753] 1278112
12	146334 [50005]	366888 [125372]	[287302] 840760	1303461 [445415]	1674364 [572159]	2582270 [882406]	3038949 [1038461]
16	263112 [89910]	603493 [206224]	1039120 [355085]	1387320 [474071]	1667952 [569968]	2505914 [856314]	3038949 [1038461]
Reducer Ratio							
	40.19	54.07	70.95	81.98	89.89	110.18	122.48

Features

- KH127 Gear Reducer with Brake-motor
- Double Extended Camshaft (Input shaft)
- Center Thru Hole (Ø470 mm [Ø18.50 in])
- Cycle Cam and Limit Switch
- Right Hand Cam

Optional Accessories

- Left Hand Cam
- Relief in Dwell for Shot-Pin applications
- Dual Cam & limit Switch
- KH157 Gear Reducer with Brake-motor
- Stationary Center Post
- Visual Disk Dwell Indicator

Output Load Capacity (loads carried during index):

Radial	367423 N [82600 lbs]
Thrust/Axial	533786 N [120000 lbs]
Moment	328094 N-m [2904000 in-lbs]

Typical Application Dial Diameter: 2997 mm to 5994 mm [118 in to 236 in]

Accuracy ±12 arcsec / ±0,043 mm [±.0017 in] at 762 mm [30in] Radius

Repeatability ±3 arcsec / ±0,010 mm [±.0004 in] at 762 mm [30in] Radius

PRECISION INDEXING SOLUTIONS

Table of Contents

INDEXERS

Servo Positioners



GTB Series
Globoidal (Roller Gear)
Servo Positioner.....IN-SRV-1



RSD Series
Rotary Servo Drives.....IN-SRV-39

Mechanical Indexers



RDM Series
Rotary Index Drive IN-MCH-2



RD Series
Roller Dial Index Drive..... IN-MCH-18



E Series
Heavy-Duty Index Drive IN-MCH-30



RA Series
Right Angle Index Drive IN-MCH-42



RGD/RGS Series
Roller Gear Index Drive IN-MCH-52



P Series
Parallel Shaft/Flange Drive.... IN-MCH-72



RNG Series
Ring Drive Dial Indexer.....IN-MCH-84

OVERLOAD CLUTCHES



Overload Clutches
Output Overload..... IN-CLU-1

CUSTOM CAMS



Custom Cams
Cam Design Solutions IN-CAM-1

CONVEYORS



Rite-Link Series
Thin-Profile.....IN-CNV-1



Precision Link Series
Table-Top IN-CNV-4



Precision Link Series
Heavy-Duty IN-CNV-16

PARTS HANDLERS



LPP Series
Linear Part Handlers IN-PRT-2



RPP Series
Rotary Part Handlers IN-PRT-8

Dimensions and technical information are subject to change without notice

RIGHT ANGLE INDEX DRIVES



Features:

CAMCO Right Angle Index Drives are ideal for dial applications or actuation-type applications such as driving a linkage or in-line conveyor.

Fixed center distance between input and output

Hardened, ground barrel cam

Compact design requiring minimum use of floor space.

Preloaded "rib-centered" design with modified-sine motion provides smooth acceleration and deceleration with precision positioning.

Universal mounting available on RA models.

Table of Contents

How to Order 3

400RA 5

512RA 7

662RA 9

RA SERIES

Right Angle Index Drive | How to Order

Indexer Ordering Procedure

1. Model
2. Input Shaft Configuration
   - Side 1
   - Side 2
   - Double Input – DI (Standard)
4. Indexer Mounting Position: 1-6
5. Indexer Housing Mounting Holes: Side 1-6 (more than one side can be selected)

Reducer Ordering Procedure

1. Model
2. Ratio: 5:1, 10:1, 15:1, 20:1, 25:1, 30:1, 40:1, 50:1, 60:1
3. Motor Adapter
4. Reducer Input Shaft Extension: Single Input (SE) or Double Input (DE)
5. Mounting (see diagram below)

Input Shaft Configuration (Top View)

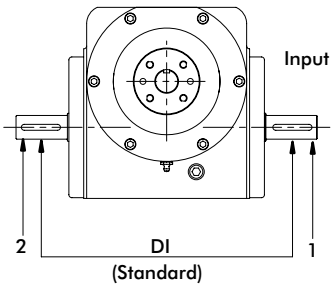

Relative Rotation for Right Hand Cam:

CW Input Side 1 CCW Output
CCW Input Side 2 CCW Output

NOTE: Input can be driven in either direction

Input Shaft Rotation

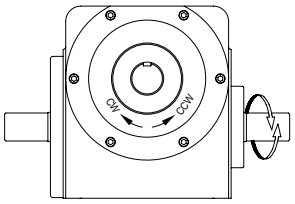

Dimensions and technical information are subject to change without notice

RA SERIES

Right Angle Index Drive | Indexer Mounting Position

OVOI (output vertical, over input)	OVUI (output vertical, under input)	OHOI (output horizontal, over input)	OHUI (output horizontal, under input)	H-S1-UP (output horizontal, side 1 up)	H-S2-UP (output horizontal, side 2 up)
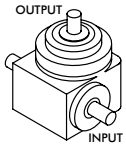 1	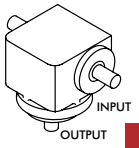 2	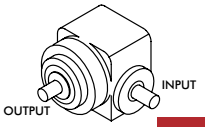 3	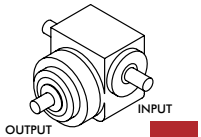 4	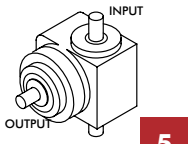 5	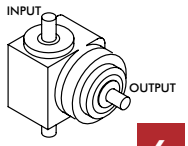 6

Gear Reducer Mounting Positions

	Mounting "A"		Mounting "B"	
	RH	LH	RH	LH
SIDE 1	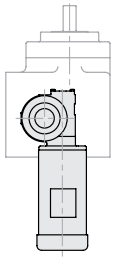 A	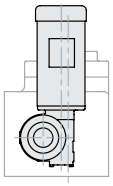 B	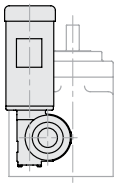 C	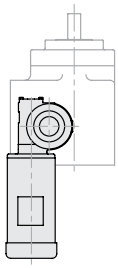 D
SIDE 2	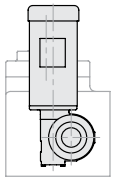 E	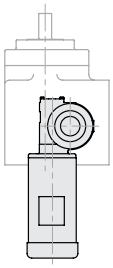 F	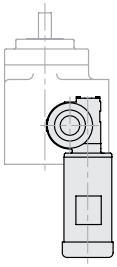 G	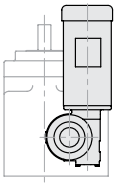 H

	Mounting "C"		Mounting "D"	
	RH	LH	RH	LH
SIDE 1	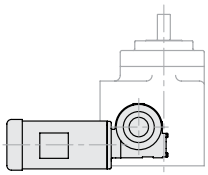 J	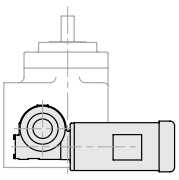 K	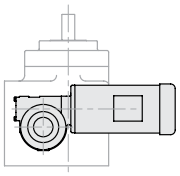 L	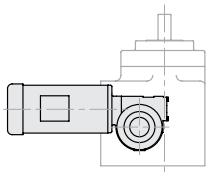 M
SIDE 2	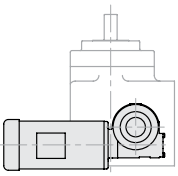 N	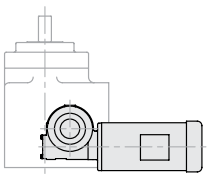 P	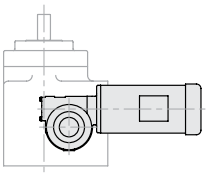 R	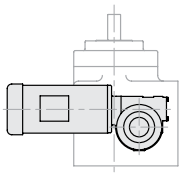 S

400RA SERIES

Right Angle Index Drive | Dimensions

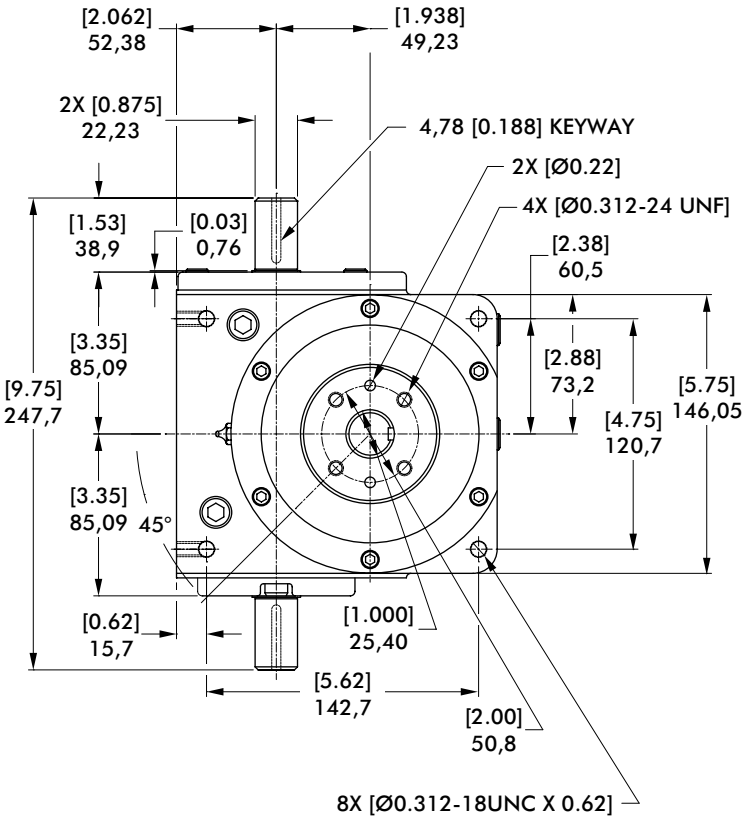

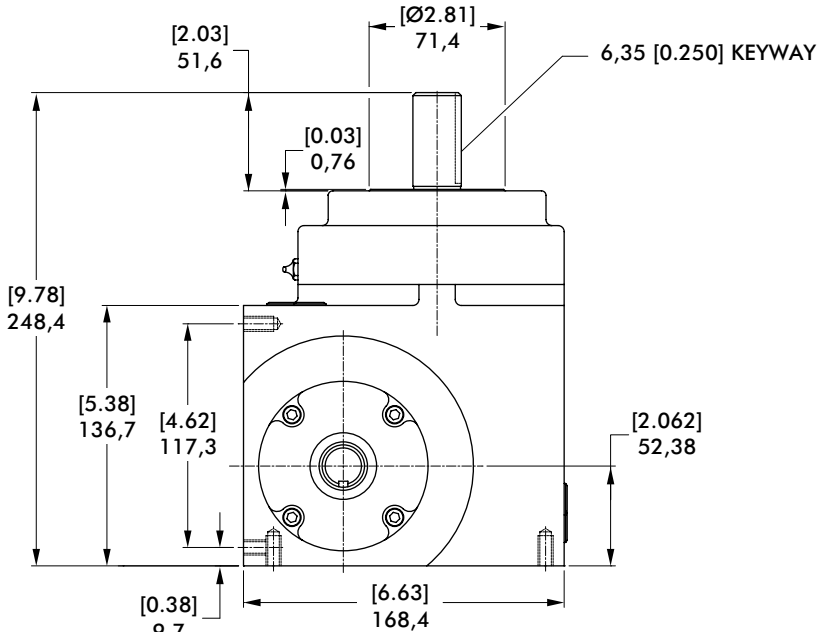

mm [INCH]

THIRD ANGLE PROJECTION

Dimensions and technical information are subject to change without notice

400RA Indexer Capacities					
Stops	**Index Period**	**Motion**	**B_{10} Capacity at 50 RPM N-m [in-lb]**	**Internal Inertia kg-cm² [lb-in²]**	**Model**
2	330	ms	67 [595]	44 [15]	400RA2H20-330
3	270	ms	180 [1591]	44 [15]	400RA3H24-270
4	270	ms	210 [1858]	44 [15]	400RA4H24-270
	180	ms	237 [2098]	44 [15]	400RA4H24-180
6	270	ms	193 [1711]	44 [15]	400RA6H24-270
	120	ms	229 [2024]	44 [15]	400RA6H24-120
8	270	ms	224 [1987]	44 [15]	400RA8H24-270
	120	ms	266 [2354]	44 [15]	400RA8H24-120
12	270	ms	146 [1290]	44 [15]	400RA12H20-270
	120	ms	177 [1568]	44 [15]	400RA12H20-120
16	270	ms	161 [1426]	44 [15]	400RA16H20-270 II
	180	ms	333 [2947]	44 [15]	400RA16H24-180 II
24	270	ms	185 [1640]	44 [15]	400RA24H20-270 II
	180	ms	214 [1894]	44 [15]	400RA24H20-180 II

Other Motions (stops and index periods) available. Contact your DESTACO sales representative for more information.

Features

- R180 Reducer (ratios from 15:1 to 60:1)
  - Double Extended Worm Shaft (Input)
  - Worm Shaft Handwheel
- Double Extended Camshaft (Input Shaft)
- 1/3 HP AC Drive Package with Inverter Duty Motor and IM-pAC AC Drive (up to 60 cpm)
- Cycle Cam and Limit Switch Mounted to Camshaft
- Right Hand Cam

Optional Accessories

- 1/3 hp DC motor
- R225 Reducer (ratios from 10:1 to 60:1)
  - 1 hp DC Motor
  - 56C Motor Adapter and Coupling
- Varipak DC Motor Control (up to 30 cpm)
- Output Overload Clutch Models: 2.3F, 2.3FC, 2.3S, 2.3C, 2.3FC-SD, 2.3S-SD, 2.3C-SD
  - Available Settings (in-lb): 400, 600, 700, 850, 1000, 1300, 1800, 2000, 2300
- Dual Cycle Cam and Limit Switch
- Finished cover for ceiling mount or tooling plate mounting
- Left Hand Cam
- Relief in Dwell for shot-pin applications

Output Load Capacity (loads carried during index):

Radial	3603 N [810 lbs]
Thrust/Axial	6254 N [1406 lbs]
Moment	183 N-m [1620 in-lb]

Accuracy ±48 arcsec / ±0,178 mm [±.0007 in] at 76,2 [3 in] Radius

Repeatability ±12 arcsec / ± 0,051 mm [±.0002 in] at 76,2 [3 in] Radius

512RA SERIES

Right Angle Index Drive | Dimensions

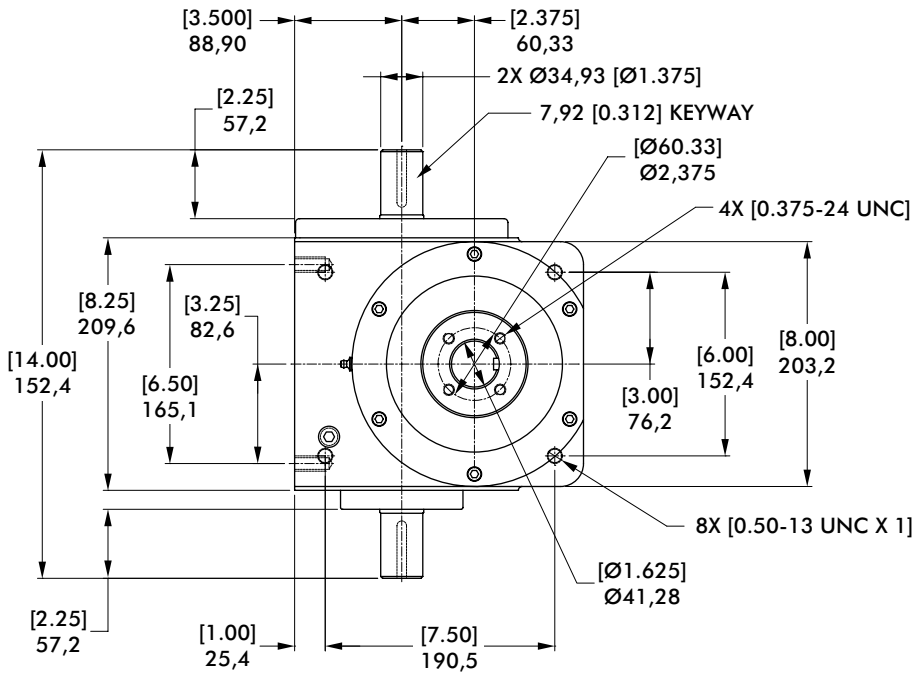

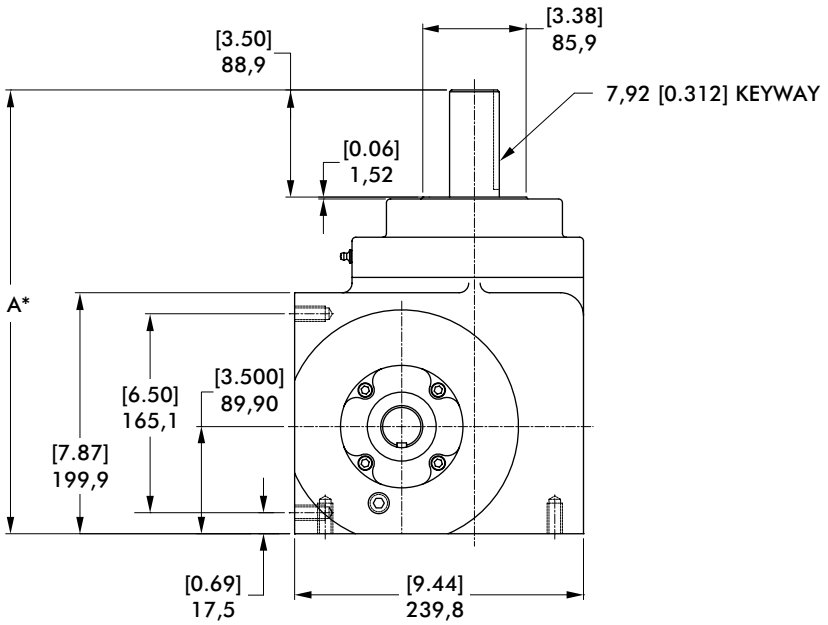

*See table on top of page 8 for dimensions

mm [INCH]

THIRD ANGLE PROJECTION

Dimensions and technical information are subject to change without notice

512RA Indexer Capacities						
Stops	Index Period	Motion	B_{10} Capacity at 50 RPM N-m [in-lb]	Internal Inertia kg-cm² [lb-in²]	Model	A
2	270	msc.33	233 [2061]	132 [45]	512RA2H32-270 MSC.33	379,2 [14.93]
3	270	ms	267 [2360]	132 [45]	512RA3H32-270	368,3 [14.50]
	180	msc.33	322 [2852]	132 [45]	512RA3H32-180 MSC 0.33	379,2 [14.93]
4	270	ms	306 [2710]	132 [45]	512RA4H32-270	368,3 [14.50]
	120	msc.33	412 [3648]	132 [45]	512RA4H32-120 MSC 0.33	379,2 [14.93]
6	270	ms	295 [2613]	132 [45]	512RA6H32-270	368,3 [14.50]
	120	ms	359 [3179]	132 [45]	512RA6H32-120	368,3 [14.50]
8	270	ms	358 [3172]	132 [45]	512RA8H32-270	368,3 [14.50]
	120	ms	430 [3802]	132 [45]	512RA8H32-120	368,3 [14.50]
12	270	ms	309 [2738]	132 [45]	512RA12H28-270	368,3 [14.50]
	120	ms	359 [3176]	132 [45]	512RA12H28-120	379,2 [14.93]

Other Motions (stops and index periods) available. Contact your DESTACO sales representative for more information.

Features

- R225 Reducer (ratios from 10:1 to 60:1)
  - 56C Motor Adapter and Coupling
- Double Extended Camshaft (Input Shaft)
- 1 HP AC Drive Package with Inverter Duty Motor and Inverter Drive (up to 60 cpm)
- Cycle Cam and Limit Switch Mounted to Camshaft
- Right Hand Cam

Optional Accessories

- 1 hp DC motor
- Varipak DC Motor Control (up to 30 cpm)
- Output Overload Clutch Models: 6.0F, 6.0FC, 6.0S and 6.0C, 6.0C-SD, 6.0FC-SD, 6.0S-SD
  - Available Settings (in-lb): 670, 825, 1100, 1400, 1700, 2000, 2300, 2500, 3000, 3800, 4000, 5000, 6000
- Dual Cycle Cam and Limit Switch
- Finished cover for ceiling mount or tooling plate mounting
- Left Hand Cam
- Relief in Dwell for shot-pin applications

Output Load Capacity (loads carried during index):

Radial	8834 N [1,986 lbs]
Thrust/Axial	10129 N [2,277 lbs]
Moment	785 N-m [6,951 in-lb]

Accuracy ±37 arcsec / ±0,028 mm [±.0011 in] at 152,4 [6 in] Radius

Repeatability ±9 arcsec / ± 0,008 mm [±.0003 in] at 152,4 [6 in] Radius

662RA SERIES

Right Angle Index Drive | Dimensions

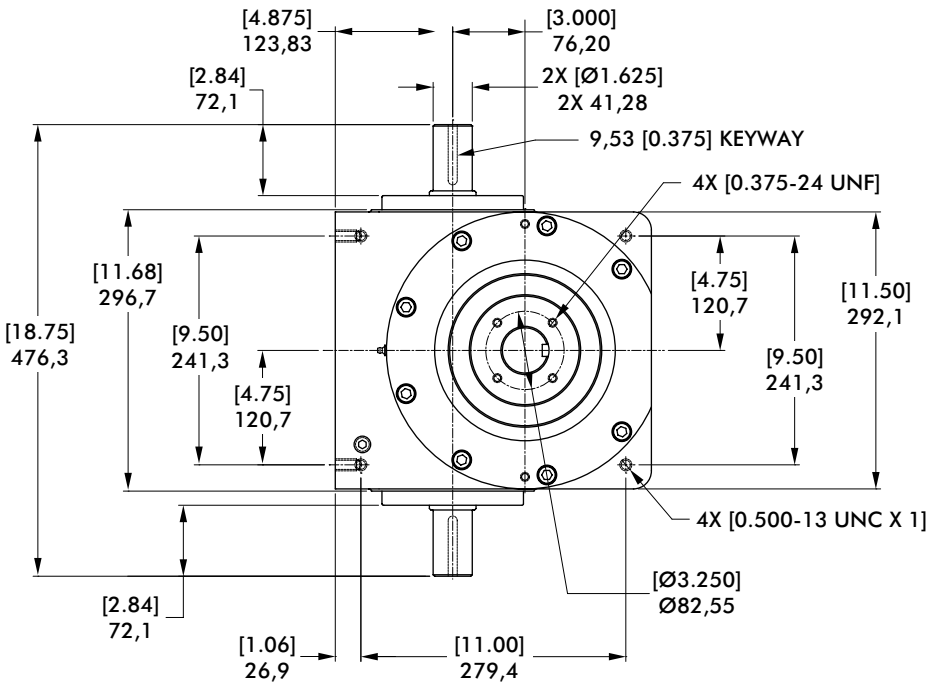

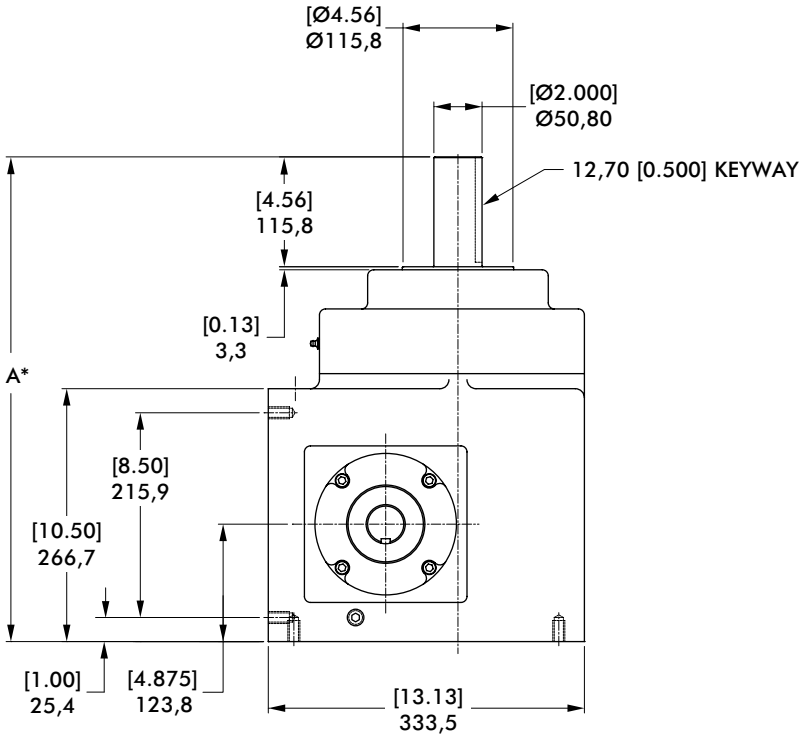

*See table on top of page 8 for dimensions

mm [INCH]

THIRD ANGLE PROJECTION

512RA Indexer Capacities						
Stops	Index Period	Motion	B_{10} Capacity at 50 RPM N-m [in-lb]	Internal Inertia kg-cm² [lb-in²]	Model	A
2	270	msc.33	738 [6534]	503 [172]	512RA2H32-270 MSC.33	379,2 [14.93]
3	270	ms	668 [5913]	495 [169]	512RA3H32-270	368,3 [14.50]
	180	msc.33	694 [6146]	495 [169]	512RA3H32-180 MSC 0.33	379,2 [14.93]
4	270	ms	780 [6903]	503 [172]	512RA4H32-270	368,3 [14.50]
	120	msc.33	876 [7751]	503 [172]	512RA4H32-120 MSC 0.33	379,2 [14.93]
6	270	ms	648 [5734]	495 [169]	512RA6H32-270	368,3 [14.50]
	120	ms	853 [7551]	495 [169]	512RA6H32-120	368,3 [14.50]
8	270	ms	812 [7187]	503 [172]	512RA8H32-270	368,3 [14.50]
	120	ms	1015 [8987]	503 [172]	512RA8H32-120	368,3 [14.50]
12	270	ms	509 [4504]	483 [165]	512RA12H28-270	368,3 [14.50]
	120	ms	625 [5536]	483 [165]	512RA12H28-120	379,2 [14.93]

Other Motions (stops and index periods) available. Contact your DESTACO sales representative for more information.

Features

- 7300C Reducer (ratios from 5:1 to 60:1)
  – Motor Adapter and Coupling
- Double Extended Camshaft (Input Shaft)
- 1 or 2 HP AC Drive Package with Inverter Duty Motor and Inverter Drive (up to 60 cpm)
- Varipak DC Motor Control (up to 30 cpm)
- Cycle Cam and Limit Switch Mounted to Camshaft
- Right Hand Cam

Optional Accessories

- 1 hp DC motor
- 7350C Reducer (ratios from 5:1 to 60:1)
  – Motor Adapter and Coupling
- 2 hp DC Motor with Varipak DC Motor Control (up to 30 cpm)
- Output Overload Clutch Models: 11F, 11FC, 11FC-SD
  – Available Settings (in-lb): 2300, 4000, 6000, 8500, 11,000
- Dual Cycle Cam and Limit Switch
- Finished cover for ceiling mount or tooling plate mounting
- Left Hand Cam
- Relief in Dwell for shot-pin applications

Output Load Capacity (loads carried during index):

Radial	12642 N [2842 lbs]
Thrust/Axial	23304 N [5239 lbs]
Moment	334 N-m [2959 in-lb]

Accuracy ±36 arcsec / ±0,025 mm [±.001 in] at 152,4 [6 in] Radius

Repeatability ±9 arcsec / ± 0,008 mm [±.0003 in] at 152,4 [6 in] Radius

PRECISION INDEXING SOLUTIONS

Table of Contents

INDEXERS

Servo Positioners



GTB Series
Globoidal (Roller Gear)
Servo Positioner.....IN-SRV-1



RSD Series
Rotary Servo Drives.....IN-SRV-39

Mechanical Indexers



RDM Series
Rotary Index Drive IN-MCH-2



RD Series
Roller Dial Index Drive..... IN-MCH-18



E Series
Heavy-Duty Index Drive IN-MCH-30



RA Series
Right Angle Index Drive IN-MCH-42



RGD/RGS Series
Roller Gear Index Drive IN-MCH-52



P Series
Parallel Shaft/Flange Drive.... IN-MCH-72



RNG Series
Ring Drive Dial Indexer.....IN-MCH-84

OVERLOAD CLUTCHES



Overload Clutches
Output Overload..... IN-CLU-1

CUSTOM CAMS



Custom Cams
Cam Design Solutions IN-CAM-1

CONVEYORS



Rite-Link Series
Thin-Profile.....IN-CNV-1



Precision Link Series
Table-Top IN-CNV-4



Precision Link Series
Heavy-Duty IN-CNV-16

PARTS HANDLERS



LPP Series
Linear Part Handlers IN-PRT-2



RPP Series
Rotary Part Handlers IN-PRT-8

Dimensions and technical information are subject to change without notice

ROLLER GEAR INDEX DRIVE



Features:

The **CAMCO Roller Gear Index Drives** are robust, versatile units suitable for a wide variety of applications.

Available with a flange (RGD) or shaft (RGS) output

All six surfaces are machined for universal mounting

Optional center thru-hole in flange version facilitates passage of electrical wiring, pneumatic lines or mechanical linkages

Short camshaft motion periods, due to oversized cam design, are well suited for continuous running applications or for special motion requirements such as oscillating motions

Table of Contents

How to Order 3
40RGD/40RGS 5
50RGD/50RGS 7
70RGD/70RGS 9
80RGD/80RGS 11
110RGD/110RGS 13
350RGD/350RGS 15
500RGD/500RGS 17
600RGD/600RGS 19

RGD/RGS SERIES

Roller Gear Index Drive | How To Order

Indexer Ordering Procedure

1. Model
2. Input Shaft Configuration
   - Side 1
   - Side 2
   - Double Input – DI (Standard)
3. Cam Lead (Helix)
   - Right Hand (Standard)
   - Left Hand

NOTE: Input may rotate in either direction to achieve desired direction of output rotation.

4. Indexer Mounting Position: 1-6
5. Indexer Housing Mounting Holes: Side 1-6 (more than one side can be selected)

Reducer Ordering Procedure

1. Model
2. Ratio
   - 10:1, 15:1, 20:1, 25:1, 30:1, 40:1, 50:1, 60:1
3. Motor Adapter
4. Reducer Input Shaft Extension
   - Single Input (SE) or Double Input (DE)
5. Mounting
   - Mounting Position A, B, C, or D
   - Mounted on Indexer Side 1 or Side 2
6. Input Shaft Orientation
   - Left or Right (See Diagram Below)

Input Shaft Configuration (Top View)

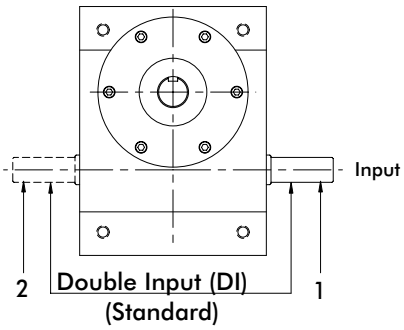

Input Shaft Rotation

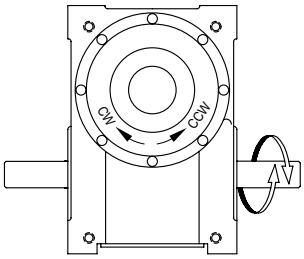

Relative Rotation for Right Hand Cam:

CW Input Side 1 CCW Output
CCW Input Side 2 CCW Output

NOTE: Input can be driven in either direction

Indexer Housing Mounting Holes

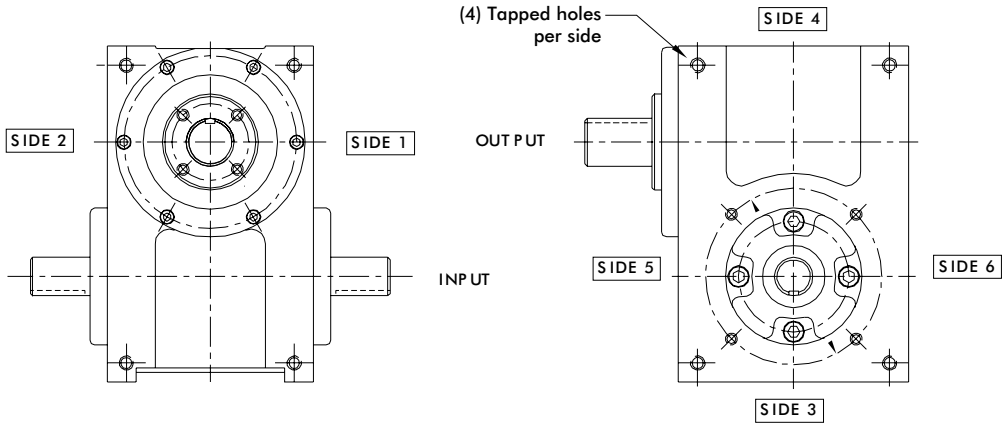

Dimensions and technical information are subject to change without notice

Roller Gear Index Drive | Indexer Mounting Position

OVOI (output vertical, over input)	OVUI (output vertical, under input)	OHOI (output horizontal, over input)	OHUI (output horizontal, under input)	H-S1-UP (output horizontal, side 1 up)	H-S2-UP (output horizontal, side 2 up)
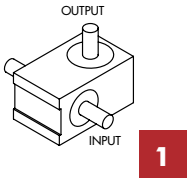	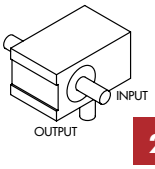	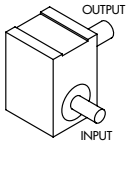	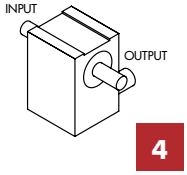	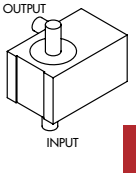	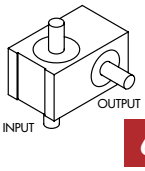

Gear Reducer Mounting Positions (Figure 4)

	Mounting "A"		Mounting "B"	
	RH	LH	RH	LH
SIDE 1	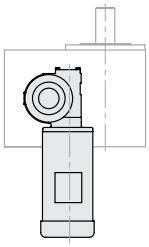 A	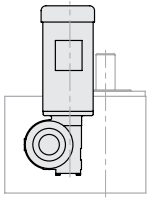 B	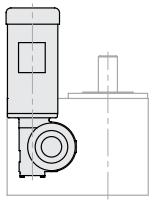 C	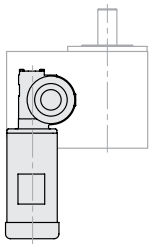 D
SIDE 2	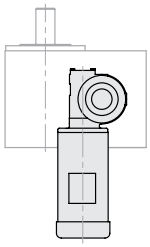 E	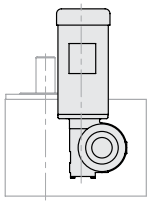 F	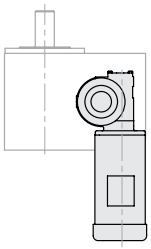 G	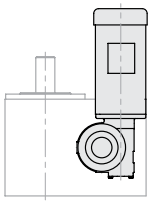 H

	Mounting "C"		Mounting "D"	
	RH	LH	RH	LH
SIDE 1	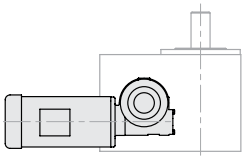 J	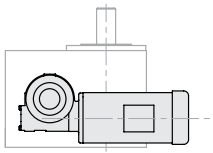 K	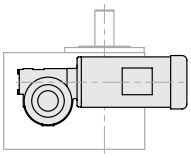 L	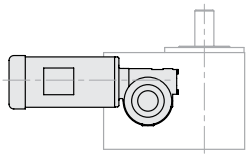 M
SIDE 2	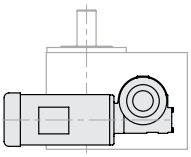 N	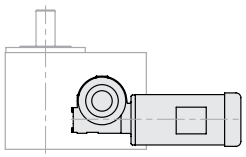 P	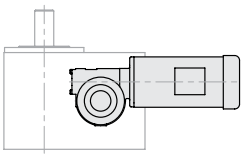 R	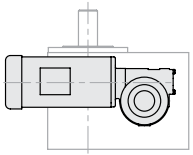 S

40RGD/40RGS SERIES

Roller Gear Index Drive | Dimensions

40RGD

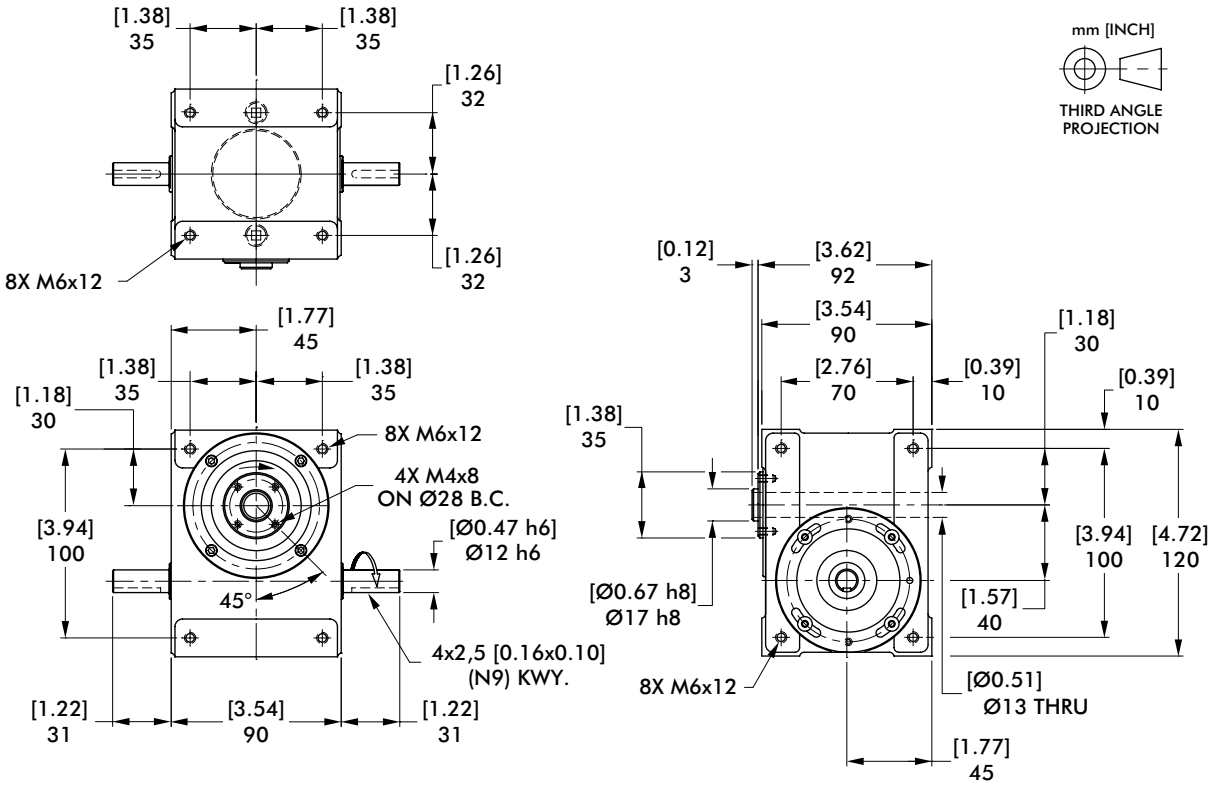

40RGS

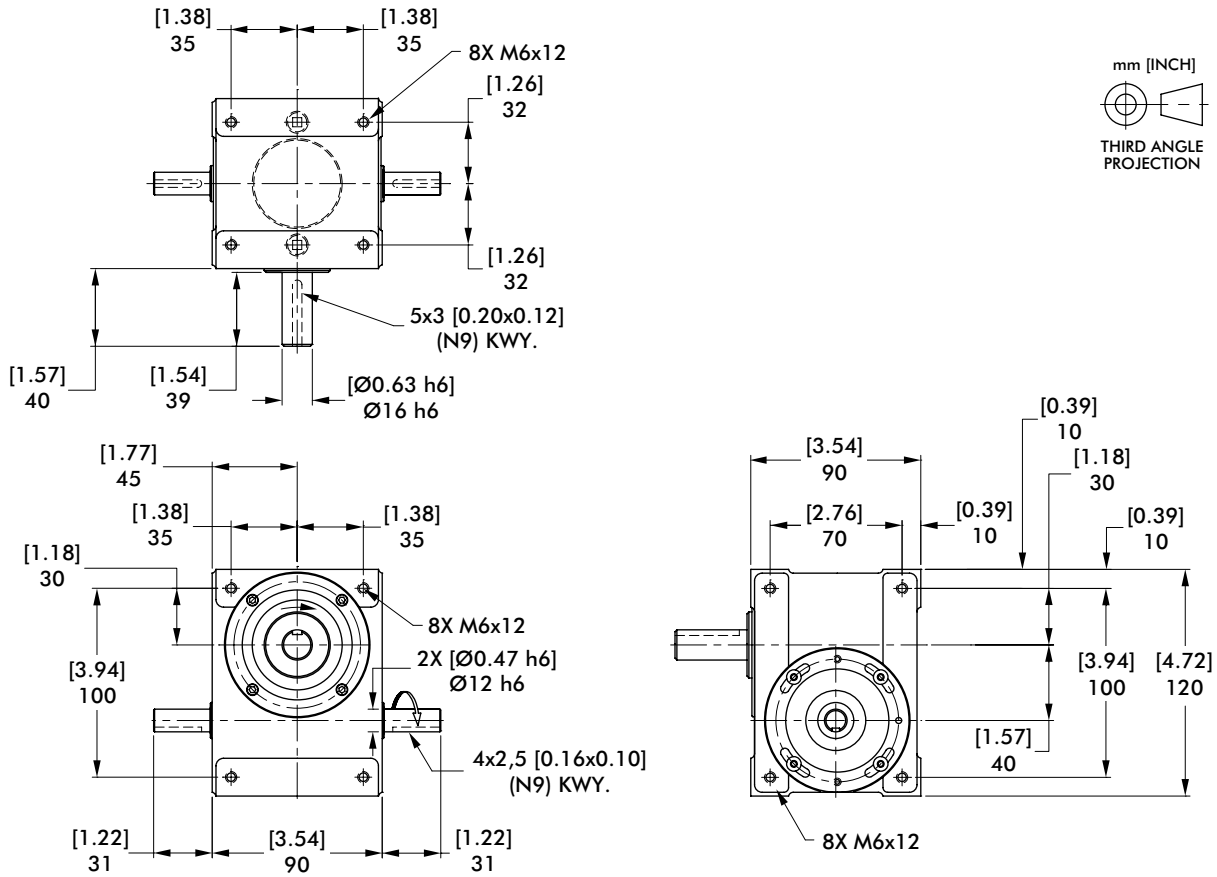

Dimensions and technical information are subject to change without notice

40RGD/40RGS Indexer Capacities						
Stops	**Index Period**	**Motion**	**B_{10} Capacity at 50 RPM N-m [in-lb]**	**RGD Internal Inertia kg-cm² [lb-in²]**	**RGS Internal Inertia kg-cm² [lb-in²]**	**Model**
2	270	ms	17 [150]	0,9 [0.3]	1,2 [0.4]	40RG(D/S)2H12-270
3	270	ms	21 [187]	0,9 [0.3]	1,2 [0.4]	40RG(D/S)3H12-270
4	270	ms	24 [214]	1,2 [0.4]	1,2 [0.4]	40RG(D/S)4H12-270
	180	ms	25 [225]	1,2 [0.4]	1,2 [0.4]	40RG(D/S)4H12-180
6	270	ms	22 [193]	0,9 [0.3]	1,2 [0.4]	40RG(D/S)6H12-270
	90	ms	24 [216]	0,9 [0.3]	1,2 [0.4]	40RG(D/S)6H12-90
8	270	ms	24 [216]	1,2 [0.4]	1,2 [0.4]	40RG(D/S)8H12-270
	90	ms	28 [249]	1,2 [0.4]	1,2 [0.4]	40RG(D/S)8H12-90
12	270	ms	14 [124]	0,9 [0.3]	1,2 [0.4]	40RG(D/S)12H9-270
	90	ms	16 [139]	0,9 [0.3]	1,2 [0.4]	40RG(D/S)12H9-90
16	270	ms	29 [254]	1,2 [0.4]	1,2 [0.4]	40RG(D/S)16H12-270 II
	120	ms	35 [312]	1,2 [0.4]	1,2 [0.4]	40RG(D/S)16H12-120 II
24	180	ms	20 [173]	0,9 [0.3]	1,2 [0.4]	40RG(D/S)24H9-180 II
	120	ms	37 [326]	0,9 [0.3]	1,2 [0.4]	40RG(D/S)24H12-120 III

Other Motions (stops and index periods) available. Contact your DESTACO sales representative for more information.

Features

- Fully Metric
- Universal Mounting: mounting holes on any of 6 sides
- Center Through Hole (Ø13 mm [Ø.50 in]) in RGD model.
- Right Hand Cam

Optional Accessories

- STM RMI28 Gear Reducer (ratios from 7:1 to 100:1) with
  – IEC56B14 Motor Adapter
  – 1/12 HP AC Motor and Inverter Drive (up to 60 cpm)
- Single or Dual Cycle Cam and Limit Switch
- Left Hand Cam
- Relief in Dwell for shot-pin applications

Output Load Capacity (loads carried during index):

	RGD	**RGS**
Radial	4924 N [1107 lbs]	916 N [206 lbs]
Thrust/Axial	3519 N [791 lbs]	2189 N [492 lbs]
Moment	86 N-m [762 in-lb]	46 N-m [405 in-lb]

Accuracy ±90 arcsec / ±0,033 mm [±.0013 in] at 76,2 mm [3 in] Radius

Repeatability ±22 arcsec / ±0,008 mm [±.0003 in] at 76,2 mm [3 in] Radius

50RGD/50RGS SERIES

Roller Gear Index Drive | Dimensions

50RGD

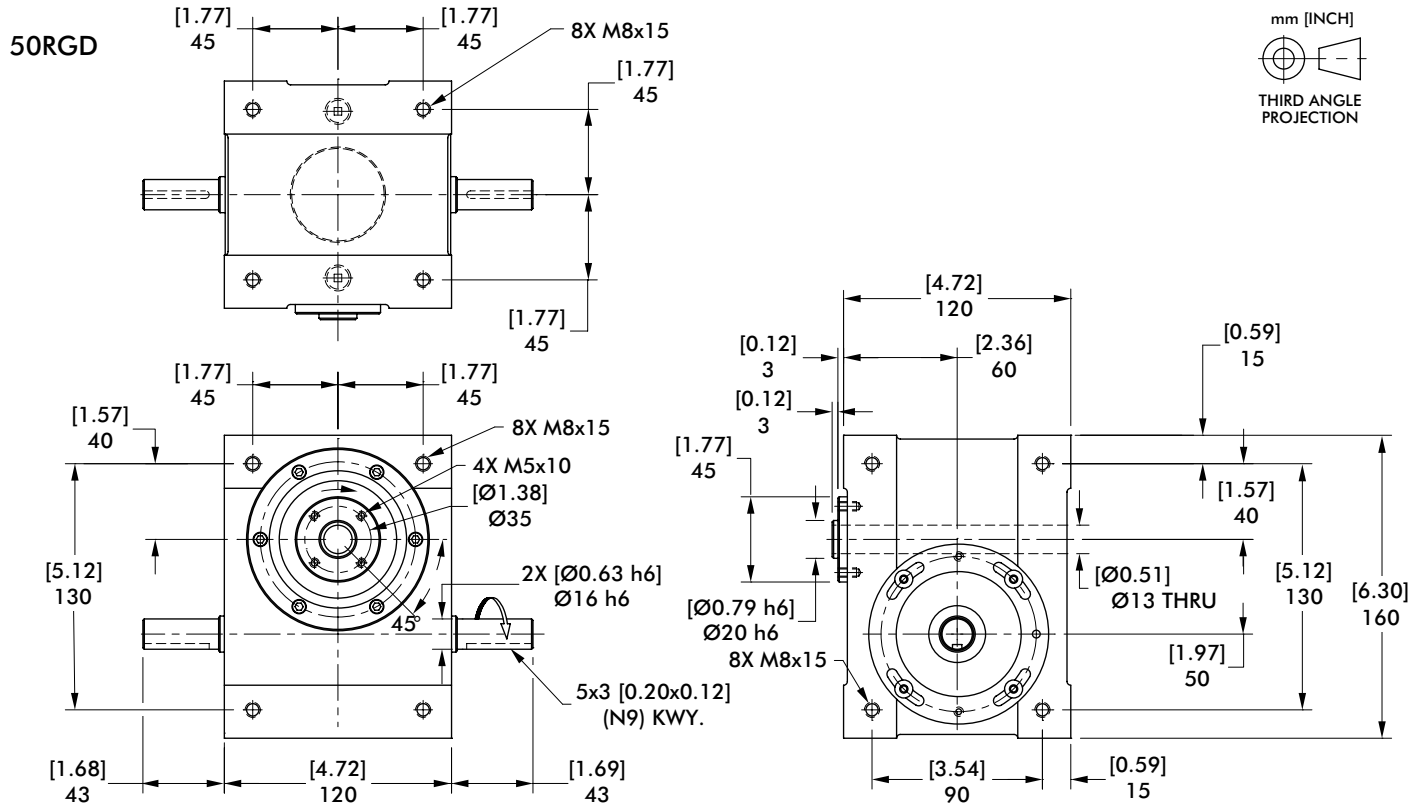

50RGS

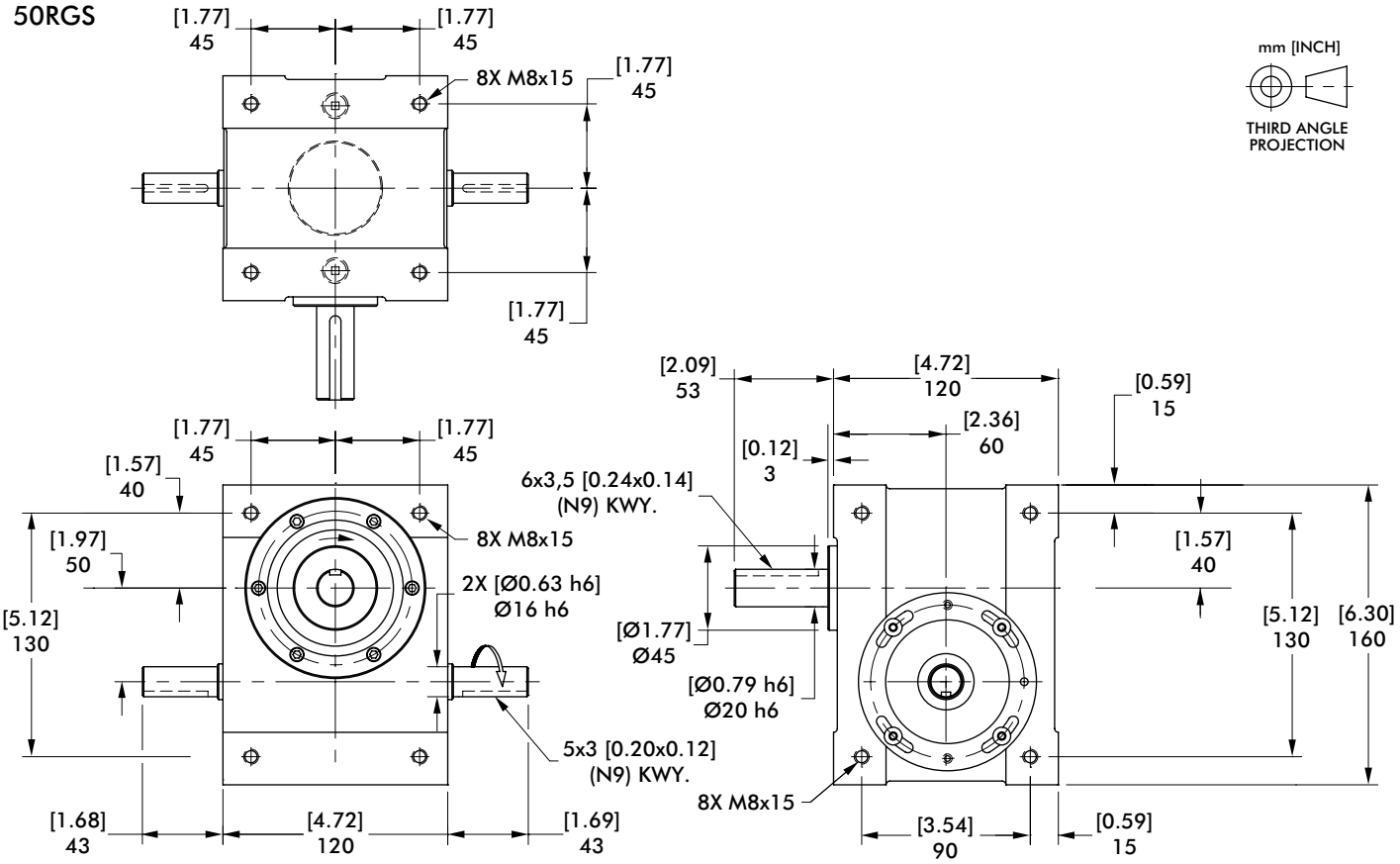

Dimensions and technical information are subject to change without notice

40RGD/40RGS Indexer Capacities						
Stops	**Index Period**	**Motion**	**B_{10} Capacity at 50 RPM N-m [in-lb]**	**RGD Internal Inertia kg-cm² [lb-in²]**	**RGS Internal Inertia kg-cm² [lb-in²]**	**Model**
2	270	msc.50	70 [621]	4,1 [1.4]	4,7 [1.6]	50RG(D/S)2H18-270
3	270	ms	32 [287]	3,8 [1.3]	4,4 [1.5]	50RG(D/S)3H14-270
	180	ms	34 [300]	3,8 [1.3]	4,4 [1.5]	50RG(D/S)3H14-180
4	270	ms	37 [326]	4,1 [1.4]	4,4 [1.5]	50RG(D/S)4H14-270
	180	ms	40 [351]	4,1 [1.4]	4,4 [1.5]	50RG(D/S)4H14-180
6	270	ms	68 [606]	4,1 [1.4]	4,7 [1.6]	50RG(D/S)6H18-270
	90	ms	83 [734]	4,1 [1.4]	4,7 [1.6]	50RG(D/S)6H18-90
8	270	ms	38 [336]	4,1 [1.4]	4,4 [1.5]	50RG(D/S)8H14-270
	90	ms	46 [403]	4,1 [1.4]	4,4 [1.5]	50RG(D/S)8H14-90
12	270	ms	31 [275]	4,1 [1.4]	4,4 [1.5]	50RG(D/S)12H12-270
	90	ms	37 [329]	4,1 [1.4]	4,4 [1.5]	50RG(D/S)12H12-90
16	180	ms	51 [447]	4,1 [1.4]	4,4 [1.5]	50RG(D/S)16H14-180 II
24	180	ms	42 [374]	4,1 [1.4]	4,4 [1.5]	50RG(D/S)24H12-180 II
	120	ms	46 [409]	4,1 [1.4]	4,4 [1.5]	50RG(D/S)24H12-120 II

Other Motions (stops and index periods) available. Contact your DESTACO sales representative for more information.

Features

- Fully Metric
- Universal Mounting: mounting holes on any of 6 sides
- Center Through Hole (Ø15 mm [Ø.59 in]) in RGD model.
- Right Hand Cam

Optional Accessories

- R180 Reducer (Ratios from 15:1 to 60:1)
  – Double Extended Worm Shaft (Input)
  – Worm Shaft Handwheel
- 1/3 HP AC Drive Package with Inverter Duty Motor and IM-pAC AC Drive (up to 60 cpm)
- Cycle Cam and Limit Switch Mounted to Camshaft
- Right Hand Cam
- Universal Mounting Capability

Output Load Capacity (loads carried during index):

	RGD	**RGS**
Radial	7896 N [1775 lbs]	1686 N [379 lbs]
Thrust/Axial	4115 N [925 lbs]	2424 N [545 lbs]
Moment	178 N-m [1572 in-lb]	89 N-m [791 in-lb]

Accuracy ±73 arcsec / ±0,028 mm [±.0011 in] at 76,2 mm [3 in] Radius

Repeatability ±18 arcsec / ±0,008 mm [±.0003 in] at 76,2 mm [3 in] Radius

70RGD/70RGS SERIES

Roller Gear Index Drive | Dimensions

70RGD

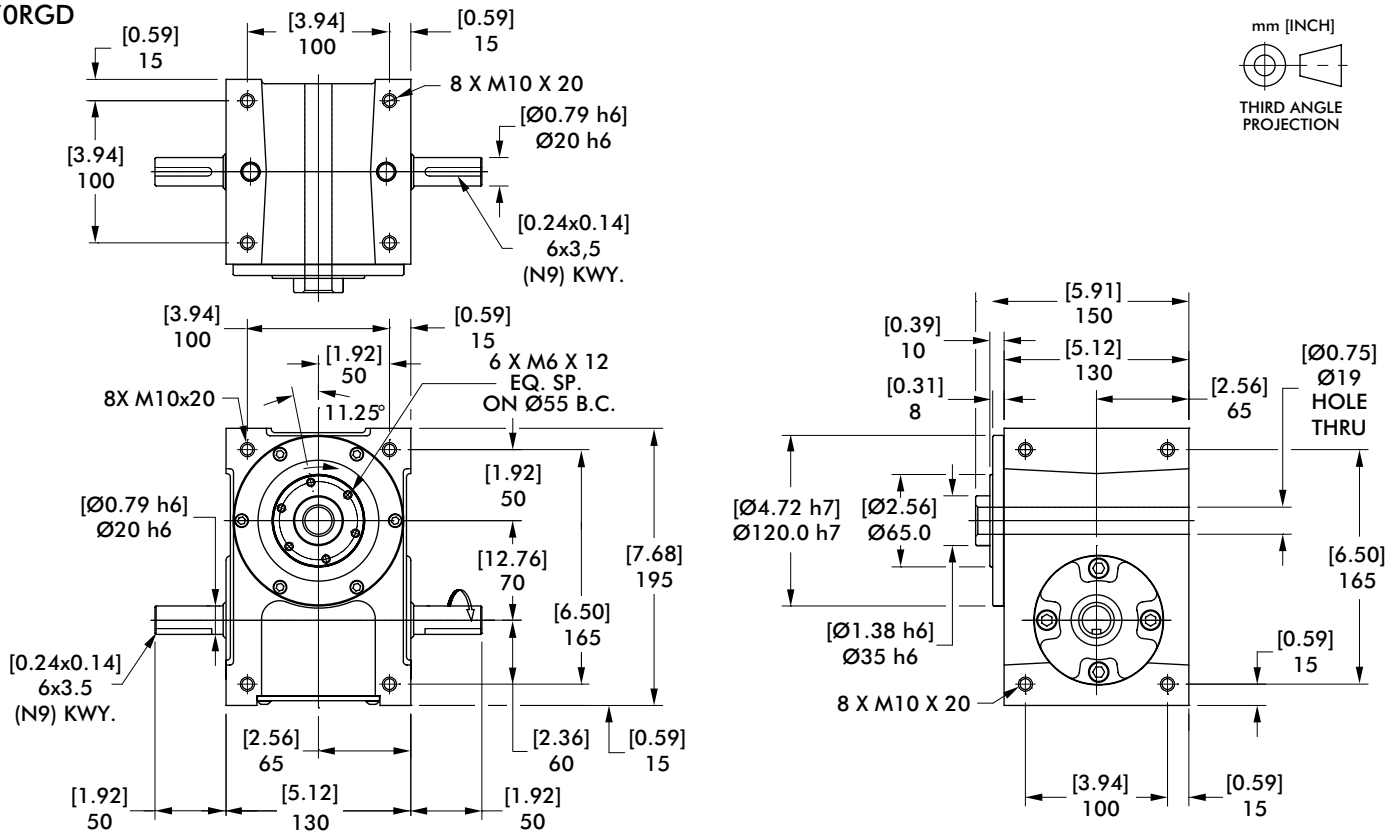

70RGS

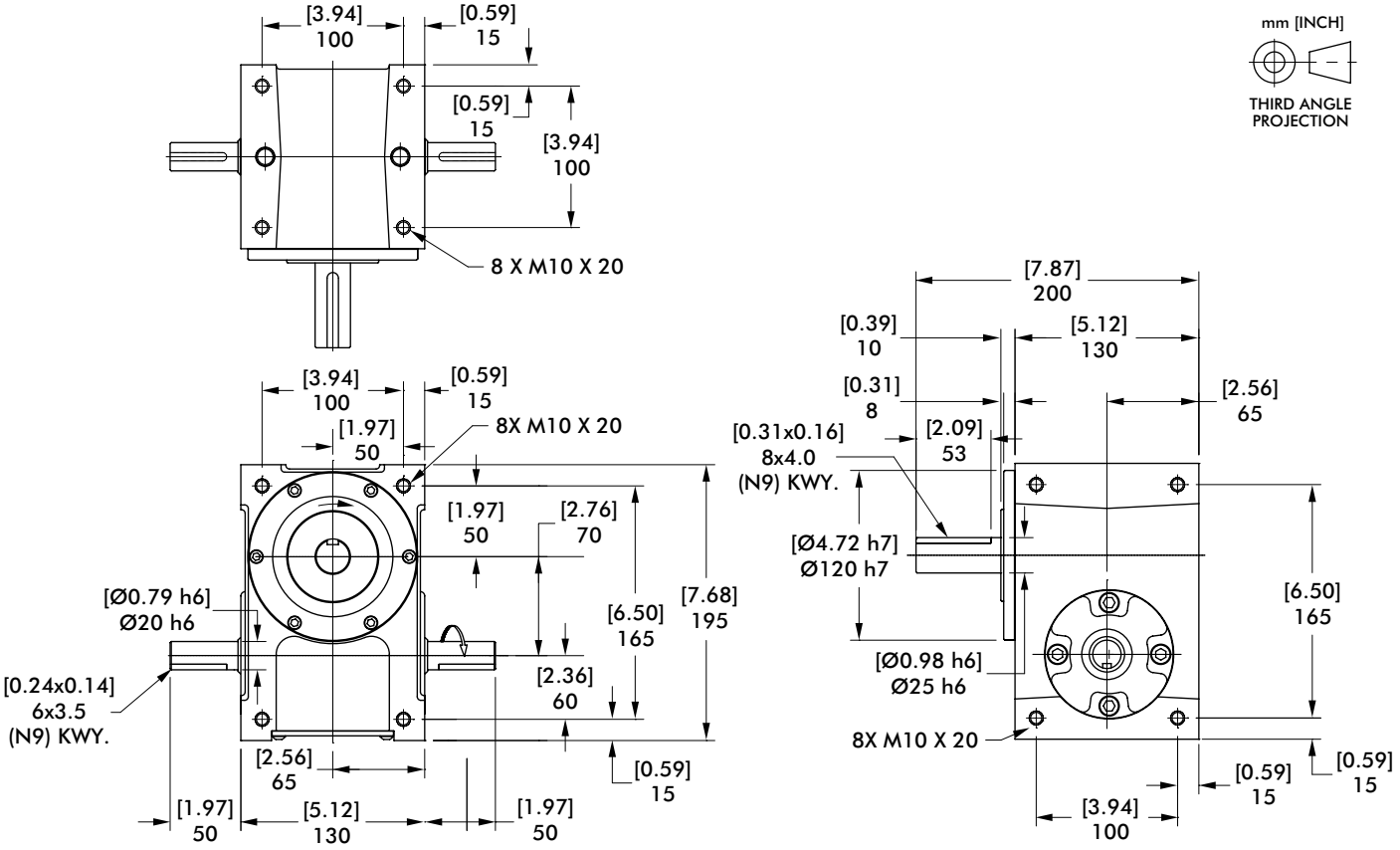

Dimensions and technical information are subject to change without notice

40RGD/40RGS Indexer Capacities						
Stops	**Index Period**	**Motion**	**B_{10} Capacity at 50 RPM N-m [in-lb]**	**RGD Internal Inertia kg-cm² [lb-in²]**	**RGS Internal Inertia kg-cm² [lb-in²]**	**Model**
2	270	ms	66 [585]	20,5 [7]	23,4 [8]	70RG(D/S)2H20-270
	180	ms	63 [562]	20,5 [7]	23,4 [8]	70RG(D/S)2H18-180
3	270	ms	81 [720]	20,5 [7]	23,4 [8]	70RG(D/S)3H20-270
	180	ms	85 [753]	20,5 [7]	23,4 [8]	70RG(D/S)3H20-180
4	270	ms	93 [821]	26,3 [9]	29,3 [10]	70RG(D/S)4H20-270
	120	msc,33	125 [1107]	29,3 [10]	29,3 [10]	70RG(D/S)4H18-120
6	270	ms	159 [1406]	26,3 [9]	29,3 [10]	70RG(D/S)6H24-270
	90	msc,33	238 [2110]	26,3 [9]	29,3 [10]	70RG(D/S)6H24-90
8	270	ms	96 [853]	26,3 [9]	29,3 [10]	70RG(D/S)8H20-270
	90	ms	120 [1063]	26,3 [9]	29,3 [10]	70RG(D/S)8H20-90
12	270	ms	53 [470]	29,3 [10]	29,3 [10]	70RG(D/S)12H14-270
	90	ms	66 [584]	29,3 [10]	29,3 [10]	70RG(D/S)12H14-90
24	180	ms	72 [635]	29,3 [10]	29,3 [10]	70RG(D/S)24H14-180 II

Other Motions (stops and index periods) available. Contact your DESTACO sales representative for more information.

Features

- Fully Metric
- Universal Mounting: mounting holes on any of 6 sides
- Center Through Hole (Ø19 mm [Ø.75 in]) in RGD model.
- Right Hand Cam

Optional Accessories

- R180 Reducer (Ratios from 5:1 to 60:1)
- 1/3 HP AC Drive Package with Inverter Duty Motor and Inverter Drive (up to 60 cpm)
- 1/3 HP DC Motor with Varipak DC Motor Control (up to 30 cpm)
- Single or Dual Cycle Cam and Limit Switch
- Left Hand Cam
- Relief in Dwell for shot-pin applications

Output Load Capacity (loads carried during index):

	RGD	**RGS**
Radial	12602 N [2833 lbs]	2491 N [560 lbs]
Thrust/Axial	9893 N [2224 lbs]	3567 N [802 lbs]
Moment	410 N-m [3626 in-lb]	175 N-m [1545 in-lb]

Accuracy ±50 arcsec / ±0,020 mm [±.0008 in] at 76,2 mm [3 in] Radius

Repeatability ±13 arcsec / ±0,005 mm [±.0002 in] at 76,2 mm [3 in] Radius

80RGD/80RGS SERIES

Roller Gear Index Drive | Dimensions

80RGD

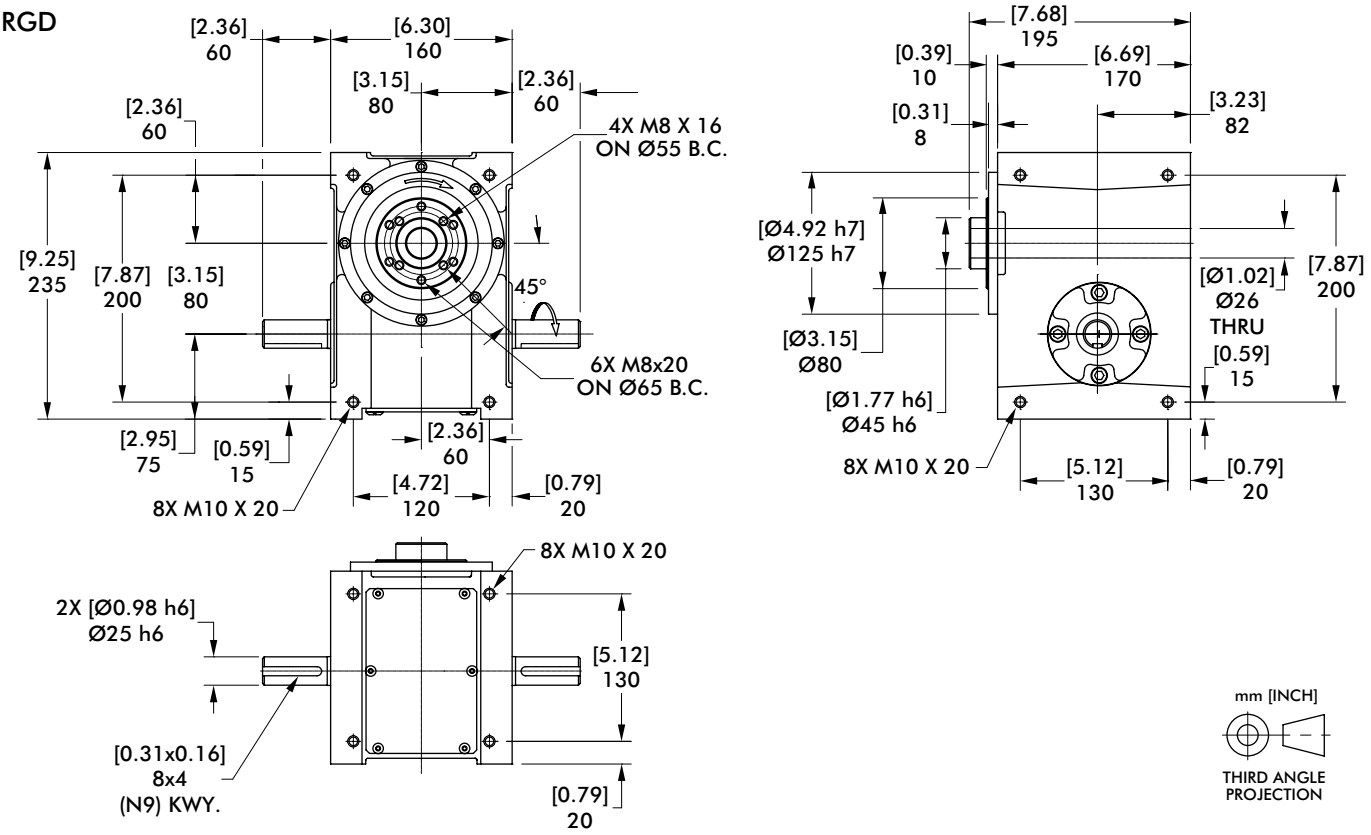

80RGS

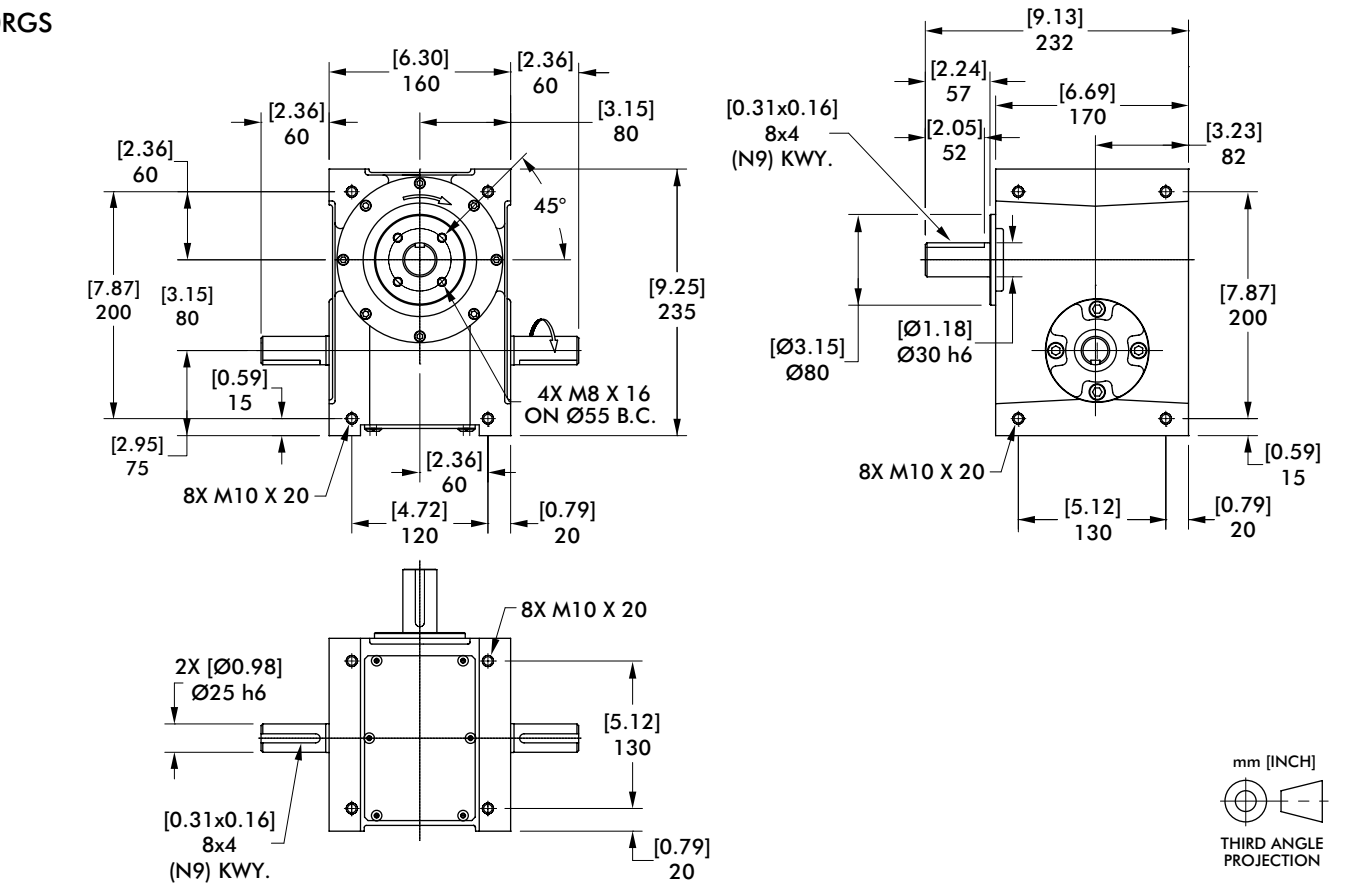

Dimensions and technical information are subject to change without notice

40RGD/40RGS Indexer Capacities						
Stops	**Index Period**	**Motion**	**B_{10} Capacity at 50 RPM N-m [in-lb]**	**RGD Internal Inertia kg-cm² [lb-in²]**	**RGS Internal Inertia kg-cm² [lb-in²]**	**Model**
2	330	ms	129 [1144]	46,8 [16]	49,7 [17]	80RG(D/S)2H24-330
	270	msc.33	157 [1388]	46,8 [16]	49,7 [17]	80RG(D/S)2H24-270
3	270	ms	161 [1422]	46,8 [16]	49,7 [17]	80RG(D/S)3H24-270
	180	ms	171 [1513]	46,8 [16]	49,7 [17]	80RG(D/S)3H24-180
4	270	ms	188 [1663]	61,5 [21]	61,5 [21]	80RG(D/S)4H24-270
	180	msc.33	269 [2377]	61,5 [21]	61,5 [21]	80RG(D/S)4H24-180
6	270	ms	172 [1524]	52,7 [18]	55,6 [19]	80RG(D/S)6H28-270
	90	msc.50	262 [2323]	52,7 [18]	55,6 [19]	80RG(D/S)6H28-90
8	270	ms	196 [1733]	61,5 [21]	61,5 [21]	80RG(D/S)8H24-270
	90	msc.33	332 [2937]	61,5 [21]	61,5 [21]	80RG(D/S)8H24-90
12	270	ms	114 [1011]	58,5 [20]	58,5 [20]	80RG(D/S)12H18-270
	90	msc.60	195 [1725]	58,5 [20]	58,5 [20]	80RG(D/S)12H18-90

Other Motions (stops and index periods) available. Contact your DESTACO sales representative for more information.

Features

- Fully Metric
- Universal Mounting: mounting holes on any of 6 sides
- Center Through Hole (Ø26 mm [Ø1.02 in]) in RGD model.
- Right Hand Cam

Optional Accessories

- R180 Reducer (Ratios from 5:1 to 60:1)
- 1/3 HP AC Drive Package with Inverter Duty Motor and Inverter Drive (up to 60 cpm)
- 1/3 HP DC Motor with Varipak DC Motor Control (up to 30 cpm)
- Single or Dual Cycle Cam and Limit Switch
- Left Hand Cam
- Relief in Dwell for shot-pin applications

Output Load Capacity (loads carried during index):

	RGD	**RGS**
Radial	21,307 N [4790 lbs]	5289 N [1189 lbs]
Thrust/Axial	15435 N [3470 lbs]	5542 N [1246 lbs]
Moment	852 N-m [7544 in-lb]	302 N-m [2669 in-lb]

Accuracy ±48 arcsec / ±0,018 mm [±.0007 in] at 76,2 mm [3 in] Radius

Repeatability ±12 arcsec / ±0,005 mm [±.0002 in] at 76,2 mm [3 in] Radius

110RGD/110RGS SERIES

Roller Gear Index Drive | Dimensions

110RGD

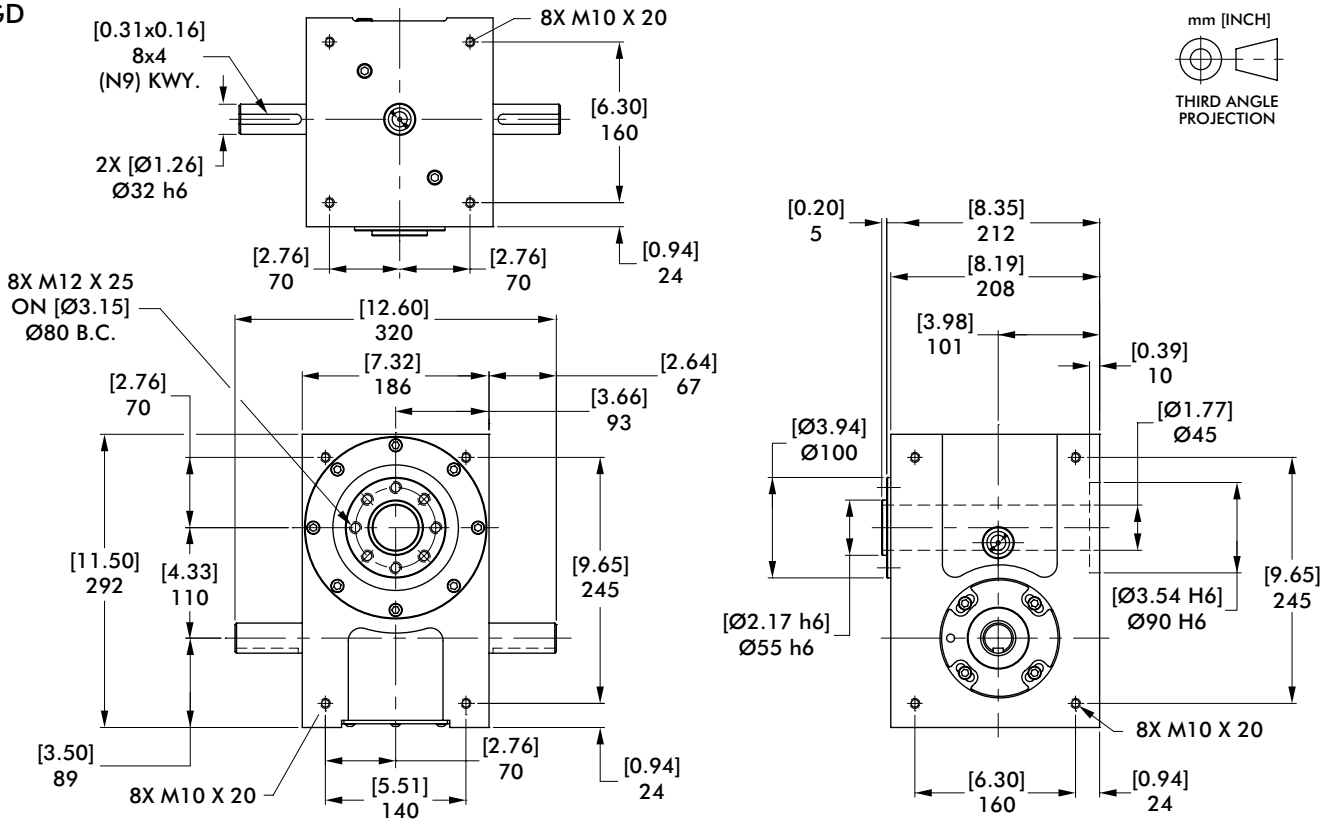

110RGS

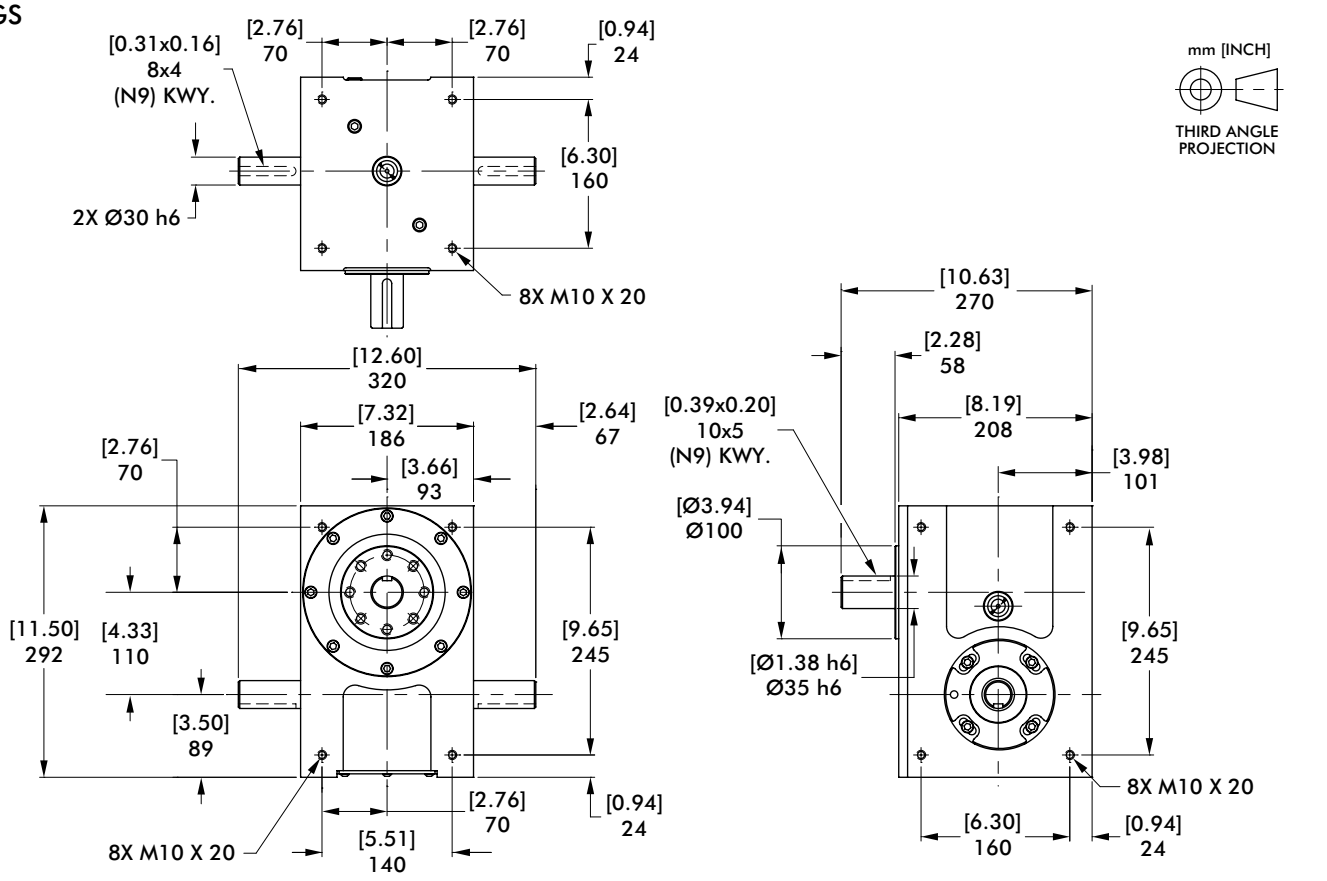

Dimensions and technical information are subject to change without notice

110RGD/110RGS Indexer Capacities						
Stops	**Index Period**	**Motion**	**B_{10} Capacity at 50 RPM N-m [in-lb]**	**RGD Internal Inertia kg-cm² [lb-in²]**	**RGS Internal Inertia kg-cm² [lb-in²]**	**Model**
2	300	msc.33	596 [5271]	149,2 [51]	163,9 [56]	110RG(D/S)2H40-300
	270	msc.50	692 [6126]	149,2 [51]	163,9 [56]	110RG(D/S)2H40-270
3	270	ms	634 [5609]	149,2 [51]	163,9 [56]	110RG(D/S)3H40-270
	180	msc.50	885 [7829]	149,2 [51]	163,9 [56]	110RG(D/S)3H40-180
4	270	ms	371 [3282]	140,5 [48]	161,0 [55]	110RG(D/S)4H32-270
	180	msc.33	469 [4147]	140,5 [48]	161,0 [55]	110RG(D/S)4H32-180
6	270	ms	834 [7378]	152,2 [52]	204,8 [70]	110RG(D/S)6H48-270
	120	msc.33	918 [8127]	149,2 [51]	163,9 [56]	110RG(D/S)6H40-120
8	270	ms	389 [3440]	140,5 [48]	161,0 [55]	110RG(D/S)8H32-270
	120	ms	469 [4149]	140,5 [48]	161,0 [55]	110RG(D/S)8H32-120
12	270	ms	318 [2815]	137,5 [47]	161,0 [55]	110RG(D/S)12H28-270
	120	ms	380 [3367]	131,7 [45]	149,2 [51]	110RG(D/S)12H24-120
16	270	ms	182 [1610]	131,7 [45]	155,1 [53]	110RG(D/S)16H20-270
	120	ms	225 [1992]	131,7 [45]	155,1 [53]	110RG(D/S)16H20-120
24	270	ms	412 [3650]	131,7 [45]	149,2 [51]	110RG(D/S)24H24-270 II
	180	ms	467 [4134]	131,7 [45]	149,2 [51]	110RG(D/S)24H24-180 II

Other Motions (stops and index periods) available. Contact your DESTACO sales representative for more information.

Features

- Fully Metric
- Universal Mounting: mounting holes on any of 6 sides
- Center Through Hole (Ø45 mm [Ø1.77 in]) in RGD model.
- Right Hand Cam

Optional Accessories

- KH37 Reducer
  – Ratios from 5.36:1 to 106.38:1 (consult factory for exact ratios available)
  – 1 HP AC Drive Package with Inverter Duty Motor and Inverter Drive (up to 60 cpm)
- Single or Dual Cycle Cam and Limit Switch
- Left Hand Cam
- Relief in Dwell for shot-pin applications

Output Load Capacity (loads carried during index):

	RGD	RGS
Radial	24968 N [5613 lbs]	8256 N [1156 lbs]
Thrust/Axial	19621 N [4411 lbs]	9132 N [2053 lbs]
Moment in-lb]	1248 N-m [11050 in-lb]	479 N-m [4238

Accuracy ±30 arcsec / ±0,023 mm [±.0009 in] at 152,4 mm [6 in] Radius

Repeatability ±8 arcsec / ±0,005 mm [±.0002 in] at 152,4 mm [6 in] Radius

350RGD/350RGS SERIES

Roller Gear Index Drive | Dimensions

350RGD

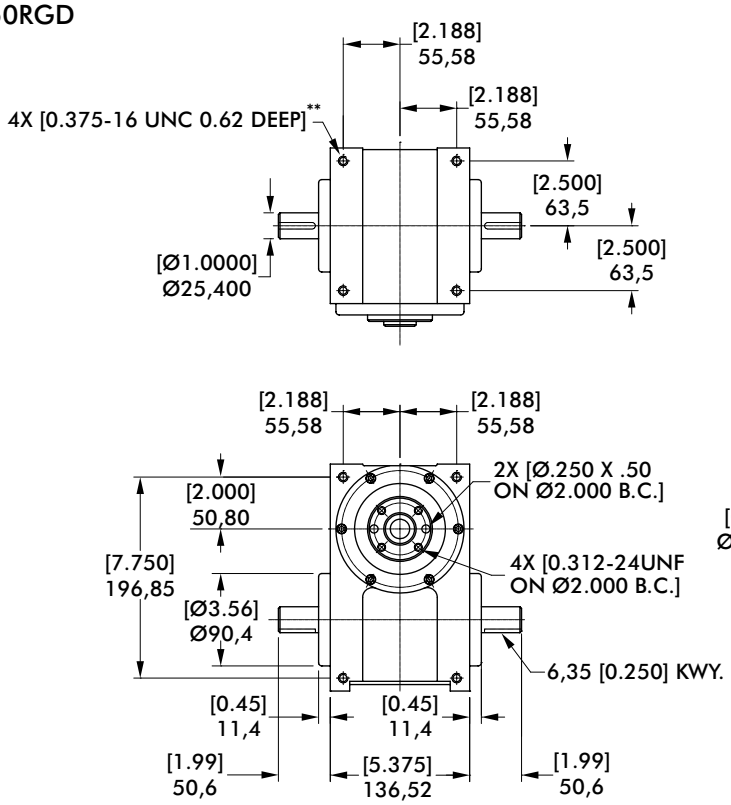

** 4 TAPPED MOUNTING HOLES IN ANY ONE OF SIX FINISHED SIDES, TO BE SPECIFIED BY CUSTOMER

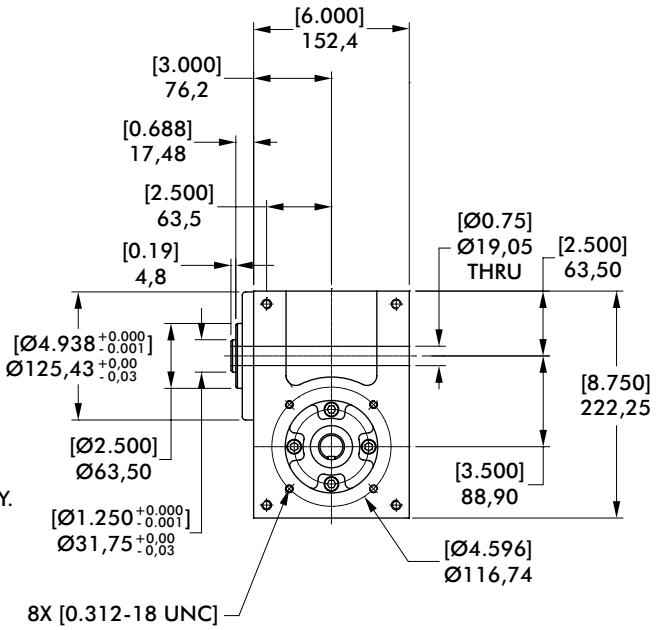

350RGS

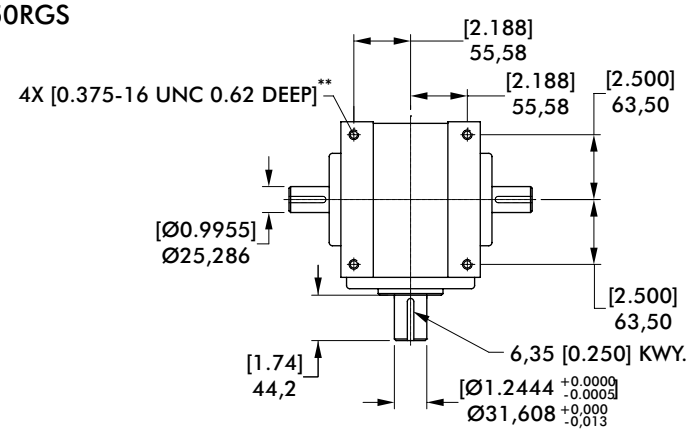

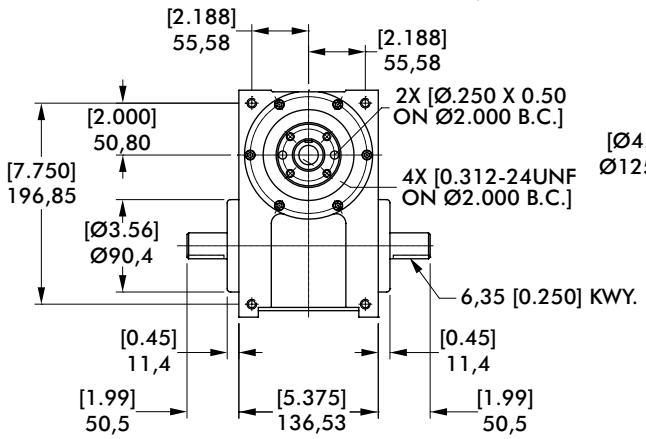

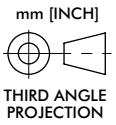

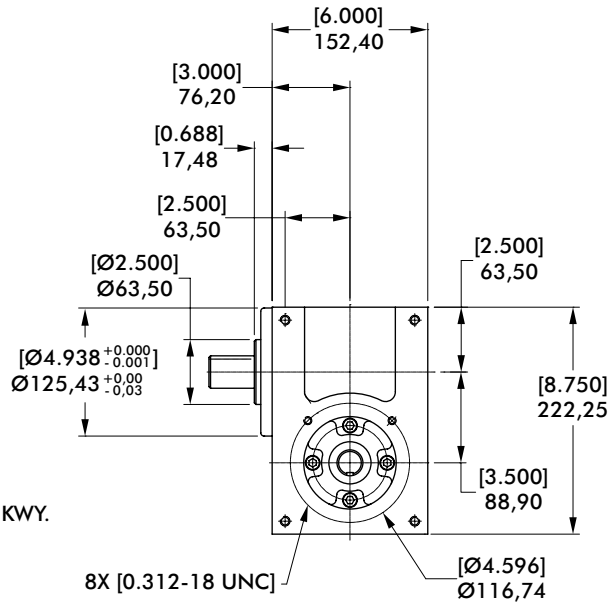

Dimensions and technical information are subject to change without notice

350RGD/350RGS Indexer Capacities						
Stops	**Index Period**	**Motion**	**B_{10} Capacity at 50 RPM N-m [in-lb]**	**RGD Internal Inertia kg-cm² [lb-in²]**	**RGS Internal Inertia kg-cm² [lb-in²]**	**Model**
1	330	msc.50	200 [1774]	22,5 [7.7]	28,4 [9.7]	350RG(D/S)1H24-330
2	270	ms	141 [1244]	22,5 [7.7]	28,4 [9.7]	350RG(D/S)2H24-270
	180	msc.67	231 [2047]	22,5 [7.7]	28,4 [9.7]	350RG(D/S)2H24-180
3	270	ms	173 [1530]	22,5 [7.7]	28,4 [9.7]	350RG(D/S)3H24-270
	180	ms	181 [1601]	22,5 [7.7]	28,4 [9.7]	350RG(D/S)3H24-180
4	300	ms	192 [1701]	23,7 [8.1]	29,6 [10.1]	350RG(D/S)4H24-300
	180	ms	226 [2001]	23,7 [8.1]	29,6 [10.1]	350RG(D/S)4H24-180
6	270	ms	182 [1615]	22,5 [7.7]	28,4 [9.7]	350RG(D/S)6H24-270
	90	ms	233 [2063]	22,5 [7.7]	28,4 [9.7]	350RG(D/S)6H24-90
8	270	ms	208 [1840]	23,7 [8.1]	29,6 [10.1]	350RG(D/S)8H24-270
	90	ms	307 [2716]	23,7 [8.1]	29,6 [10.1]	350RG(D/S)8H24-90
12	270	ms	128 [1132]	23,1 [7.9]	29,0 [9.9]	350RG(D/S)12H20-270
	90	ms	167 [1476]	23,1 [7.9]	29,0 [9.9]	350RG(D/S)12H20-90

Other Motions (stops and index periods) available. Contact your DESTACO sales representative for more information.

Features

- Universal Mounting: mounting holes on any of 6 sides
- Center Through Hole (Ø19.05 mm [Ø.75 in]) in RGD model.
- Right Hand Cam Standard

Optional Accessories

- R180 Reducer (Ratios from 5:1 to 60:1)
  - 1/3 HP AC Drive Package with Inverter Duty Motor and Inverter Drive (up to 60 cpm)
  - 1/3 HP DC Motor with Varipak DC Motor Control (up to 30 cpm)
- R225 Reducer (Ratios from 5:1 to 60:1)
  - 56C Motor Adapter and Coupling
  - 1 HP AC Drive Package with Inverter Duty Motor and Inverter Drive (up to 60 cpm)
  - 1 HP DC Motor with Varipak DC Motor Control (up to 30 cpm)
- Single or Dual Cycle Cam and Limit Switch
- Relief in Dwell for shot-pin applications
- Left Hand Cam
- Relief in Dwell for shot-pin applications

Output Load Capacity (loads carried during index):

	RGD	**RGS**
Radial	8607 N [1935 lbs]	8042 N [1808 lbs]
Thrust/Axial	6254 N [1406 lbs]	3496 N [786 lbs]
Moment	273 N-m [2419 in-lb]	357 N-m [3164 in-lb]

Accuracy ±41 arcsec / ±0,030 mm [±.0012 in] at 152,4 mm [6 in] Radius

Repeatability ±10 arcsec / ±0,008 mm [±.0003 in] at 152,4 mm [6 in] Radius

500RGD/500RGS SERIES

Roller Gear Index Drive | Dimensions

500RGD

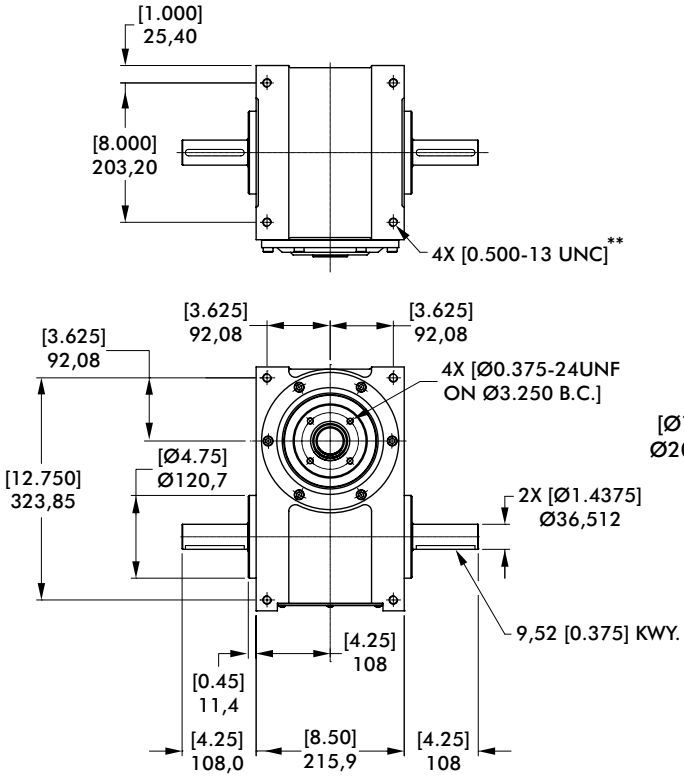

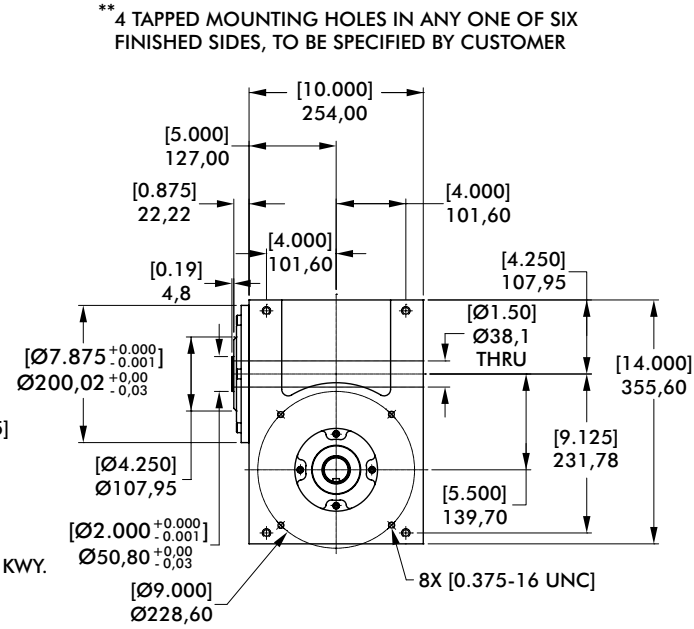

500RGS

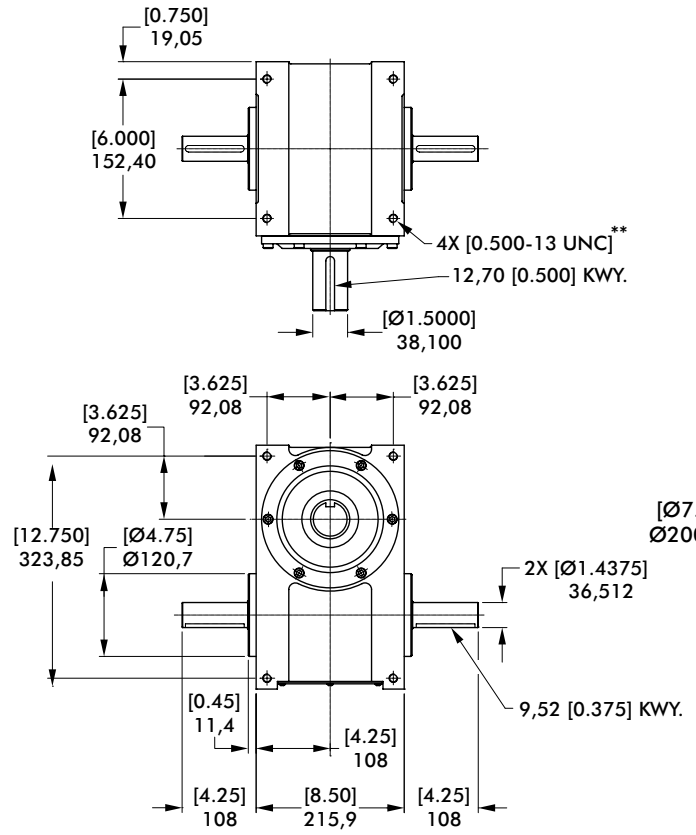

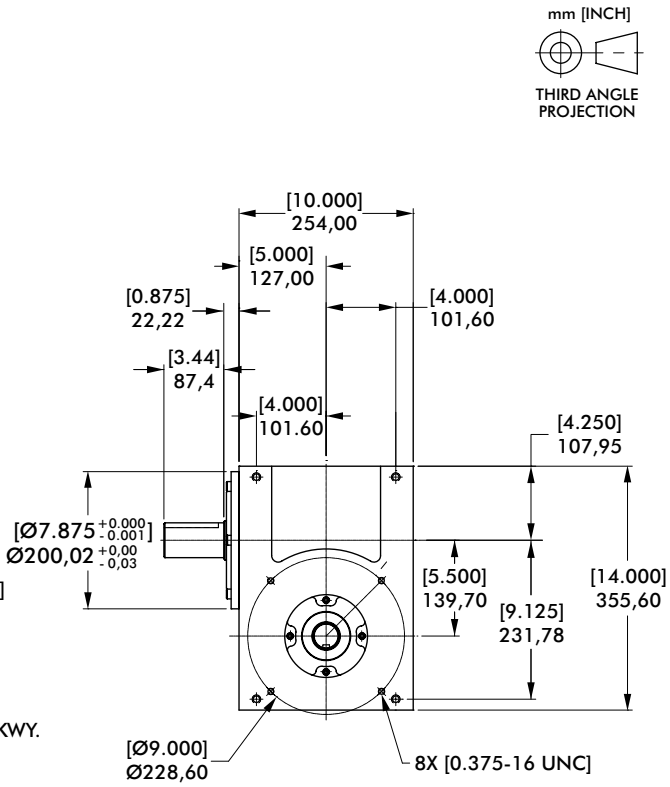

Dimensions and technical information are subject to change without notice

500RGD/500RGS Indexer Capacities						
Stops	**Index Period**	**Motion**	**B_{10} Capacity at 50 RPM N-m [in-lb]**	**RGD Internal Inertia kg-cm² [lb-in²]**	**RGS Internal Inertia kg-cm² [lb-in²]**	**Model**
1	330	msc.60	765 [6767]	181,4 [62]	131,7 [45]	500RG(D/S)1H40-330
2	270	ms	497 [4400]	181,4 [62]	131,7 [45]	500RG(D/S)2H40-270
3	270	ms	595 [5265]	181,4 [62]	131,7 [45]	500RG(D/S)3H40-270
	180	ms	645 [5706]	181,4 [62]	131,7 [45]	500RG(D/S)3H40-180
4	270	ms	692 [6121]	193,1 [66]	140,5 [48]	500RG(D/S)4H40-270
	120	msc.20	440 [3892]	175,6 [60]	122,9 [42]	500RG(D/S)4H32-120
6	270	ms	617 [5464]	181,4 [62]	131,7 [45]	500RG(D/S)6H40-270
	90	ms	781 [6909]	181,4 [62]	131,7 [45]	500RG(D/S)6H40-90
8	270	ms	695 [6151]	193,1 [66]	140,5 [48]	500RG(D/S)8H40-270
	90	ms	929 [8219]	193,1 [66]	140,5 [48]	500RG(D/S)8H40-90
12	270	ms	296 [2616]	169,7 [58]	117,1 [40]	500RG(D/S)12H28-270
	90	ms	390 [3449]	169,7 [58]	117,1 [40]	500RG(D/S)12H28-90

Other Motions (stops and index periods) available. Contact your DESTACO sales representative for more information.

Features

- Universal Mounting: mounting holes on any of 6 sides
- Center Through Hole (Ø38.1 mm [Ø1.50 in]) in RGD model.
- Right Hand Cam Standard

Optional Accessories

  – 1 hp AC Drive Package with Inverter Duty Motor and Inverter Drive (up to 60 cpm)
  – 1 hp DC Motor with Varipak DC Motor Control (up to 30 cpm)
- Single or Dual Cycle Cam and Limit Switch
- Output Overload Clutch Models: 11S, 11C, 11F, 11C-SD, 11S-SD, 11FC-SD
  – Available Settings (in-lbs): 2300, 4000, 6000, 8500, 11000
- Left Hand Cam
- Relief in Dwell for shot-pin applications
- Left Hand Cam

Output Load Capacity (loads carried during index):

	RGD	**RGS**
Radial	17811 N [4004 lbs]	16756 N [3767 lbs]
Thrust/Axial	12273 N [2759 lbs]	6374 N [1433 lbs]
Moment	961 N-m [8509 in-lb]	1464 N-m [12959 in-lb]

Accuracy ±29 arcsec / ±0,020 mm [±.0008 in] at 152,4 mm [6 in] Radius

Repeatability ±7 arcsec / ±0,005 mm [±.0002 in] at 152,4 mm [6 in] Radius

600RGD/600RGS SERIES

Roller Gear Index Drive | Dimensions

600RGD

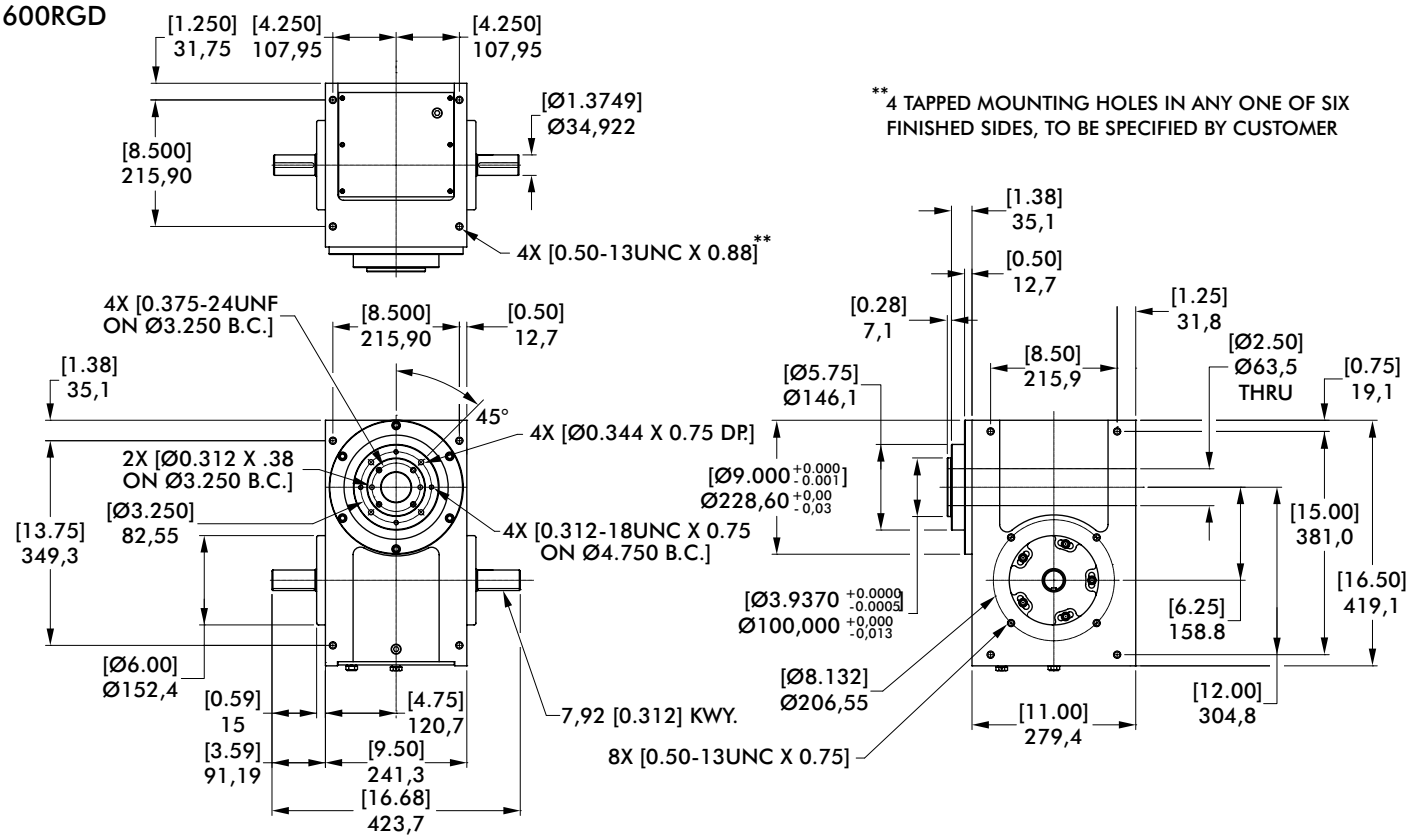

600RGS

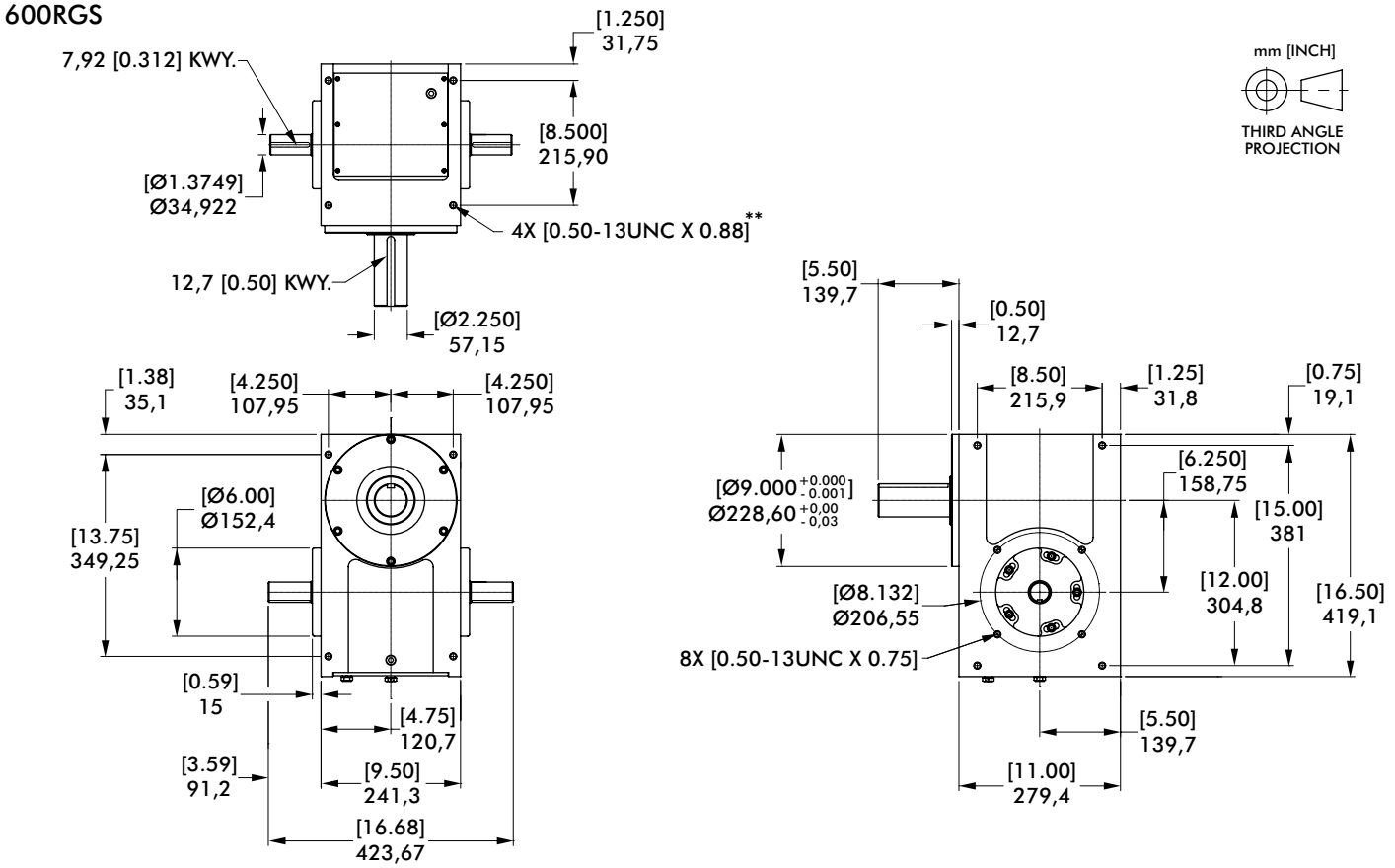

Dimensions and technical information are subject to change without notice

600RGD/600RGS Indexer Capacities						
Stops	**Index Period**	**Motion**	**B_{10} Capacity at 50 RPM N-m [in-lb]**	**RGD Internal Inertia kg-cm² [lb-in²]**	**RGS Internal Inertia kg-cm² [lb-in²]**	**Model**
2	300	ms	736 [6516]	749,2 [256]	400,9 [137]	600RG(D/S)2H48-300
3	270	ms	899 [7955]	749,2 [256]	400,9 [137]	600RG(D/S)3H48-270
	180	ms	991 [8769]	749,2 [256]	400,9 [137]	600RG(D/S)3H48-180
4	270	ms	763 [6749]	728,7 [249]	383,4 [131]	600RG(D/S)4H40-270
	180	ms	845 [7477]	728,7 [249]	383,4 [131]	600RG(D/S)4H40-180
6	270	ms	936 [8286]	749,2 [256]	400,9 [137]	600RG(D/S)6H48-270
	90	ms	1211 [10715]	749,2 [256]	400,9 [137]	600RG(D/S)6H48-90
8	270	ms	783 [6928]	714 [244]	368,7 [126]	600RG(D/S)8H40-270
	90	ms	1010 [8936]	714 [244]	368,7 [126]	600RG(D/S)8H40-90
12	270	ms	462 [4091]	714 [244]	368,7 [126]	600RG(D/S)12H32-270
	90	ms	615 [5444]	714 [244]	368,7 [126]	600RG(D/S)12H32-90
16	270	ms	1079 [9553]	728,7 [249]	383,4 [131]	600RG(D/S)16H40-270 II
	90	ms	1381 [12224]	728,7 [249]	383,4 [131]	600RG(D/S)16H40-90 II

Other Motions (stops and index periods) available. Contact your DESTACO sales representative for more information.

Features

- Universal Mounting: mounting holes on any of 6 sides
- Center Through Hole (Ø63.5 mm [Ø2.50 in]) in RGD model.
- Right Hand Cam Standard

Optional Accessories

- 7300C or 7350C Reducer (Ratios from 5:1 to 60:1)
- 1 or 2 hp AC Drive Package with Inverter Duty Motor and Inverter Drive (up to 60 cpm)
- 1 or 2 hp DC Motor with Varipak DC Motor Control (up to 30 cpm)
- Single or Dual Cycle Cam and Limit Switch
- Output Overload Clutch Models: 11FM, 11SM
  – Available Settings (in-lbs): 2300, 4000, 6000, 8500, 11000
- Left Hand Cam
- Relief in Dwell for shot-pin applications
- Left Hand Cam

Output Load Capacity (loads carried during index):

	RGD	**RGS**
Radial	25208 N [5667 lbs]	17028 N [3828 lbs]
Thrust/Axial	15693 N [3528 lbs]	15698 N [3529 lbs]
Moment	1841 N-m [16292 in-lb]	2085 N-m [18451 in-lb]

Accuracy ±40 arcsec / ±0,028 mm [±.0011 in] at 152,4 mm [6 in] Radius

Repeatability ±10 arcsec / ±0,008 mm [±.0003 in] at 152,4 mm [6 in] Radius

PRECISION INDEXING SOLUTIONS

Table of Contents

INDEXERS

Servo Positioners



GTB Series
Globoidal (Roller Gear)
Servo Positioner.....IN-SRV-1



RSD Series
Rotary Servo Drives.....IN-SRV-39

Mechanical Indexers



RDM Series
Rotary Index Drive IN-MCH-2



RD Series
Roller Dial Index Drive..... IN-MCH-18



E Series
Heavy-Duty Index Drive IN-MCH-30



RA Series
Right Angle Index Drive IN-MCH-42



RGD/RGS Series
Roller Gear Index Drive IN-MCH-52



P Series
Parallel Shaft/Flange Drive.... IN-MCH-72



RNG Series
Ring Drive Dial Indexer.....IN-MCH-84

OVERLOAD CLUTCHES



Overload Clutches
Output Overload..... IN-CLU-1

CUSTOM CAMS



Custom Cams
Cam Design Solutions IN-CAM-1

CONVEYORS



Rite-Link Series
Thin-Profile.....IN-CNV-1



Precision Link Series
Table-Top IN-CNV-4



Precision Link Series
Heavy-Duty IN-CNV-16

PARTS HANDLERS



LPP Series
Linear Part Handlers IN-PRT-2



RPP Series
Rotary Part Handlers IN-PRT-8

Dimensions and technical information are subject to change without notice

PARALLEL SHAFT/FLANGE DRIVES

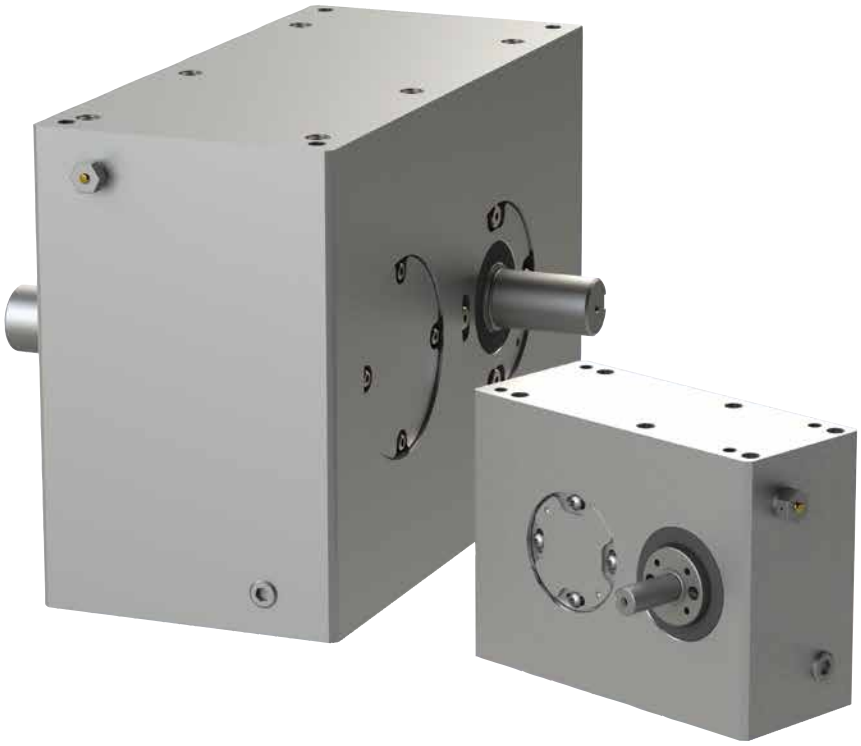

Features:

Camco Parallel Index Drives are ideal for high-speed applications or for actuation-type applications such as driving a linkage or a conveyor.

Hardened and ground conjugate cams

Yoke-mounted, preloaded cam followers are non-reversing for high capacity and speed capability

Whole or fractional stops, oscillating and complex custom motions are available

Long transfer distances achieved with simple linkages

Preloaded, tapered roller bearings for rigidity and backlash-free operation

Table of Contents

How to Order 3
250P 5
387P 7
512P 9
662P 11

P SERIES

Parallel Shaft/Flange Drives | How To Order

Indexer Ordering Procedure

1. Input Assembly: Right, Left or Double (DE)
2. Output Assembly: Right, Left or Double (DE).
   - Flanged output is primary output. For Double Output, specify whether flanged output is on right or left side.

NOTE: Input may rotate in either direction to achieve desired direction of output rotation.

3. Mounting Position: 1-6

Reducer Ordering Procedure

1. Model
2. Ratio: 5:1, 10:1, 15:1, 20:1, 25:1, 30:1, 40:1, 50:1, 60:1
3. Motor Adapter
4. Reducer Input Shaft Extension: Single Input (SE) or Double Input (DE)
5. Mounting (see diagram below)

Position of Shafts (Top View)

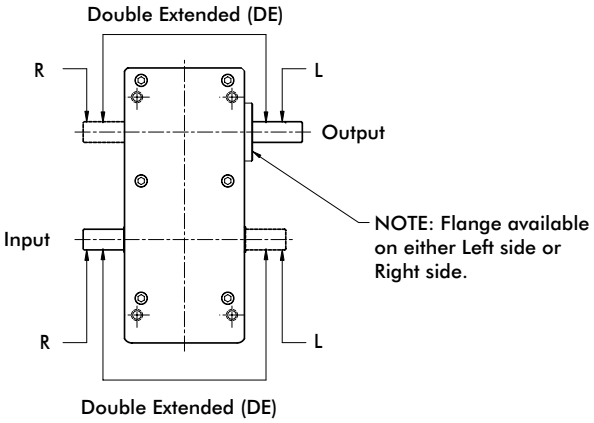

Input/Output Shaft Rotation

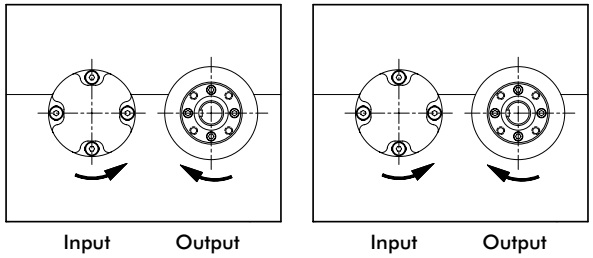

Parallel Shaft/Flange Drives | Indexer Mounting Position

OHEI (output horizontal, even with input)	OHEI (output horizontal, even with input)	OHOI (output horizontal, over input)	OHUI (output horizontal, under input)	VD (output vertical down)	VU (output vertical up)
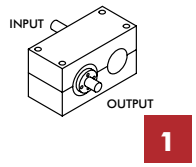 1	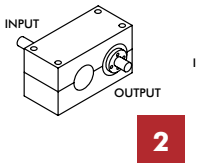 2	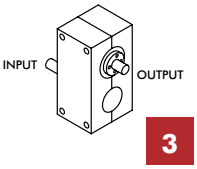 3	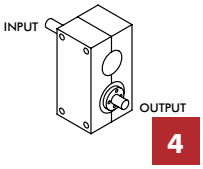 4	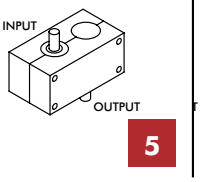 5	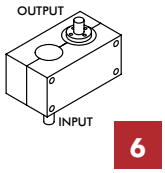 6

Gear Reducer Mounting Positions (Figure 4)

	Mounting "A"		Mounting "B"	
	RH	LH	RH	LH
SIDE R	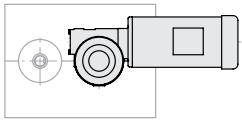 A	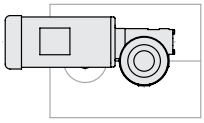 B	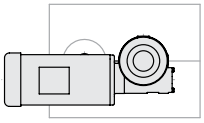 C	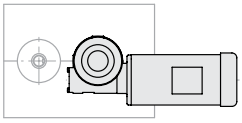 D
SIDE L	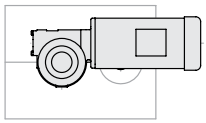 E	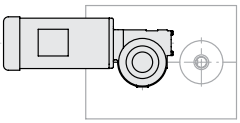 F	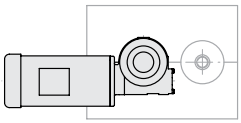 G	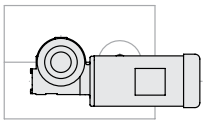 H

	Mounting "C"		Mounting "D"	
	RH	LH	RH	LH
SIDE R	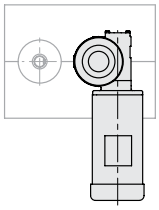 J	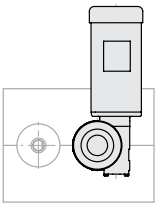 K	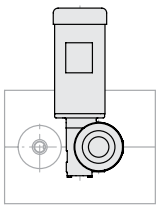 L	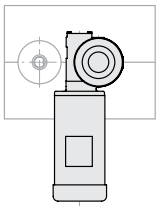 M
SIDE L	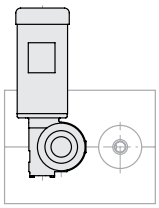 N	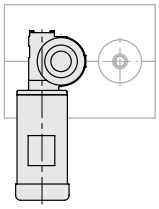 P	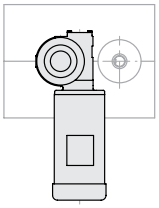 R	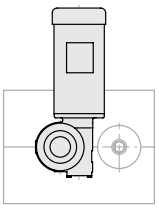 S

250P SERIES

Parallel Shaft/Flange Drives | Dimensions

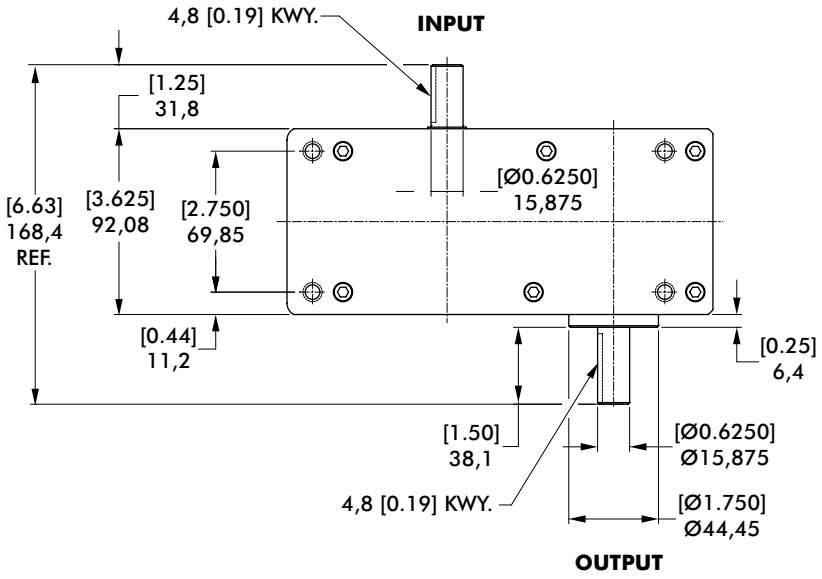

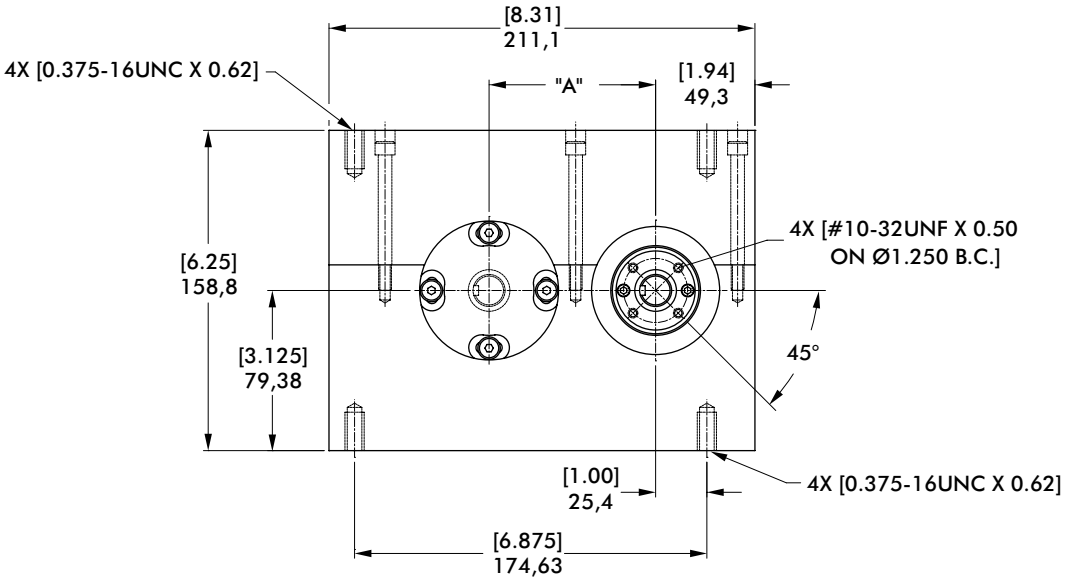

mm [INCH]

THIRD ANGLE PROJECTION

Dimensions and technical information are subject to change without notice

250P Indexer Capacities						
Stops	**Index Period**	**Motion**	**B_{10} Capacity at 50 RPM N-m [in-lb]**	**Internal Inertia kg-cm² [lb-in²]**	**Model**	**"A" Center mm [in]**
1	300	msc.50	50 [444]	8,8 [3]	250P1H20-300	82,6 [3.25]
1.5	270	msc.33	54 [481]	5,9 [2]	250P1.5H20-270	82,6 [3.25]
2	270	ms	49 [433]	8,8 [3]	250P2H20-270	82,6 [3.25]
	180	msc.33	62 [546]	8,8 [3]	250P2H20-180	82,6 [3.25]
3	270	ms	66 [582]	5,9 [2]	250P3H20-270	69,9 [2.75]
	120	ms	74 [653]	5,9 [2]	250P3H20-120	82,6 [3.25]
4	270	ms	65 [571]	8,8 [3]	250P4H20-270	69,9 [2.75]
	90	msc.25	88 [782]	8,8 [3]	250P4H20-90	82,6 [3.25]
6	270	ms	100 [888]	5,9 [2]	250P6H20-270 II	69,9 [2.75]
	180	msc.33	235 [2078]	8,8 [3]	250P6H24-180 II	69,9 [2.75]
8	270	ms	95 [843]	8,8 [3]	250P8H20-270 II	69,9 [2.75]
	120	ms	112 [993]	8,8 [3]	250P8H20-120 II	82,6 [3.25]

Other Motions (stops and index periods) available. Contact your DESTACO sales representative for more information.

Features

- Single Input Shaft and Single Output Shaft
- Output horizontal even with input Mounting
- R180 Reducer (ratios from 15:1 to 60:1)
  - Double Extended Worm (input) Shaft
  - Worm Shaft Handwheel
- 1/3 or 1 HP AC Drive Package with Inverter Duty Motor and Inverter Drive (up to 60 cpm)
- Single Cycle Cam and Limit Switch

Optional Accessories

- 1/3 hp DC motor
- Varipak DC Motor Control (up to 30 cpm)
- R225 Reducer (ratios from 10:1 to 60:1)
  - 1 hp AC or DC drive package
  - 56C Motor Adapter and Coupling
- Output Overload Clutch Models: .39F, .39FC, .39S and .39C, .39C-SD, .39FC-SD, .39S-SD
  - Available Settings (in-lb): 160, 210, 270, 320, 390
- Dual Cycle Cam and Limit Switch
- Oscillating motion
- Double Input Shaft
- Double Output Shaft
- Output and Input Vertical Mounting

Output Load Capacity (loads carried during index):

Radial	1406 N [316 lbs]
Thrust/Axial	1397 N [314 lbs]
Moment	45 N-m [395 in-lb]

Accuracy ±77 arcsec / ±0,028 mm [±.0011 in] at 76,2 mm [3 in] Radius

Repeatability ±19 arcsec / ±0,008 mm [±.0003 in] at 76,2 mm [3 in] Radius

387P SERIES

Parallel Shaft/Flange Drives | Dimensions

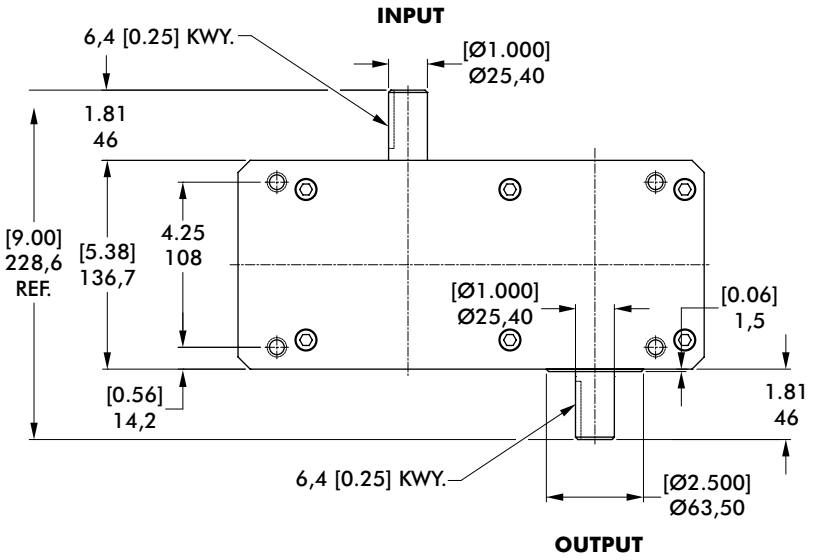

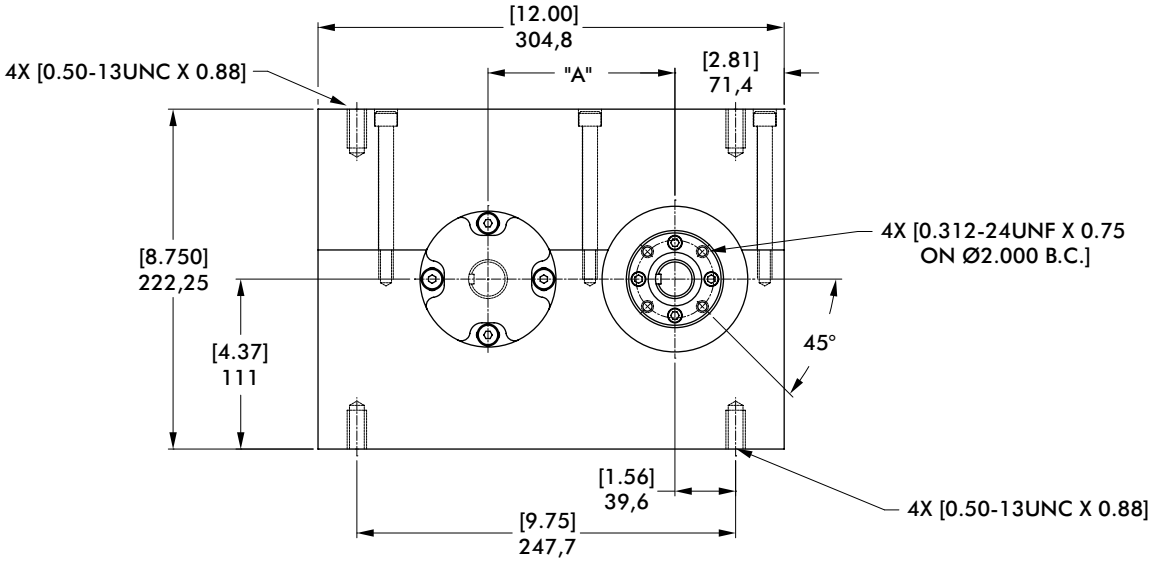

mm [INCH]

THIRD ANGLE PROJECTION

Dimensions and technical information are subject to change without notice

387P Indexer Capacities						
Stops	**Index Period**	**Motion**	**B_{10} Capacity at 50 RPM N-m [in-lb]**	**Internal Inertia kg-cm² [lb-in²]**	**Model**	**"A" Center mm [in]**
1	300	msc.66	156 [1385]	41,0 [14]	387P1H28-300	122,22 [4.812]
1.33	315	msc.10	120 [1062]	38,0 [13]	387P1.33H28-315	122,22 [4.812]
1.5	300	ms	124 [1099]	38,0 [13]	387P1.5H28-300	122,22 [4.812]
2	270	msc.33	202 [1788]	41,0 [14]	387P2H32-270	122,22 [4.812]
	180	msc.33	237 [2095]	41,0 [14]	387P2H32-180	122,22 [4.812]
2.67	270	msc.33	245 [2171]	41,0 [14]	387P2.67H28-270 II	122,22 [4.812]
3	270	ms	181 [1601]	38,0 [13]	387P3H28-270	101,60 [4.000]
	120	msc.33	234 [2067]	41,0 [14]	387P3H28-120	122,22 [4.812]
4	270	ms	181 [1605]	41,0 [14]	387P4H28-270	101,60 [4.000]
	90	msc.33	250 [2214]	41,0 [14]	387P4H28-90	122,22 [4.812]
6	270	ms	276 [2445]	38,0 [13]	387P6H28-270 II	101,60 [4.000]
	180	ms	278 [2463]	38,0 [13]	387P6H28-180 II	122,22 [4.812]
8	270	ms	269 [2378]	41,0 [14]	387P8H28-270 II	101,60 [4.000]

Other Motions (stops and index periods) available. Contact your DESTACO sales representative for more information.

Features

- Single Input Shaft and Single Output Shaft
- Output horizontal even with input Mounting
- R225 Reducer (ratios from 10:1 to 60:1)
  – 56C Motor Adapter and Coupling
- 1 HP AC Drive Package with Inverter Duty Motor and Inverter Drive (up to 60 cpm)
- Single Cycle Cam and Limit Switch

Optional Accessories

- 1 hp DC motor
- Varipak DC Motor Control (up to 30 cpm)
- R260 Reducer (ratios from 5:1 to 60:1)
  – 1 hp AC or DC drive package
  – 56C Motor Adapter and Coupling
- Output Overload Clutch Models: 2.3F, 2.3FC, 2.3S and 2.3C, 2.3C-SD, 2.3FC-SD, 2.3S-SD
  – Available Settings (in-lb): 400, 600, 700, 850, 1000, 1300, 1800, 2000, 2300
- Dual Cycle Cam and Limit Switch
- Oscillating motion
- Double Input Shaft
- Double Output Shaft
- Output and Input Vertical Mounting

Output Load Capacity (loads carried during index):

Radial	3981 N [895 lbs]
Thrust/Axial	2567 N [577 lbs]
Moment	183 N-m [1620 in-lb]

Accuracy ±50 arcsec / ±0,018 mm [±.0007 in] at 76,2 mm [3 in] Radius

Repeatability ±12 arcsec / ±0,005 mm [±.0002 in] at 76,2 mm [3 in] Radius

512P SERIES

Parallel Shaft/Flange Drives | Dimensions

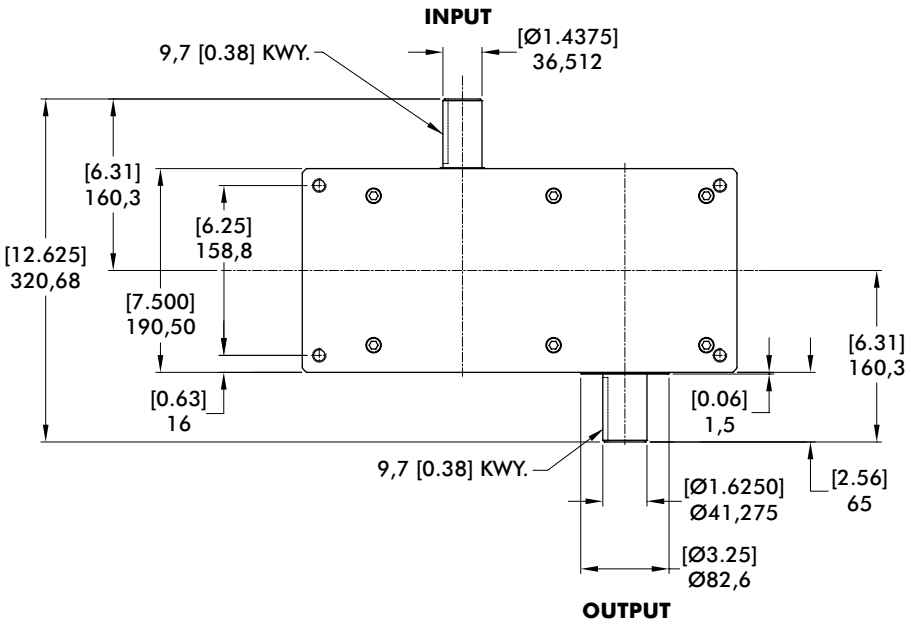

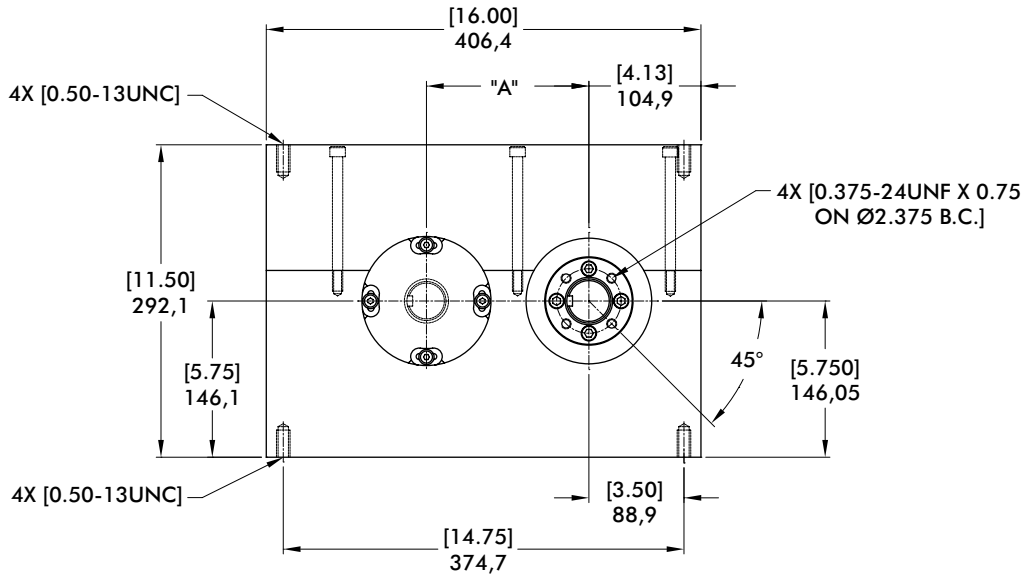

mm [INCH]

THIRD ANGLE PROJECTION

512P Indexer Capacities						
Stops	**Index Period**	**Motion**	**B_{10} Capacity at 50 RPM N-m [in-lb]**	**Internal Inertia kg-cm² [lb-in²]**	**Model**	**"A" Center mm [in]**
1	330	msc.75	728 [6441]	184,4 [63]	512P1H48-330	151,87 [5.979]
1.33	330	msc.33	557 [4928]	178,5 [61]	512P1.33H48-330	151,87 [5.979]
1.5	330	ms	549 [4860]	184,4 [63]	512P1.5H48-330	151,87 [5.979]
	270	msc.33	494 [4373]	178,5 [61]	512P2H40-270	151,87 [5.979]
2	180	msc.50	612 [5416]	178,5 [61]	512P2H40-180	151,87 [5.979]
	120	msc.50	467 [4131]	178,5 [61]	512P2H40-120	151,87 [5.979]
3	300	msc.33	804 [7116]	178,5 [61]	512P2.67H40-300 II	151,87 [5.979]
	180	ms	617 [5462]	163,9 [56]	512P3H40-180	151,87 [5.979]
4	270	ms	635 [5619]	178,5 [61]	512P4H40-270	123,39 [4.858]
	120	ms	706 [6252]	178,5 [61]	512P4H40-120	151,87 [5.979]
6	270	ms	939 [8315]	163,9 [56]	512P6H40-270 II	123,39 [4.858]
	180	ms	933 [8261]	163,9 [56]	512P6H40-180 II	151,87 [5.979]
8	270	ms	948 [8387]	178,5 [61]	512P8H40-270 II	123,39 [4.858]
	180	ms	892 [7894]	178,5 [61]	512P8H40-180 II	151,87 [5.979]

Other Motions (stops and index periods) available. Contact your DESTACO sales representative for more information.

Features

- Single Input Shaft and Single Output Shaft
- Output horizontal even with input Mounting
- R225 Reducer (ratios from 10:1 to 60:1)
  – 56C Motor Adapter and Coupling
- 1 HP AC Drive Package with Inverter Duty Motor and Inverter Drive (up to 60 cpm)
- Single Cycle Cam and Limit Switch

Output Load Capacity (loads carried during index):

Radial	12077 N [2715 lbs]
Thrust/Axial	6112 N [1374 lbs]
Moment	785 N-m [6951 in-lb]

Accuracy ±37 arcsec / ±0,013 mm [±.0005 in] at 76,2 mm [3 in] Radius

Repeatability ±9 arcsec / ±0,003 mm [±.0001 in] at 76,2 mm [3 in] Radius

Optional Accessories

- 1 hp DC motor
- Varipak DC Motor Control (up to 30 cpm)
- R260 Reducer (ratios from 5:1 to 60:1)
  – 1 hp AC or DC drive package
  – 56C Motor Adapter and Coupling
- Output Overload Clutch Models: 6.0F, 6.0FC, 6.0S and 6.0C, 6.0C-SD, 6.0FC-SD, 6.0S-SD
  – Available Settings (in-lb): 670, 825, 1100, 1400,1700, 2000, 2300, 2500, 3000, 3800, 4000, 5000, 6000
- Dual Cycle Cam and Limit Switch
- Oscillating motion
- Double Input Shaft
- Double Output Shaft
- Output and Input Vertical Mounting

662P SERIES

Parallel Shaft/Flange Drives | Dimensions

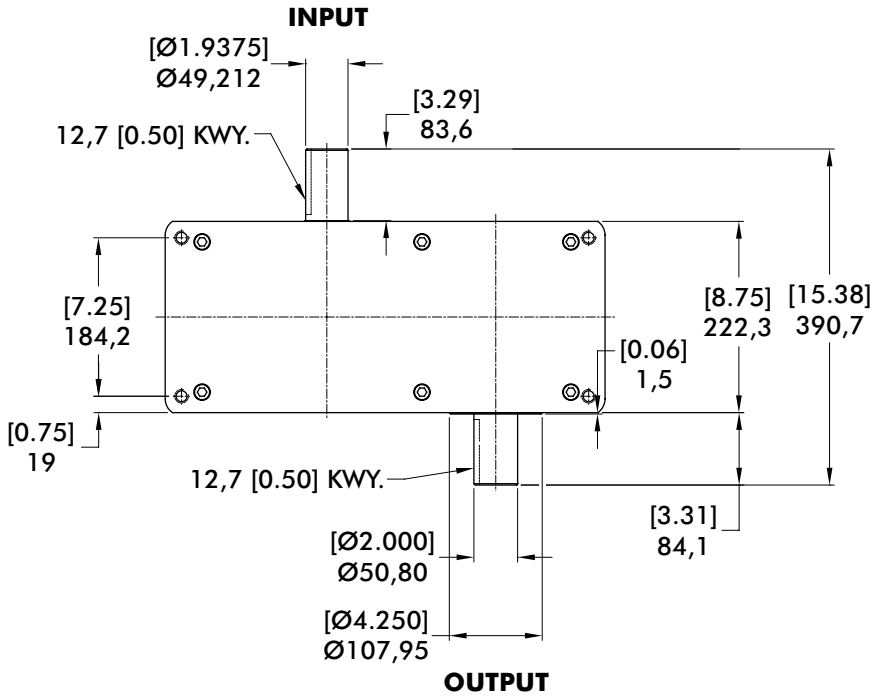

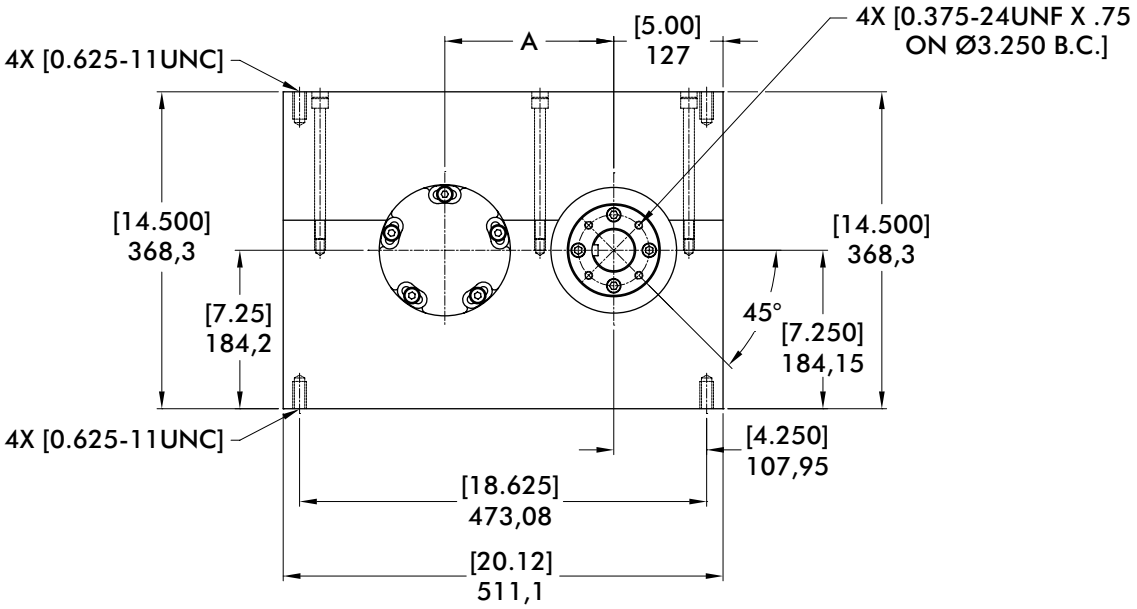

mm [INCH]

THIRD ANGLE PROJECTION

Dimensions and technical information are subject to change without notice

662P Indexer Capacities						
Stops	**Index Period**	**Motion**	**B_{10} Capacity at 50 RPM N-m [in-lb]**	**Internal Inertia kg-cm² [lb-in²]**	**Model**	**"A" Center mm [in]**
1	330	msc.50	658 [5824]	403,8 [138]	662P1H48-330	196,32 [7.729]
1.33	330	msc.20	1171 [10368]	971,6 [332]	662P1.33H64-330	196,32 [7.729]
1.5	270	msc.33	1425 [12617]	895,5 [306]	662P1.5H64-270	196,32 [7.729]
2	270	msc.33	770 [6811]	529,7 [181]	662P2H48-270	196,32 [7.729]
	180	msc.50	1329 [11760]	597,0 [204]	662P2H56-180	196,32 [7.729]
3	270	ms	954 [8446]	485,8 [166]	662P3H48-270	168,35 [6.628]
	180	ms	961 [8506]	485,8 [166	662P3H48-180	196,32 [7.729]
4	270	ms	989 [8752]	529,7 [181]	662P4H48-270	168,35 [6.628]
	120	ms	1100 [9738]	529,7 [181]	662P4H48-120	196,32 [7.729]
6	270	ms	1463 [12946]	485,8 [166]	662P6H48-270 II	168,35 [6.628]
	180	ms	1453 [12863]	485,8 [166]	662P6H48-180 II	196,32 [7.729]
8	270	ms	1476 [13060]	529,7 [181]	662P8H48-270 II	168,35 [6.628]
	120	msc.33	1783 [15780]	529,7 [181]	662P8H48-120	196,32 [7.729]

Other Motions (stops and index periods) available. Contact your DESTACO sales representative for more information.

Features

- Single Input Shaft and Single Output Shaft
- Output horizontal even with input Mounting
- R225 Reducer (ratios from 10:1 to 60:1)
  – 56C Motor Adapter and Coupling
- 1 HP AC Drive Package with Inverter Duty Motor and Inverter Drive (up to 60 cpm)
- Single Cycle Cam and Limit Switch

Optional Accessories

- 7350C or 7400C Reducer (ratios from 5:1 to 60:1) with Motor Adapter and Coupling
- 1 hp DC Motor
- Output Overload Clutch Models: 11F, 11FC, 11FC-SD
  – Available Settings (in-lb): 2300, 4000, 6000, 8500, 11000
- Dual Cycle Cam and Limit Switch
- Electric Clutch-Brake
- Air Clutch-Brake
- Oscillating motion
- Double Input Shaft
- Double Output Shaft
- Output and Input Vertical Mounting

Output Load Capacity (loads carried during index):

Radial	17415 N [3915 lbs]
Thrust/Axial	9083 N [2042 lbs]
Moment	1464 N-m [12959 in-lb]

Accuracy ±36 arcsec / ±0,025 mm [±.001 in] at 76,2 mm [3 in] Radius

Repeatability ±9 arcsec / ±0,008 mm [±.0003 in] at 152,4 mm [6 in] Radius

PRECISION INDEXING SOLUTIONS

Table of Contents

INDEXERS

Servo Positioners



GTB Series
Globoidal (Roller Gear)
Servo Positioner.....IN-SRV-1



RSD Series
Rotary Servo Drives.....IN-SRV-39

Mechanical Indexers



RDM Series
Rotary Index Drive IN-MCH-2



RD Series
Roller Dial Index Drive..... IN-MCH-18



E Series
Heavy-Duty Index Drive IN-MCH-30



RA Series
Right Angle Index Drive IN-MCH-42



RGD/RGS Series
Roller Gear Index Drive IN-MCH-52



P Series
Parallel Shaft/Flange Drive.... IN-MCH-72



RNG Series
Ring Drive Dial Indexer.....IN-MCH-84

OVERLOAD CLUTCHES



Overload Clutches
Output Overload..... IN-CLU-1

CUSTOM CAMS



Custom Cams
Cam Design Solutions IN-CAM-1

CONVEYORS



Rite-Link Series
Thin-Profile.....IN-CNV-1



Precision Link Series
Table-Top IN-CNV-4



Precision Link Series
Heavy-Duty IN-CNV-16

PARTS HANDLERS



LPP Series
Linear Part Handlers IN-PRT-2



RPP Series
Rotary Part Handlers IN-PRT-8

Dimensions and technical information are subject to change without notice

RING DRIVE DIAL INDEXER

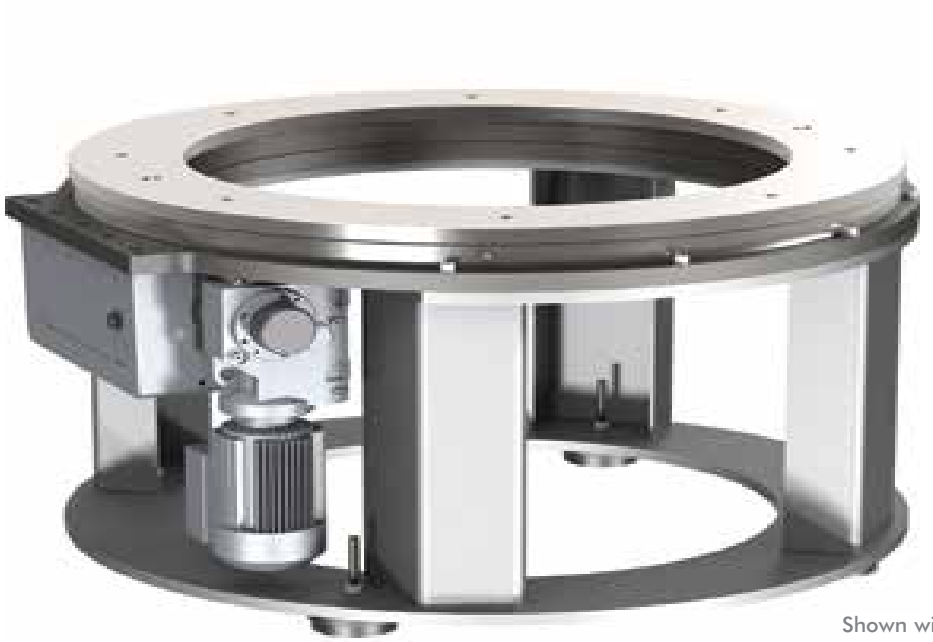

Shown with optional base

Work from Within

The **CAMCO Ring Drive** offers easy-to-integrate automation that fits easily into your operations.

Minimize machine footprint: Mount your equipment inside the through-hole of the CAMCO Ring Drive.

Easily tool the ring drive: Attach fixtures directly to the dial ring,eliminating the need for an additional dial plate.

Best technical support and service: Worldwide access to our global network.

Applications

Printing and decorating machines

Rotary automatic assembly machines

Ideal for assembly systems requiring a large number of tooling stations

The Ring Drive can replace a small conveyor

Table of Contents

How to Order 3

750RNG 5

1100RNG 7

1550RNG 9

Licensed under U.S. Patent No. 5,950,503

RNG SERIES

Ring Drive Dial Indexer | Features and Benefits | How to Order

Base Model	Description
750RNG	w/ KH37 reducer & 1 HP AC motor (220/440V)
1100RNG	w/ KH37 reducer & 1 HP AC motor (220/440V)
1550RNG	w/ KH37 reducer & 1-1/2 HP AC motor (220/440V)

Control	Description
1	1 HP 120V 750RNG & 1100RNG only
2	1 HP 240V 750RNG & 1100RNG only
3	1 HP 440V 750RNG & 1100RNG only
4	2 HP 240V 1550RNG only
5	2 HP 440V 1550RNG only



Motion	Stops	Index
A	6	330
B	8	330
C	12	330
D	16	330

Index Mounting (See Figure 1)

1

Reducer Ratio

	750RNG	1100RNG	1550RNG
A	15.31	29.96	39.61
B	20.91	37.97	49.95
C	24.99	49.79	63.30
D	29.96	58.60	69.84
E	37.97	67.80	75.20
F	49.79	72.54	85.12
G	58.60	83.69	90.86

Reducer Mounting (See Figure 3)

A

B

Signal Switch

M Mechanical

P Proximity

Example: MS or PS

Note about signal switch options:

a) Mechanical is a single switch with cam.

b) Proximity option is a mounting bracket for 8 or 12 mm proximity switch. A proximity switch will not be supplied. Cam supplied as target.

Signal Switch Side (See Figure 2)

S Shaft

Other Motions (stops and index periods) available. Contact your DESTACO sales representative for more information.

Ring Drive Features

Great Design Flexibility

Available in three sizes (Ø): .75 m [29.53 in], 1.1 m [43.31 in] and 1.6 m [62.99 in]

Complete motorized drive package with reducer and AC inverter drive to suit most applications

Dial Ring can be removed for machining to mounting your tooling and fixtures.

Large center through-hole to accommodate auxiliary equipment

60 station capability, ideal for multiple part automatic assembly machines

Steel Dial Ring or optional Aluminum Ring

Broad range of motions/drive packages

Robust And Reliable

Superior accuracy, similar to a precision link conveyor - your work station is located over the cam for maximum accuracy.

High precision, hardened cams available in standard and special motions

Sealed 4-point contact output bearing and large cam followers for superior accuracy and load capability (models 750RNG, 1100RNG and 1550RNG)

Modular shaft-mounted reducers for application flexibility and easy maintenance

Access to cam followers for easy inspection and replacement

Tapered roller bearings on camshaft

Dimensions and technical information are subject to change without notice

Input Shaft Configuration/Rotations (Figure 1)

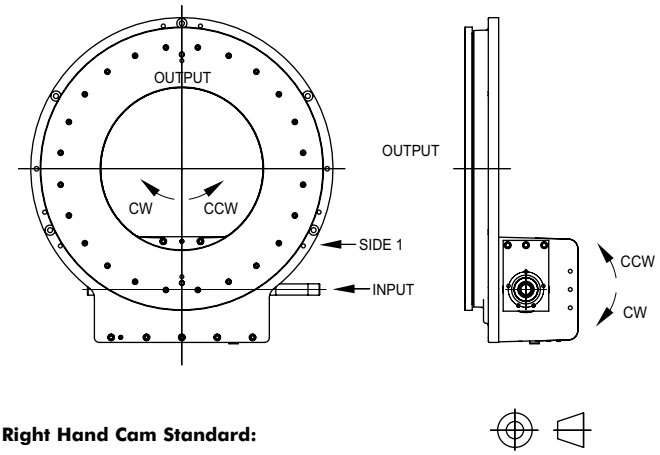

Right Hand Cam Standard:

CW Input Side 1, CCW Output
CCW Input Side 1, CW Output

NOTE: Input can be driven in either direction

Signal Switch Mounting Position (Figure 2)

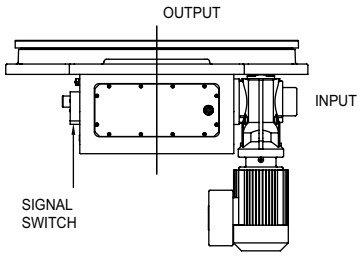

Gear Reducer Mounting Positions (Figure 3)

MOUNTING "A"

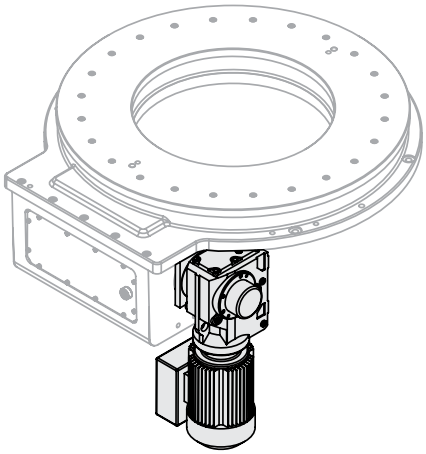

MOUNTING "B"

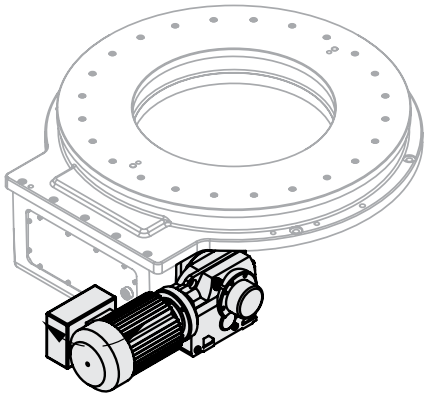

750RNG SERIES

Ring Drive Dial Indexer | Dimensions

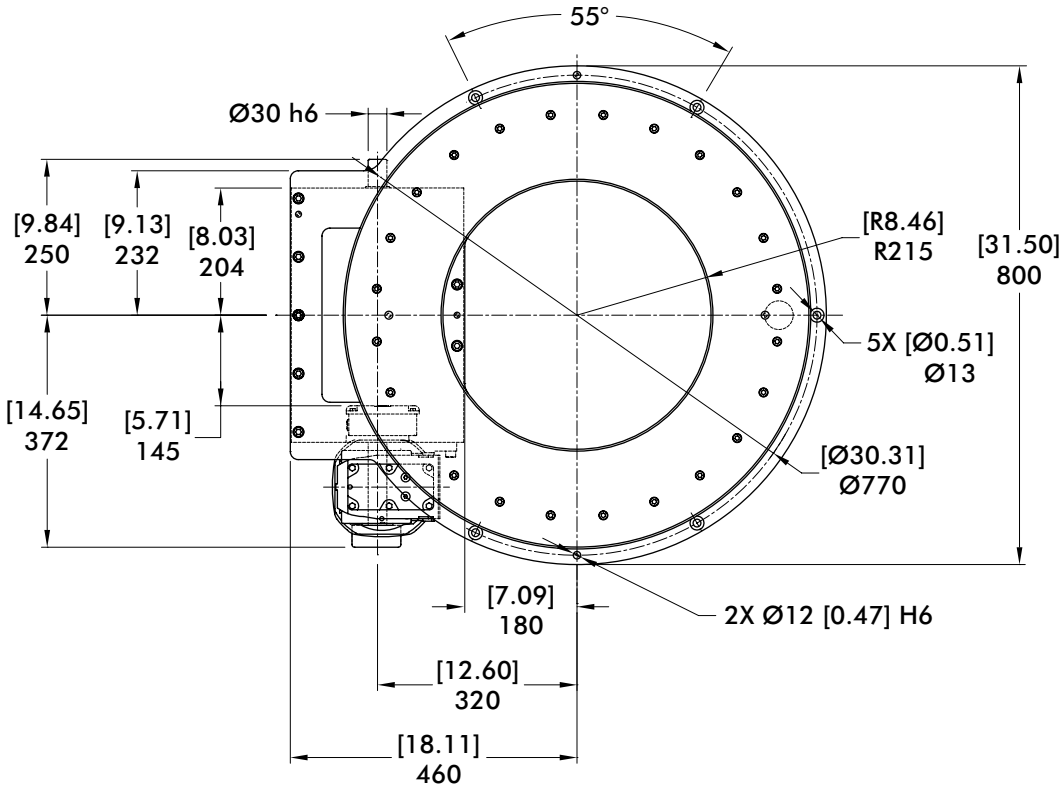

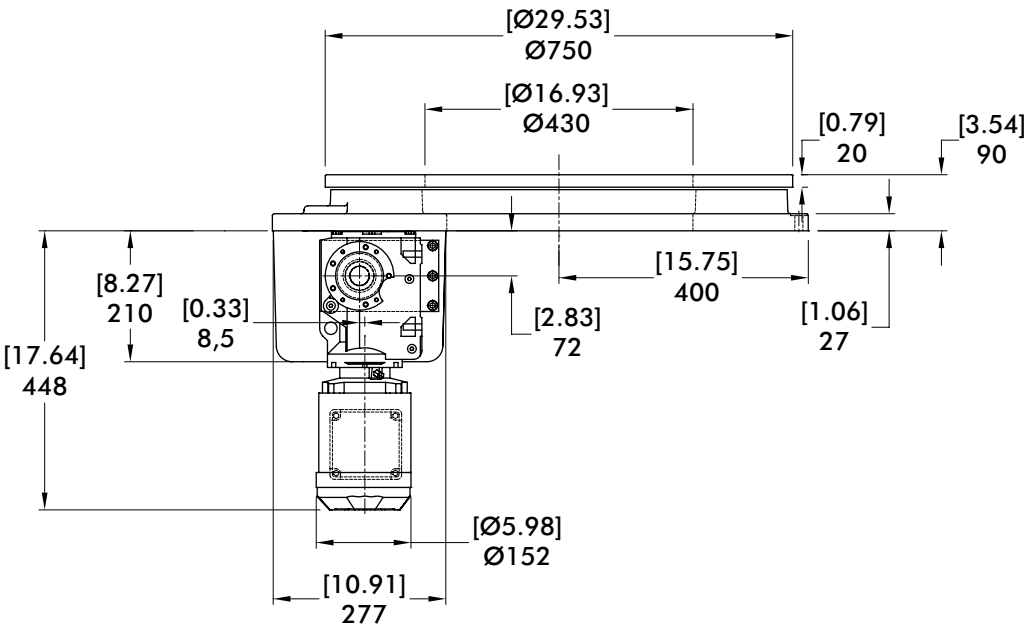

mm [INCH]

THIRD ANGLE PROJECTION

Dimensions and technical information are subject to change without notice

Maximum Inertia x 1000 kg-cm² [lb-in²] for standard package							
Stops	Motion Time [seconds]						
	0.468	0.617	0.764	0.915	1.160	1.521	1.791
6	0 [0]	50 [17]	170 [58]	363 [124]	855 [292]	1653 [565]	2315 [791]
8	9 [3]	138 [47]	354 [121]	696 [238]	1571 [537]	2991 [1022]	4167 [1424]
12	105 [36]	392 [134]	878 [300]	1650 [564]	3620 [1237]	6813 [2328]	9461 [3233]
16	237 [81]	746 [255]	1610 [550]	2982 [1019]	6488 [2217]	12162 [4156]	16871 [5765]
Reducer Ratio							
	15.31	20.19	24.99	29.96	37.97	49.79	58.60

Features

- KH37 Reducer (Ratios from 15.31:1 to 58.6:1)
- 1 HP AC Drive Package with Inverter Duty Motor and IM-pAC AC Drive (up to 60 cpm)
- Double Extended Camshaft (Input Shaft)
- Center Thru Hole (Ø230 mm [Ø9.05 in])
- Cycle Cam and Limit Switch Mounted to Camshaft
- Right Hand Cam

Optional Accessories

- KH47 Reducer
- 2 HP AC Drive Package with Inverter Duty Motor and Commander SK AC Drive (up to 60 cpm)
- Dual Cam and Limit Switch
- Left Hand Cam
- AC brake Motor
- Aluminum dial ring
- Servo motor drive package with precision planetary reducer for applications requiring flexibility or fewer than 6 stations
- Custom dials & tooling plates
- Machined base (see pg. IN-MCH-84)

Output Bearing Capacity (loads carried during index):

Radial	25740 N [5580 lbs]
Axial	64020 N [14550 lbs]
Moment	6915 N-m [61200 in-lbs]

Accuracy ±60 arcsec / ±0,047 mm [±.0019 in] at 324 mm [12.75 in] Radius

Repeatability ±15 arcsec / ±0,012 mm [±.0005 in] at 324 mm [12.75 in] Radius

1100RNG SERIES

Ring Drive Dial Indexer | Dimensions

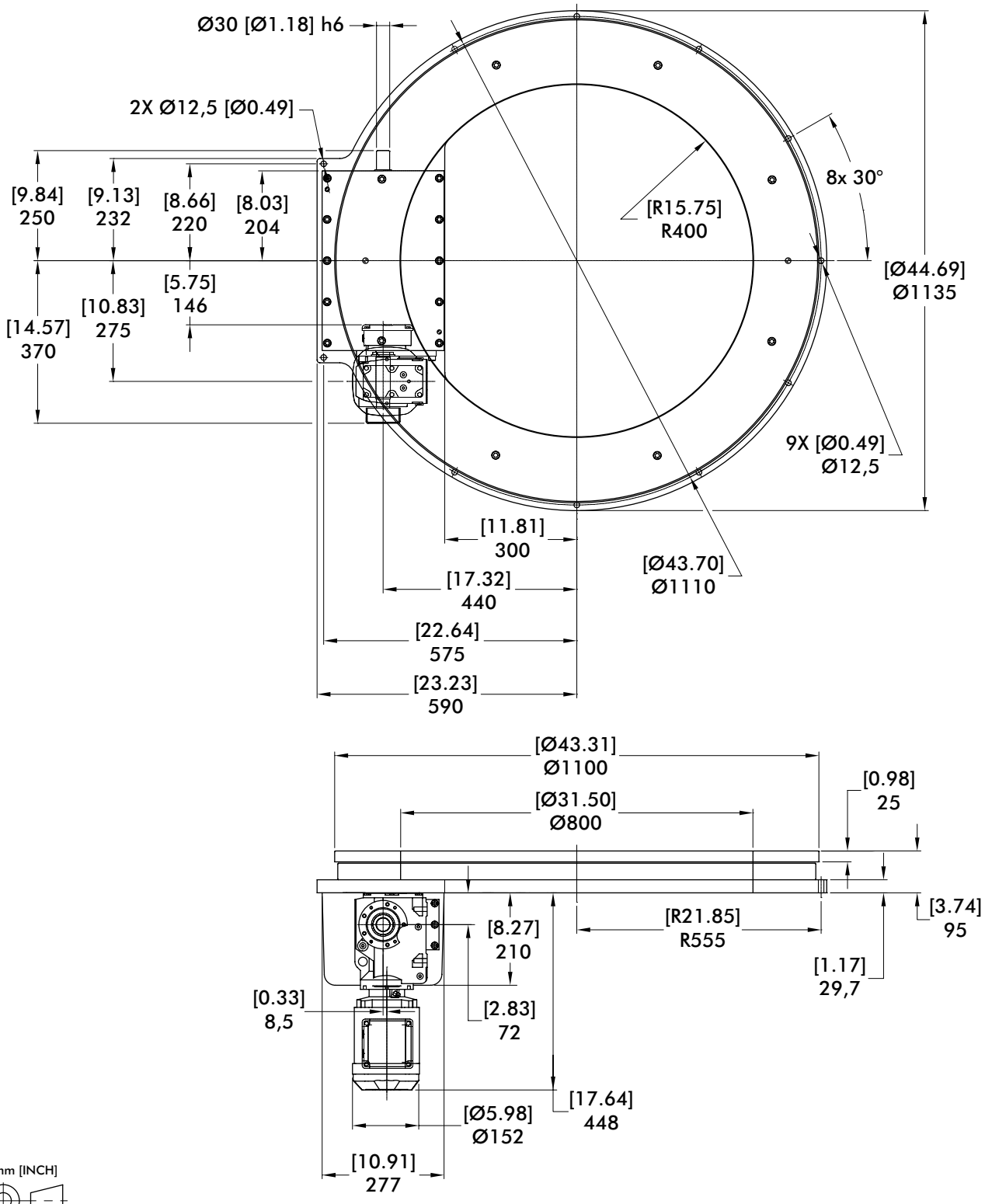

mm [INCH]

THIRD ANGLE PROJECTION

Dimensions and technical information are subject to change without notice

Maximum Inertia x 1000 kg-cm² [lb-in²] for standard package							
Stops	Motion Time [seconds]						
	0.915	1.359	1.521	1.791	2.072	2.217	2.557
6	164 [56]	1106 [378]	1454 [497]	2119 [724]	2923 [999]	3386 [1157]	4594 [1570]
8	497 [170]	2174 [743]	2792 [954]	3971 [1357]	5405 [1847]	6224 [2127]	8372 [2861]
12	1451 [496]	5221 [1784]	6614 [2260]	9262 [3165]	12490 [4268]	14336 [4899]	19168 [6550]
16	2783 [951]	9484 [3241]	11963 [4088]	16672 [5697]	22407 [7657]	25688 [8778]	34280 [11714]
Reducer Ratio							
	29.96	37.97	49.79	58.60	67.80	72.54	83.69

Features

- KH37 Reducer (Ratios from 29.96:1 to 83.69:1)
- 1 HP AC Drive Package with Inverter Duty Motor and IM-pAC AC Drive (up to 60 cpm)
- Double Extended Camshaft (Input Shaft)
- Center Thru Hole (Ø800 mm [Ø31.50 in])
- Cycle Cam and Limit Switch Mounted to Camshaft
- Right Hand Cam

Optional Accessories

- KH47 Reducer
- 2 HP AC Drive Package with Inverter Duty Motor and Commander SK AC Drive (up to 60 cpm)
- Dual Cam and Limit Switch
- Left Hand Cam
- AC brake Motor
- Aluminum dial ring
- Servo motor drive package with precision planetary reducer for applications requiring flexibility or fewer than 6 stations
- Custom dials & tooling plates
- Machined base (see pg. IN-MCH-84)

Output Bearing Capacity (loads carried during index):

Radial	159940 N [36350 lbs]
Axial	72829 N [16552 lbs]
Moment	16879 N-m [149376 in-lbs]

Accuracy ±35 arcsec / ±0,038 mm [±.0015 in] at 448 mm [17.65 in] Radius

Repeatability ±9 arcsec / ±0,010 mm [±.0004 in] at 448 mm [17.65 in] Radius

1550RNG SERIES

Ring Drive Dial Indexer | Dimensions

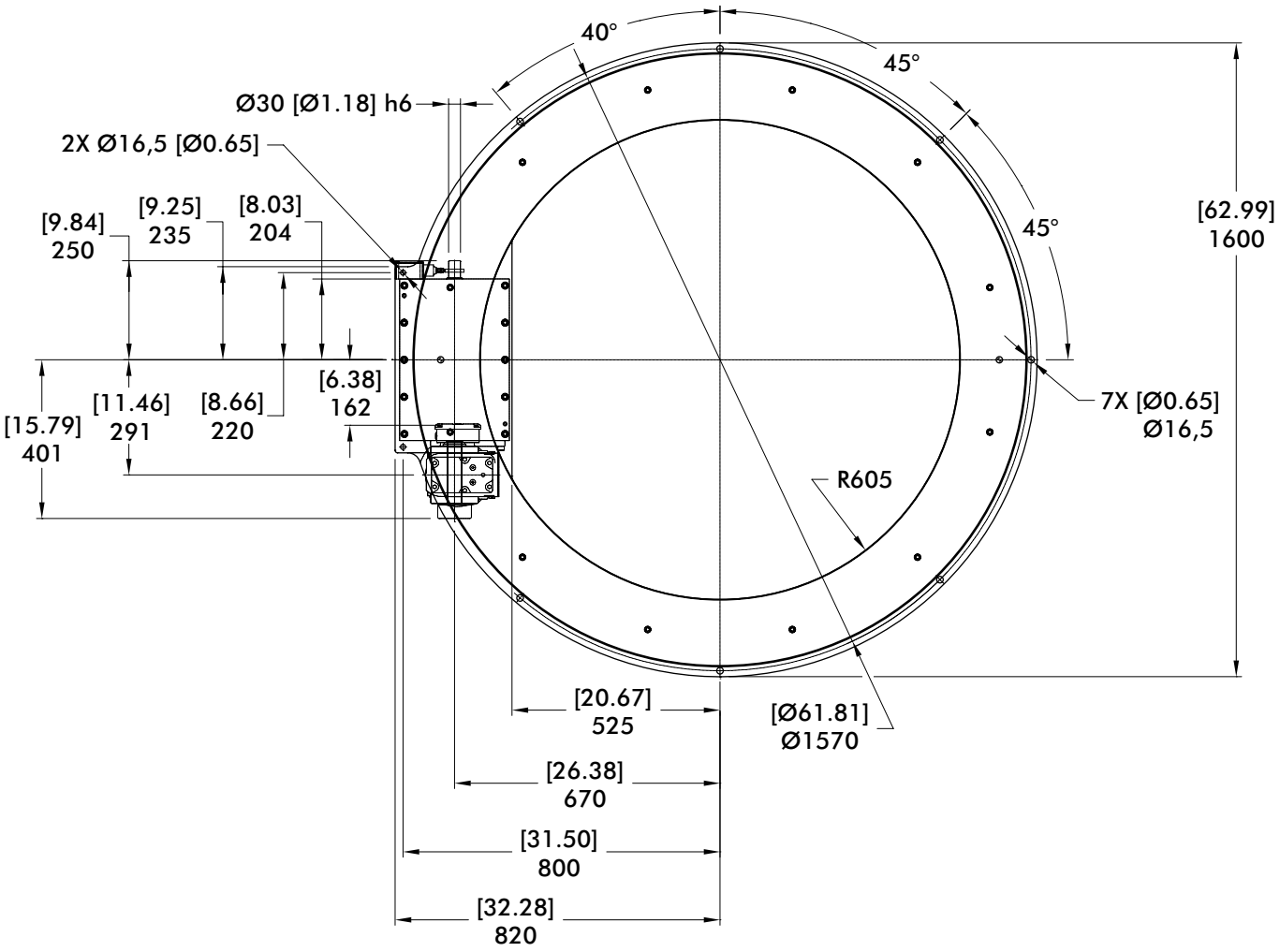

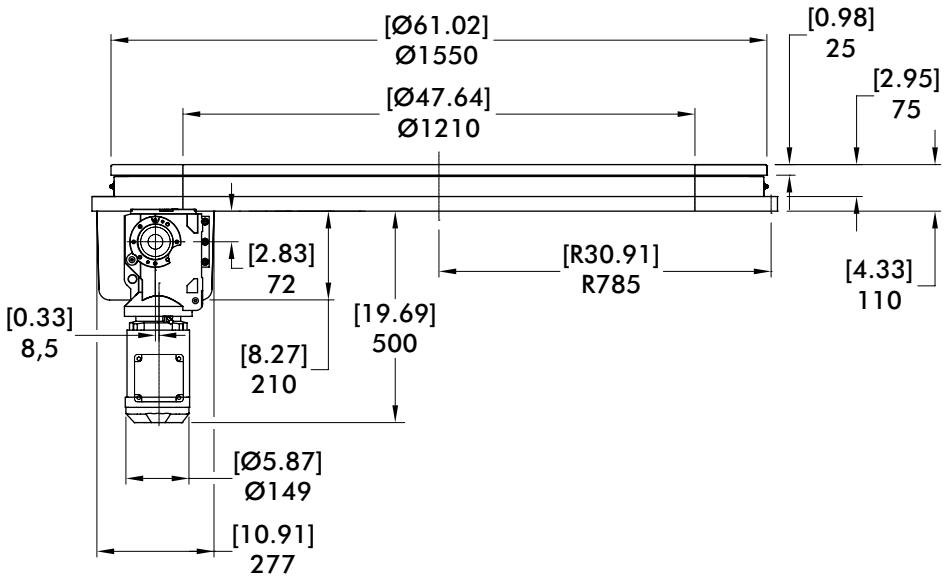

mm [INCH]

THIRD ANGLE PROJECTION

Dimensions and technical information are subject to change without notice

Maximum Inertia x 1000 kg-cm² [lb-in²] for standard package							
Stops	Motion Time [seconds]						
	1.210	1.496	1.934	2.134	2.298	2.601	2.776
6	679 [232]	2242 [766]	5063 [1730]	6380 [2180]	7556 [2582]	9964 [3405]	11495 [3928]
8	1984 [678]	4764 [1628]	9780 [3342]	12121 [4142]	14214 [4857]	18495 [6320]	21211 [7248]
12	5718 [1954]	11972 [4091]	23253 [7946]	28527 [9748]	33232 [11356]	42863 [14647]	48979 [16737]
16	10954 [3743]	22071 [7542]	42125 [14395]	51499 [17598]	59868 [20458]	76985 [26307]	87859 [30023]
	Reducer Ratio						
	39.61	48.95	63.30	69.84	75.20	85.12	90.86

Features

- KH47 Reducer (Ratios from 39.61:1 to 90.866:1)
- 2 HP AC Drive Package with Inverter Duty Motor and IM-pAC AC Drive (up to 60 cpm)
- Double Extended Camshaft (Input Shaft)
- Center Thru Hole (Ø1210 mm [Ø47.64 in])
- Cycle Cam and Limit Switch Mounted to Camshaft
- Right Hand Cam

Optional Accessories

- Dual Cam and Limit Switch
- Left Hand Cam
- AC brake Motor
- Aluminum dial ring
- Servo motor drive package with precision planetary reducer for applications requiring flexibility or fewer than 6 stations
- Custom dials & tooling plates
- Machined base (see pg. IN-MCH-84)

Output Bearing Capacity (loads carried during index):

Radial	239052 N [54330 lbs]
Axial	76635 N [17417 lbs]
Moment	25720 N-m [227622 in-lbs]

Accuracy ±25 arcsec / ±0,039 mm [±.0015 in] at 648 mm [25.51 in] Radius

Repeatability ±6 arcsec / ±0,010 mm [±.0004 in] at 648 mm [25.51 in] Radius

PRECISION INDEXING SOLUTIONS

Table of Contents

INDEXERS

Servo Positioners



GTB Series
Globoidal (Roller Gear)
Servo Positioner.....IN-SRV-1



RSD Series
Rotary Servo Drives.....IN-SRV-39

Mechanical Indexers



RDM Series
Rotary Index Drive IN-MCH-2



RD Series
Roller Dial Index Drive..... IN-MCH-18



E Series
Heavy-Duty Index Drive IN-MCH-30



RA Series
Right Angle Index Drive IN-MCH-42



RGD/RGS Series
Roller Gear Index Drive IN-MCH-52



P Series
Parallel Shaft/Flange Drive.... IN-MCH-72



RNG Series
Ring Drive Dial Indexer.....IN-MCH-84

OVERLOAD CLUTCHES



Overload Clutches
Output Overload..... IN-CLU-1

CUSTOM CAMS



Custom Cams
Cam Design Solutions IN-CAM-1

CONVEYORS



Rite-Link Series
Thin-Profile.....IN-CNV-1



Precision Link Series
Table-Top IN-CNV-4



Precision Link Series
Heavy-Duty IN-CNV-16

PARTS HANDLERS



LPP Series
Linear Part Handlers IN-PRT-2



RPP Series
Rotary Part Handlers IN-PRT-8

Dimensions and technical information are subject to change without notice

OVERLOAD CLUTCHES



Features:

CAMCO Output Overload Clutches are designed to protect your indexing equipment from costly downtime due to overload or jam conditions by quickly disengaging the drive system.

Easily Mounted to CAMCO index drives

Single Position reset to maintain accuracy and machine timing

Precision hardened and ground plungers and drive plate

Overload Detector plate provides actuation for overload detector switch

Variety of Models for all applications

Standard & custom torque settings

Table of Contents

Overview 3
D 5
F 6
S 7
F 8
C 9
S-SD 10
FC-SD 11
C-SD 12

OVERLOAD CLUTCHES

Mounting Overview

CAMCO Output Overload Clutches quickly disengage the drive system in overload or jam conditions, protecting indexers from costly downtime. A variety of models are available in standard and custom torque settings. An overload detector plate provides actuation for the overload detector switch, and the clutch's single-position reset function maintains accuracy and machine timing.

- Standard and custom torque settings
- Single-position reset maintains timing, accuracy
- Range of models for allapplications
- Rigid, backlash-free design



Indexer Type	Clutch Type
RDM **RD**	**D** (Flange Mounted Body)
Roller Gear (RGS / RGD) **Parallel (P)** **Right Angle (RA)**	**F** (Flange to Flange)
	FC (Flange to Shaft)
	FC-SD (Flange to Shaft, Shrink-Disk)
	S (Shaft to Flange)
	S-SD (Shaft to Flange, Shrink-Disk)
	C (Shaft to Shaft Mounting)
	C-SD (Shaft to Shaft, Shrink-Disk)

CAMCO Output Overload Clutches	
D Clutch: Flange-Mounted Body For CAMCO Index Drives with large dial mounting surfaces. The dial plate rests directly on the index drive output flange, providing stability and accuracy.	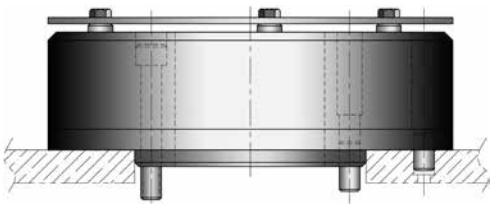

CAMCO Output Overload Clutches

F Clutch: Flange-Mounted Body

F clutches are designed to mount a dial/sprocket/flanged component to a shaft output CAMCO index drive. These clutches will flange mount to the output shaft, providing a rigid, compact, and accurate connection with the driven member.

F clutches may be mounted in two positions,"A" (right, top) or "B" (right, bottom). Mounting "B" provides greater rigidity and overhung loading and should be used whenever high loads are exerted on driven members.

A Mounting

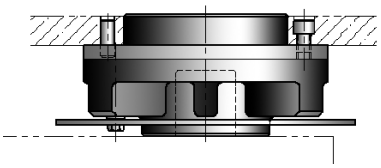

B Mounting

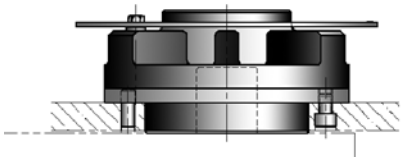

S & S-SD Clutch: Shaft to Flange

S clutches are designed to mount on CAMCO index drives without output flanges. The combination of key and clamped hub design provides a rigid and backlash-free connection.

S clutches may be mounted two positions, "A" or "B." Mounting "B" provides greater rigidity and overhung loading and should be used whenever high loads are exerted on driven members.

The S-SD clutch employs a shrink disk to connect to the shaft.

A Mounting

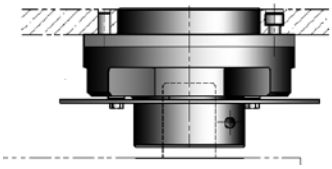

B Mounting

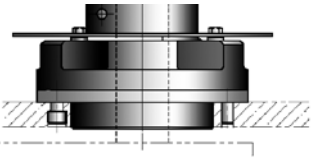

FC & FC-SD Clutch: Flange to Shaft

FC clutches are designed to mount on CAMCO index drives with flanged output shafts. These clutches will flange mount to the output shaft, providing a rigid, compact and accurate connection. The FC-SD clutch employs a shrink disk to connect to the shaft.

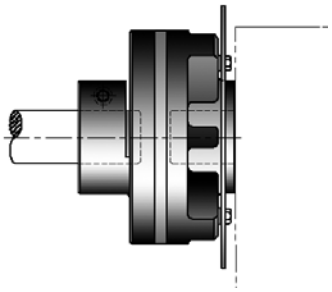

C Clutch: Shaft to Shaft

C clutches are designed to mount on CAMCO index drives without output flanges. These clutches are used whenever a positive connection is required between two shafts. The C-SD clutch employs shrink disks at both ends to connect to the shafts.

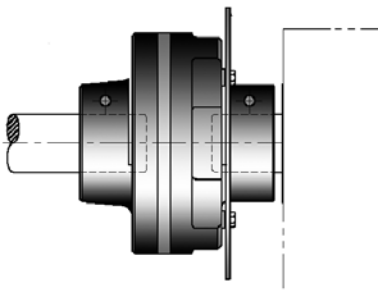

D TYPE FLANGE-MOUNTED BODY

Overload Clutches | Dimensions and Technical Information

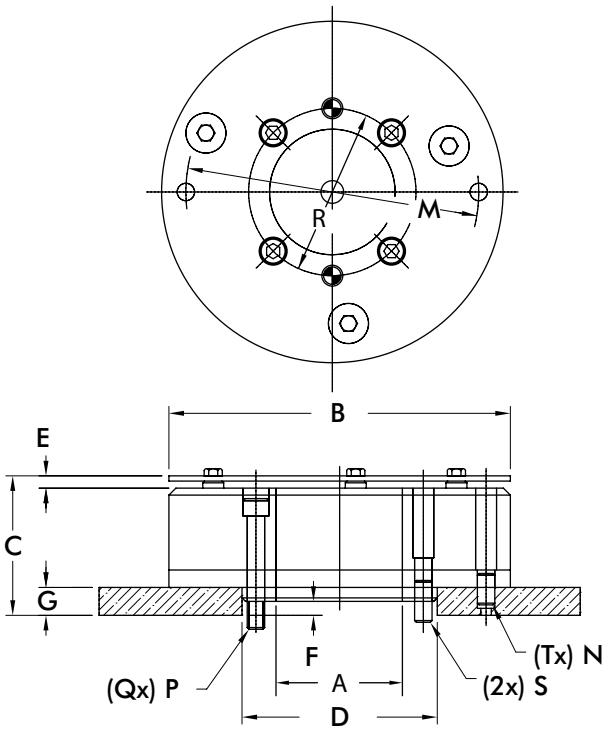

"D" Type clutches are designed to mount on CAMCO Index Drives with large dial mounting surfaces. The dial plate rests directly on the index drive output flange, providing stability and accuracy.

D Type Dimensions

Model	A	B	C	D	E	F	G	M	N	P	Q	R	S	T
2.8D	1.00	5.12	2.50	2.500	0.22	0.250	0.500	4.250	0.312	.312-18	4	2.00	0.31	2
4.0D	2.25	6.12	2.50	3.500	0.22	0.250	0.500	5.250	0.312	.312-18	4	3.00	0.31	2
7.8D	3.41	8.50	2.88	5.000	0.25	0.188	0.750	6.750	0.500	.500-20	4	4.25	0.50	2
18D	2.62	10.25	4.53	5.000	0.31	0.188	1.000	8.250	0.625	.500-20	4	4.25	0.50	2
31D	5.25	14.50	4.03	9.000	0.34	-	1.000	11.750	0.750	.500-20	6	8.25	0.50	4
32D	5.25	14.50	4.03	9.000	0.34	-	1.000	11.750	0.750	.500-13	6	8.25	0.50	4
33D (mm)	133	368	102	228.6	8.4***	-	25	298.5	20	M12	6	210	12	4
61D	7.25	18.38	5.40	11.000	0.34	-	1.250	16.000	0.750	.625-11	8	10.00	.625 (4)	4

* Dimension increases .06 during overload
** Dimension increases .09 during overload
*** Dimension increases .12 during overload

D Type Specifications

Model	Internal Inertia	Torque Setting	Index Drive
2.8D	29	400 480 700 850 1100 1300 1800 2200 3100	425RD
4.0D	69	420 620 750 1150 1750 2950 4000	601RDM
7.8D	266	1400 1700 2600 3200 4200 5000 7200 10000	902RDM 663RAD 900RAD
18D	743	5000 7000 7800 10,000 13000 15000 20000 25000	900RAD
31D	2910	8500 13000 20000 31000	1200RAD
32D	2910	8500 13000 20000 31000	1305RDM
33D	2910	8500 13000 20000 25500	1100RDM
61D	4900	23000 36000 44000 50000 60000	1800RDM

F TYPE SHAFT TO FLANGE MOUNTING

Overload Clutches | Dimensions and Technical Information

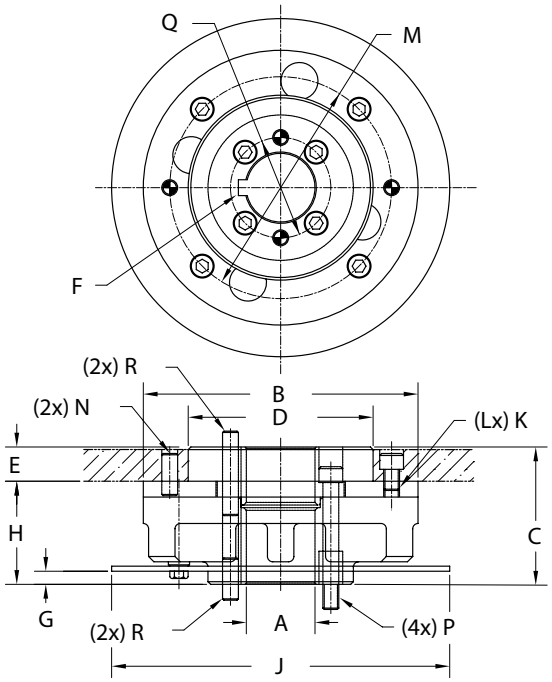

IMC "F" type clutches are designed to mount on IMC index drives. These clutches will flange mount to the output shaft, providing a rigid, compact, and accurate connection with the driven member.

F Type Dimensions

Model	A	B	C	D	E	F	G	H	J	K	L	M	N	P	Q	R
.39F	0.625	3.38	2.19	2.375	0.41	0.1875	.22†	1.78	4.75	10-32	4	2.875	0.25	10-32	1.25	0.25
2.3F	1.000*	5.12	2.78	3.5	0.56	0.25	.22†	2.22	6.5	5/16-24	4	4.25	0.312	5/16-24	2	0.31
6.0F	1.625	6.5	3.25	4.375	0.81	0.375	.31††	2.44	8	3/8-24	4	5.25	0.375	3/8-24	2.38	0.38
11F	2	8.5	3.72	5.75	0.81	0.5	.38††	2.91	10	3/8-24	4	6.75	0.5	3/8-24	3.25	0.5
25F	2.75	10.25	4.97	7.125	1.06	0.625	.38†††	3.91	12	1/2-13	6	8.25	0.625	1/2-20	4.25	0.63

* Also 1.250

† Dimension decreases .06 during overload
†† Dimension decreases .09 during overload
††† Dimension decreases .12 during overload
†††† Dimension decreases 1.5 mm during overload

F Type Specifications

Model	Internal Inertia	Torque Setting	Index Drive
.39F	5	160 210 270 320 390	250P
2.3F	32	400 600 700 850 1000 1300 1800 2000 230	387P 350RGS/RGD 400RA
6.0F	87	670 825 1100 1400 1700 2000 2300 2 500 3000 3800 4000 5000 6000	512P 512RA
11F	340	2300 4000 6000 8500 11000	662P 662RA
25F	842	5000 7000 10000 13000 15000 20000 25000	900P

S TYPE SHAFT TO FLANGE MOUNTING SERIES

Overload Clutches | Dimensions and Technical Information

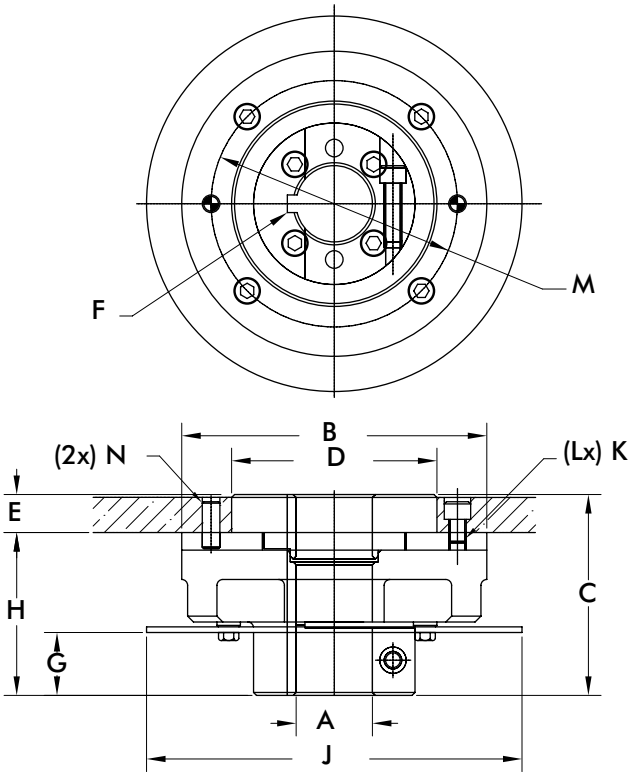

IMC "S" type clutches are designed to mount on CAMCO index drives without output flanges. The combination of key and clamped hub design provides a rigid and backlash-free connection.

S Type Dimensions

Model	A	B	C	D	E	F	G	H	J	K	L	M	N
.39S	0.6250	3.38	2.63	2.375	0.40	0.187	.66†	2.22	4.75	10-32	4	2.88	0.250
2.3S	1.0000**	5.12	3.31	3.500	0.56	0.250	.75†	2.75	6.50	5/16-24	4	4.25	0.312
6.0S	1.6250	6.50	4.28	4.375	0.81	0.375	1.34††	3.47	8.00	3/8-24	4	5.25	0.375
11S	2.0000	8.50	5.00	5.750	0.81	0.500	1.69††	4.19	10.00	3/8-24	4	6.75	0.500
25S	2.5000	10.25	6.25	7.125	1.06	0.625	1.66†††	5.19	12.00	1/2-13	6	8.25	0.625

* Dimensions in millimeters
** Also 1.2500

† Dimension decreases .06 during overload
†† Dimension decreases .09 during overload
††† Dimension decreases .12 during overload
†††† Dimension decreases 1.5 mm during overload

S Type Specifications

Model	Internal Inertia	Torque Setting	Index Drive
.39S	5	160 210 270 320 390	250P
2.3S	31	400 600 700 850 1000 1300 1800 2000 2300	387P 350RGS/RGD 400RA
6.0S	83	670 825 1100 1400 1700 2000 2300 2500 3000 3800 4000 5000 6000	512P 512RA
11S	320	2300 4000 6000 8500 11000	500RGD/RGS 662RA 662P
25S	803	5000 7000 10000 13000 15000 20000 25000	700RGS

FC TYPE FLANGE TO SHAFT MOUNTING SERIES

Overload Clutches | Dimensions and Technical Information

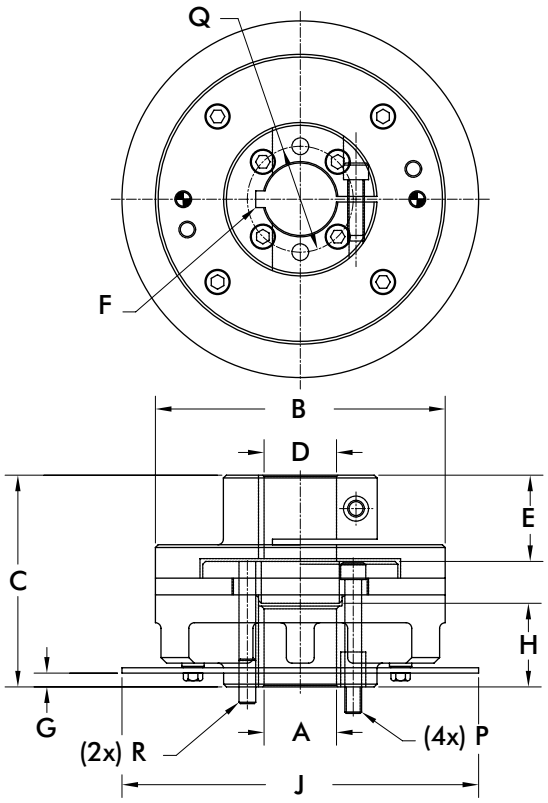

"FC" type clutches are designed to mount on CAMCO index drives. These clutches will flange mount to the output shaft, providing a rigid, compact and accurate connection.

FC Type Dimensions

Model	A	B	C	D	E	F	G	H	J	P	Q	R
.39FC	0.6250	3.38	3.03	0.625	1.06	0.187	.22†	1.41	4.75	10-32	1.25	0.25
2.3FC	1.0000**	5.12	3.81	1.000	1.28	0.250	.22†	1.75	6.50	5/16-24	2.00	0.31
6.0FC	1.6250	6.50	4.75	1.625	1.94	0.375	.31††	1.88	8.00	3/8-24	2.38	0.38
11FC	2.0000	8.50	5.72	2.000	2.38	0.500	.38††	2.25	10.00	3/8-24	3.25	0.38

* Dimensions in millimeters
** Also 1.2500

† Dimension decreases .06 during overload
†† Dimension decreases .09 during overload
††† Dimension decreases .12 during overload
†††† Dimension decreases 1.5 mm during overload

FC Type Specifications

Model	Internal Inertia	Torque Setting	Index Drive
.39FC	7	160 210 270 320 390	250P
2.3FC	43	400 600 700 850 1000 1300 1800 2000 2300	387P 350RGS/RGD 400RA
6.0FC	118	670 825 1100 1400 1700 2000 2300 2500 3000 3800 4000 5000 6000	512P 512RA
11FC	456	2300 4000 6000 8500 11000	662P 662RA

C TYPE SHAFT TO SHAFT MOUNTING SERIES

Overload Clutches | Dimensions and Technical Information

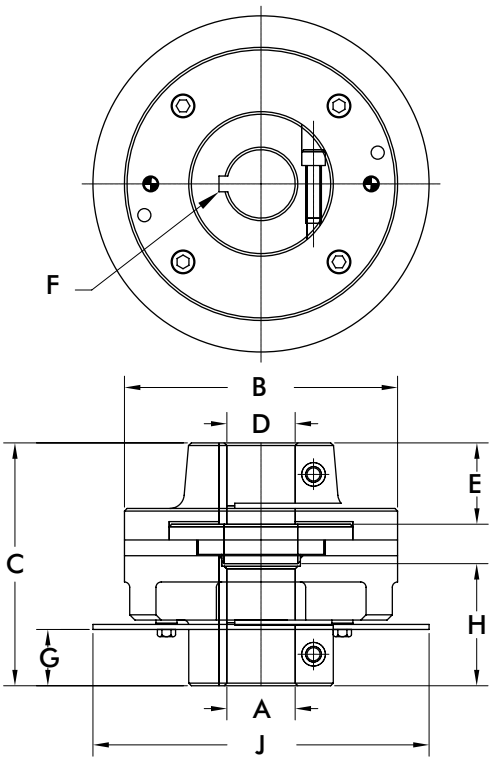

"C" type clutches are designed to mount on CAMCO index drives without output flanges. These clutches are used whenever a positive connection is required between two shafts.

C Type Dimensions

Model	A	B	C	D	E	F	G	H	J	P	Q	R
.39C	0.6250	3.38	3.03	0.625	1.06	0.187	.22†	1.41	4.75	10-32	1.25	0.25
2.3C	1.0000**	5.12	3.81	1.000	1.28	0.250	.22†	1.75	6.50	5/16-24	2.00	0.31
6.0C	1.6250	6.50	4.75	1.625	1.94	0.375	.31††	1.88	8.00	3/8-24	2.38	0.38
11C	2.0000	8.50	5.72	2.000	2.38	0.500	.38††	2.25	10.00	3/8-24	3.25	0.38

* Dimensions in millimeters
** Also 1.2500

† Dimension decreases .06 during overload
†† Dimension decreases .09 during overload
††† Dimension decreases .12 during overload
†††† Dimension decreases 1.5 mm during overload

C Type Specifications

Model	Internal Inertia	Torque Setting	Index Drive
.39C	7	160 210 270 320 390	250P
2.3C	44	400 600 700 850 1000 1300 1800 2000 2300	387P 350RGS/RGD 400RA
6.0C	122	670 825 1100 1400 1700 2000 2300 2500 3000 3800 4000 5000 6000	512P 512RA
11C	476	2300 4000 6000 8500 11000	500RGD/RGS 662P

S-SD TYPE SHAFT TO FLANGE, SHRINK-DISK MOUNTING SERIES

Overload Clutches | Dimensions and Technical Information

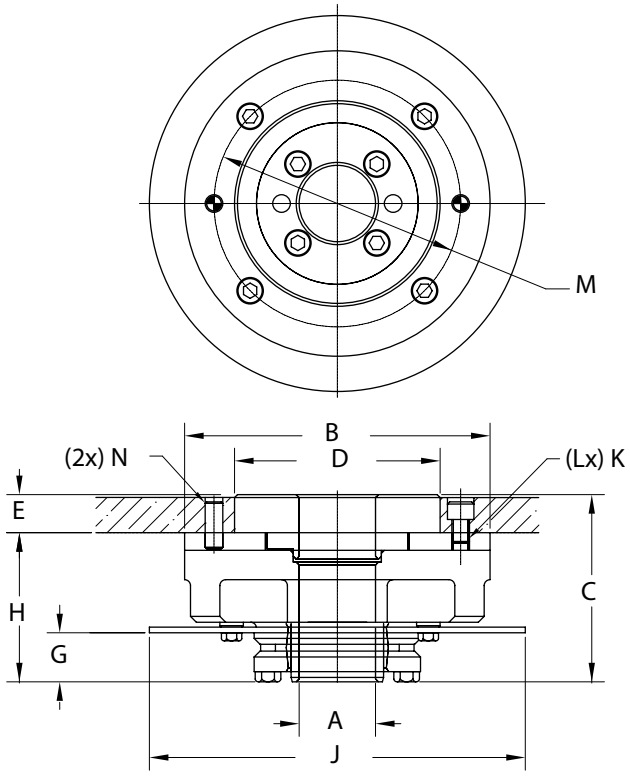

"S-SD" type clutches are designed to mount on CAMCO index drives without output flanges. The shrink disk design converts clamp loads from multiple high strength locking screws to radial gripping force through the use of circular wedges, providing the highest capacity mechanical interference connection available.

S-SD Type Dimensions

Model	A	B	C	D	E	F	G	H	J	K	L	N
.39-SD	0.6250	3.38	2.62	2.375	0.40	.66†	2.22	4.75	10-32	4	2.88	0.250
2.3-SD	1.0000	5.12	3.31	3.500	0.56	.75†	2.75	6.50	5/16-24	4	4.25	0.312
6.0-SD	1.6250	6.50	3.98	4.375	0.81	1.04††	3.17	8.00	3/8-24	4	5.25	0.375
11-SD	2.0000	8.50	4.38	5.750	0.82	1.06††	3.56	10.00	3/8-24	4	6.75	0.500

* Dimensions in millimeters

† Dimension decreases .06 during overload
†† Dimension decreases .09 during overload
††† Dimension decreases .12 during overload
†††† Dimension decreases 1.5 mm during overload

S-SD Type Specifications

Model	Internal Inertia	Torque Setting	Index Drive
.39-SD	5	160 210 270 320 390	250P
2.3-SD	32	400 600 700 850 1000 1300 1800 2000 2300	387P 350RGS/RGD 400RA
6.0-SD	87	670 825 1100 1400 1700 2000 2300 2500 3000 3800 4000 5000 6000	512P 512RA
11-SD	340	2300 4000 6000 8500 11000	500RGD/RGS 662P

FC-SD TYPE FLANGE TO SHAFT, SHRINK-DISK MOUNTING SERIES

Overload Clutches | Dimensions and Technical Information

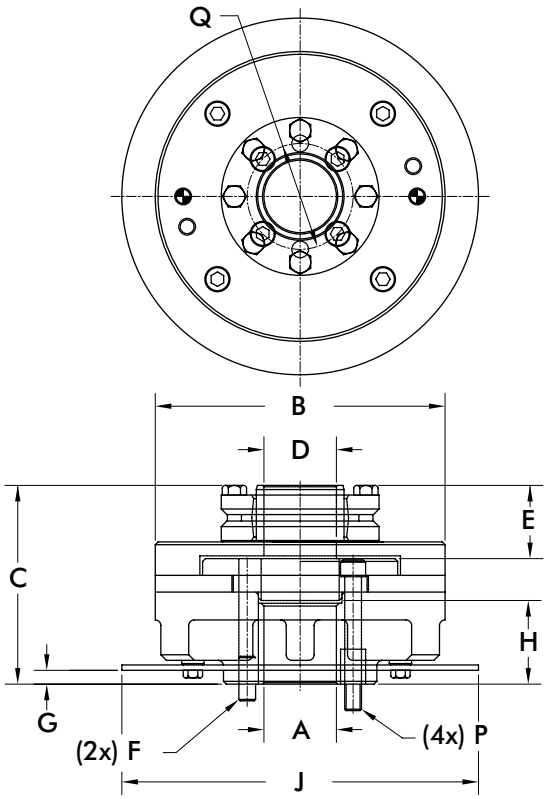

"FC-SD" type clutches are designed to mount on CAMCO index drives with output flanges. The shrink disk design converts clamp loads from multiple high strength locking screws to radial gripping force through the use of circular wedges, providing the highest capacity mechanical interference connection available.

FC-SD Type Dimensions

Model	A	B	C	D	E	F	G	H	J	P	Q
.39FC-SD	0.6250	3.38	3.00	0.625	1.03	0.25	.22†	1.41	4.75	10-32	1.25
2.3FC-SD	1.0000	5.12	3.81	1.000	1.27	0.31	.22†	1.75	6.50	5/16-24	2.00
6.0FC-SD	1.6250	6.50	4.46	1.625	1.64	0.38	.31††	1.88	8.00	3/8-24	2.38
11FC-SD	2.0000	8.50	5.06	2.000	1.75	0.38	.38††	2.25	10.00	3/8-24	3.25

* Dimensions in millimeters

† Dimension decreases .06 during overload
†† Dimension decreases .09 during overload
††† Dimension decreases .12 during overload
†††† Dimension decreases 1.5 mm during overload

FC-SD Type Specifications

Model	Internal Inertia	Torque Setting	Index Drive
.39FC-SD	7	160 210 270 320 390	250P
2.3FC-SD	34	400 600 700 850 1000 1300 1800 2000 2300	387P 350RGS/RGD 400RA
6.0FC-SD	118	670 825 1100 1400 1700 2000 2300 2500 3000 3800 4000 5000 6000	512P 512RA
11FC-SD	456	2300 4000 6000 8500 11000	500RGD/RGS 662P 662RA

C-SD TYPE SHAFT TO SHAFT, SHRINK-DISK MOUNTING SERIES

Overload Clutches | Dimensions and Technical Information

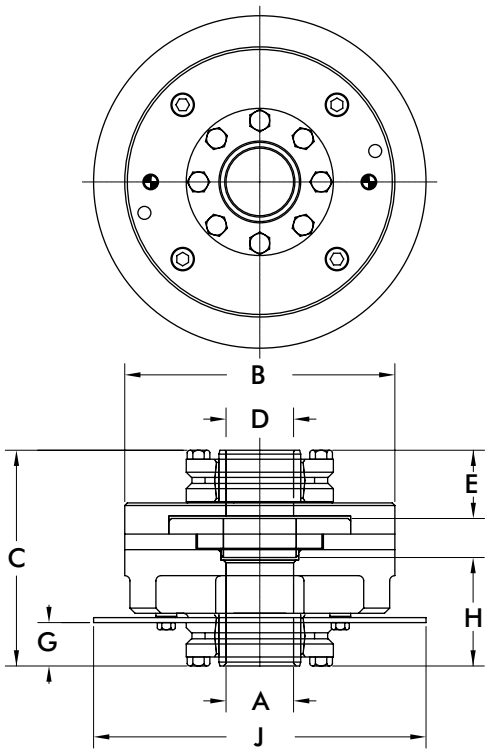

"C-SD" type clutches are designed to mount on CAMCO index drives without output flanges. The shrink disk design converts clamp loads from multiple high strength locking screws to radial gripping force through the use of circular wedges, providing the highest capacity mechanical interference connection available.

C-SD Type Dimensions

Model	A	B	C	D	E	G	H	J
.39C-SD	0.6250	3.38	3.44	0.625	1.03	.66†	1.84	4.75
2.3C-SD	1.0000	5.12	4.34	1.000	1.28	.75†	2.28	6.50
6.0C-SD	1.6250	6.50	5.19	1.625	1.64	1.04††	2.61	8.00
11C-SD	2.0000	8.50	5.75	2.000	1.75	1.06††	2.93	10.00

* Dimensions in millimeters

† Dimension decreases .06 during overload
†† Dimension decreases .09 during overload
††† Dimension decreases .12 during overload
†††† Dimension decreases 1.5 mm during overload

C-SD Type Specifications

Model	Internal Inertia	Torque Setting	Index Drive
.39C-SD	7	160 210 270 320 390	250P
2.3C-SD	44	400 600 700 850 1000 1300 1800 2000 2300	387P 350RGS/RGD 400RA
6.0C-SD	122	670 825 1100 1400 1700 2000 2300 2500 3000 3800 4000 5000 6000	512P 512RA
11C-SD	476	2300 4000 6000 8500 11000	500RGD/RGS 662P 662RA

CUSTOM CAMS

Product Overview



CAMCO Custom Cams serve as an economical alternative to "in house" cam design, engineering and manufacturing. Backed by over 100 years of experience, we offer cams in a comprehensive range of configurations, tolerances and materials.

Our designers employ the most advanced computer technology available for detailed kinematic studies and dynamic analysis. In addition to common dimensional inspection, we perform computerized contour measurements with sophisticated, unique inspection equipment in both 2D and 3D.

Our commitment to applied engineering allows us to respond quickly to complicated manufacturing issues with specialized solutions that are precise, economical and engineered to your exacting specifications. Alternative materials, milling, and grinding techniques are explored to provide the best solution for your application at the most economical price.

To assist in your in-house cam design, you can download Clyde H. Moon's "Cam Design Manual for Engineers, Designers, and Draftsman" from the DESTACO website, www.destaco.com.

Dimensions and technical information are subject to change without notice

Custom Cams are available in a variety of styles:

Plate Cams Popular, economical design used in low speed applications.	
Globoidal Cams Complex, tapered rib globoidal cams, commonly known as roller gear cams, are the heart of IMC's indexers. Controlled follower preloads increase follower life, speeds and accuracy for the ultimate solution in motion control.	
Face-Grooved Cams Medium speed cams using a groove slightly larger than the follower diameter providing minimal running clearance and reduced backlash.	
Conjugate Cams Dual cams controlling preloaded followers which provide higher speed capabilities and better accuracy.	
Barrel Cams Cylindrical cams which can be provided as an end cam, grooved type with minimal follower clearance or as a ribbed type utilizing preloaded followers for increased life and accuracy.	

RITE-LINK SERIES

Features and Benefits

Right Sized Conveying

The **CAMCO Rite-Link Conveyor** is a thin-profile, preassembled, precision link system offering maintenance free accuracy and durability for industrial conveying applications.

Precision positioning requiring higher precision or speed than roller chain can provide

Material conveying (industrial or medical): for example, narrow cleat or bucket conveyor for constant speed applications. The conveyor can be mounted for either over/under or carousel operation



Features:

Assembly
- Fully designed, assembled and tested for your application
- Can be used in an over/under or carousel configuration

Size
- Slim, compact design with narrow links accommodates oversized tooling
- Easy to integrate
- Servo-friendly for flexible indexing with CAMCO RSD rotary servo drive

Accuracy
- Precision motion from the trusted industry leader
- More accurate and stable than roller chain

Operation
- High operation speeds
- No lubrication needed
- Energy efficient
- Cost Effective

Maximum Load	Units	75RL...	115RL...	150RL...
Max Load per Link	kg [lbm]	4 [8.82]		
Max Overhung Load per Link	N-m [in-lb]	0,57 [5]		

* shipping/clearance dimensions

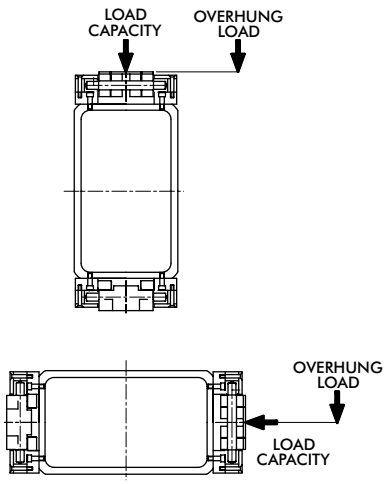

Dimensions and technical information are subject to change without notice

Link Dimensions

75mm [2.95 in]

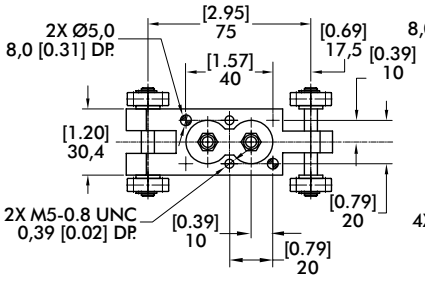

75RLIND (Industrial)
75RLMED (Medical)

115mm [4.53 in]

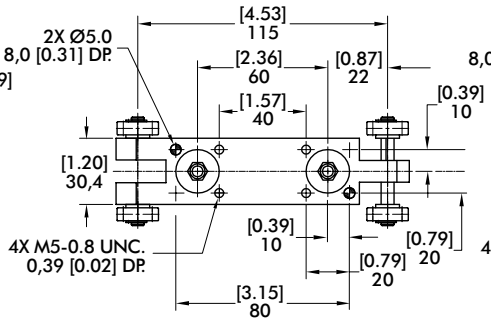

115RLIND (Industrial)
115RLMED (Medical)

150mm [5.91 in]

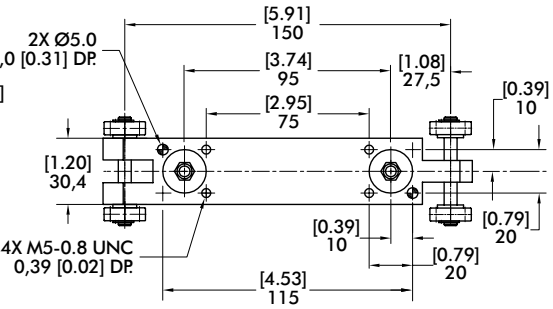

150RLIND (Industrial)
150RLMED (Medical)

Standard Centers Dimensions

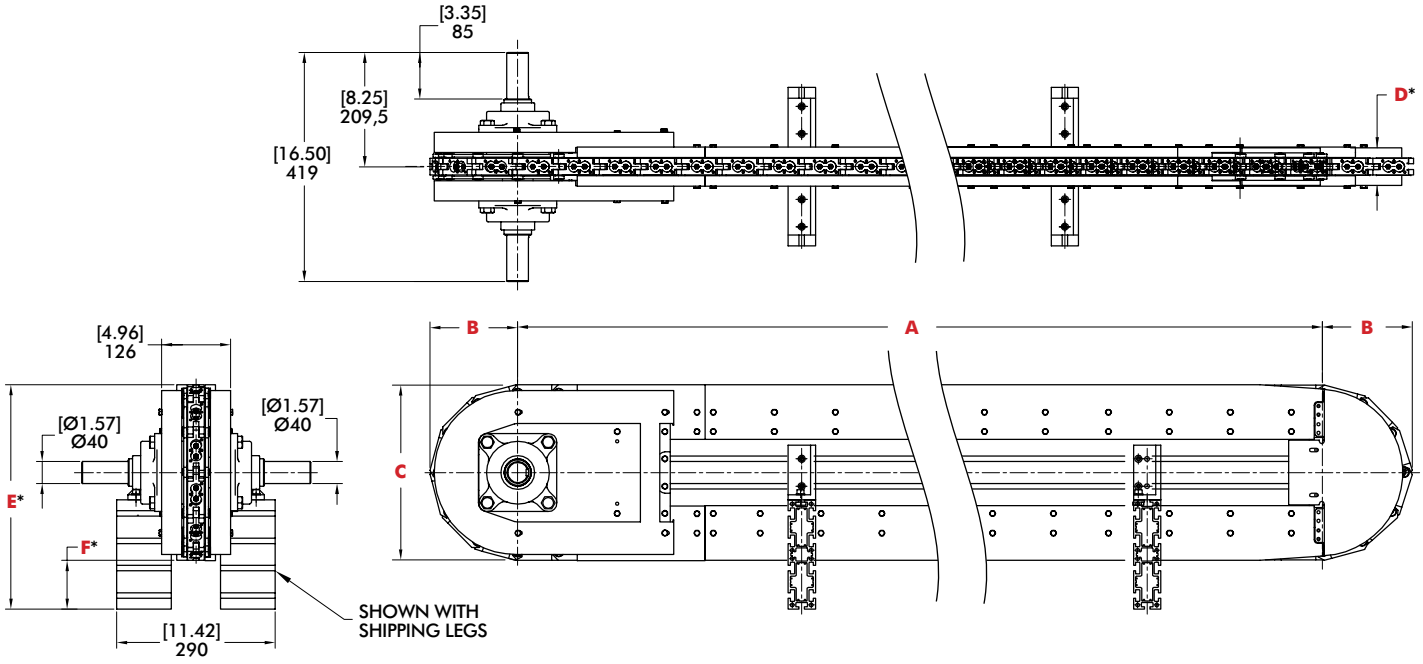

Technical Information

Dimensions	Units	75RL...	115RL...	150RL...
A Standard Center Distances				
Option 1	m [ft]	1,2 [3.94]	1,38 [4.53]	1,2 [3.94]
Option 2		2,1 [6.89]	2,30 [7.55]	2,1 [6.89]
Option 3		3 [9.84]	3,22 [10.56]	3 [9.84]
Option 4		3,9 [12.80]	4,14 [13.58]	3,9 [12.80]
Option 5		4,8 [15.75]	5,06 [16.60]	4,8 [15.75]
B	mm [in]	162,5 [6.40]	166 [6.54]	162,5 [6.40]
C	mm [in]	320 [12.60]	332 [13.07]	332 [13.07]
D*	mm [in]	78,1 [3.07]	78,1 [3.07]	78,1 [3.07]
E*	mm [in]	411 [16.18]	466,2 [18.35]	416 [16.38]
F*	mm [in]	89 [3.50]	133,8 [5.27]	84 [3.31]

* shipping/clearance dimensions

PRECISION INDEXING SOLUTIONS

Table of Contents

INDEXERS

Servo Positioners



GTB Series
Globoidal (Roller Gear)
Servo Positioner.....IN-SRV-1



RSD Series
Rotary Servo Drives.....IN-SRV-39

Mechanical Indexers



RDM Series
Rotary Index Drive IN-MCH-2



RD Series
Roller Dial Index Drive..... IN-MCH-18



E Series
Heavy-Duty Index Drive IN-MCH-30



RA Series
Right Angle Index Drive IN-MCH-42



RGD/RGS Series
Roller Gear Index Drive IN-MCH-52



P Series
Parallel Shaft/Flange Drive.... IN-MCH-72



RNG Series
Ring Drive Dial Indexer.....IN-MCH-84

OVERLOAD CLUTCHES



Overload Clutches
Output Overload..... IN-CLU-1

CUSTOM CAMS



Custom Cams
Cam Design Solutions IN-CAM-1

CONVEYORS



Rite-Link Series
Thin-Profile.....IN-CNV-1



Precision Link Series
Table-Top IN-CNV-4



Precision Link Series
Heavy-Duty IN-CNV-16

PARTS HANDLERS



LPP Series
Linear Part Handlers IN-PRT-2



RPP Series
Rotary Part Handlers IN-PRT-8

Dimensions and technical information are subject to change without notice

TABLE-TOP MODULAR CONVEYORS

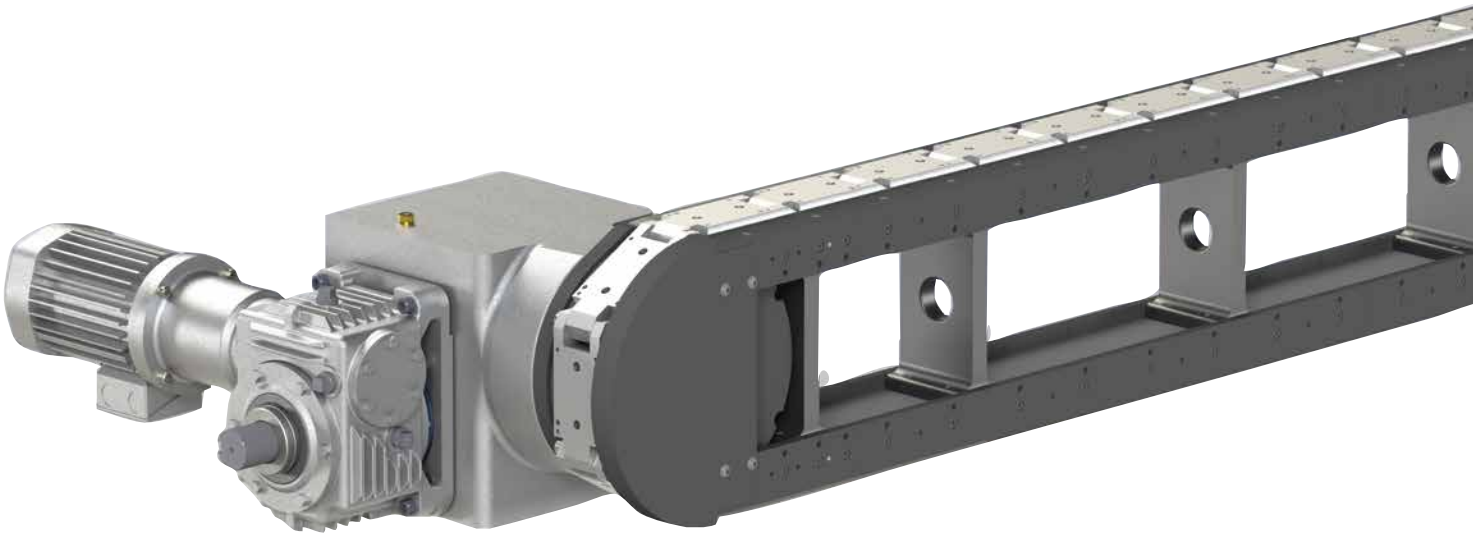

Features:

CAMCO Modular Table Top Precision Link Conveyors are ideal for linear transfer applications with features including:

Modular frame design in fixed increment lengths facilitates quick assembly and delivery.

Table-Top or Base mounted

Available in carousel or over-under style

Precision positioning of parts for assembly or manufacturing processes

High-speed station-to-station parts transfer

Precision links with roller bearing cam followers for smooth transfer and long life.

Link lengths of 3.0", 4.5", and 6.0" meet most application requirements

Open frame design for pass-through of belting, linkages, electric and air supply components.

Optional bases, line shafts & tooling plates

Complete with motorized index drive system including overload protection.

Table of Contents

3.0 Inch 3

4.5 Inch 5

6.0 Inch 7

Conveyor Options 9

3.0 INCH SERIES

Table-Top Modular Conveyors | Dimensions and Configurations

Modular Conveyor (module only)

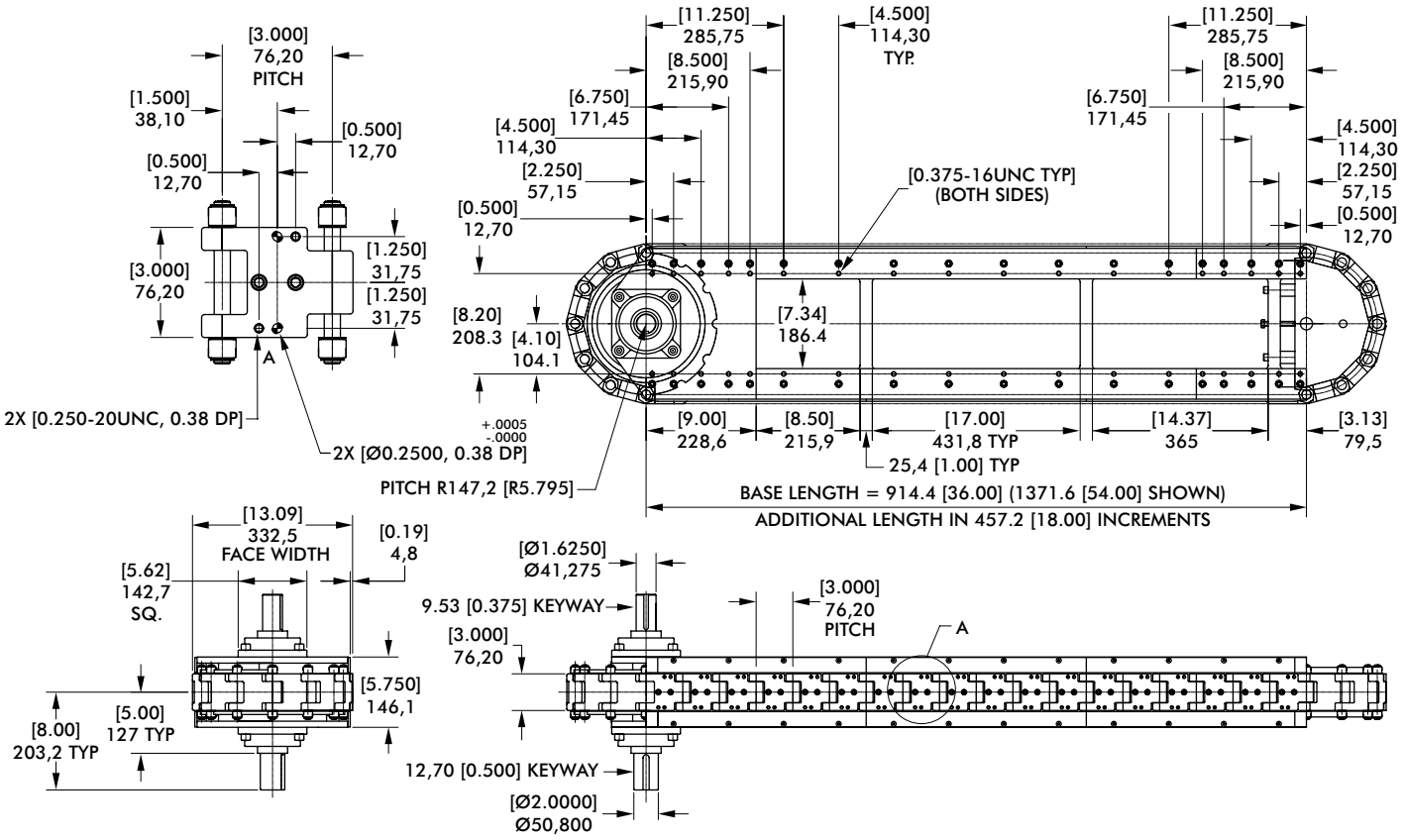

Modular Conveyor (drive package)

Standard Drive Package

- 512RA Index Drive
- R225 Gear Reducer
- 6.0FC-SD Overload Clutch (Shaft Drive)
- 6.0S-SD Overload Clutch (Direct Drive)
- 1 HP high-cycling, performance AC Motor
- IM-pAC Motor Control

Heavy-Duty Drive Package

- 662RA Index Drive
- 7300C Gear Reducer
- 11FC-SD Overload Clutch (Shaft Drive)
- 6.0-SD Overload Clutch (Direct Drive)
- 1 HP high-cycling, performance AC Motor
- IM-pAC Motor Control

Index Distance mm [in]	Indexer Stops
76,2 [3.00]	12
152,4 [6.00]	6
228,6 [9.00]	4
304,8 [12.00]	3

Direct Drive Carousel

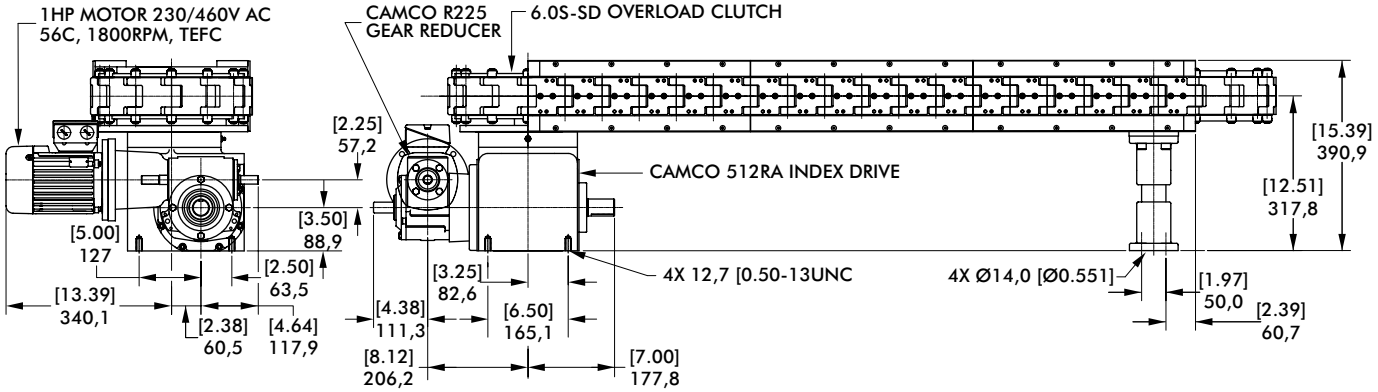

Dimensions and technical information are subject to change without notice

Table-Top Modular Conveyors | Configurations

Shaft Drive Carousel

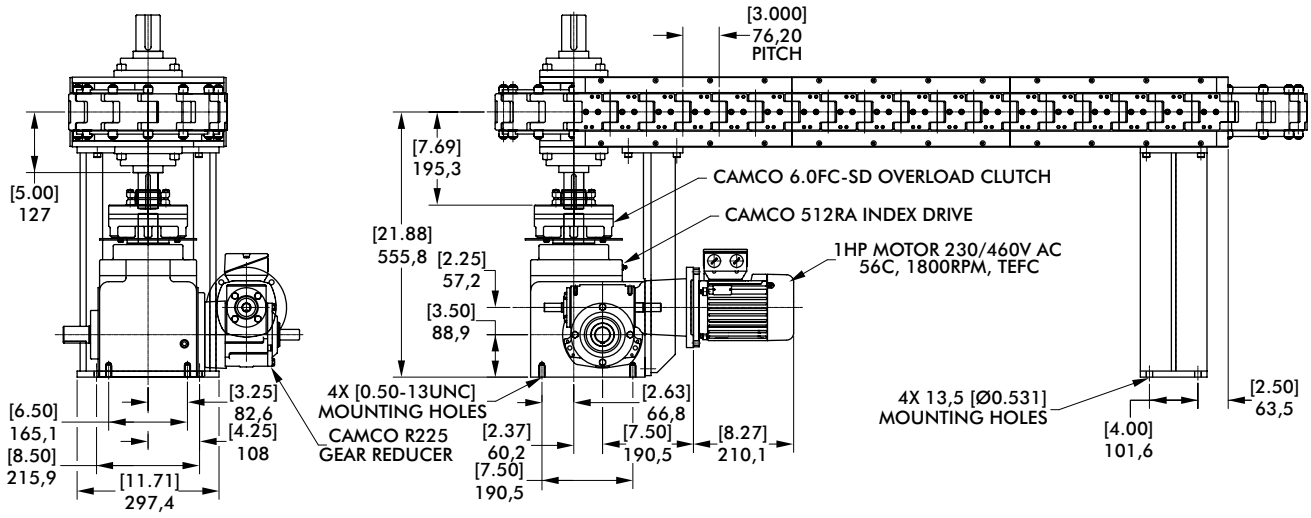

Shaft Drive Over/Under

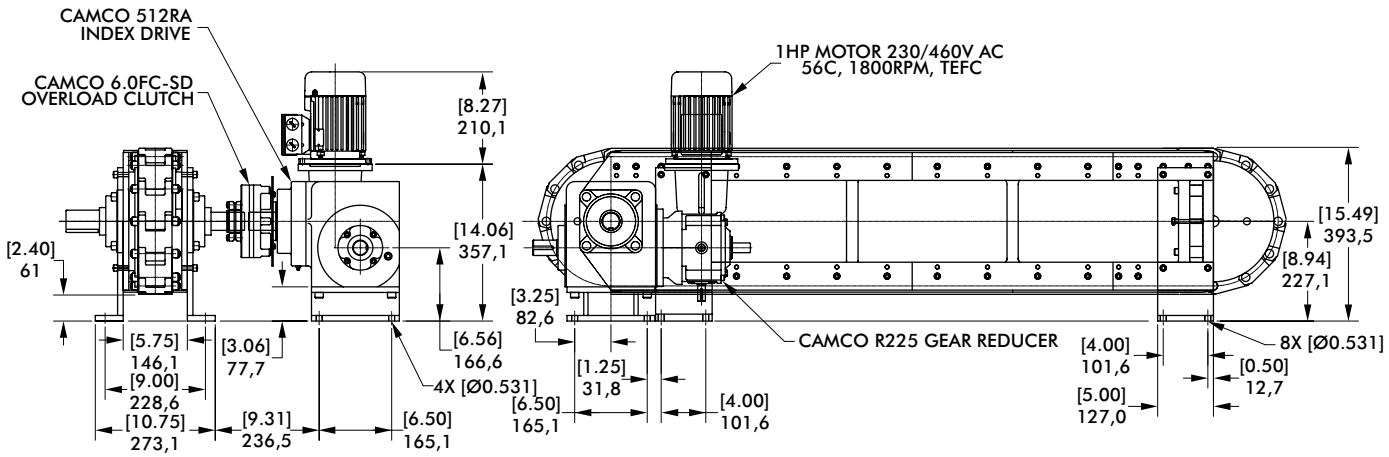

Direct Drive Over/Under

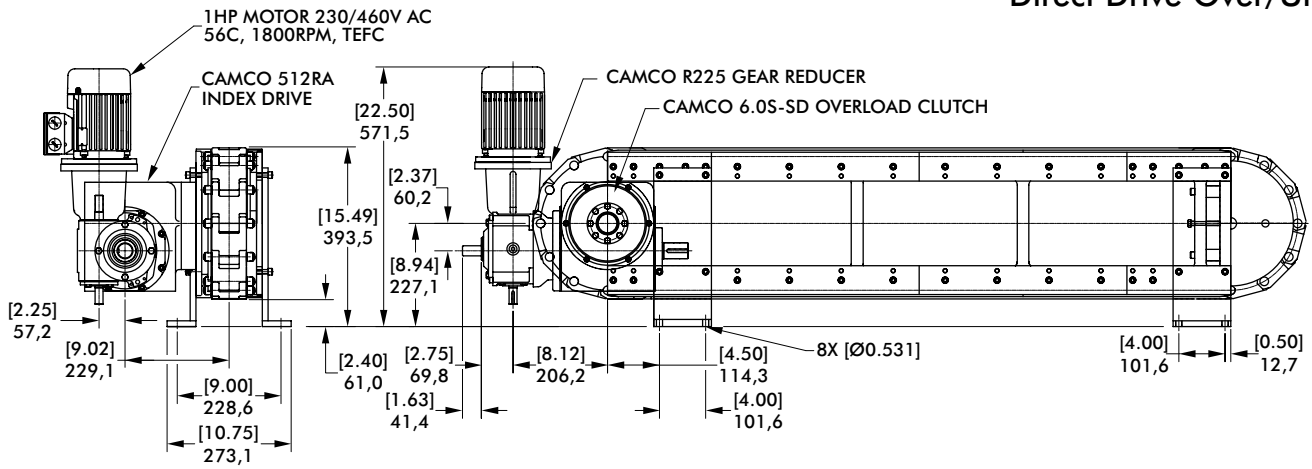

4.5 INCH SERIES

Table-Top Modular Conveyors | Dimensions and Configurations

Modular Conveyor (module only)

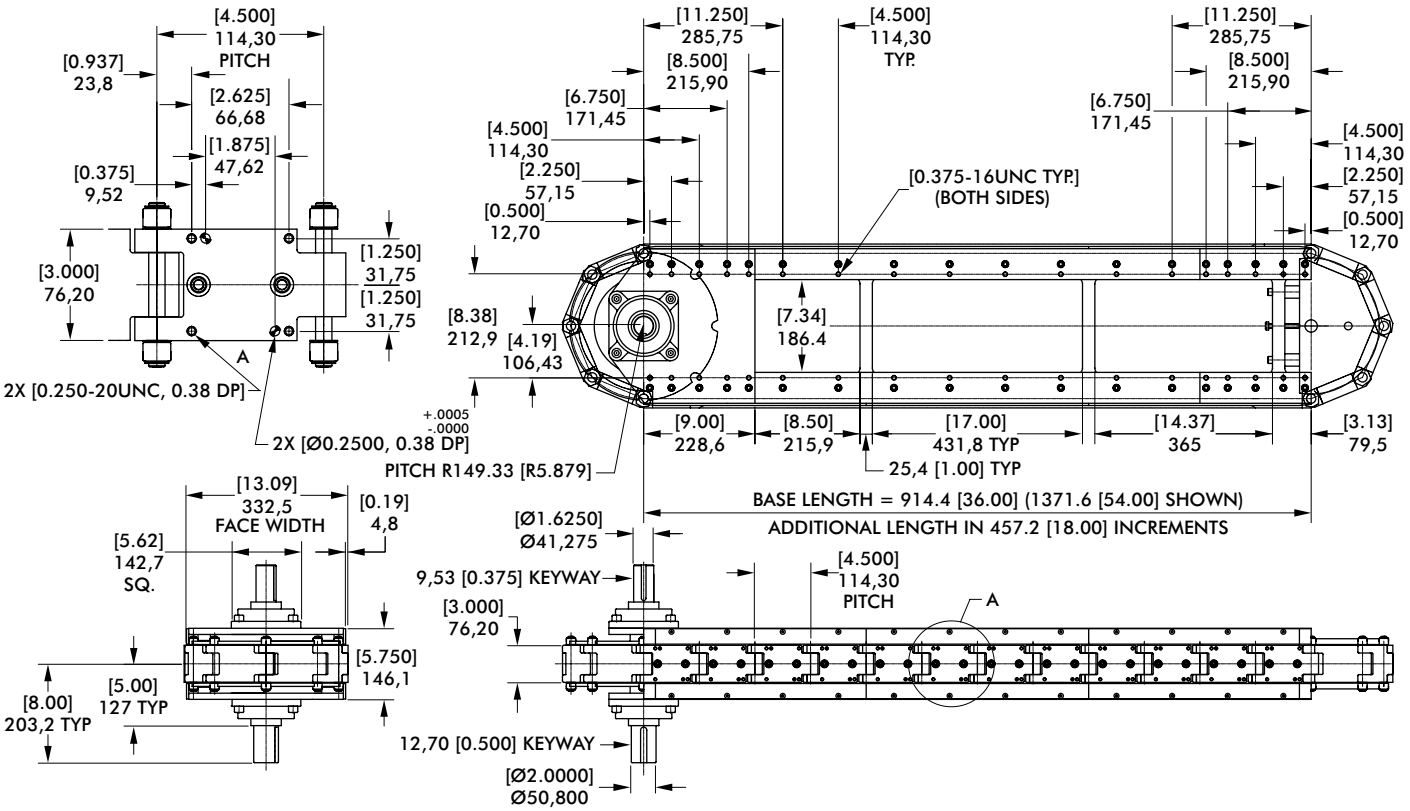

Modular Conveyor (drive package)

Standard Drive Package

- 512RA Index Drive
- R225 Gear Reducer
- 6.0FC-SD Overload Clutch (Shaft Drive)
- 6.0S-SD Overload Clutch (Direct Drive)
- 1 HP high-cycling, performance AC Motor
- IM-pAC Motor Control

Heavy-Duty Drive Package

- 662RA Index Drive
- 7300C Gear Reducer
- 11FC-SD Overload Clutch (Shaft Drive)
- 6.0-SD Overload Clutch (Direct Drive)
- 1 HP high-cycling, performance AC Motor
- IM-pAC Motor Control

Index Distance mm [in]	Indexer Stops
76,2 [4.50]	8
228,6 [9.00]	4
457,2 [18.00]	2

Direct Drive Carousel

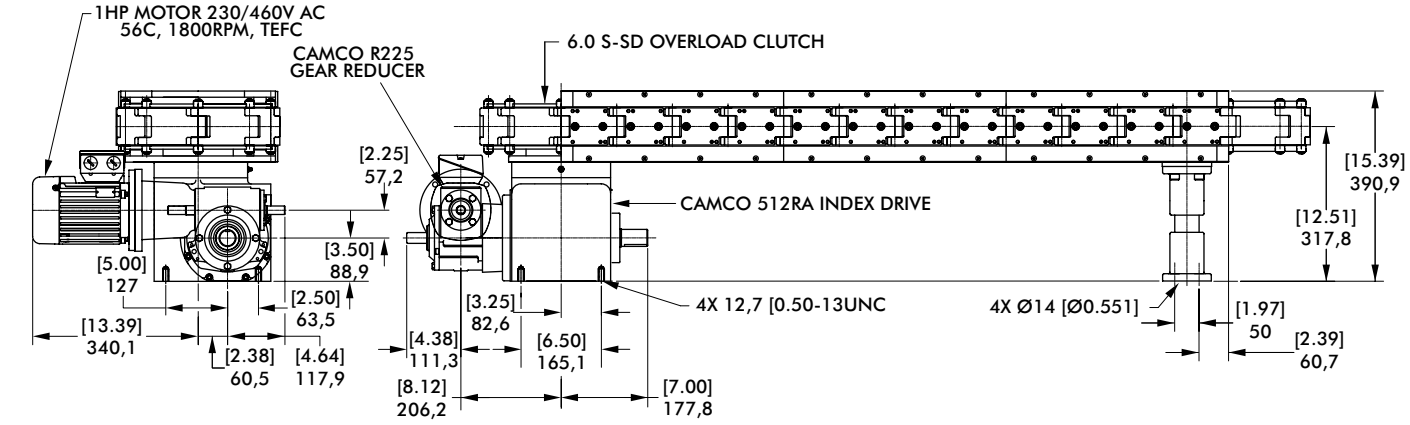

Dimensions and technical information are subject to change without notice

Shaft Drive Carousel

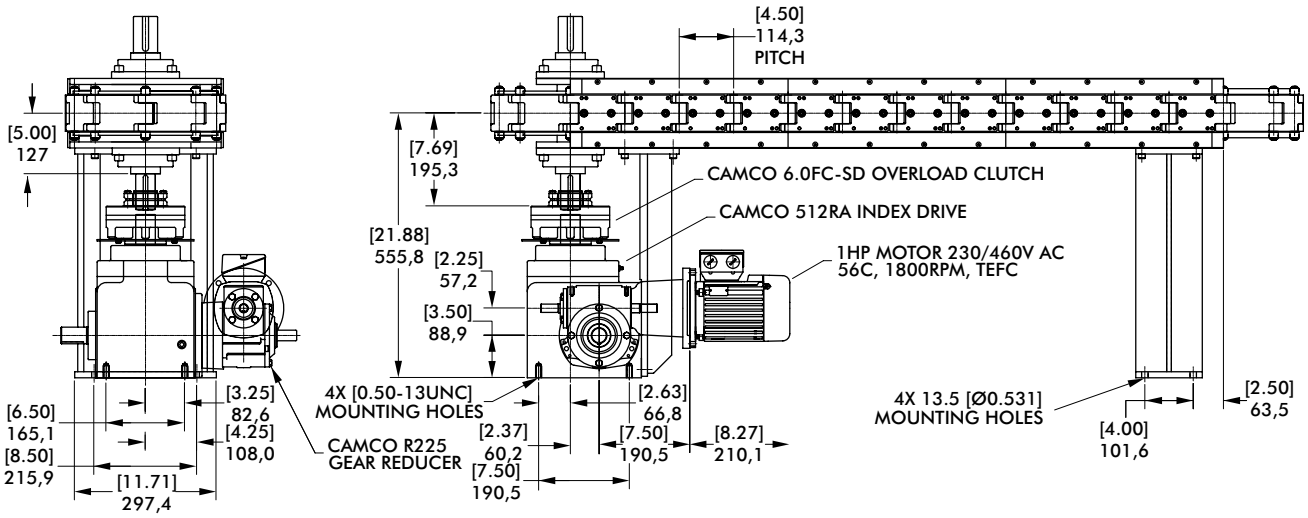

Shaft Drive Over/Under

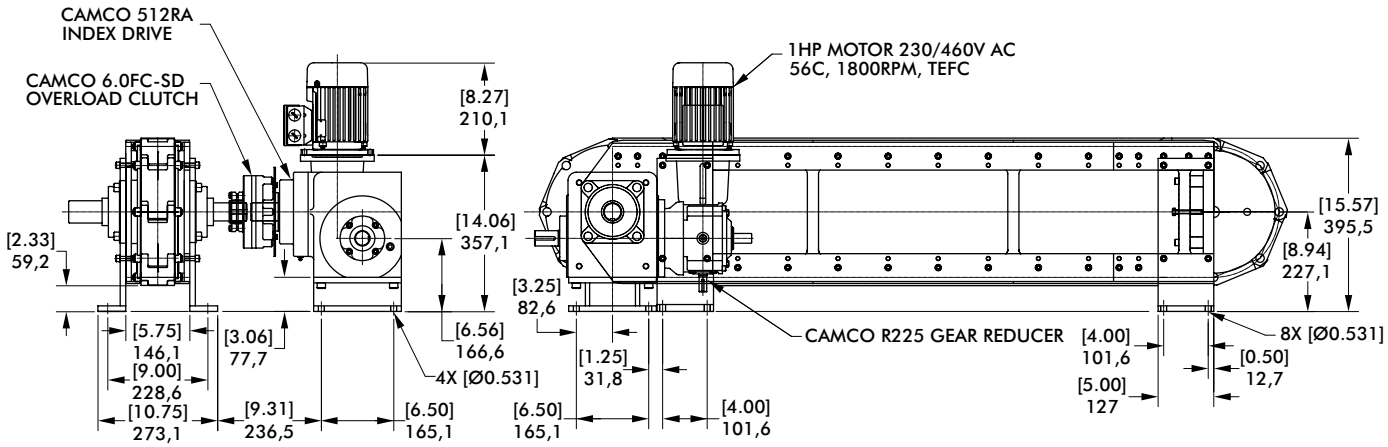

Direct Drive Over/Under

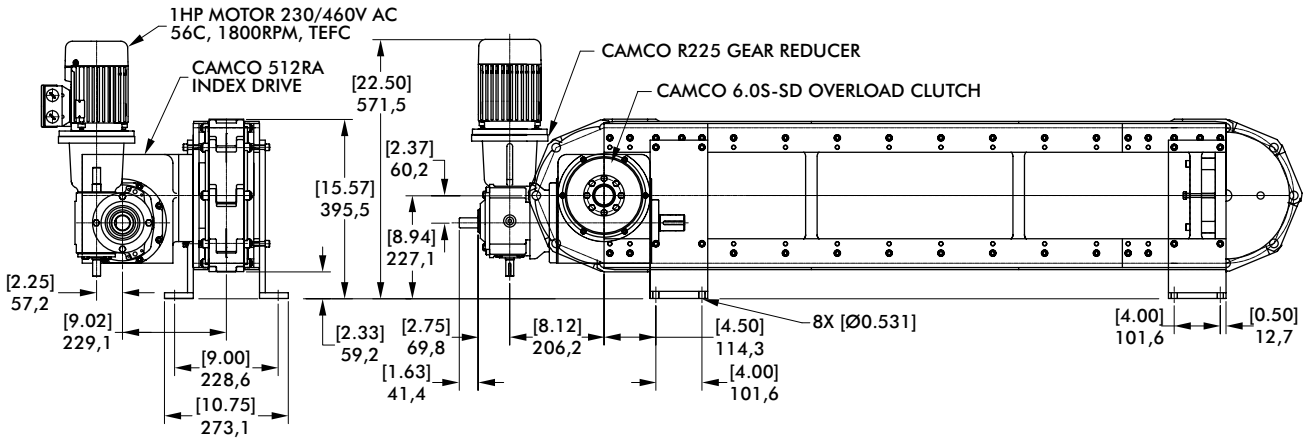

6.0 INCH SERIES

Table-Top Modular Conveyors | Dimensions and Configurations

Modular Conveyor (module only)

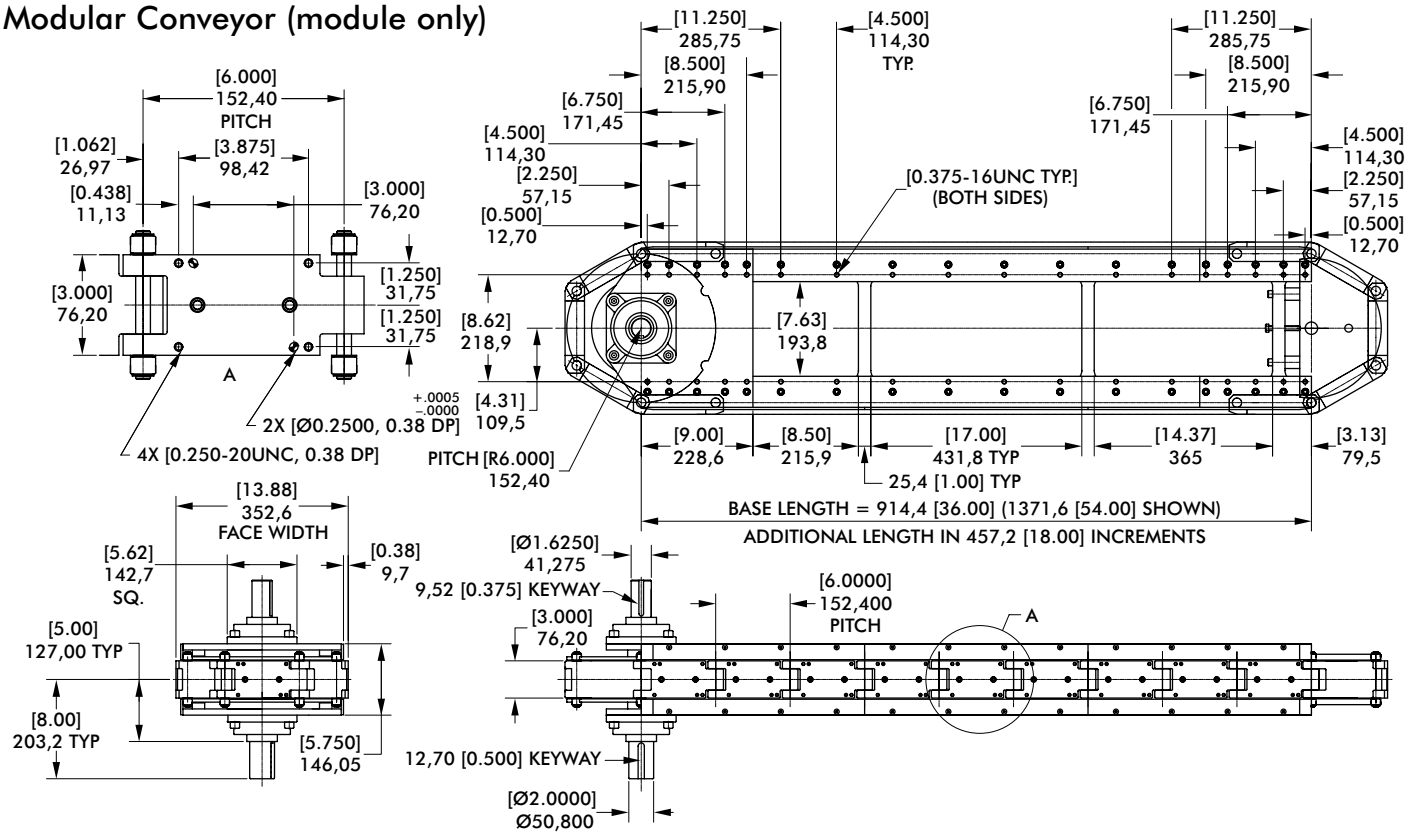

Modular Conveyor (drive package)

Standard Drive Package

- 662RA Index Drive
- 7300C Gear Reducer
- 11FC-SD Overload Clutch (Shaft Drive)
- 6.0S-SD Overload Clutch (Direct Drive)
- 1 HP high-cycling, performance AC Motor
- IM-pAC Motor Control

Heavy-Duty Drive Package

- 800RD Index Drive
- 7300C Gear Reducer
- 25FC-SD Overload Clutch
- 1 HP high-cycling, performance AC Motor
- IM-pAC Motor Control

Index Distance mm [in]	Indexer Stops
152,4 [6.00]	6
304,8 [12.00]	3
457,2 [18.00]	2

Direct Drive Carousel

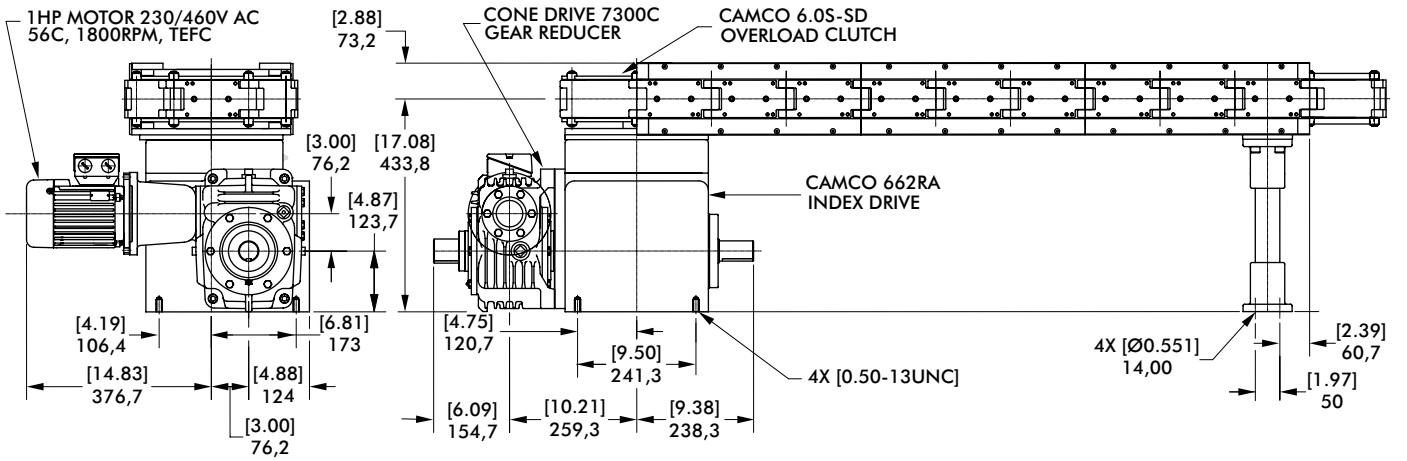

Dimensions and technical information are subject to change without notice

Shaft Drive Carousel

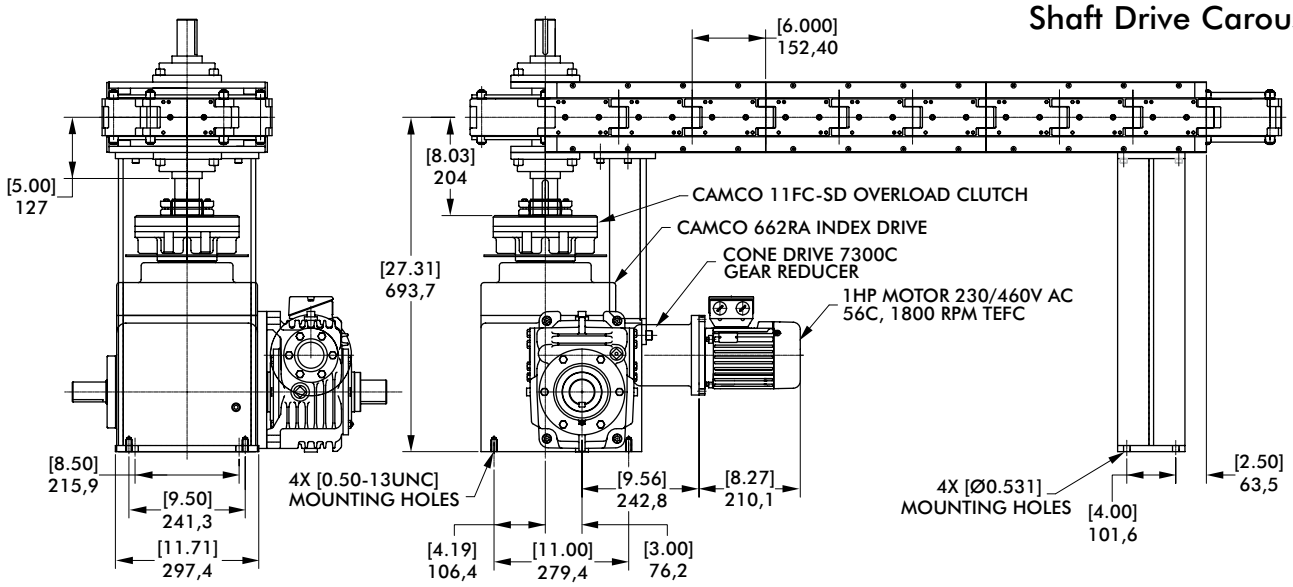

Shaft Drive Over/Under

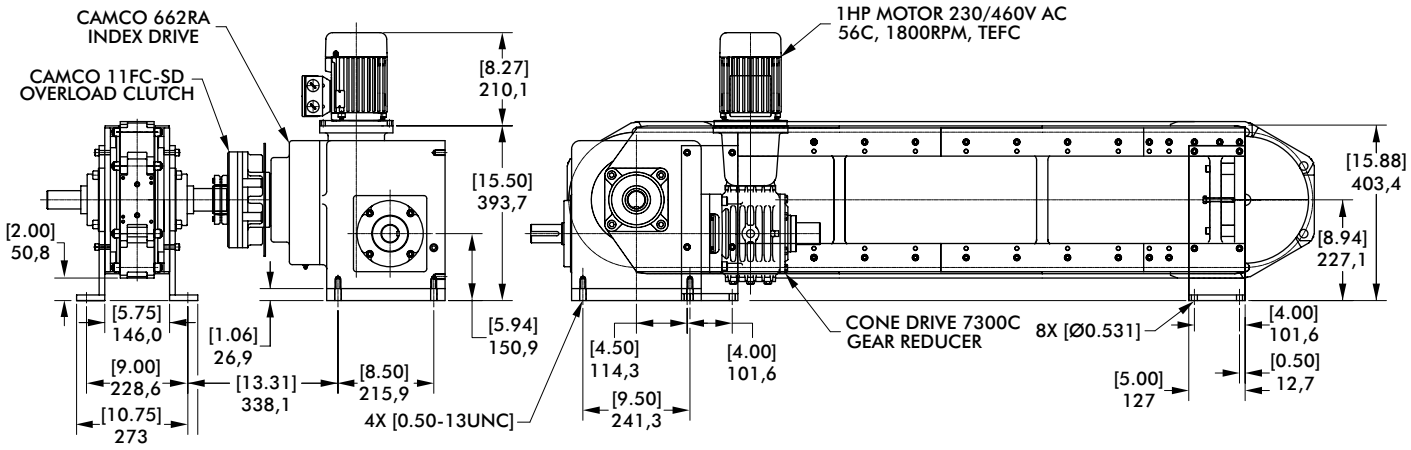

Direct Drive Over/Under

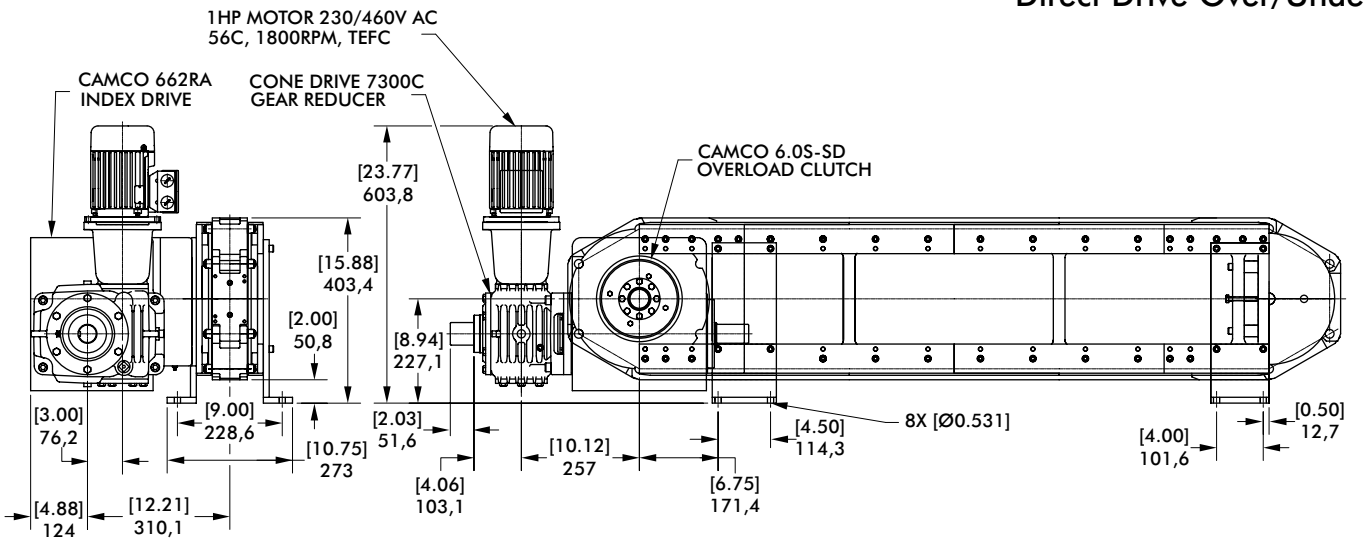

TABLE-TOP MODULAR CONVEYORS

Conveyor Types

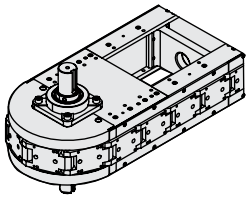

MODULE ONLY

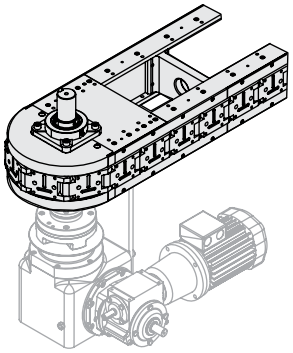

CAROUSEL-SHAFT DRIVEN

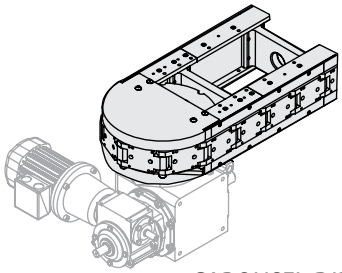

CAROUSEL-DIRECT DRIVEN

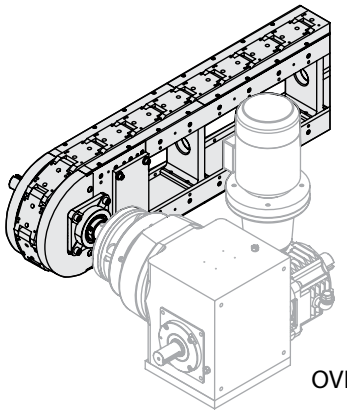

OVER-UNDER SHAFT DRIVEN

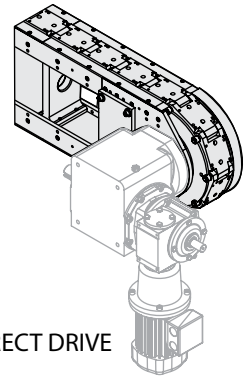

OVER-UNDER DIRECT DRIVE

Carousel Indexer Position

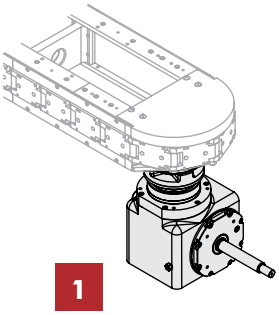

1

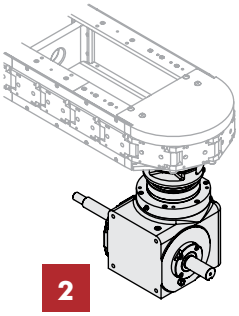

2

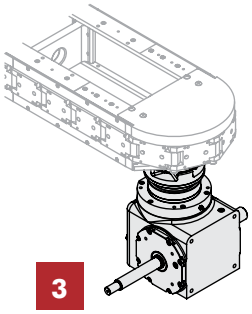

3

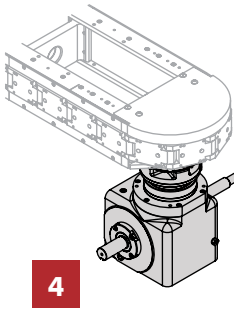

4

Over/Under Side

DRIVE - SIDE 1

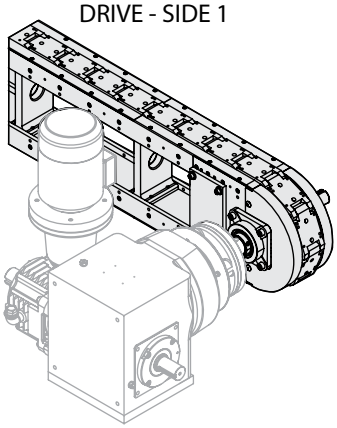

DRIVE - SIDE 2

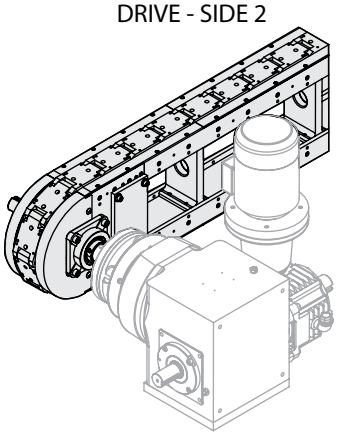

Dimensions and technical information are subject to change without notice

TABLE-TOP MODULAR CONVEYORS

Options

Tooling Plate Options Carousel

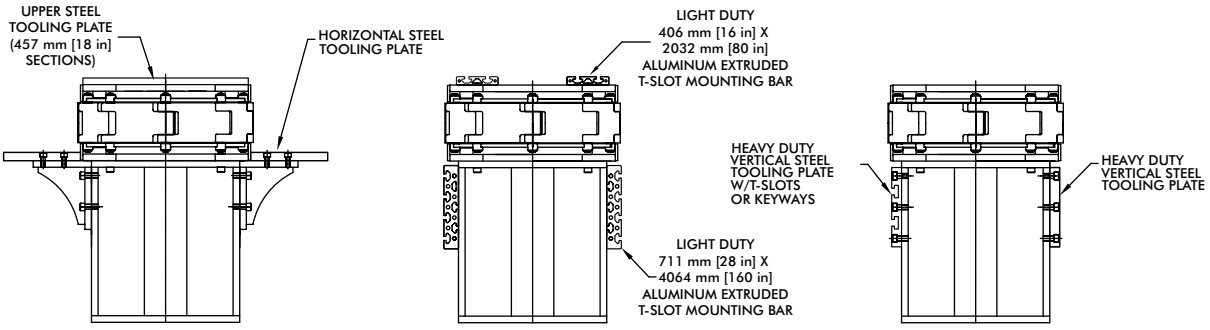

Tooling Plate Options Over/Under

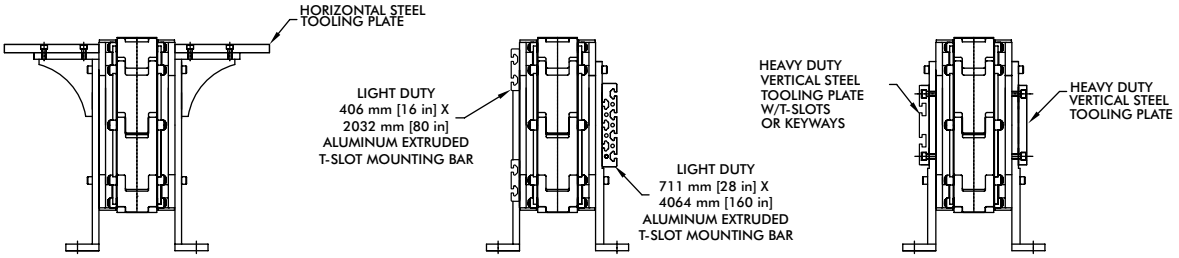

Support Leg Options

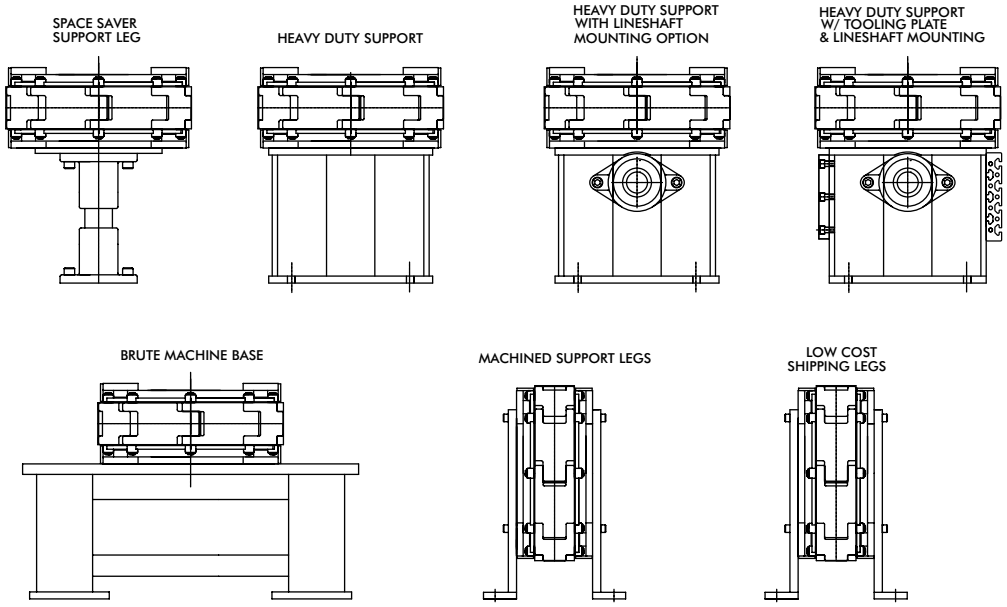

TABLE-TOP MODULAR CONVEYORS

Options

Lower Lineshaft Options Belt Driven

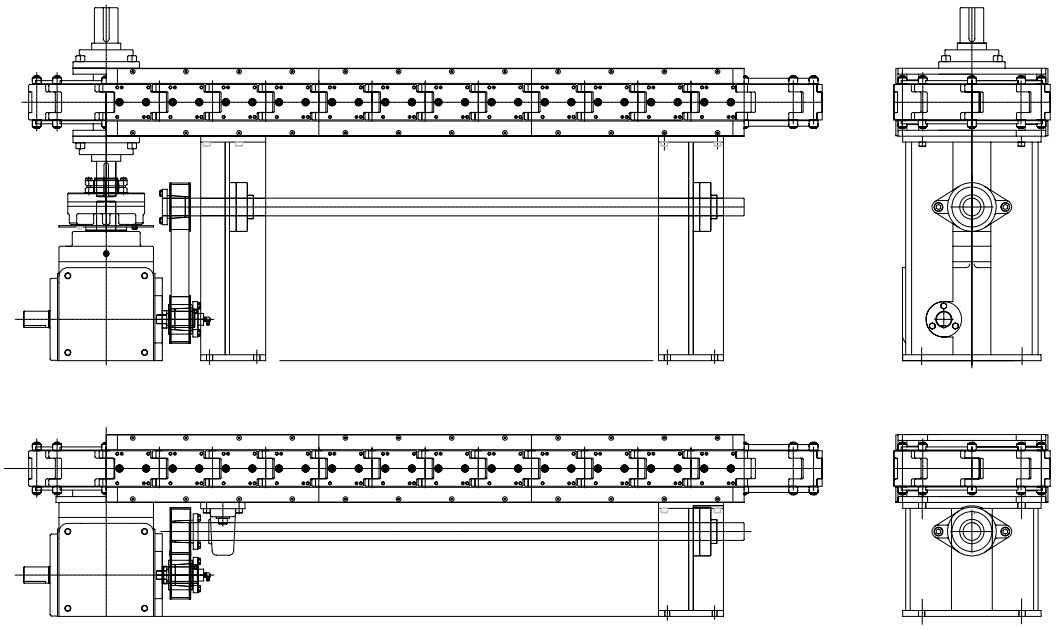

Lower Lineshaft Options Direct Driven

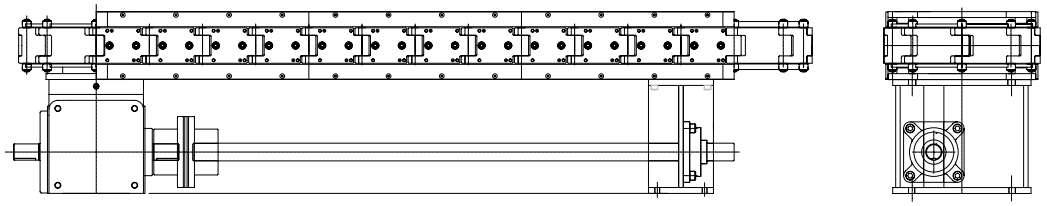

Drive Side Lineshaft Options Belt Driven

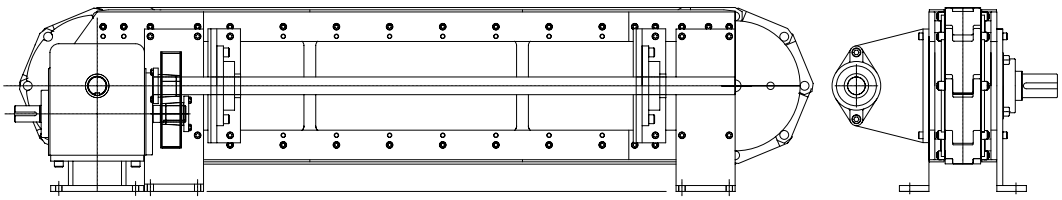

Drive Side Lineshaft Options Direct Driven

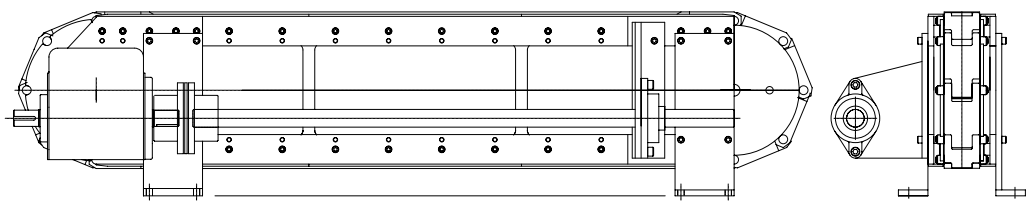

Dimensions and technical information are subject to change without notice

PRECISION INDEXING SOLUTIONS

Table of Contents

INDEXERS

Servo Positioners



GTB Series
Globoidal (Roller Gear)
Servo Positioner.....IN-SRV-1



RSD Series
Rotary Servo Drives.....IN-SRV-39

Mechanical Indexers



RDM Series
Rotary Index Drive IN-MCH-2



RD Series
Roller Dial Index Drive..... IN-MCH-18



E Series
Heavy-Duty Index Drive IN-MCH-30



RA Series
Right Angle Index Drive IN-MCH-42



RGD/RGS Series
Roller Gear Index Drive IN-MCH-52



P Series
Parallel Shaft/Flange Drive.... IN-MCH-72



RNG Series
Ring Drive Dial Indexer.....IN-MCH-84

OVERLOAD CLUTCHES



Overload Clutches
Output Overload..... IN-CLU-1

CUSTOM CAMS



Custom Cams
Cam Design Solutions IN-CAM-1

CONVEYORS



Rite-Link Series
Thin-Profile.....IN-CNV-1



Precision Link Series
Table-Top IN-CNV-4



Precision Link Series
Heavy-Duty IN-CNV-16

PARTS HANDLERS



LPP Series
Linear Part Handlers IN-PRT-2



RPP Series
Rotary Part Handlers IN-PRT-8

Dimensions and technical information are subject to change without notice

HEAVY DUTY MODULAR CONVEYORS



Features:

CAMCO Heavy Duty Precision Link Conveyors combine excellent accuracy with high load capacity to provide the versatility needed to meet virtually any automated assembly or manufacturing challenge.

Standard link lengths of 6.0", 9.0" and 12"

Over/Under and Carousel configurations

Precision links with roller bearing cam followers for smooth transfer and long life

Provided with heavy-duty legs and a precision machined base designed to hold large loads and maintain system accuracy

Available with adjustable soft machine mounts to accommodate inconsistent on-site flooring

Customize length and height and add optional line shafts or tooling plates to fit your application

Table of Contents

How to Order 3

Conveyor Options 4

6.0 Inch Heavy Duty 5

9.0 Inch Heavy Duty 7

12.0 Inch Heavy Duty 9

HEAVY DUTY MODULAR CONVEYORS

How To Order

Required Information

- **Link Size:** 1.5, 2.0, 3.0, 4.5, 6.0, 9.0 or 12.0 inch
- **Type:** Table Top or Heavy Duty
- **Style:** Over/Under or Carousel
- **Length:** Standard per catalog or Custom, expressed as center distance, in inches
- **Height:** Standard per catalog or Custom, in inches

Required Information when ordering Drive Package

- **Type:** Standard, Alternate, Heavy-Duty or Special
- **Drive Side:** 1 or 2 (for Over/Under)
- **Index Distance:** In inches
- **Indexer Model:** Specific model number or special

Technical Assistance

All Precision Link Conveyor applications are verified by a CAMCO sales agent using the CAMCO Sizing Program.

Your CAMCO agent is available to make all sizing calculations for you.

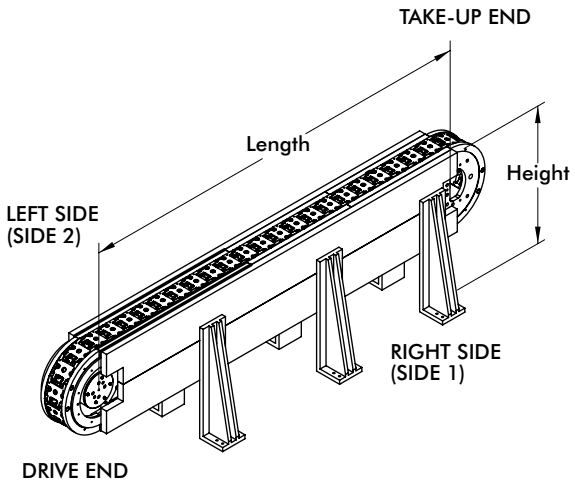

OVER/UNDER

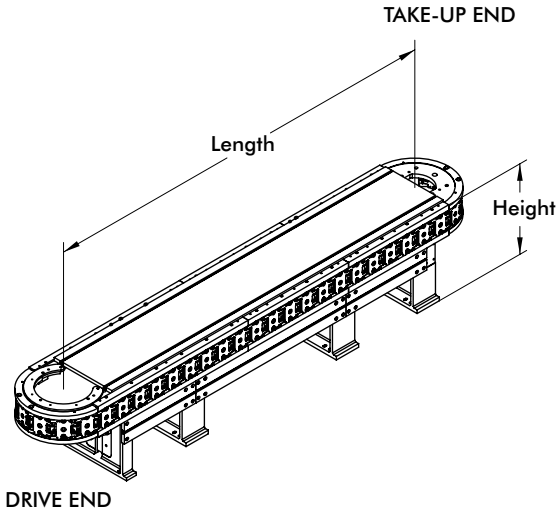

CAROUSEL

Dimensions and technical information are subject to change without notice

Options

CAMCO offers a wide variety of standard and custom options on all precision link conveyers. Tooling plates and conveyor mainframes can be ordered with custom hole configurations or burnouts. Other standard options include timing chains, timing belts and extended lineshafts. Standard drive package options include CAMCO indexers with AC motors and clutch-brakes, DC motors or servo motors. CAMCO's special Indexer output overload clutches are highly recommended to protect the indexer, link assembly and tooling.

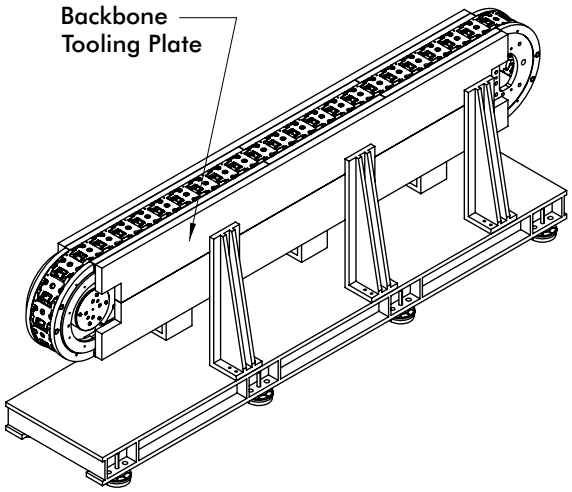

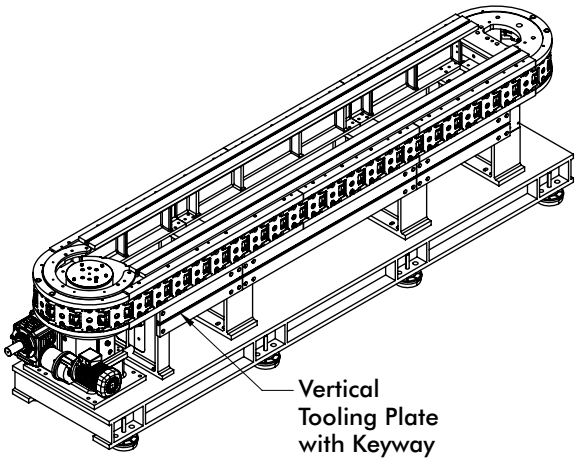

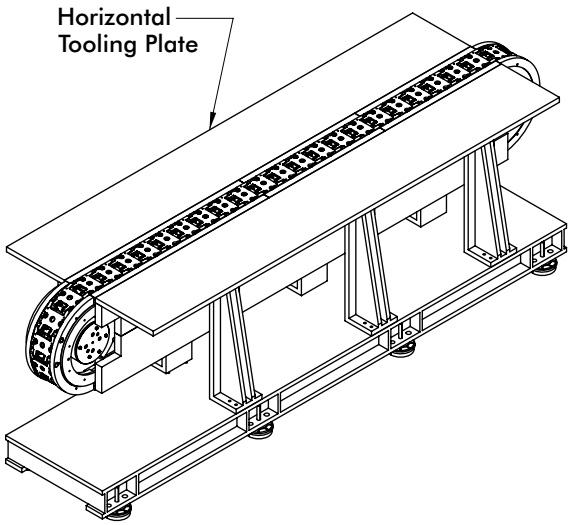

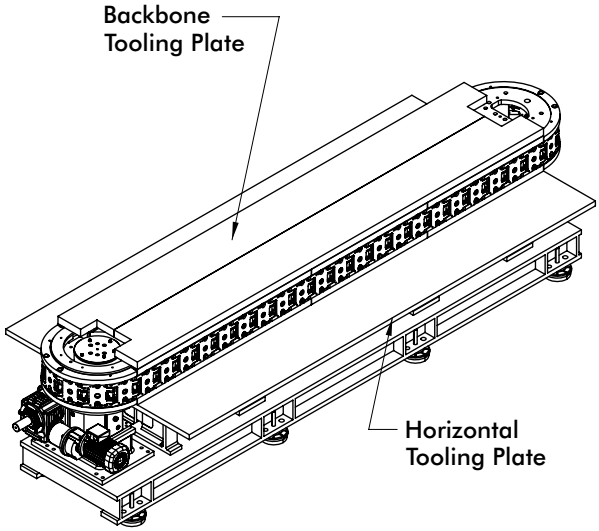

Using Cambot Parts Handlers with Precision Link Conveyors

Cambot linear pick-and-place parts handlers have custom cam motions incorporated into each unit, providing complex synchronize timings for your application. They can be mounted onto the backbone tooling plages of the conveyor. Cambot linear pick-and-place parts handlers can be belt driven off a common line shaft for perfect synchronization. See the Rotary Parts Handler section (page IN-RPP-2) for other possible configurations, such as a rotary pick-and-place device loading parts from a continuous line conveyor to a CAMCO index drive conveyor.

6.0 INCH HEAVY DUTY SERIES

Heavy Duty Modular Conveyors | Dimension

Link

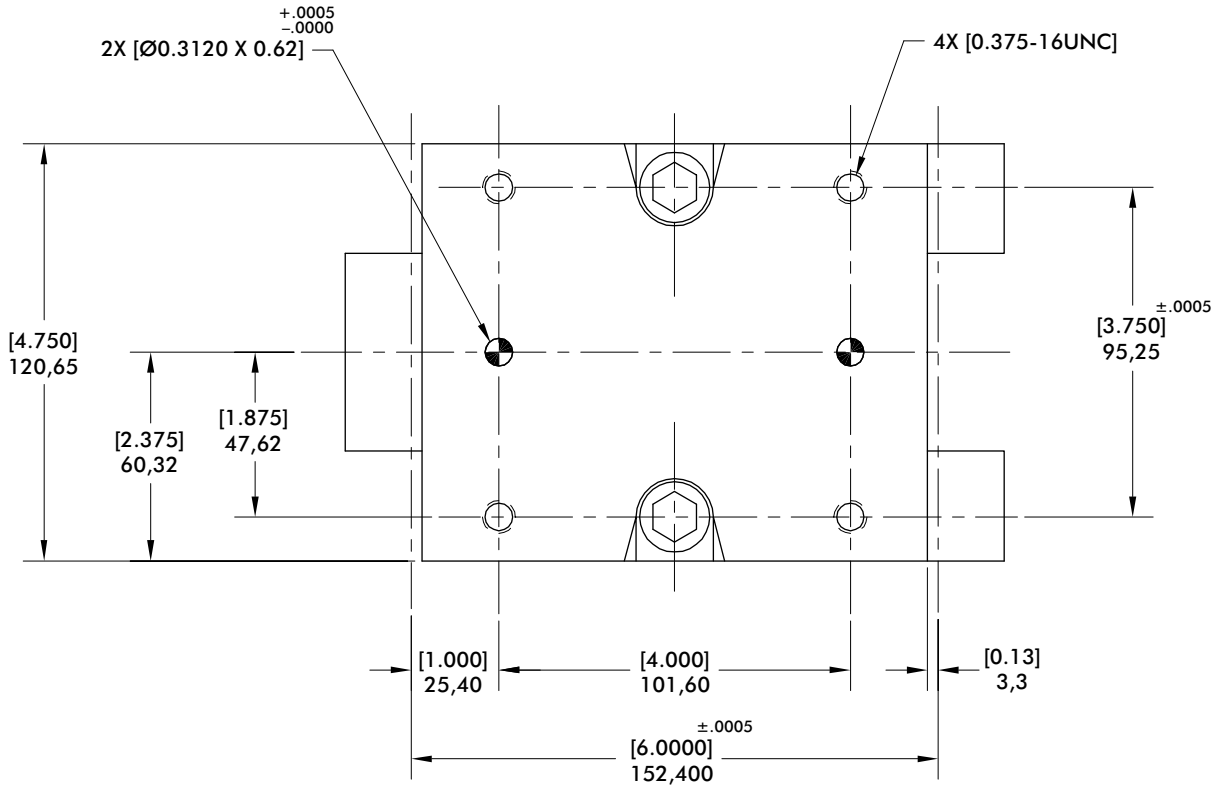

Modular Conveyor (drive package)

Standard Drive Package

- 1301RD Intermittor
- 73500C Reducer
- 5 HP AC Motor
- MDB-1125 Air Clutch-Brake
- Cycle Cam & Limit Switch

Index Distance mm [in]	Indexer Stops
152,4 [6.00]	12
304,8 [12.00]	6
457,2 [18.00]	4
609,6 [24.00]	3

Carousel

STANDARD*

A
3657,6 [144.00]
5486,4 [216.00]
7315,2 [288.00]

*Conveyor lengths can be customized for your application. Please consult factory.

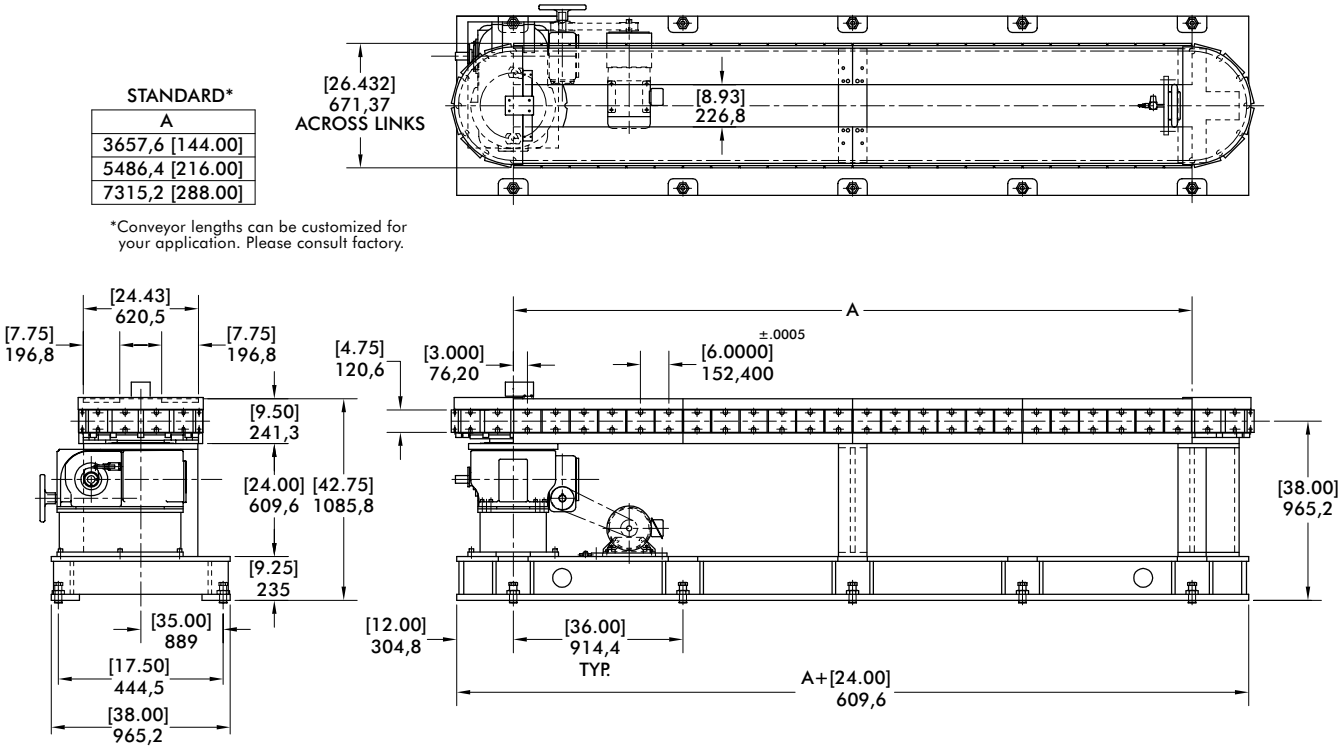

Over/Under

STANDARD*

A
3657,6 [144.00]
5486,4 [216.00]
7315,2 [288.00]

*Conveyor lengths can be customized for your application. Please consult factory.

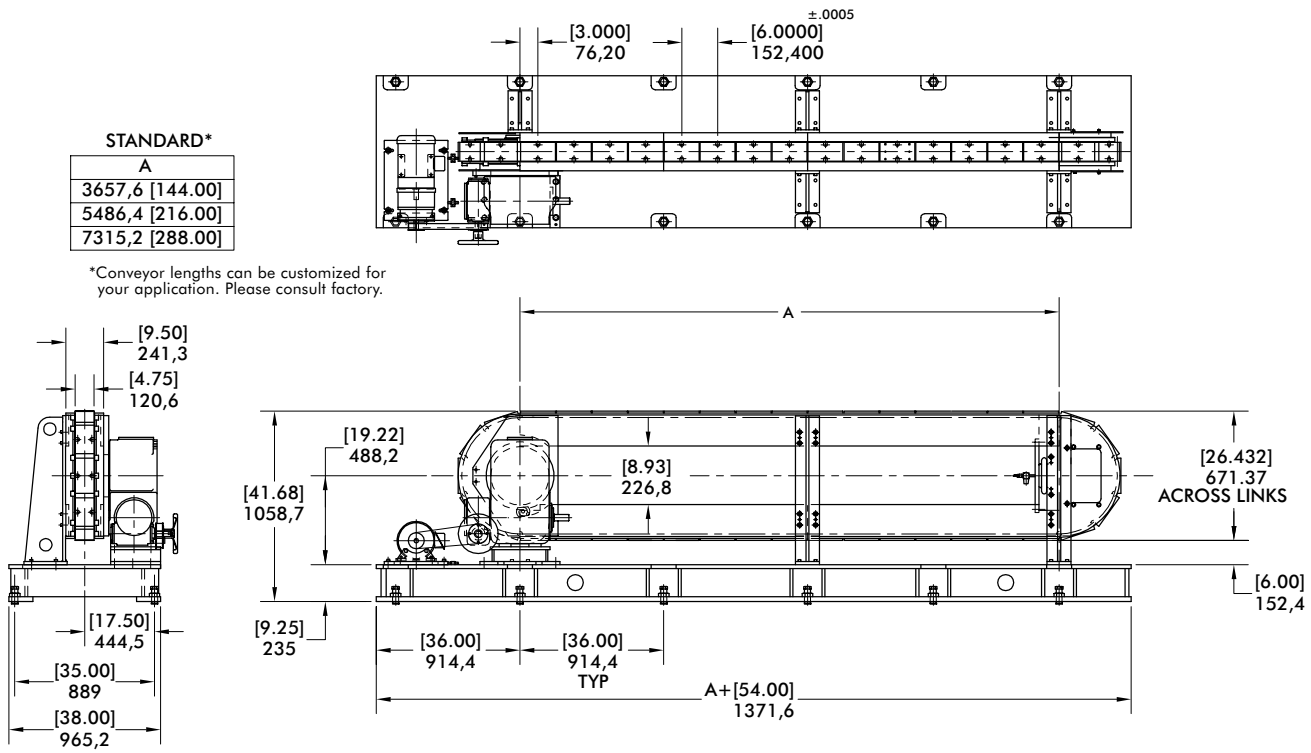

9.0 INCH HEAVY DUTY SERIES

Heavy Duty Modular Conveyors | Dimensions

Link

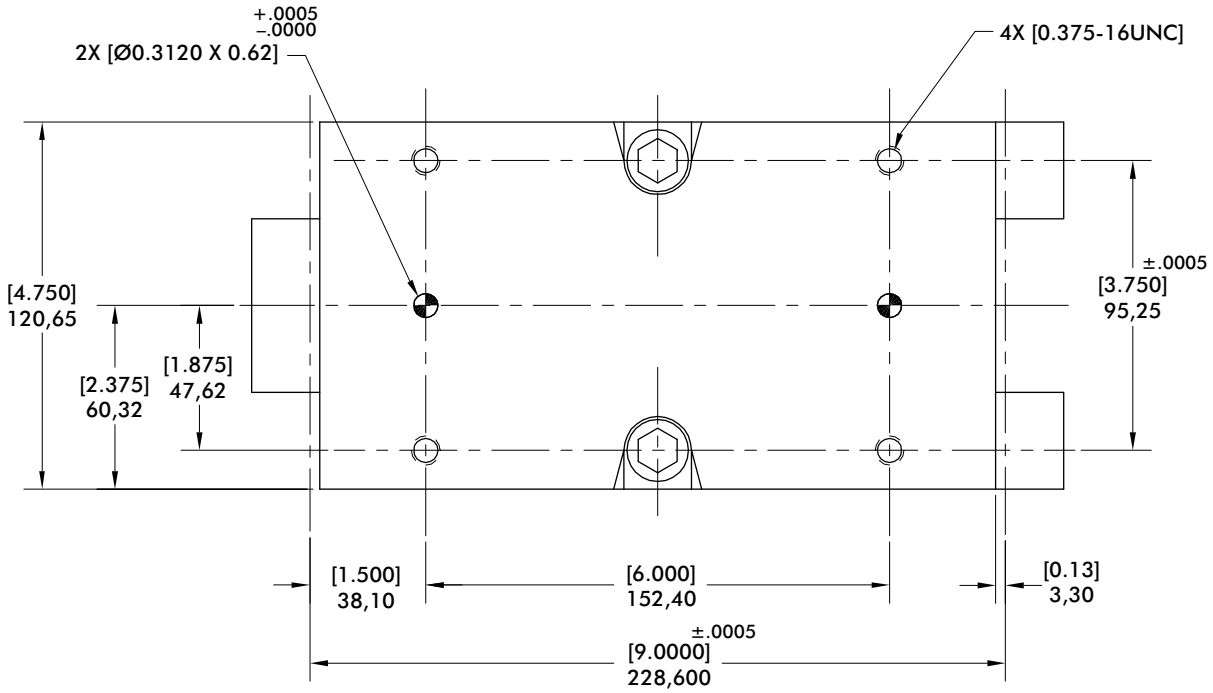

Modular Conveyor (drive package)

Standard Drive Package

- 1301RD Intermittor
- 73500C Reducer
- 5 HP AC Motor
- MDB-1125 Air Clutch-Brake
- Cycle Cam & Limit Switch

Index Distance mm [in]	Indexer Stops
228,6 [9.00]	12
457,2 [18.00]	6
914,4 [27.00]	4
609,6 [36.00]	3

Carousel

STANDARD*
A
3657,6 [144.00]
5486,4 [216.00]
7315,2 [288.00]

*Conveyor lengths can be customized for your application. Please consult factory.

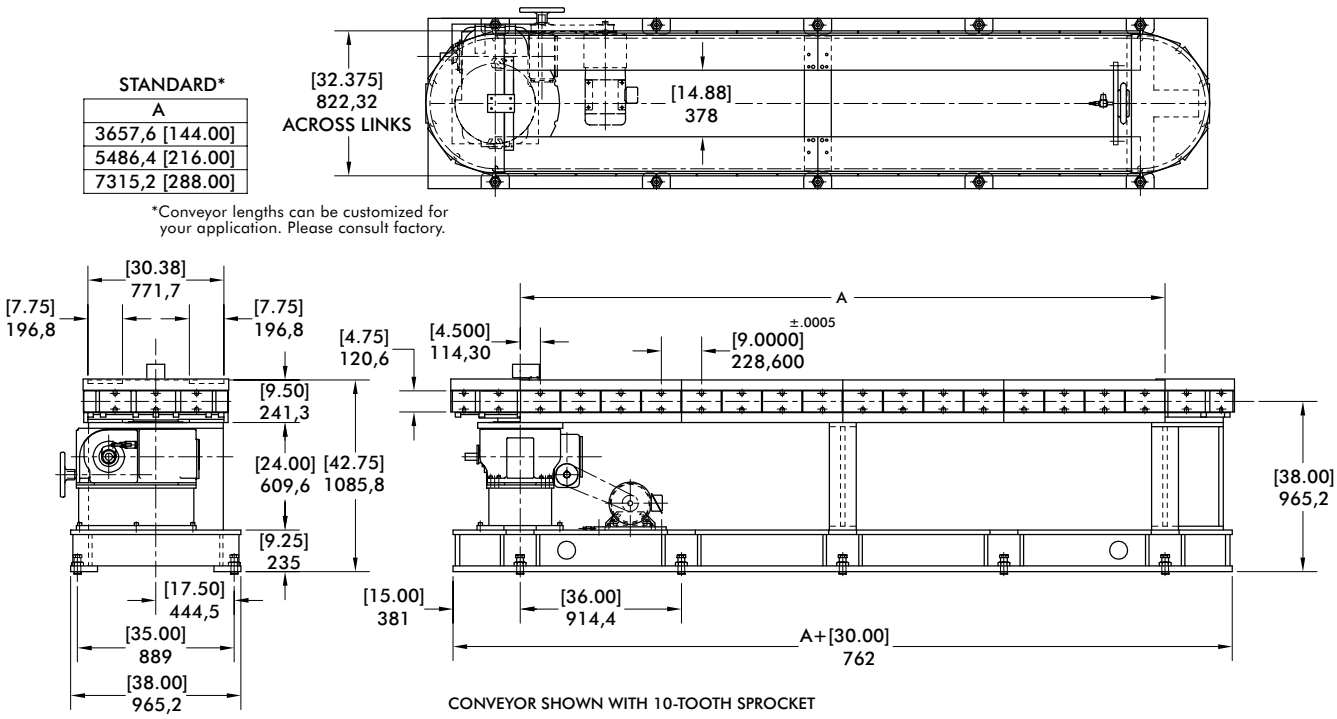

CONVEYOR SHOWN WITH 10-TOOTH SPROCKET

Over/Under

STANDARD*
A
3657,6 [144.00]
5486,4 [216.00]
7315,2 [288.00]

*Conveyor lengths can be customized for your application. Please consult factory.

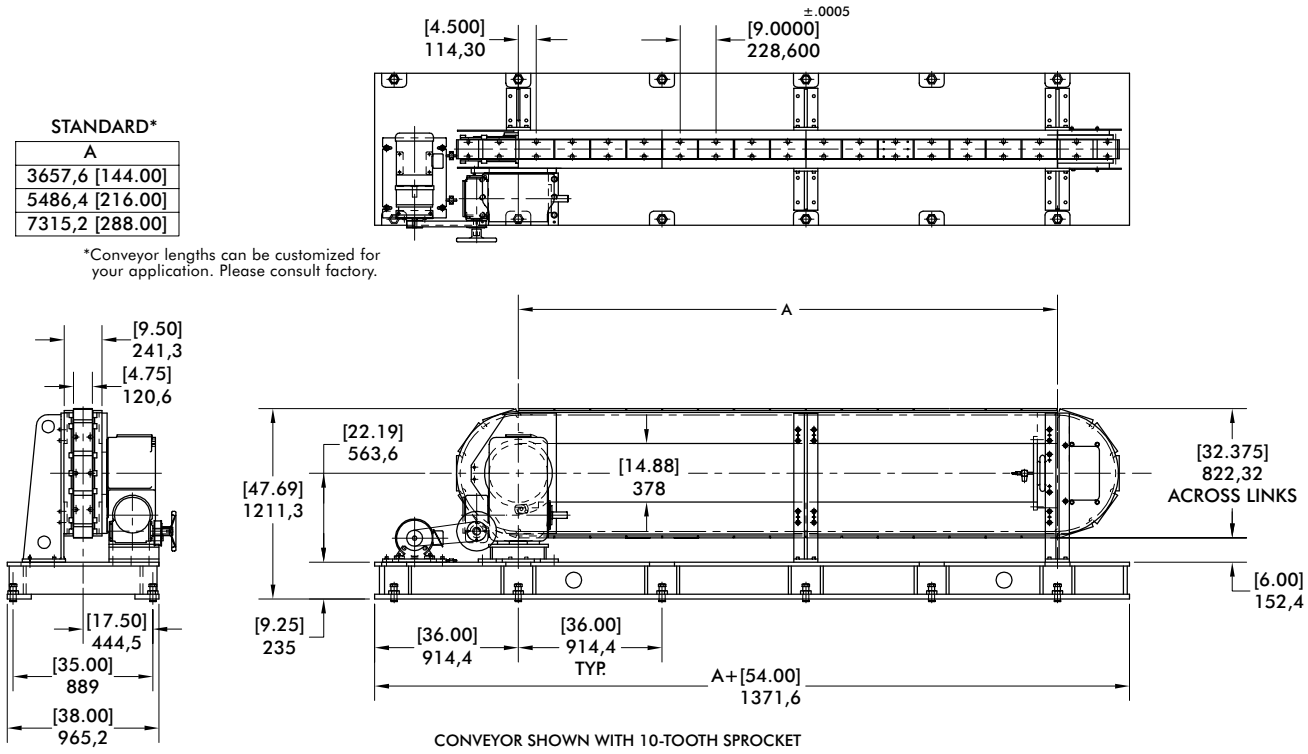

CONVEYOR SHOWN WITH 10-TOOTH SPROCKET

12.0 INCH HEAVY DUTY SERIES

Heavy Duty Modular Conveyors | Dimensions

Link

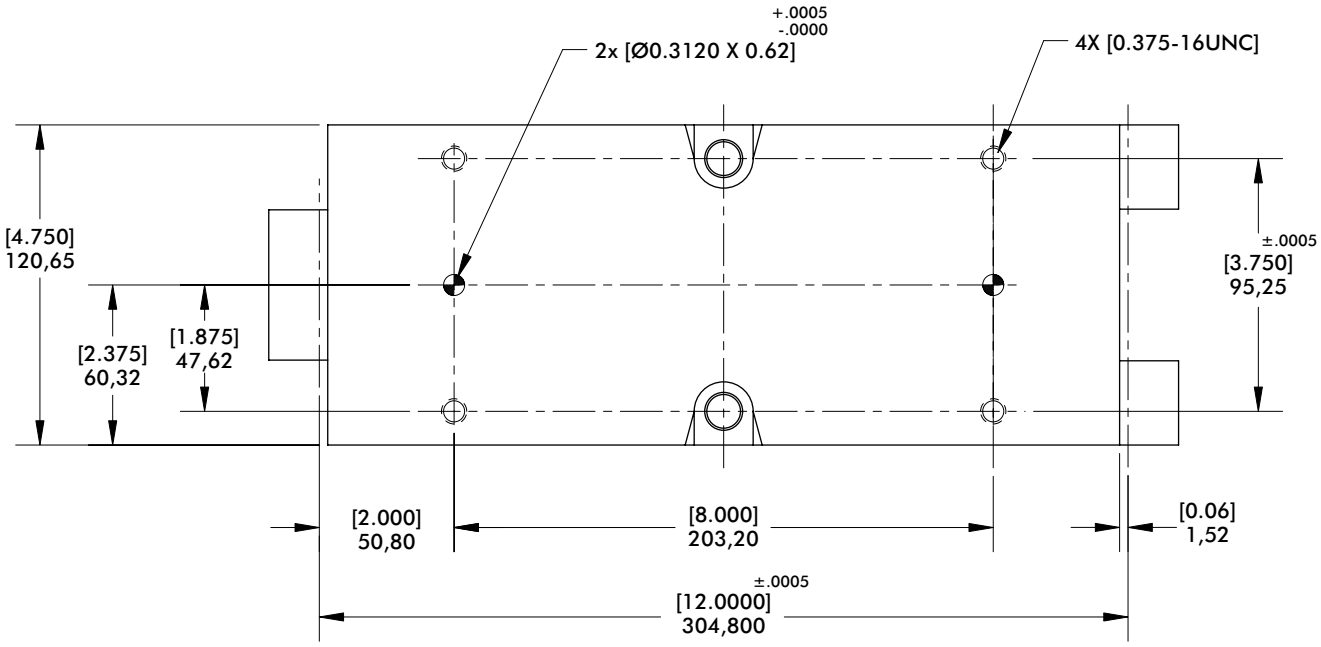

Modular Conveyor (drive package)

Standard Drive Package

- 1301RD Intermittor
- 7500C Reducer
- 5 HP AC Motor
- MDB-1125 Air Clutch-Brake
- Cycle Cam & Limit Switch

Index Distance mm [in]	Indexer Stops	Sprocket
304,8 [12]	8, 10, 12	8T, 10T, 12T
609,6 [24]	4, 5, 6	8T, 10T, 12T
914,4 [36]	4	12T
1219,2 [48]	2, 3	8T, 12T

Dimensions and technical information are subject to change without notice

Carousel

STANDARD*
A
3657,6 [144.00]
5486,4 [216.00]
7315,2 [288.00]

*Conveyor lengths can be customized for your application. Please consult factory.

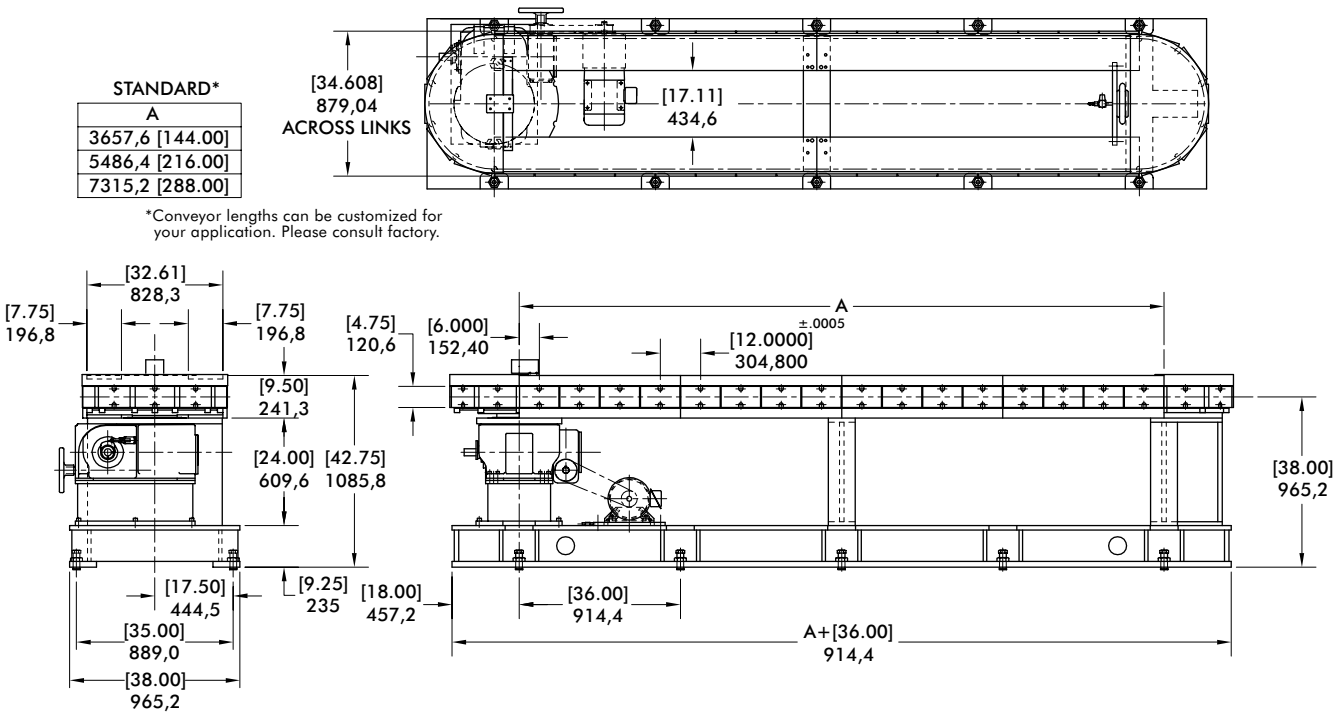

Over/Under

STANDARD*
A
3657,6 [144.00]
5486,4 [216.00]
7315,2 [288.00]

*Conveyor lengths can be customized for your application. Please consult factory.

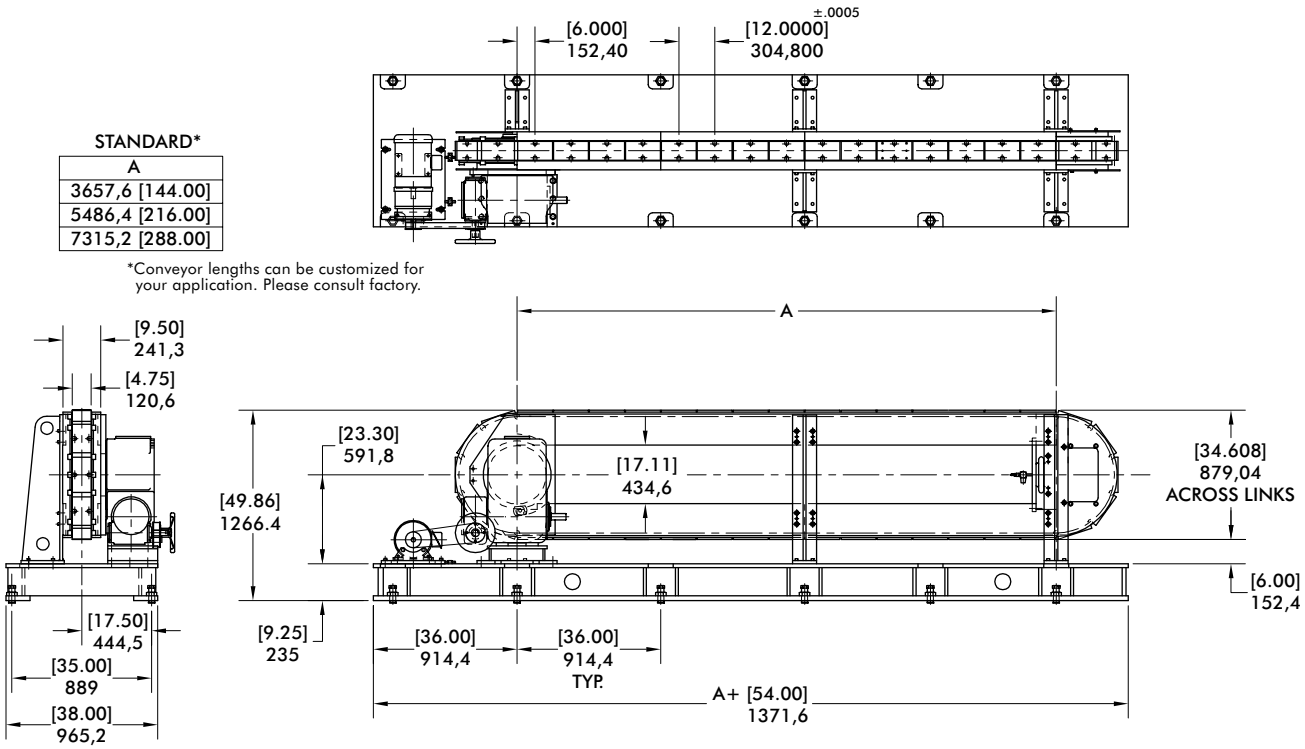

LINEAR PART HANDLER

Gripper Mounting Accessory

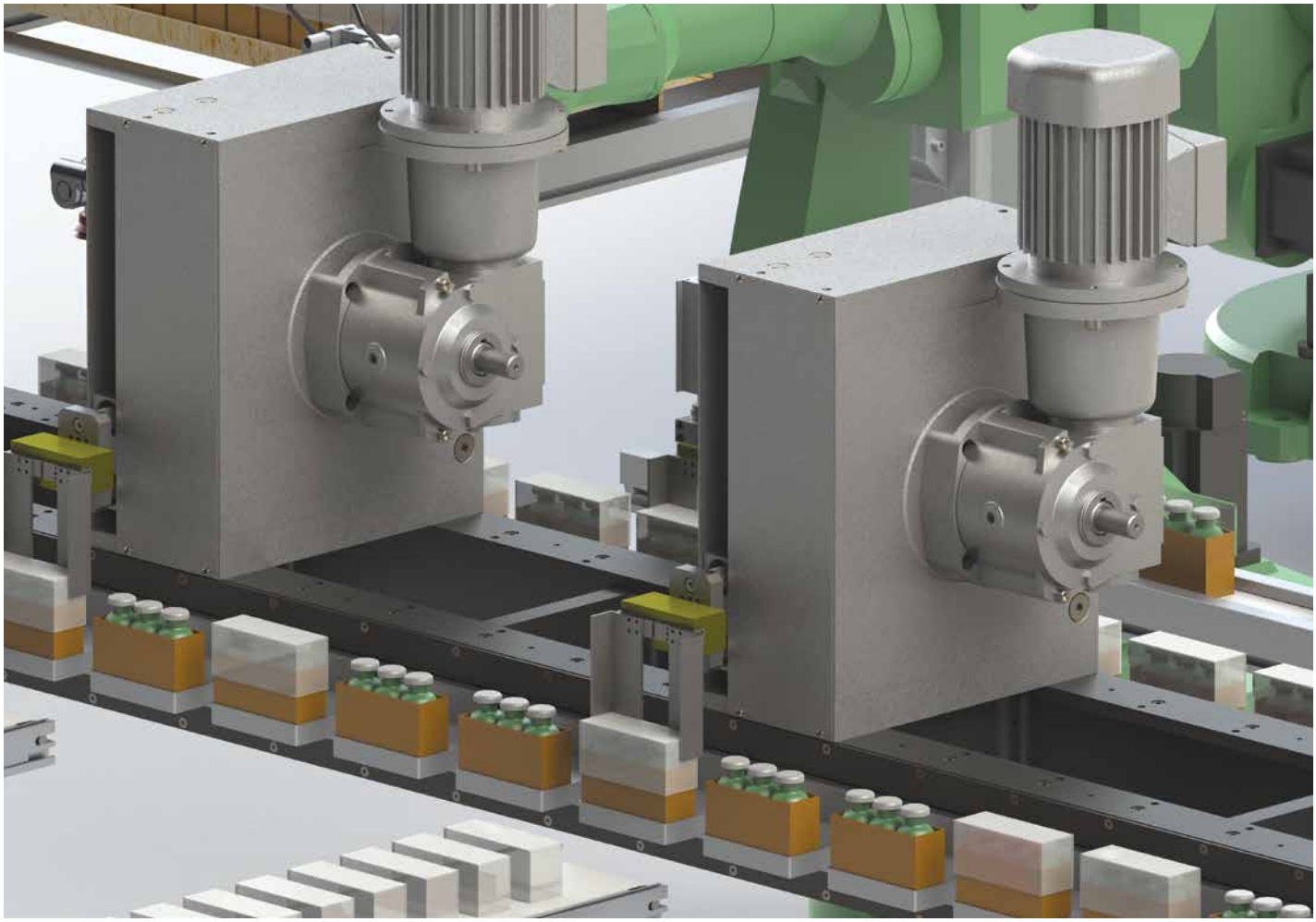

Indexer driving a conveyor and Linear Part Handlers

- Operation can be asynchronous (cycle on demand) – a single index followed by a variable dwell time, or the operation can be continuous.
- Index motion time is changed by changing the motion profile of the servo motor.
- Dwell time is variable. Single axis servo or multiple axis servo controllers can be used.
- More than 60 cycles per minute – maximum cycle rate can be determined by your application engineer.

LINEAR PART HANDLER



Features:

CAMCO Cambot® Linear Parts Handlers, combined with other DESTACO products, offer a low maintenance, cost-effective solution for a complete parts handling package.

Cost effective design for low-cost operation
- Reliable CAMCO mechanical cam design
- Lubed for Life

Easy integration with other DESTACO products for one-stop shopping
- Camco Modular Precision Link Conveyors and Ring Drives
- DESTACO Vacuum products
- Robohand Direct Connect™ Grippers (no adapter plates) and E-Gripper

Customized for your application
- Input shaft available on either side for ease of integration
- Line shaft drive or gear reducer and motor drive package for synchronous or asynchronous operation

Standard or custom strokes and timing designed for your specific requirements

Applications:

Automated production systems with small parts transfer such as consumer products, electronics, and medical device assembly and test.

Table of Contents

How to Order 3

M100/M150 5

Gripper Mounting Block 6

LINEAR PART HANDLER

How To Order

LPP Ordering Procedure

1. Model
2. Lift (Vertical) Stoke
3. Transfer (Horizontal) Stroke

Standard Strokes: Lift x Transfer mm [in]	
M100	**M150**
15.0 [0.59] x 100 [3.94]	15 [0.59] x 150 [5.91]
45 [1.77] x 100 [3.94]	45 [1.77] x 150 [5.91]
65 [2.56] x 20 [0.79]	75 [2.95] x 50 [1.97]
65 [2.56] x 60 [2.36]	75 [2.95] x 110 [4.33]
65 [2.56] x 100 [3.94]	75 [2.95] x 150 [5.91]

4. Output Sequence (Standard or Custom)

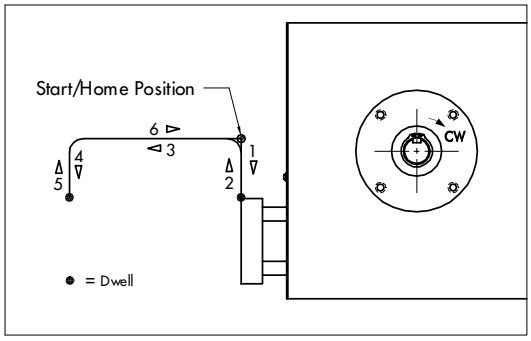

5. Drive Page including Gear Reducer, Motor, and AC Drive

Model	Gear Reducer	AC Motor	1 hp AC Drive Input Voltage (select 1)		
M100	R180	1/3 hp	120 VAC	240 VAC	480 VAC
M150	R225	3/4 hp	120 VAC	240 VAC	480 VAC

LINEAR PART HANDLER

Mounting Position

OHUI (output horizontal, under input)	OHOI (output horizontal, over input)	OHID (output horizontal, input down)	OHIU (output horizontal, input up)	VU (output vertical up)	VD (output vertical down)
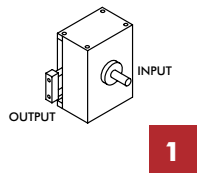 1	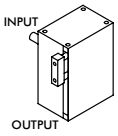 2	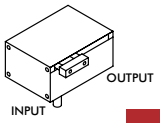 3	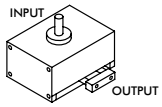 4	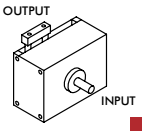 5	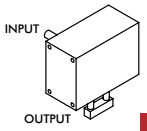 6

Gear Reducer Mounting Positions

	Mounting "A"		Mounting "B"	
	RH	LH	RH	LH
SIDE 1	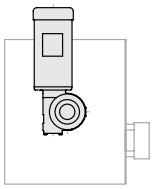 A	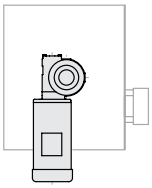 B	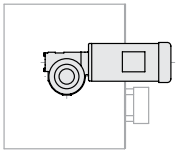 C	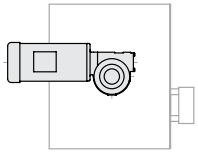 D
SIDE 2	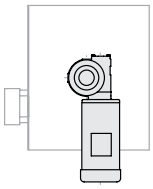 E	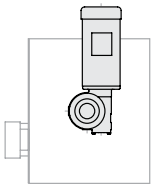 F	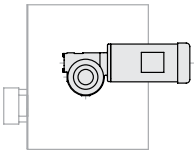 G	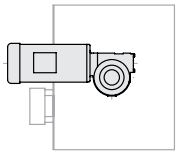 H

	Mounting "C"		Mounting "D"	
	RH	LH	RH	LH
SIDE 1	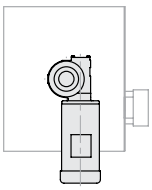 J	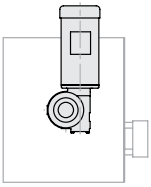 K	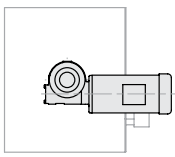 L	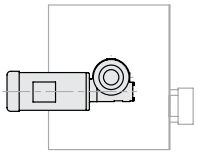 M
SIDE 2	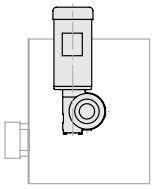 N	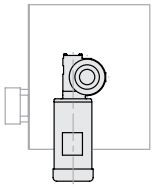 P	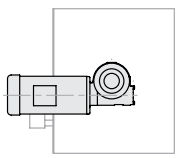 R	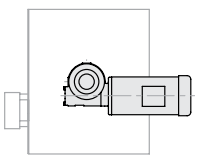 S

M100/M150 SERIES

Linear Part Handler | Dimensions and Technical Information

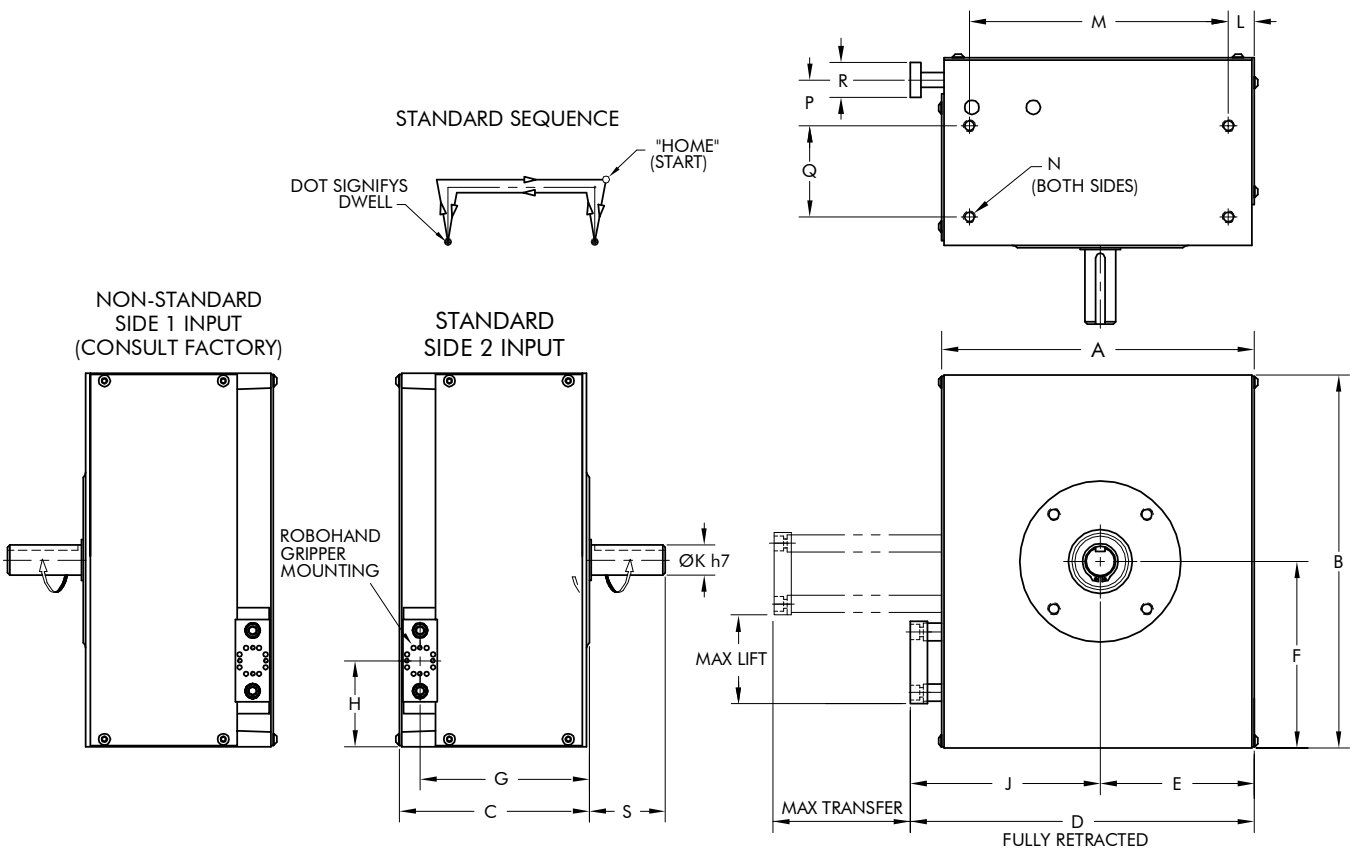

Model	A	B	C	D	E	F	G	H	J	K	L	M	N	P	Q	R	S
M100	[9.88] 251.0	[11.42] 290.0	[5.71] 145.0	[11.01] 279.7	[4.84] 123.0	[5.71] 145.0	[5.12] 130.0	[2.56] 65.0	[6.18] 157.0	[0.98] 25.0	[0.47] 12.0	[8.86] 225.0	4 x M8	[1.57] 40.0	[2.56] 65.0	[1.00] 25.4	[1.97] 50.0
M150	[13.07] 332.0	[15.75] 400.0	[6.69] 170.0	[14.41] 366.0	[6.30] 160.0	[7.87] 200.0	[5.83] 148.0	[3.54] 90.0	[8.11] 206.0	[1.18] 30.0	[0.59] 15.0	[11.81] 300.0	4 x M10	[1.57] 40.0	[3.15] 80.0	[2.01] 51.0	[2.17] 55.0

Technical Specifications				
Model	Maximum Lift mm [in]	Maximum Transfer mm [in]	Capacity at 30 rpm kg [lb]	Capacity at 60 rpm kg [lb]
M100	65.0 [2.56]	100.0 [3.94]	8 [18]	3.6 [8]
M150	75.0 [2.95]	150.0 [5.91]	18 [40]	9 [20]

Model	Lift		Transfer	
	Accuracy	Repeatability	Accuracy	Repeatability
M100	±.13 mm [±.005 in]	±.03 mm [±.001 in]	±.08 mm [±.003 in]	±.03 mm [±.001 in]
M150	±.20 mm [±.008 in]	±.08 mm [±.003 in]	±.08 mm [±.003 in]	±.03 mm [±.001 in]

Dimensions and technical information are subject to change without notice

Gripper Mounting Block

M100
DIRECTCONNECT

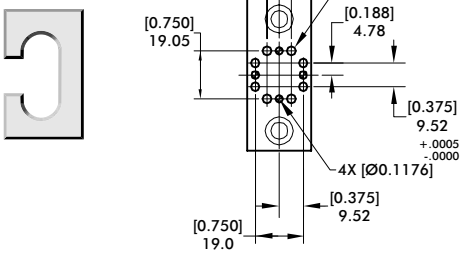

M100
ROBOHAND E-GRIPPER

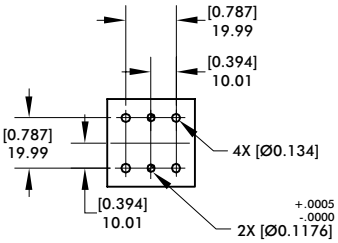

M150
DIRECTCONNECT

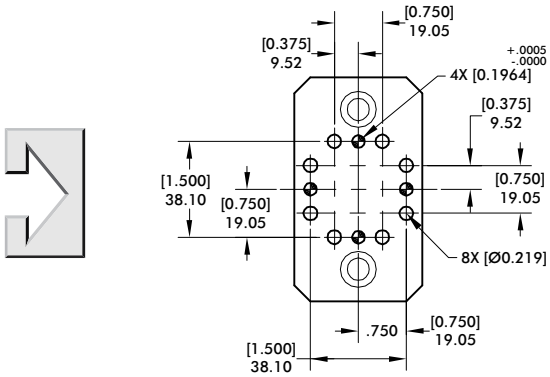

Robohand DirectConnect Grippers & Rotaries

Consult the DESTACO Automation Catalog or your local sales representative for information about these items.

Model	E-Gripper	DPDS/DPDL	DPG	DPP	DPW	DCT	DRF
M100	RPE-100M RPE-101M	DPDS-047M DPDS-056M DPDL-047M DPDL-056M	N/A	DPP-10M-06 DPP-10M-12 DPP-14M-15 DPP-14M-25	DPW-250M-1 DPW-250M-2	DCT-12M DCT-16M DCT-20M	N/A
M150	N/A	DPDS-088M DPDS-125M DPDL-088M DPDL-125M	DPG-10M-1 DPG-10M-2 DPG-10M-3 DPG-10M-4	DPP-20M-25 DPP-20M-28 DPP-28M-31 DPP-28M-50	DPW-375M-1 DPW-375M-2 DPW-500M-1 DPW-500M-2	DCT-25M	DRF/DRG-075M DRF/DRG-094M DRF/DRG-106M

ROTARY PART HANDLER

Product Overview

INDEXERS

Servo Positioners



GTB Series
Globoidal (Roller Gear)
Servo Positioner.....IN-SRV-1



RSD Series
Rotary Servo Drives.....IN-SRV-39

Mechanical Indexers



RDM Series
Rotary Index Drive IN-MCH-2



RD Series
Roller Dial Index Drive..... IN-MCH-18



E Series
Heavy-Duty Index Drive IN-MCH-30



RA Series
Right Angle Index Drive IN-MCH-42



RGD/RGS Series
Roller Gear Index Drive IN-MCH-52



P Series
Parallel Shaft/Flange Drive.... IN-MCH-72



RNG Series
Ring Drive Dial Indexer.....IN-MCH-84

OVERLOAD CLUTCHES



Overload Clutches
Output Overload..... IN-CLU-1

CUSTOM CAMS



Custom Cams
Cam Design Solutions IN-CAM-1

CONVEYORS



Rite-Link Series
Thin-Profile.....IN-CNV-1



Precision Link Series
Table-Top IN-CNV-4



Precision Link Series
Heavy-Duty IN-CNV-16

PARTS HANDLERS



LPP Series
Linear Part Handlers IN-PRT-2



RPP Series
Rotary Part Handlers IN-PRT-8

Dimensions and technical information are subject to change without notice

ROTARY PART HANDLER



Features:

The **CAMCO RPP Cambot® Rotary Parts Handler** is designed for high precision and high capacity. This proven design can be used in a wide variety of industries including automotive, packaging and electronics among others. The RPP can be combined with other CAMCO products such as index drives and precision conveyors for a complete, automated system. The RPP is ideal for pick and place applications with features including:

Rugged and precise cam operated mechanisms engineered for a minimum of 8000 hours of maintenance-free life.

Hardened and ground cams drive both the lift and rotary axes.

Preloaded precision cam followers eliminate backlash and ensure smooth movement.

Preloaded taper roller bearings on the camshaft (Input Shaft).

Four-point contact preloaded roller bearing on the rotary axis.

All bearings are lubricated by an oil bath.

One-piece lift arm.

Ball bushings (recirculating-ball type) support the main lift shaft and turn the large output surface and ride on hardened shafts for stability and stiffness.

Manufactured in a fully integrated application, design, manufacturing and inspection environment.

Table of Contents

How to Order 3

300RPP 5

500RPP 7

Timing Diagrams..... 9

ROTARY PART HANDLER

How to Order

RPP Ordering Procedure

1. Model
2. Rotary Motion (degrees)
   - Oscillator or indexer
   - Oscillator: Home at X or Y
   - Indexer: CW or CCW index
3. Lift (inches)
4. Input Shaft: Side 1, Side 2 or Double Input (DI)
5. Mounting Position: 1-6

Reducer Ordering Procedure

1. Reducer Model, Ratio and Mounting Position
2. Motor Adaptor Model
3. Motor size

Input Shaft Configuration

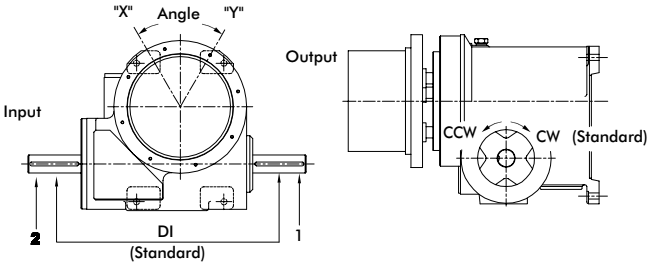

Standard Output Sequence



Dimensions and technical information are subject to change without notice

ROTARY PART HANDLER

Mounting Position

OVOI (output vertical, over input)	OVUI (output vertical, under input)	OHOI (output horizontal, over input)	OHUI (output horizontal, under input)	H-S1-UP (output horizontal, side 1 up)	H-S2-UP (output horizontal, side 2 up)
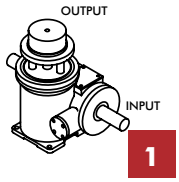 1	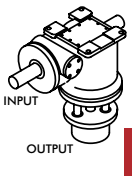 2	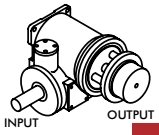 3	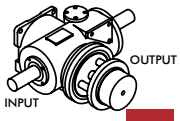 4	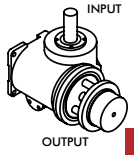 5	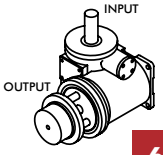 6

Gear Reducer Mounting Positions

	Mounting "A"		Mounting "B"	
	RH	LH	RH	LH
SIDE 1	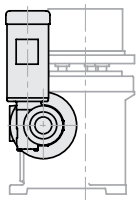 A	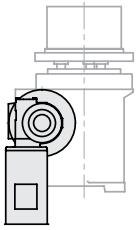 B	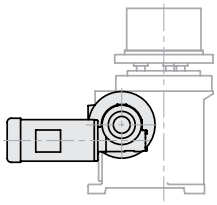 C	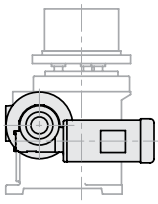 D
SIDE 2	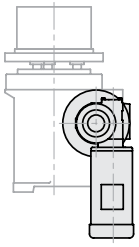 E	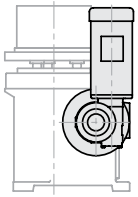 F	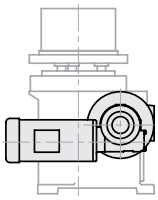 G	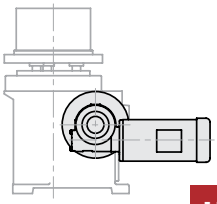 H

	Mounting "C"		Mounting "D"	
	RH	LH	RH	LH
SIDE 1	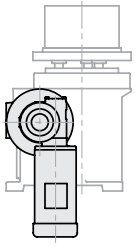 J	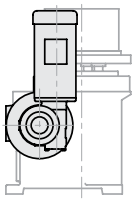 K	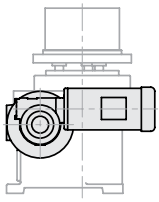 L	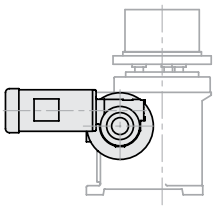 M
SIDE 2	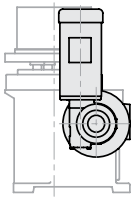 N	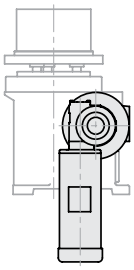 P	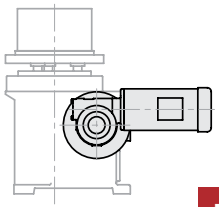 R	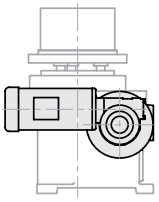 S

300RPP SERIES

Rotary Part Handler | Configurations

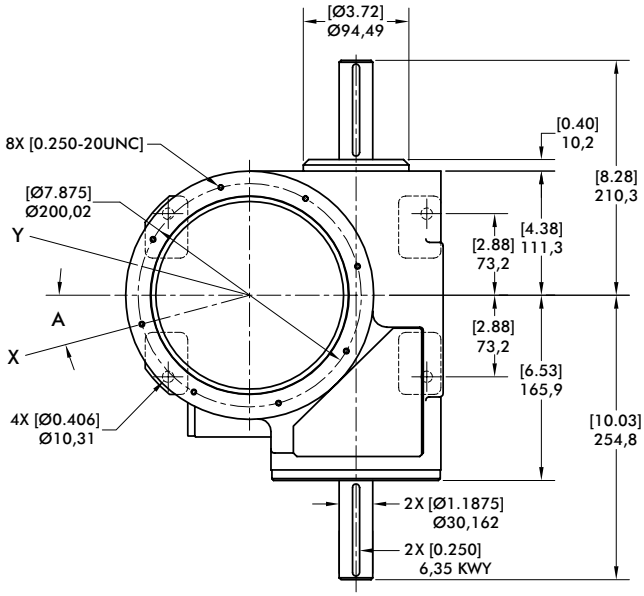

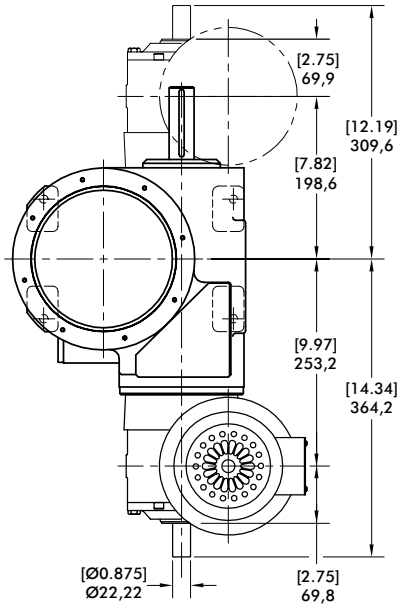

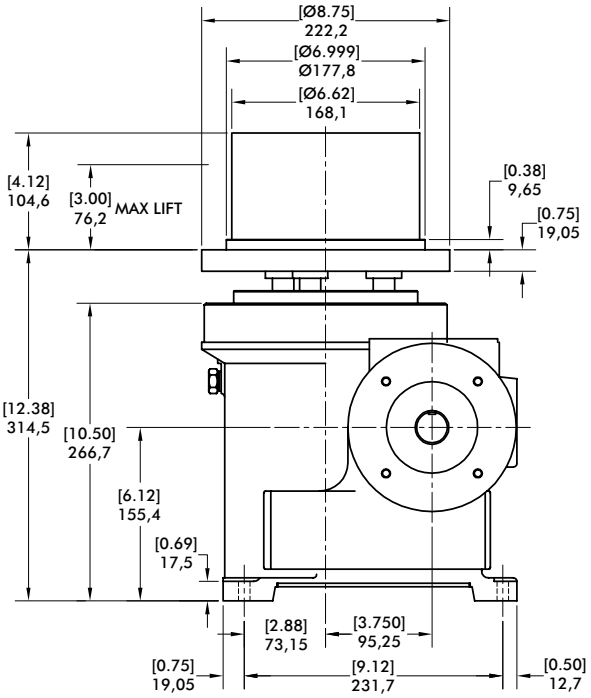

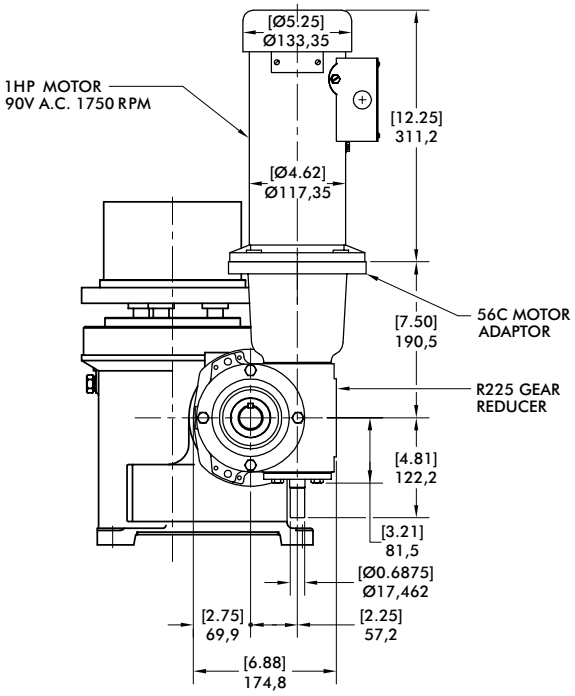

Dimensions and technical information are subject to change without notice

Indexing Motion			
Rotation	**Angle A**	**Lift** mm [in]	**Model**
120°	0°	25,4 [1]	300RPP120H24-1H24
		50,8 [2]	300RPP120H24-2H24
90°	15°	25,4 [1]	300RPP90H24-1H24
		50,8 [2]	300RPP90H24-2H24
		76,2 [3]	300RPP90H24-3H24
60°	0°	25,4 [1]	300RPP60H24-1H24
		50,8 [2]	300RPP60H24-2H24
		76,2 [3]	300RPP60H24-3H24
45°	22.5°	25,4 [1]	300RPP45H24-1H24
		50,8 [2]	300RPP45H24-2H24
		76,2 [3]	300RPP45H24-3H24

Oscillating Motion			
Rotation	**Angle A**	**Lift** mm [in]	**Model**
180°	0°	25,4 [1]	300RPP2H24-1H24
		50,8 [2]	300RPP2H24-2H24
		76,2 [3]	300RPP2H24-3H24
120°	0°	25,4 [1]	300RPP3H24-1H24
		50,8 [2]	300RPP3H24-2H24
		76,2 [3]	300RPP3H24-3H24
90°	0°	25,4 [1]	300RPP4H24-1H24
		50,8 [2]	300RPP4H24-2H24
		76,2 [3]	300RPP4H24-3H24
60°	0°	25,4 [1]	300RPP6H24-1H24
		50,8 [2]	300RPP6H24-2H24

Features

- Standard Indexing or Oscillating Motion
- R225 Reducer (Ratios from 5:1 to 60:1)
  — 56C Motor Adapter and Coupling
- 1 HP AC Drive Package with Inverter Duty Motor and Inverter Drive (up to 60 cpm)

Optional Accessories

- 1 HP DC Motor
- Varipak DC Motor Control (up to 30 cpm)

Capacity:*

Maximum Mass	68,04 kg [150 lbm]
Maximum Inertia	4975 kg-cm² [1700 lb-in²]

* Note: These values are for speeds of less than 30 rpm, the minimum cam time for rise and rotation, and are for reference only. Each application must be reviewed and approved by CAMCO Engineering.

500RPP SERIES

Rotary Part Handler | Configurations

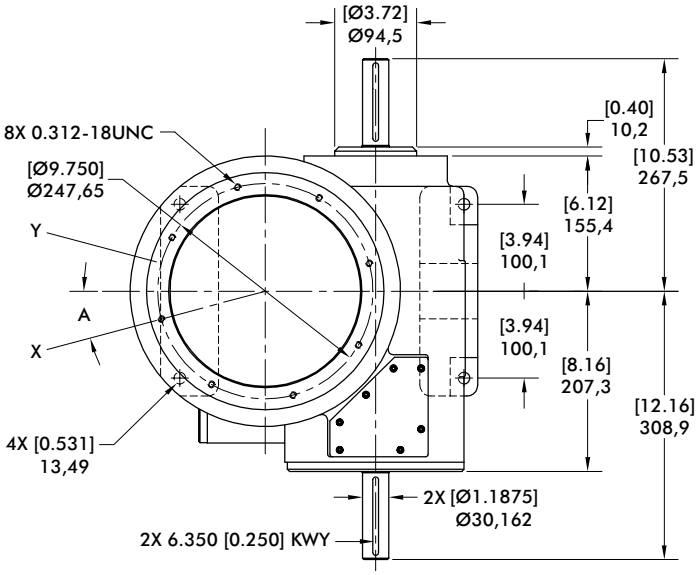

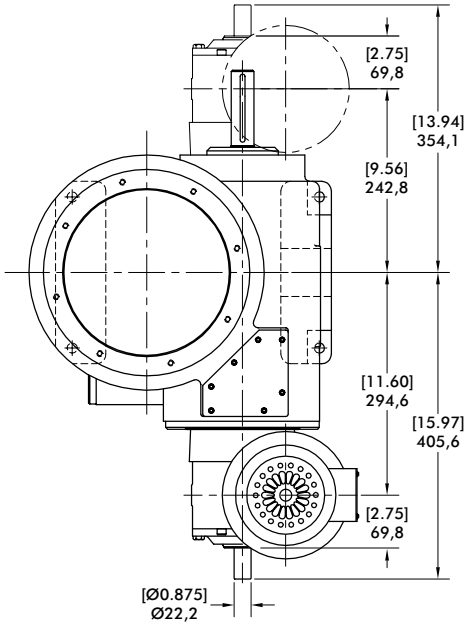

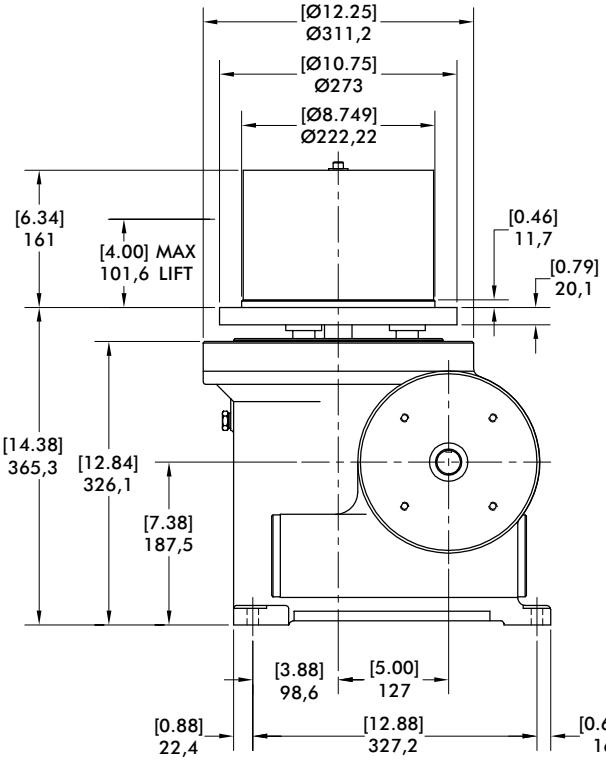

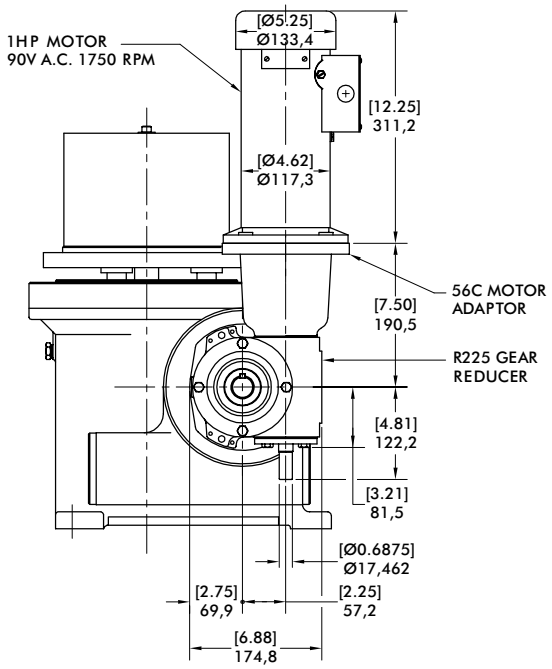

Dimensions and technical information are subject to change without notice

Indexing Motion			
Rotation	**Angle A**	**Lift** mm [in]	**Model**
180°	0°	50,8 [2]	500RPP2H32-2H32
		76,2 [3]	500RPP2H32-3H32
		101,6 [4]	500RPP2H32-4H32
120°	0°	50,8 [2]	500RPP3H32-2H32
		76,2 [3]	500RPP3H32-3H32
		101,6 [4]	500RPP3H32-4H32
90°	0°	50,8 [2]	500RPP4H32-2H32
		76,2 [3]	500RPP4H32-3H32
		101,6 [4]	500RPP4H32-4H32
60°	0°	50,8 [2]	500RPP6H32-2H32
		76,2 [3]	500RPP6H32-3H32
		101,6 [4]	500RPP6H32-4H32

Oscillating Motion			
Rotation	**Angle A**	**Lift** mm [in]	**Model**
120°	0°	50,8 [2]	500RPP120H32-2H32
		76,2 [3]	500RPP120H32-3H32
90°	15°	50,8 [2]	500RPP90H32-2H32
		76,2 [3]	500RPP90H32-3H32
		101,6 [4]	500RPP90H32-4H32
60°	0°	50,8 [2]	500RPP60H32-2H32
		76,2 [3]	500RPP60H32-3H32
		101,6 [4]	500RPP60H32-4H32
45°	22.5°	50,8 [2]	500RPP45H32-2H32
		76,2 [3]	500RPP45H32-3H32
		101,6 [4]	500RPP45H32-4H32

Features

- Standard Indexing or Oscillating Motion
- R225 Reducer (Ratios from 5:1 to 60:1)
  — 56C Motor Adapter and Coupling
- 1 hp AC Drive Package with Inverter Duty Motor and Inverter Drive (up to 60 cpm)

Optional Accessories

- 1 hp DC Motor
- Varipak DC Motor Control (up to 30 cpm)

Capacity:*

Maximum Mass	81,65 kg [180 lbm]
Maximum Inertia	9204 kg-cm² [3145 lb-in²]

Capacity:*

Maximum Mass	180 lbs
Maximum Inertia	3415 lb-in²

* Note: These values are for speeds of less than 30 rpm, the minimum cam time for rise and rotation, and are for reference only. Each application must be reviewed and approved by CAMCO Engineering.

ROTARY PART HANDLER

Oscillator Timing Diagram

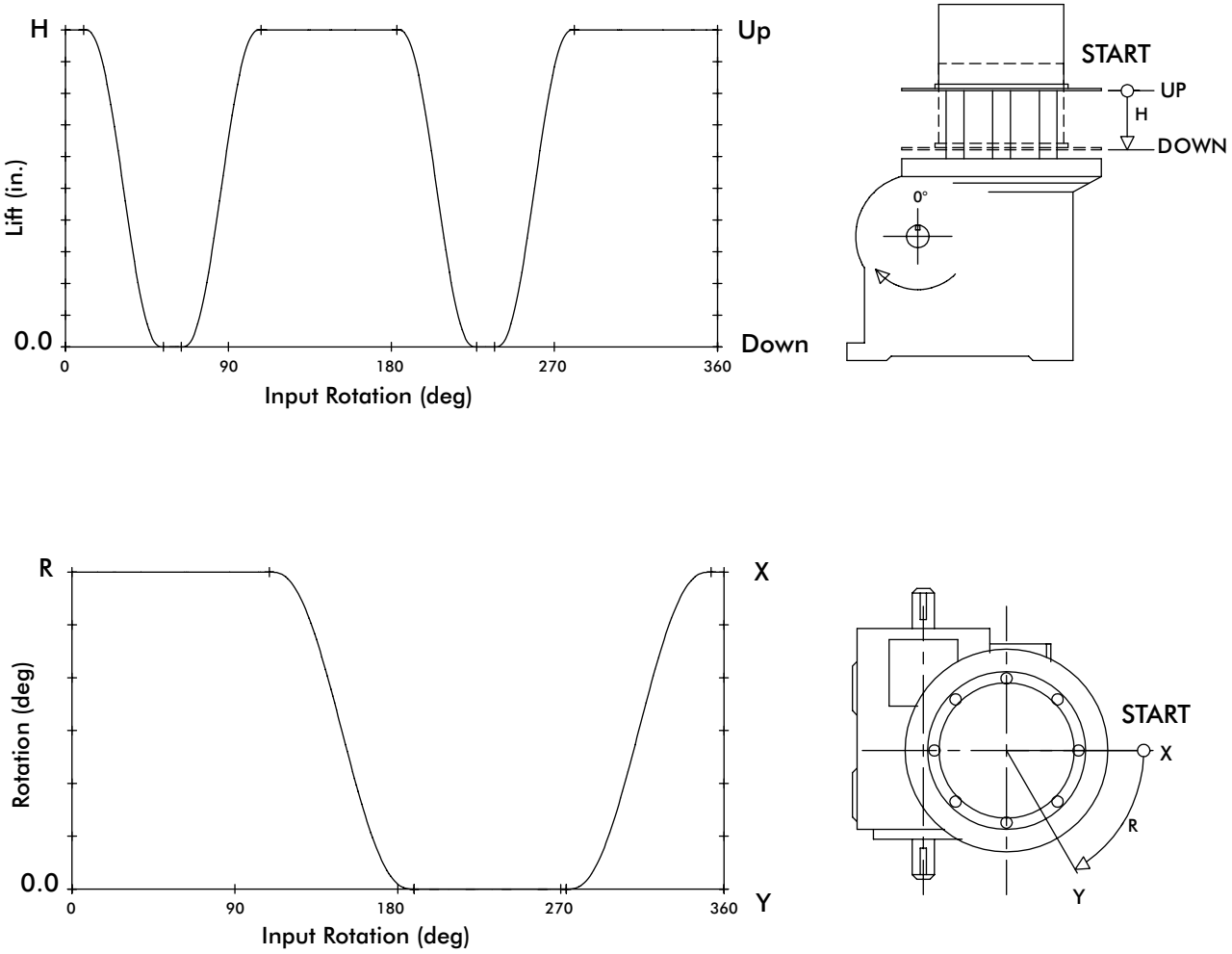

Motion Options

- Standard starting position (home) at time 0 is at maximum rise (up) and at the X rotary position.
- The standard sequence can be mirrored in either the lift, rotary or both:
  - — The mirrored lift starts in the zero elevation or down position
  - — The mirrored rotary motion starts at Y.
- Custom motion times are also available – consult your Sales Agent for more information.

Indexer Timing Diagram

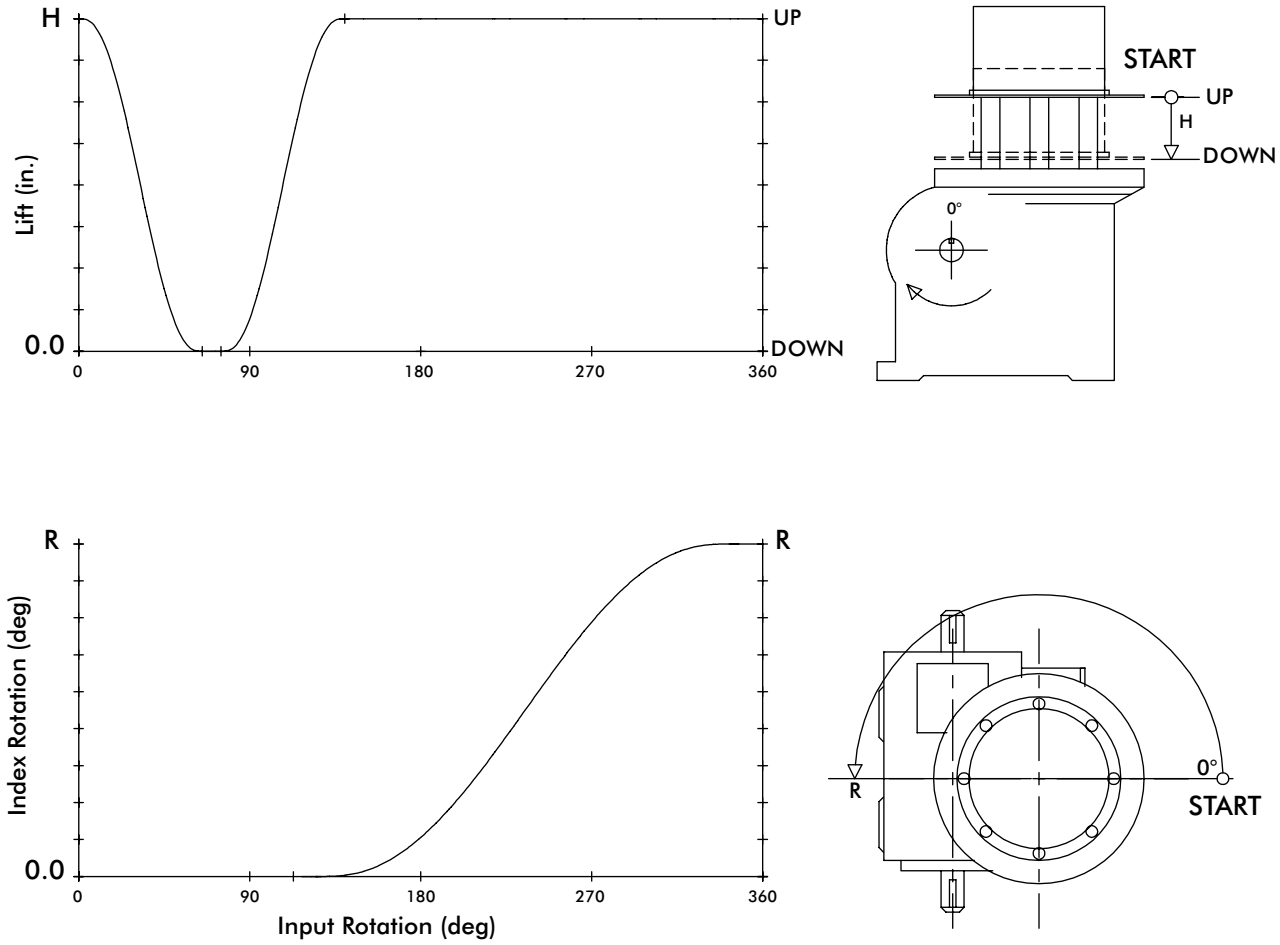

Motion Options

- Standard starting position (home) at time 0 is at maximum rise (up) and at the start of a counter-clockwise index (right-hand cam helix).
- The standard sequence can be mirrored in either the lift, rotary or both:
  - — The mirrored lift starts in the zero elevation or down position
  - — The mirrored rotary motion is a clockwise index (left-hand helix)
- Custom motion times are also available – consult your Sales Agent for more information.

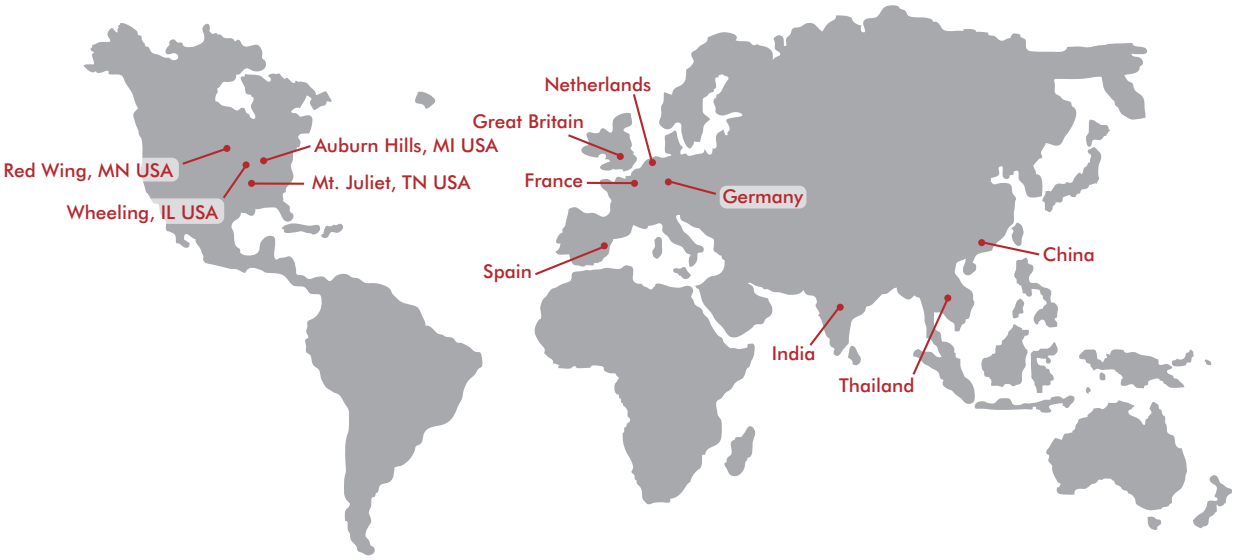

GLOBAL LOCATIONS

NORTH AMERICA

Corporate Headquarters
Auburn Hills, Michigan
Toll Free: 1.888.DESTACO
Marketing: marketing@destaco.com

Global Technology Center
Auburn Hills, Michigan
Tel: 1.248.836.6700
Customer Service: customerservice@destaco.com

Mt. Juliet, Tennessee
Tel: 1.888.DESTACO
Customer Service: customerservice@destaco.com

Wheeling, Illinois
Tel: 1.800.645.5207
Customer Service: camco@destaco.com

Red Wing, Minnesota (Central Research Laboratories)
Tel: 651.385.2142
Customer Service: sales@centres.com

ASIA

Thailand
Tel: +66-2-326-0812
Customer Service: info@destaco.com

China
Tel: +86-21-6081-2888
Customer Service: china@destaco.com

India
Tel: +91-80-41123421-426
Customer Service: india@destaco.com

EUROPE

Germany
Tel: +49-6171-705-0
Customer Service: europe@destaco.com

France
Tel: +33-4-73545001
Customer Service: france@destaco.com

Great Britain
Tel: +44-1902-797980
Customer Service: uk@destaco.com

Spain
Tel: +34-936361680
Customer Service: spain@destaco.com

Netherlands
Tel: +31-297285332
Customer Service: benelux@destaco.com

© Copyright, 2020 DESTACO. All rights for layout, photos and text rest with the publisher DESTACO. All photomechanical or other reproductions only with our express permission. All sales are based on our terms and conditions of sale, delivery and payment.