DIAMOND CASE

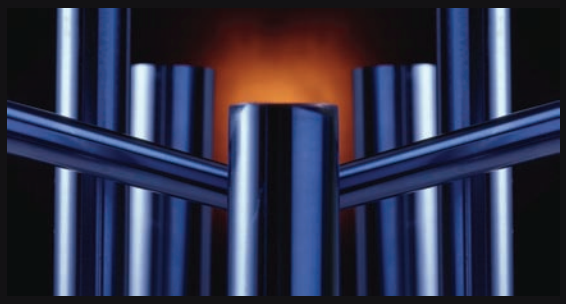

Table of Contents

DIAMOND CASE

CASE HARDENED LINEAR SHAFTING

Carbon (1060) English Sizes

NOMINAL DIAMETER	TOLERANCE GRADE 1 (L)	GRADE 2 (S)	GRADE 3 (N)	GRADE 4 (D)	WEIGHT PER INCH	SURFACE HARDNESS	DEPTH OF HARDNESS	BAR LENGTHS
1/4	.2495 / .2490	.2490 / .2485			.014	60/65 R.C.	.040	144"
3/8	.3745 / .3740	.3740 / .3735			.031	60/65 R.C.	.040	144"
1/2	.4995 / .4990	.4990 / .4985	.5000 / .4998		.055	60/65 R.C.	.060	184"
5/8	.6245 / .6240	.6240 / .6235	.6250 / .6248		.070	60/65 R.C.	.060	184"
3/4	.7495 / .7490	.7490 / .7485	.7500 / .7498		.125	60/65 R.C.	.060	184"
7/8	.8745 / .8740				.170	60/65 R.C.	.060	208"
1	.9995 / .9990	.9990 / .9985	1.0000 / .9998		.222	60/65 R.C.	.080	208"
1-1/8	1.1245 / 1.1240				.282	60/65 R.C.	.080	208"
1-1/4	1.2495 / 1.2490	1.2490 / 1.2485	1.2500 / 1.2498		.348	60/65 R.C.	.080	208"
1-3/8	1.3745 / 1.3740				.421	60/65 R.C.	.080	208"
1-1/2	1.4994 / 1.4989	1.4989 / 1.4984	1.5000 / 1.4997		.500	60/65 R.C.	.080	208"
1-3/4	1.7495 / 1.7490				.681	60/65 R.C.	.100	208"
2	1.9994 / 1.9987	1.9987 / 1.9980	2.0000 / 1.9997	2.0000 / 2.0003	.890	60/65 R.C.	.100	208"
2-1/4	2.2493 / 2.2486				1.127	60/65 R.C.	.100	208"
2-1/2	2.4993 / 2.4985	2.4985 / 2.4977			1.392	60/65 R.C.	.100	208"
3	2.9992 / 2.9983	2.9983 / 2.9974	3.0000 / 2.9996		2.004	60/65 R.C.	.100	208"
3-1/2	3.4990 / 3.4980				2.728	60/65 R.C.	.100	208"
4	3.9988 / 3.9976	3.9976 / 3.9964			3.565	60/65 R.C.	.100	208"

Carbon (1060) Metric Sizes

METRIC DIAMETER	TOLERANCE GRADE M		WEIGHT PER/INCH	SURFACE HARDNESS	HARDNESS	BAR LENGTHS
6	.2362 / .2358		.012	60/65 R.C.	.040	144"
8	.3150 / .3146		.022	60/65 R.C.	.040	144"
10	.3937 / .3933		.035	60/65 R.C.	.040	144"
12	.4724 / .4720		.050	60/65 R.C.	.060	184"
14	.5512 / .5508		.069	60/65 R.C.	.060	184"
16	.6299 / .6295		.088	60/65 R.C.	.060	184"
18	.7087/ .7083		.112	60/65 R.C.	.060	184"
20	.7874 / .7869		.138	60/65 R.C.	.060	184"
25	.9843 / .9838		.216	60/65 R.C.	.080	208"
30	1.1811 / 1.1806		.311	60/65 R.C.	.080	208"
32	1.2598 / 1.2593		.349	60/65 R.C.	.081	208"
35	1.3780 / 1.3775		.417	60/65 R.C.	.082	208"
40	1.5748 / 1.5743		.553	60/65 R.C.	.080	208"
45	1.7717 / 1.7710		.698	60/65 R.C.	.080	208"
50	1.9685 / 1.9679		.864	60/65 R.C.	.100	208"
60	2.3622 / 2.3615		1.240	60/65 R.C.	.100	208"
63	2.4803 / 2.4799		1.343	60/65 R.C.	.100	208"
80	3.1496 / 3.1489		2.210	60/65 R.C.	.100	208"
100	3.9370 / 3.9363		3.397	60/65 R.C.	.100	208"

ISO 9001 : 2000 REGISTERED FIRM

PH 1.800.293.2496 ■ FX 1.888.338.2388 ■ www.diamond-case.com

DIAMOND CASE

CASE HARDENED LINEAR SHAFTING

Stainless (440C) English Sizes

NOMINAL DIAMETER	TOLERANCE S.S. GR-1(L)	TOLERANCE S.S. GR-2 (S)			WEIGHT PER/INCH	SURFACE HARDNESS	DEPTH OF HARDNESS	BAR LENGTHS
1/2	.4995 / .4990	.4990 / .4985			.055	50/550R.C	.060	184"
5/8	.6245 / .6240	.6240 / .6235			.086	50/550R.C	.060	184"
3/4	.7495 / .7490	.7490 / .7485			.125	50/550R.C	.060	184"
1	.9995 / .9990	.9990 / .9985			.222	50/550R.C	.080	208"
1-1/4	1.2495 / 1.2490	1.2490 / 1.2485			.348	50/550R.C	.080	208"
1-1/2	1.4994 / 1.4989	1.4989 / 1.4984			.500	50/550R.C	.080	208"
2	1.9994 / 1.9987	1.9987 / 1.9980			.890	50/550R.C	.100	208"

Diamond Case Linear Shafting Specifications:

- **Material-** 1060 or 440C stainless.
- **Dimensional Tolerance-** See previous page.
- **Roundness-** Superior.
- **Cylindricity-** High.
- **Straightness-** .001/.002 TIR cumulative.
- **Surface Finish-** 8 RMS or better.
- **Case Hardness-** See previous page.
- **Depth of Hardness-** See previous page.

Diamond Case Linear Shafting Deliverables:

- **World class quality.**
- **Delivery performance second to none.**
- **Virtually all orders shipped same or next day.**
- **Customer service requests answered immediately.**
- **No need to wait for your answers.**
- **ISO 9001:2000**

ISO 9001 : 2000 REGISTERED FIRM

PH 1.800.293.2496 ■ FX 1.888.338.2388 ■ www.diamond-case.com

DIAMOND CASE

PILLOW BLOCKS

Closed Type

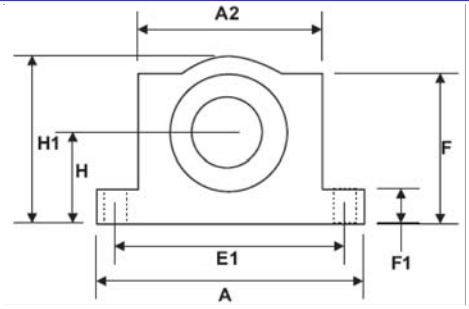

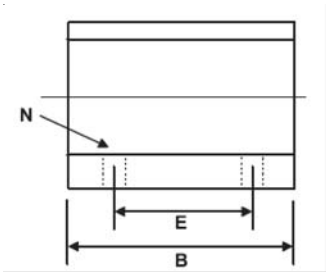

Part Number	Shaft Dia.	H +/- .003	H1	A	A2	B	E +/- .010	E1 +/- .010	F	F1	N Hole	N Bolt	Mass (lb)	Load Rating (lbf)
SPB8	1/2	.687	1.25	2.00	1.38	1.69	1.000	1.688	1.13	.25	.16	#6	.2	255
SPB10	5/8	.875	1.63	2.50	1.75	1.94	1.125	2.125	1.44	.28	.19	#8	.5	450
SPB12	3/4	.937	1.75	2.75	1.86	2.06	1.250	2.375	1.56	.31	.19	#8	.6	600
SPB16	1	1.187	2.19	3.25	2.38	2.81	1.750	2.875	1.94	.38	.22	#10	1.2	1,050
SPB20	1-1/4	1.500	2.81	4.00	3.00	3.63	2.000	3.500	2.50	.44	.22	#10	2.5	1,500
SPB24	1-1/2	1.750	3.25	4.75	3.50	4.00	2.500	4.125	2.88	.50	.28	1/4	3.8	2,000

Open Type

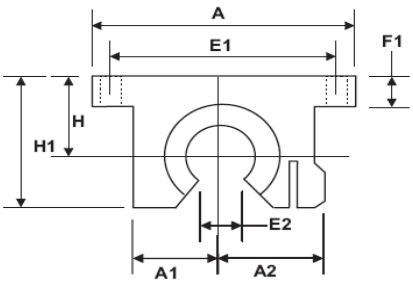

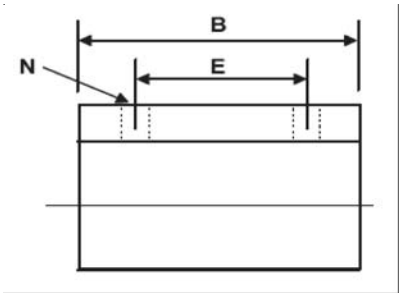

Part Number	Shaft Dia.	H +/- .003	H1	A	A1	A2	B	E +/- .010	E1 +/- .010	E2	F1	N Hole	N Bolt	Mass (lb)	Load Rating (lbf)
SPB8OPN	1/2	.687	1.13	2.00	.69	.75	1.50	1.000	1.688	.31	.25	.16	#6	.2	230
SPB10OPN	5/8	.875	1.44	2.50	.88	.94	1.75	1.125	2.125	.37	.28	.19	#8	.4	320
SPB12OPN	3/4	.937	1.56	2.75	.94	1.00	1.88	1.250	2.375	.43	.31	.19	#8	.5	470
SPB16OPN	1	1.187	2.00	3.25	1.19	1.25	2.63	1.750	2.875	.56	.38	.22	#10	1.0	780
SPB20OPN	1-1/4	1.500	2.56	4.00	1.50	1.63	3.38	2.000	3.500	.62	.44	.22	#10	2.1	1,170
SPB24OPN	1-1/2	1.750	2.94	4.75	1.75	1.88	3.75	2.500	4.125	.75	.50	.28	1/4	3.2	1,560

* Load ratings are based upon 2 million inches of travel and a shaft hardness of HRC 60 or more. The actual load rating is dependant upon the direction of the applied load relative to the bearing's ball track locations. See the polar charts in the Diamond Case self-aligning bearing catalog for appropriate derating factors. Open and closed pillow blocks include bearings with seals on both ends.

ISO 9001 : 2000

DIAMOND CASE

SELF-ALIGNING LINEAR BEARINGS

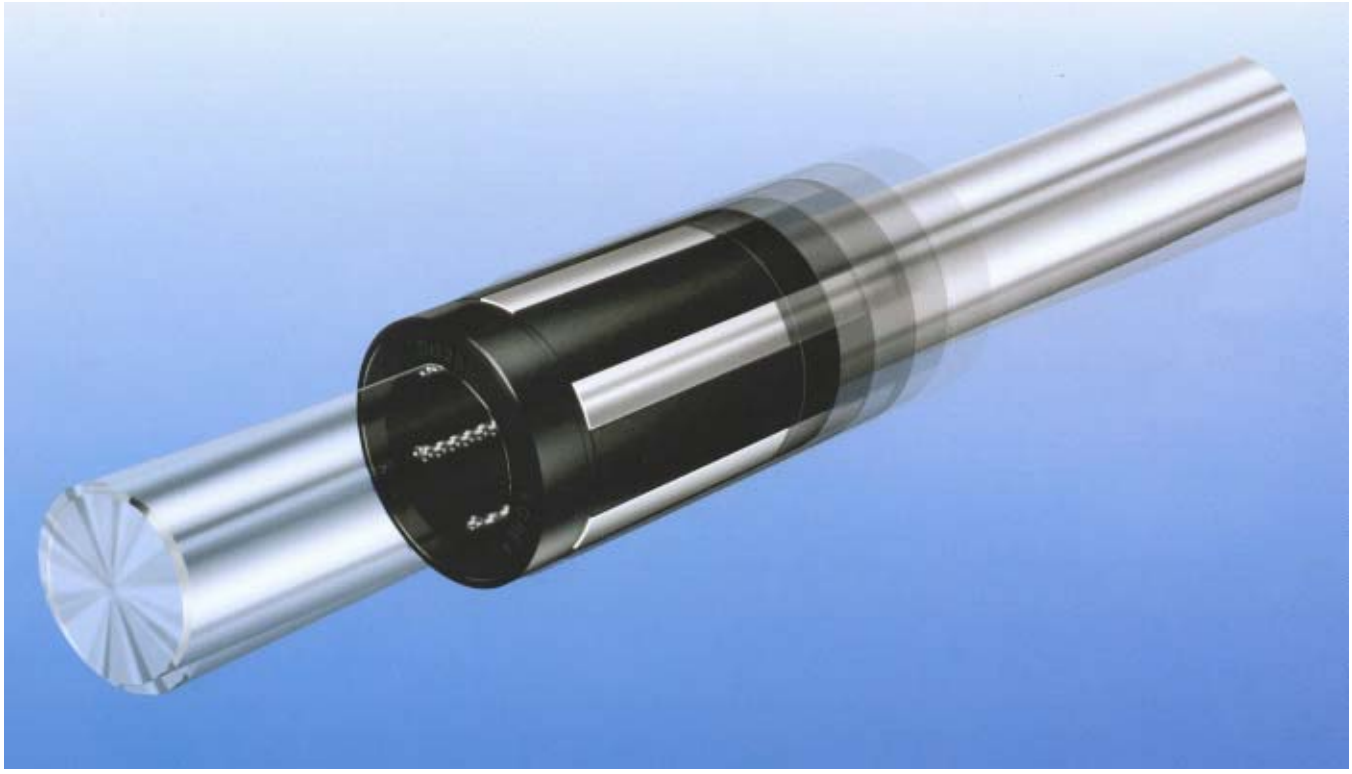

Diamond Case High Load Capacity, Self-Aligning Series Linear Ball Bearings provide you with the following:

- Conformance to industry standards.
- 3 times more load capacity than conventional linear bearings-Allows for smaller, less expensive bearings to carry the required load.
- Integral seals-Reduces space requirements while keeping lubrication in and contamination out of the bearing.
- Independently self-aligning outer bearing races-Ensures smooth running bearings by absorbing misalignment up to 1/2 degree.

ISO 9001 : 2000

PH 1.800.293.2496 ■ FX 1.888.338.2388 ■ www.diamond-case.com

DIAMOND CASE

SELF-ALIGNING LINEAR BEARINGS

Closed Type

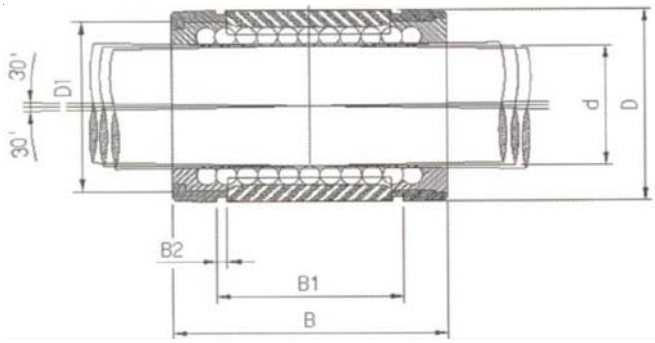

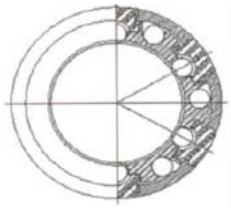

Part Number w/o Seal	Part Number with Seal	Nominal Shaft Diameter	Number Ball Circuits	Housing Bore Diameter D	D1	B	B1	B2	Max. Load Capacity (Lbf)
SU6	SU6DD	.375	4	0.6255/0.6250	0.5880	0.875/0.860	0.699/.0689	0.039	105
SU8	SU8DD	.500	4	0.8755/0.8750	0.8209	1.250/1.230	1.032/1.012	0.050	265
SU10	SU10DD	.625	5	1.1255/1.1250	1.0700	1.500/1.480	1.105/1.095	0.056	420
SU12	SU12DD	.750	6	1.2505/1.2500	1.1760	1.625/1.605	1.270/1.250	0.056	640
SU16	SU16DD	1.000	6	1.5630/1.5625	1.4900	2.250/2.230	1.884/1.864	0.068	1045
SU20	SU20DD	1.250	6	2.0008/2.0000	1.8890	2.625/2.600	2.004/1.984	0.068	1585
SU24	SU24DD	1.500	6	2.3760/2.3750	2.2389	3.000/2.970	2.410/2.390	0.086	1930

Open Type

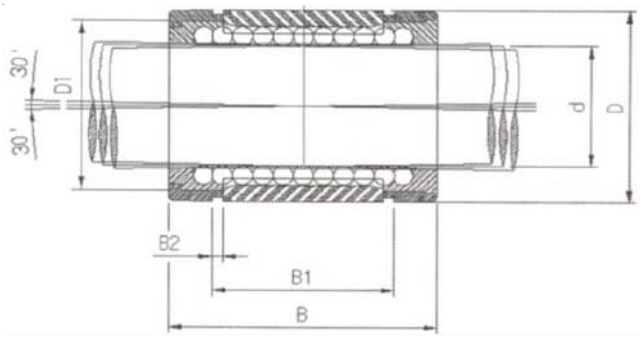

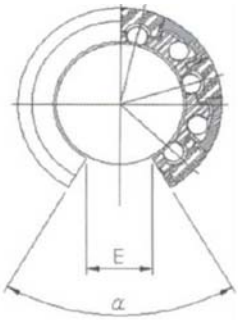

Part Number w/o Seal	Part Number with Seal	Nominal Shaft Diameter	No. Ball Circuits	Housing Bore Diameter D	D1	B	B1	B2	E	α (deg)	Max Load Rating (Lbf)
SU8OPN	SU8OPNDD	.500	3	0.8755/0.8750	0.8209	1.250/1.230	1.032/1.012	0.050	0.32	30	265
SU10OPN	SU10OPNDD	.625	4	1.1255/1.1250	1.0700	1.500/1.480	1.105/1.095	0.056	0.38	30	420
SU12OPN	SU12OPNDD	.750	5	1.2505/1.2500	1.1760	1.625/1.605	1.270/1.250	0.056	0.43	30	640
SU16OPN	SU16OPNDD	1.000	5	1.5630/1.5625	1.4900	2.250/2.230	1.884/1.864	0.068	0.56	30	1045
SU20OPN	SU20OPNDD	1.250	5	2.0008/2.0000	1.8890	2.625/2.600	2.004/1.984	0.068	0.63	30	1585
SU24OPN	SU24OPNDD	1.500	5	2.3760/2.3750	2.2389	3.000/2.970	2.410/2.390	0.086	0.75	30	1930

ISO 9001 : 2000

DIAMOND CASE

TWIN PILLOW BLOCKS

Closed Type

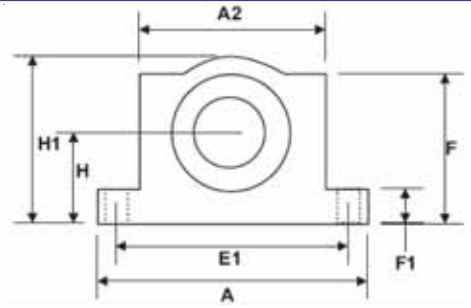

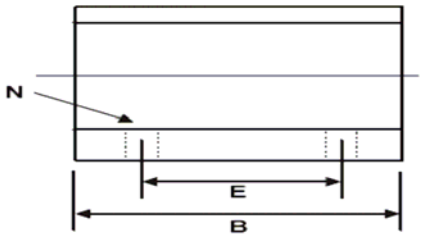

Part Number	Shaft Dia.	H +/- .003	H1	A	A2	B	E +/- .010	E1 +/- .010	F	F1	N Hole	N Bolt	Mass (lb)	Load Rating (lbf)
TWN8	1/2	.687	1.25	2.00	1.38	3.50	2.50	1.688	1.13	.25	.16	#6	.4	510
TWN10	5/8	.875	1.63	2.50	1.75	4.00	3.00	2.125	1.44	.28	.19	#8	1.0	900
TWN12	3/4	.937	1.75	2.75	1.86	4.50	3.50	2.375	1.56	.31	.19	#8	1.2	1200
TWN16	1	1.187	2.19	3.25	2.38	6.00	4.50	2.875	1.94	.38	.22	#10	2.4	2100
TWN20	1-1/4	1.500	2.81	4.00	3.00	7.50	5.50	3.500	2.50	.44	.22	#10	5.00	3000
TWN24	1-1/2	1.750	3.25	4.75	3.50	9.00	6.50	4.125	2.88	.50	.28	1/4	7.80	4000

Open Type

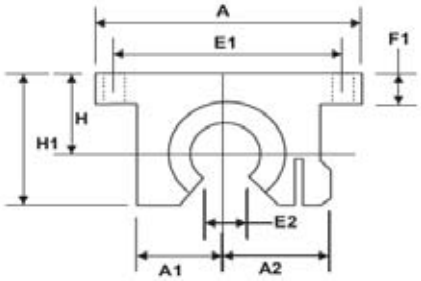

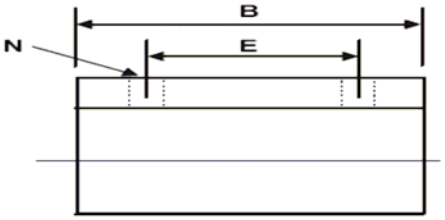

Part Number	Shaft Dia.	H +/- .003	H1	A	A1	A2	B	E +/- .010	E1 +/- .010	E2	F1	N Hole	N Bolt	Mass (lb)	Load Rating (lbf)
TWN8OPN	1/2	.687	1.13	2.00	.69	.75	3.50	2.50	1.688	.31	.25	.16	#6	.4	460
TWN10OPN	5/8	.875	1.44	2.50	.88	.94	4.00	3.00	2.125	.37	.28	.19	#8	.8	60
TWN12OPN	3/4	.937	1.56	2.75	.94	1.00	4.50	3.50	2.375	.43	.31	.19	#8	1.0	940
TWN16OPN	1	1.187	2.00	3.25	1.19	1.25	6.00	4.50	2.875	.56	.38	.22	#10	2.0	1560
TWN20OPN	1-1/4	1.500	2.56	4.00	1.50	1.63	7.50	5.50	3.500	.62	.44	.22	#10	4.2	2340
TWN24OPN	1-1/2	1.750	2.94	4.75	1.75	1.88	9.00	6.50	4.125	.75	.50	.28	1/4	6.7	3120

* Load ratings are based upon 2 million inches of travel and a shaft hardness of HRC 60 or more. The actual load rating is dependant upon the direction of the applied load relative to the bearing's ball track locations. See the polar charts in the Diamond Case self-aligning bearing catalog for appropriate derating factors. Open and closed pillow blocks include bearings with seals on both ends.

DIAMOND CASE

LINEAR BALL BEARINGS

Diamond Case Linear Ball Bearings Provide You With The Following:

- Conformance to industry standards.
- A coefficient of friction as low as 0.001.
- Integral seals that retain lubrication and keep contamination out.
- A broached steel sleeve design for maximum rigidity, precision and smoothness.
- The unparalleled customer service and delivery that our linear shafting products have delivered for nearly 20 years.

ISO 9001 : 2000

PH 1.800.293.2496 ■ FX 1.888.338.2388 ■ www.diamond-case.com

DIAMOND CASE

PRECISION STEEL LINEAR BEARINGS

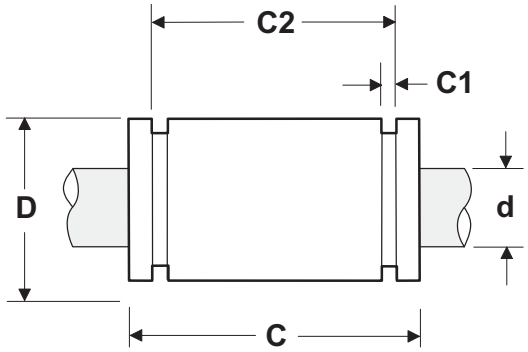

Open Type

Dimensions (Inches)

Part Number		Shaft Dia. d	Outside Dia. D	Length C	Retaining Ring Groove Width C1	Distance Between Retaining Ring Grooves C2	Bearing Mass (lb)	Housing Bore Diameter Norm. fit	Maximum Dynamic Load Capacity (lb) (1)
Without Wipers	With Wipers								
OPN81420	OPN81420DD	.4995/.4990	.8750/.8746	1.250	.046	.967/.951	.07	.8760/.8740	60
OPN122026	OPN122026DD	.7495/.7490	1.2500/1.2496	1.625	.056	1.170/1.154	.17	1.2510/1.2490	140
OPN162536	OPN162536DD	.9995/.9990	1.5625/1.5621	2.250	.068	1.759/1.741	.32	1.5635/1.5615	240
OPN203242	OPN203242DD	1.2495/1.2490	2.0000/1.9995	2.625	.068	2.009/1.991	.90	2.0010/1.9990	400
OPN243848	OPN243848DD	1.4994/1.4989	2.3750/2.3745	3.000	.086	2.415/2.397	1.12	2.3760/2.3740	600
OPN324864	OPN324864DD	1.9940/1.9987	3.0000/2.9994	4.000	.103	3.195/3.177	2.16	3.0010/2.9990	800

1. Load ratings are based upon 2 million inches of travel and a shaft hardness of HRC60 or more. The actual load rating is dependant upon the direction of the applied load relative to the bearing's ball track locations. See the polar charts below for appropriate derating factors.

ALL Open-type bearings have polymer ball retainers

08OPN

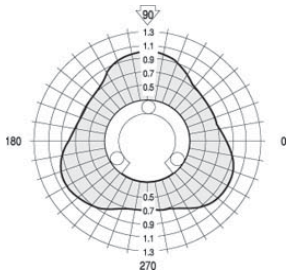

12 & 16OPN

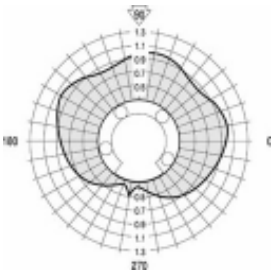

20 - 32OPN

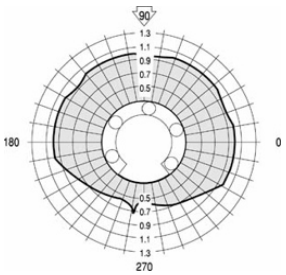

PH 1.800.293.2974 ■ FX 1.888.338.2388 ■ www.diamond-case.com

DIAMOND CASE

PRECISION STEEL LINEAR BEARINGS

Closed Type

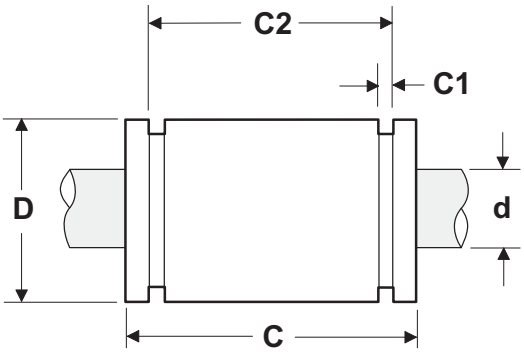

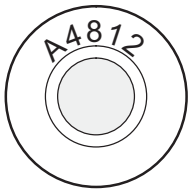

Dimensions (Inches)

Part Number		Shaft Dia. **d**	Outside Dia. **D**	Length **C**	Retaining Ring Groove Width **C1**	Distance Between Retaining Ring Grooves **C2**	Bearing Mass (lb)	Housing Bore Diameter Norm. fit	Maximum Dynamic Load Capacity (lb) (1)
Without Wipers	With Wipers								
A4812	A4812DD	.2490/.2485	.5000/.4996	.750	.039	.515/.499	.02	.5005/.5000	19
A61014	A61014DD	.3740/.3735	.6250/.6246	.875	.039	.640/.624	.06	.6255/.6250	36
A81420	A81420DD	.4990/.4985	.8750/.8746	1.250	.046	.967/.951	.08	.8755/.8750	85
A122026	A122026DD	.7490/.7485	1.2500/1.2496	1.625	.056	1.170/1.154	.21	1.2505/1.2500	200
A162536	A162536DD	.9990/.9985	1.5625/1.5621	2.250	.068	1.759/1.741	.38	1.5630/1.5625	350
A203242	A203242DD	1.2490/1.2485	2.0000/1.9995	2.625	.068	2.009/1.991	1.10	2.0010/2.0000	520
A243848	A243848DD	1.4989/1.4984	2.3750/2.3745	3.000	.086	2.415/2.397	1.43	2.3760/2.3750	770
A324864	A324864DD	1.9987/1.9980	3.0000/2.9994	4.000	.103	3.195/3.177	2.75	3.0010/3.0000	1100

1. Load ratings are based upon 2 million inches of travel and a shaft hardness of HRC60 or more. The actual load rating is dependant upon the direction of the applied load relative to the bearing's ball track locations. See the polar charts below for appropriate derating factors.

A4812, A61014 and ALL bearings with wipers (DD) have polymer ball retainers

04

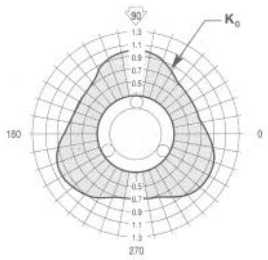

06 - 08

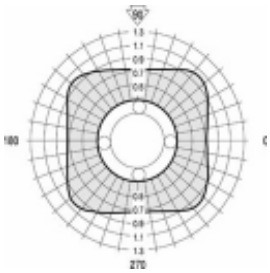

12 - 16

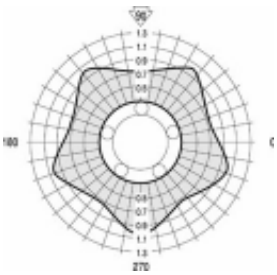

20 - 32

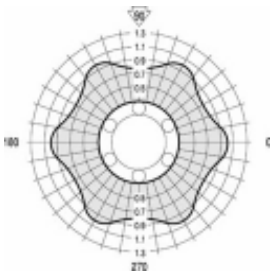

DIAMOND CASE

C.N.C. MACHINING CAPABILITIES

Regardless of the type of machining required, Diamond Case is prepared to offer a quality product, in a timely manner, at competitive prices. Our in-house machining capacity gives us an edge over our competitors who typically outsource their machining requirements.

Please refer to the MP (Machined Parts) letter below. To ensure the accuracy of the parts we ship to your customers, we request a print or drawing prior to machining.

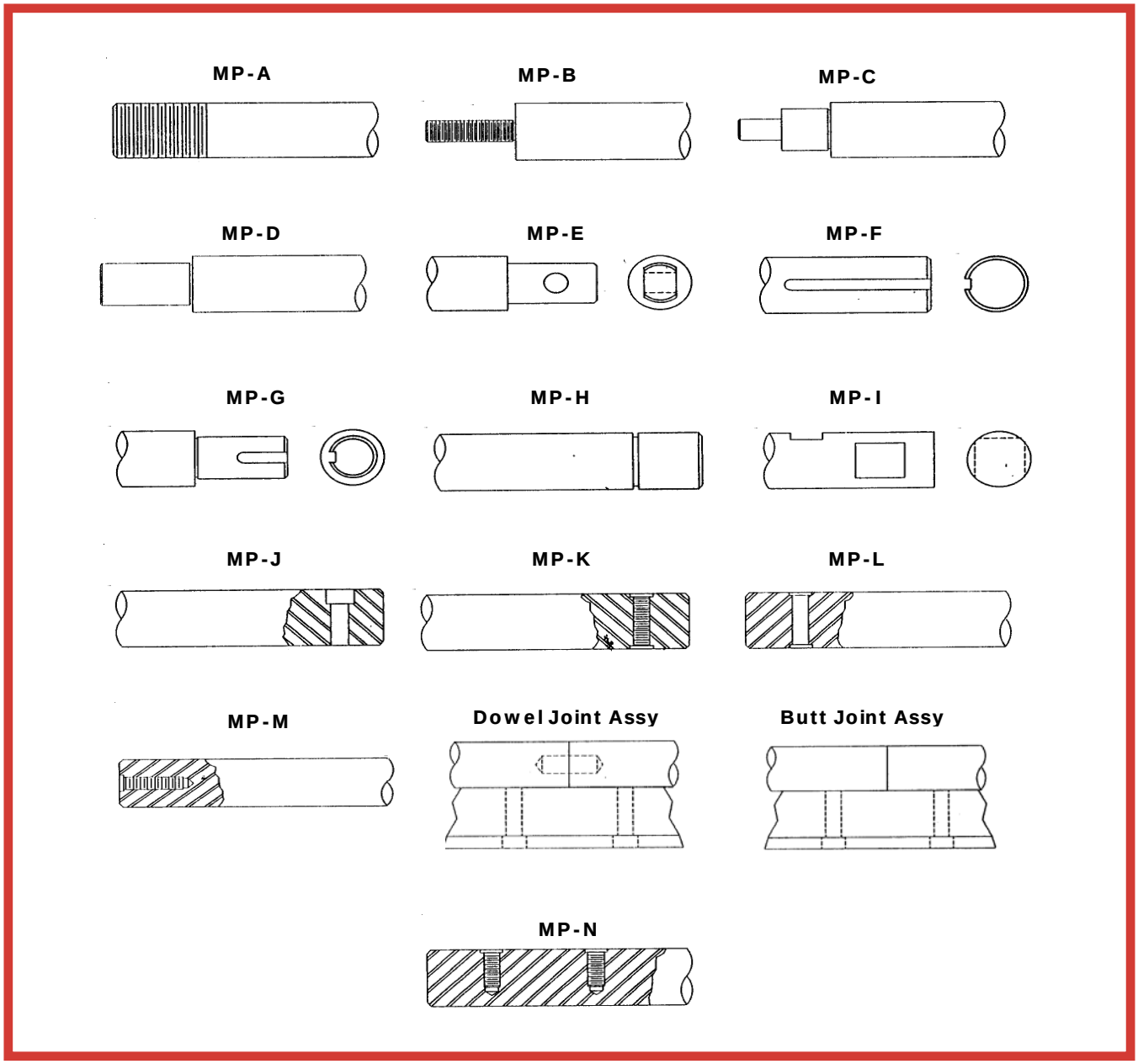

ISO 9001 : 2000

PH 1.800.293.2496 ■ FX 1.888.338.2388 ■ www.diamond-case.com

DIAMOND CASE

LINEAR BEARING SHAFT SUPPORT BLOCK

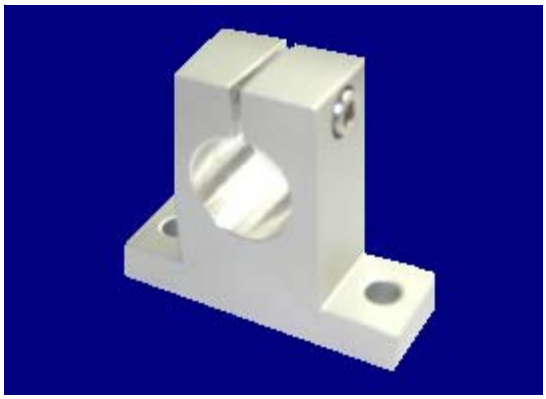

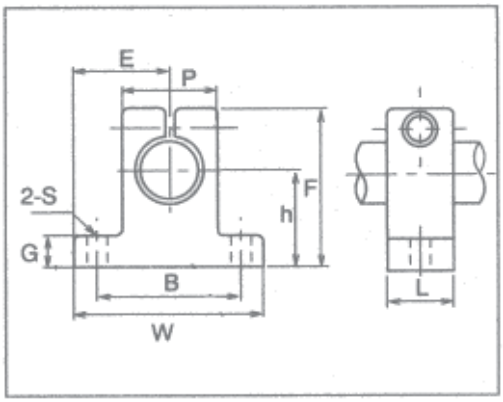

Part Number	Nominal Shaft Diameter (inch)	Dimensions (inches)								Mounting Holes		Wt. (Lbs)
		h (+/- .001)	E (+/- .0005)	W	L	F	G	P	B (+/- .01)	S	BOLT #	
ASB8	.500	1.0000	1.0000	2.000	.625	1.625	.250	.875	1.500	.188	#8	.075
ASB12	.750	1.2500	1.2500	2.500	.750	2.063	.313	1.250	2.000	.218	#10	.156
ASB16	1.000	1.5000	1.5315	3.063	1.000	2.500	.375	1.500	2.500	.281	1/4	.294
ASB20	1.250	1.7500	1.8750	3.750	1.125	3.000	.438	2.000	3.000	.346	5/16	.531
ASB24	1.500	2.0000	2.1875	4.375	1.250	3.437	.500	2.250	3.500	.346	5/16	.725
ASB32	2.000	2.5000	2.7500	5.500	1.500	4.375	.625	3.000	4.500	.406	3/8	1.400

Material - Aluminum

Diamond Case Linear Bearing Shaft Support Blocks Provide:

- **Low profile design.**
- **Light weight, high strength construction.**
- **Simple installation with pre-drilled mounting holes.**

ISO 9001 : 2000 REGISTERED FIRM

PH 1.800.293.2496 ■ FX 1.888.338.2388 ■ www.diamond-case.com

DIAMOND CASE

SBI / SBG

Linear Rail System Catalog

1590 E. Highwood
Pontiac, MI 48340
800.293.2496
Fax: 888.338.2388
daved@diamond-case.com
www.diamond-case.com

2011

Linear Rail System Catalog

LINEAR RAIL Cross Reference Guide

DIAMOND CASE

	DIAMOND CASE		Example	THK	Example	HIWIN	Example	NSK	Example	REXROTH/STAR	Example	THOMSON	Example
SBI High-Load SBG Standard SERIES	**SBI** Available Block Sizes: **15, 20, 25, 30, 35, 45**	**SBI/SBG FL** Flange Standard	SBG15FL SBI15FL	**HSR A** (B, CA)	HSR15CA	**HGW/LGH** CA, CB	HGW15CA LGH15CA	**LH EL** (FL)	LH20EL	**FNSR1651 XX**	FNSR1651 20	**AG AA**	AG15AA
		SBI/SBG FLL Flange High Load	SBG20FLL SBI20FLL	**HSR A** LA, LB	HSR20LB	**HGW/LGH** HA, HB, HC	HGW20HA LGH20LA	**LH GL**	LH20GL	**FNSR1653 XX**	FNSR1653 20	**AG BA**	AG15BA
	SBG Available Block Sizes: **15, 20, 25, 30, 35, 45, 55, 65**	**SBI/SBG SL** Slim Standard	SBG15SL SBI15SL	**HSR R**	HSR15R	**HGH/LGH CA**	HGH15CA LGH15CA	**LH AN**	LH20AN	**SNSR1622 XX**	FNSR1622 20	**AG CA**	AG15CA
		SBI/SBG SLL Slim High Load	SBG20SLL SBI20SLL	**HSR LR**	HSR20LR	**HGH/LGH HA**	HGH20HA LGH20HA	**LH BN**	LH20BN	**SNSR1623 XX**	FNSR1623 20	**AG DA**	AG15DA
SBS Compact Slim Standard SERIES	Available Block Sizes: **15, 20, 25, 30, 35, 45**	**SBS SL** Slim Standard	SBS15SL	**SR W**	SR15W	**EGH CA**	EGH20CA	**LS AL**	LS20AL	**SNHR1621 XX**	SNHR1621 20	**411H C0**	411H15C0
		SBS SLL Slim High Load	SBS20SLL	**SHS LV**	SHS20LV	-	-	**LS BL**	LS20BL	**SNHR1623 XX**	SNHR1623 20	**411H E0**	411H15E0
	Available Block Sizes: **15, 20, 25**	**SBS FV** Flange, Shorther Length	SBS15FV	**SR SB**	SR15SB	**EGW SA**	EGW15SA	**KL**	15KL	-	-	-	-
		SBS SV Slim with Shorter Length	SBS20SV	**SR V**	SR15V	**EGH SA**	EGH15SA	**LS CL**	LS15CL	-	-	**411H D0**	411H15D0
SPG Spacer Low Noise Standard SERIES	Available Block Sizes: **20, 25, 30, 35**	**SPG FL** Flange Standard Low Noise	SPG20FL	**SHS C**	SHS20C	**QHGW** CA, CB, CC	QHGW20CA	**SH EL**	SH20EL	**FNSR1651 XX-22**	FNSR1651 20-22	**513H A0**	513H20A0
		SPG FLL Flange High Load Low Noise	SPG20FLL	**SHS LC**	SHS20LC	**QHGW** HA, HB, HC	QHGW20HA	**SH GL**	SH20GL	**FLSR1653 XX-22**	FLSR1653 20-22	**513H B0**	513H20B0
	Available Block Sizes: **20, 25, 30, 35**	**SPG SL** Slim Standard	SPG20SL	**SHS R**	SHS15R	**QHGH CA**	QHGH20CA	**SH AN**	SH20AN	**SNSR1622 XX-22**	SNSR1622 20-22	**513H C0**	513H20C0
		SPG SLL Slim High Load	SPG20SLL	**SHS LR**	SHS20LR	**QHGH HA**	QHGH20HA	**SH BN**	SH20BN	**SNSR 1623 XX-22**	SNHR1623 20-22	**513H D0**	513H20D0
SPS Spacer Low Noise Compact & Slim SERIES	Available Block Sizes: **20, 25, 30, 35**	**SPS SL** Slim Standard	SPS20SL	**SRR XWY**	SSR20XWY	**AGH CA**	AGH20CA	**SS AL**	SS20AL	**SNHR1621 XX-22**	SNHR1621 20-22	-	-
		SPS SLL Slim High Load	SPS20SLL	**SHS LV**	SHS20LV	**AGW CA**	AGW20CA	**SS BN**	SS20BN	-	-	-	-
	Available Block Sizes: **20, 25, 30, 35**	**SPS FV** Flange Super(Short Length)	SPS20FV	**SR SB**	SR20SB	**AGH SA**	AGH20SA	-	-	-	-	-	-
		SPS SV Slim Super (Shorter Length)	SPS20SV	**SR V**	SR20V	**AGW SA**	AGW20SA	**SS CL**	SS20CL	-	-	-	-
SBM Miniature & Wide SERIES	Available Block Sizes: **9, 12, 15**	**SBMN** Standard **SBML** High Load	SBMN09	**RSR VM**	RSR12VM	**MGN CM**	MGN9C-M	**LU AL**	LU12AL	**RO442**	RO422 9	**TSR MUU**	TSR9MUU
		SBMW Wide Mini	SBMW09	**RSR WV**	RSR12WV	**MGW CM**	MGW9C-M	**LE AL**	LE12AL	**RO443**	RO422 9	**TSR MU**	TSR9MU

The Types of Linear Rail System

The Types of Linear Rail System

SBI high-load type

With all advantages of our SBG type, SBI improves load capacity, and increases speed capabilities for the rail system.

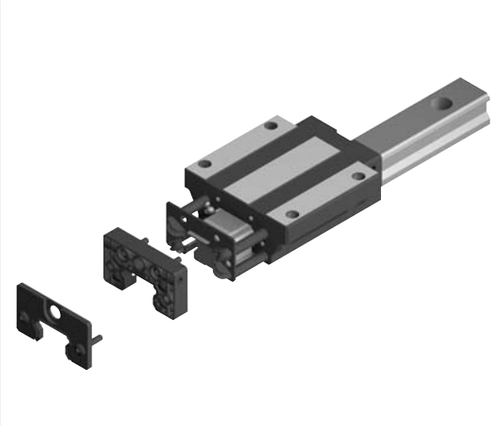

SBI type

-Type: SBI15~65

SBG standard

Standard SBC linear rail system.

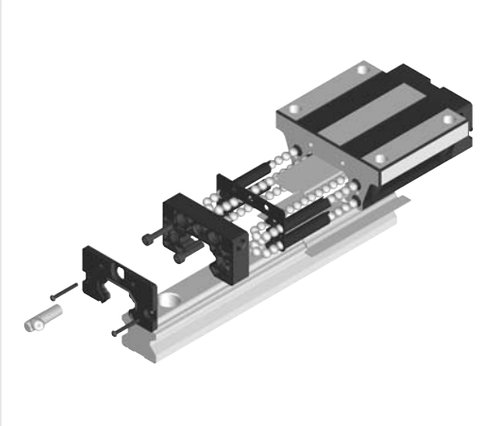

SBG type

Type: SBG 15~65

SBS type

-Assembly height is lower than SBG type

-Type : SBS 15~45

SBM miniature

Miniature linear rail system with compact size also achieve high-load.

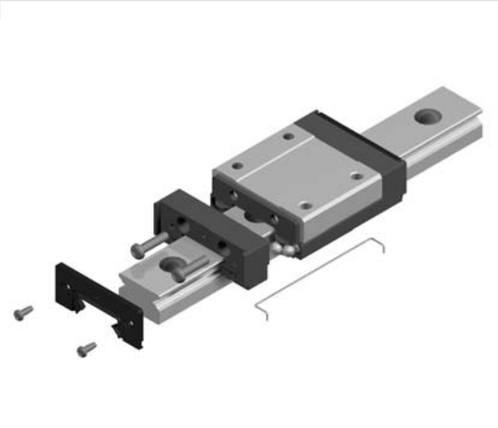

SBM (Standard miniature)

-Type: SBM09~15

SBML (High-load miniature)

-Type : SBML09~15

SBMW (Wide type miniature)

-Type: SBMW09~15

SPG spacer

Low noise type in which the plastic spacer are inserted in between balls.

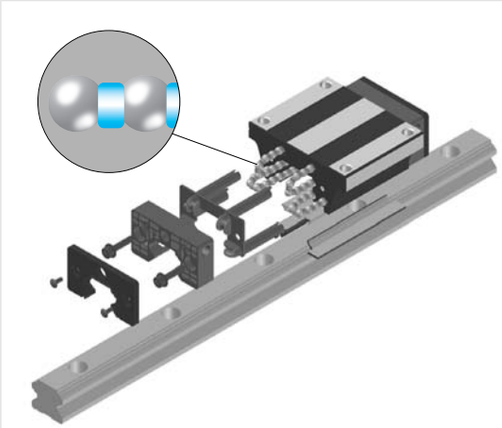

Low noise (Spacer type)

Spacer are inserted in between balls

SPG (=SBG dimensionally interchangeable)

Type : SPG 20~35

SPS (=SBS dimensionally interchangeable)

-Type: SPS 20~35

Ordering example

SBI20 FL – N – MF – ZZ – K1
[1] [2] [3] [4] [5] [6]

[1] Model
[2] Block type : FL, FLL, FV, SL. SLL, SV, HL, HLL, CL, CLL
[3] Position of grease fitting : None (front), N (side)
[4] Container : No symbol (standard), DF (high dust protection), MF (self lubricant)
[5] Seal : No symbol (standard), DD, ZZ, KK
[6] Preload : K0, K1, K2 ,K3

※ "K3" Preload is not available for SBI 15 type

[Ordering example for rail]

SBI20 – 1000L – B
[1] [2] [3]

[1] Model
[2] Rail length
[3] Bottom mounting : No symbol (standard), B (bottom mounting rail)

※ If only rail is ordered, N grade is available.

[Ordering for assembled rail and block]

SBI20 FL – N – MF – ZZ – 2 – K1 – 800 – N – R – B – II
[1] [2] [3] [4] [5] [6] [7] [8] [9] [10] [11] [12]

[1] Model
[2] Block type : FL, FLL, FV, SL. SLL, SV, HL, HLL, CL, CLL
[3] Position of grease fitting : None (front), N (side)
[4] Container : No symbol (standard), DF (high dust protection), MF (self lubricant)
[5] Seal : No symbol (standard), DD, ZZ, KK
[6] Block quantity on rail
[7] Preload : K0, K1, K2 ,K3
[8] Rail length
[9] Accuracy : N, H, P
[10] Surface treatment
[11] (B) Bottom mounting rail : No symbol (standard)
[12] Rail : number of rails per axis, 1=I, 2=II... 4=IV etc.

※ We recommend block and rail assembled to be ordered where high-precision and high-rigidity are required.
※ For surface treatment, please mark according to each surface treatment symbol.
※ If special G dimension is required, please mark when you place an order.
※ Please contact SBC for high temperature order.
※ "K3" Preload is not available for SBI 15 type

The structure of SBI

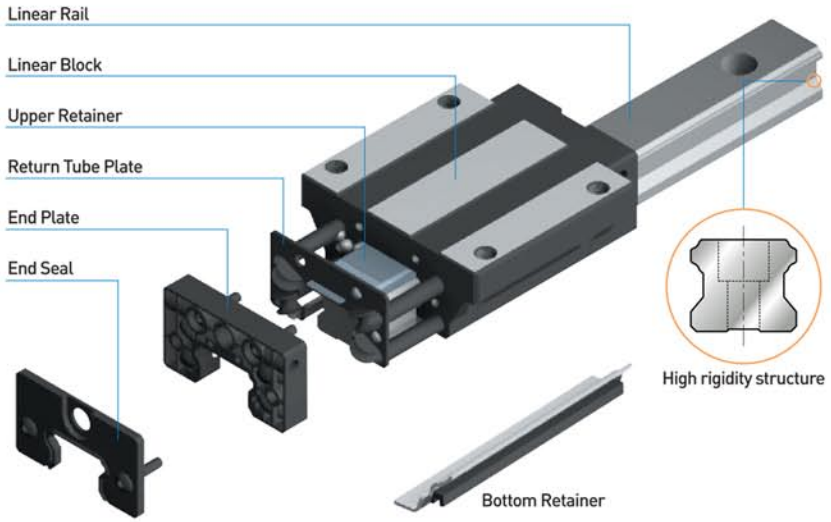

End seal	End plate	Retainer
New double lip structure which improves resistance to dust and particle contamination.	Manufactured with a new high rigidity engineered plastic. Purpose built to withstand the highest of unplanned impact loads without breaking.	Ball retainer plates now snap assembled to the blocks and this unique assembly method allows an amount of internal SELF-ALIGNMENT and load sharing while maintaining rigid ball control.
Return tube plate	**Linear block**	**Linear Rail**
The end plate and reversing ramps C/W new ball return tubes are now molded as one complete body component-this creates excellent rolling performance, lower operating and smoother grease flow for longer lubricant retention inside the bearing.	▪ Very rigid structure ▪ Lager circulation radius for the smooth movement ▪ Longer block length for higher load capacity ▪ Low center	SBI Rail is designed with a low profile and wide base. This characteristic allows greater stability in operation and during manufacture Results in greater linear precision

New structure maintains the advantages from SBG style

Circular arc groove

Two point contact structure of circular arc groove It keeps the function of **SELF-ALIGNING** and smooth rolling performance.

45° Angle of contact

Four rows of circular arc groove contact balls at an angle of 45 degree. It creates the same load in four directions.

Applied return tube plate

Taking an advantage from the SBG series return tube plate. It creates excellent rolling performance and lower operation noise.

The same dimensions

The dimensions of height, width and mounting holes are the same as SBG series slight variation in block length.

Self-aligning and keeping balls inside

Ball retainer plates now snap assemble to the blocks and this unique assembly method allows an amount of internal **SELF-ALIGNMENT** and load sharing while maintaining rigid ball control. This load sharing removes skidding and poor rolling performance by keeping balls inside the load zone.

DF structure

DF structure maintains low instrumental errors.

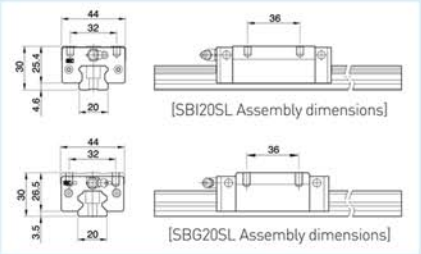

[Comparison assembly dimensions]

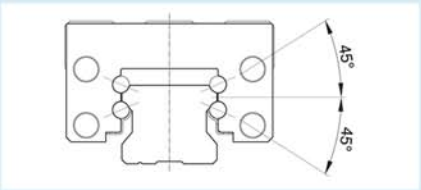

[45° Angle of contact & DF structure]

High load performance

Improved load capacity from the longer block length and changed radius of curvature

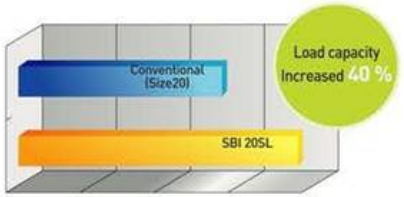

Load Capacity Increased

40%

[Unit: N]

	Conventional (Size15)	SBI 15	Conventional (Size20)	SBI 20	Conventional (Size25)	SBI 25
C	8.3	14.1	14.2	22.2	20.9	31.5
Co	13.4	24.1	25	38.2	39.2	52.1

• C : Basic dynamic load rating • Co : Basic static load rating

L1 is 20% greater than with the CONVENTIONAL block.
Greater length = More balls in contact = Greater load capacity.

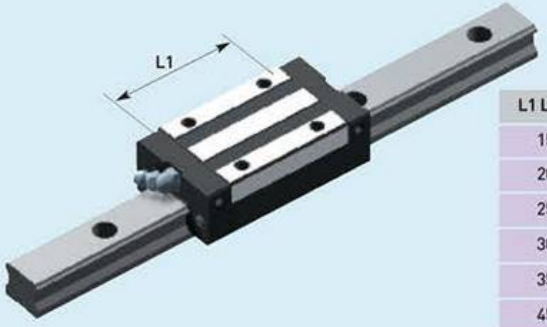

[Unit: mm]

L1 Length	Conventional	SBI
15SL	38.8	45.2
20SL	50.8	56.8
25SL	59.5	70
30SL	70.4	79.6
35SL	80.4	94.6
45SL	98	108

Accuracy Standard

Accuracy Standard

The accuracy of SBI is divided into three grades, N (Normal), H (High) and P (Precision).

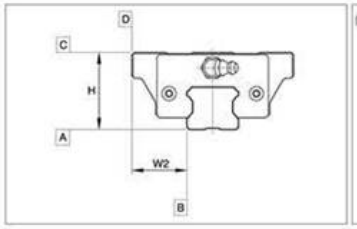

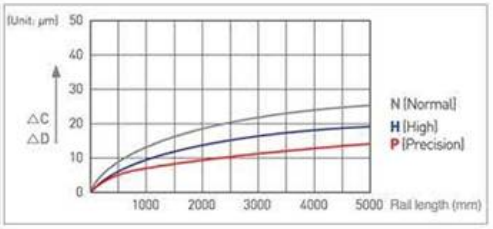

[Unit: mm]

Item	N	H*	P
Tolerance for the height H	±0.1	±0.04	±0.02
Tolerance for the rail-to-block lateral distance W2	±0.1	±0.04	±0.02
Tolerance for the height H difference among blocks	0.03	0.015	0.007
Tolerance for rail-to-block lateral distance W2 difference among blocks	0.03	0.015	0.007
Running parallelism of surface C with surface A	△ C		
Running parallelism of surface D with surface B	△ D		

Radial clearance

Reference	Volume of preload
K0 (None)	Clearance within 0.01 mm
K1* (Normal)	0.00 - 0.02 C
K2 (Light)	0.04 - 0.06 C
K3 (Heavy)	0.08 - 0.10 C

C (kN) : Basic dynamic load rating

* : Stock

Seal resistance value

[Unit: N]

Model size	Seal resistance value
15	2.0
20	2.5
25	3.0
30	3.9
35	2.5
45	3.4

For the maximum value of seal resistance of **SBI** standard type per block, in which grease is applied

Return to Table of Contents

SBI-FL/FLL

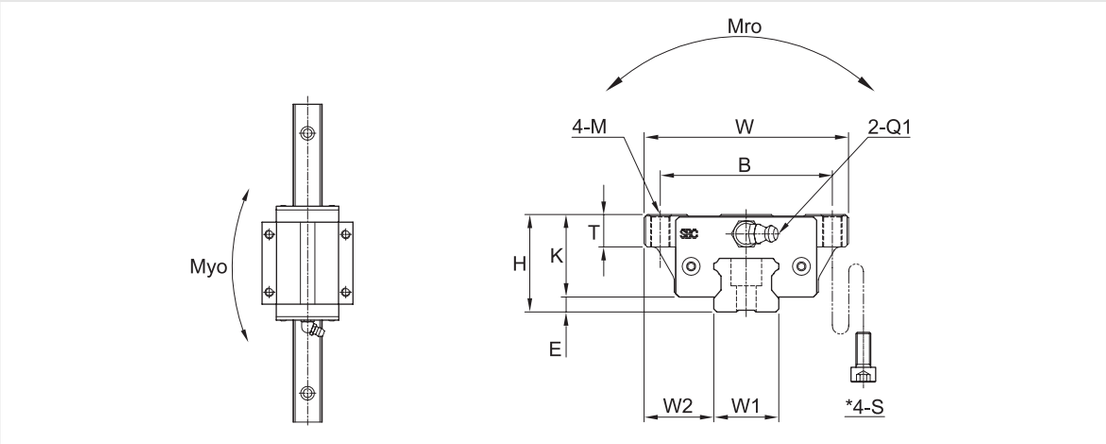

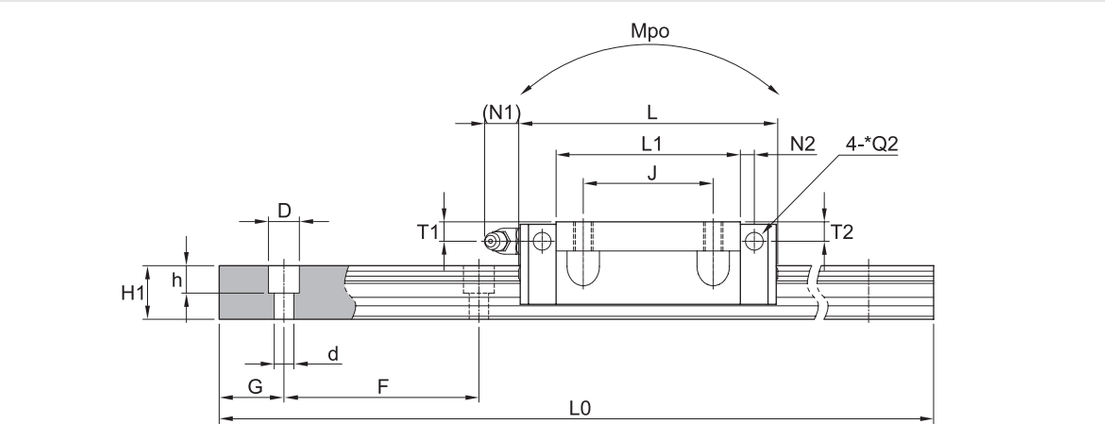

(Unit : mm)

Model	Mounting dimension				Block dimensions																									
	H	W	L	E	Mounting tap hole				L1	T±1	K	Grease fitting						Rail dimension									Basic load rating [kN]		Permissible static moment [kN • m]			Mass	
					B	J	M	*S				T1	N1	T2	N2	Q1	*Q2	W1	W2	H1	F	Bolt hole d	Bolt hole D	Bolt hole h	G	Max length of rail L0	C	Co	Mro	Mpo	Myo	Block [kg]	Rail [kg/m]
SBI15 FL	24	47	63.8	3	38	30	M5	M4	45.2	9	21	4.5	5.5	3.8	3.8	M4x0.7	Ø4	15	16	13	60	4.5	7.5	5.5	20	3000	14.1	24.1	0.16	0.17	0.17	0.19	1.3
SBI15 FLL	24	47	79.4	3	38	30	M5	M4	60.8	9	21	4.5	5.5	3.8	3.8	M4x0.7	Ø4	15	16	13	60	4.5	7.5	5.5	20	4000	17.1	31.7	0.21	0.29	0.29	0.26	1.3
SBI20 FL	30	63	78.8	4.6	53	40	M6	M5	56.8	12	25.4	6	11.7	5.8	5	M6x0.75	Ø4	20	21.5	16.5	60	6	9.5	8.5	20	4000	22.2	38.2	0.36	0.33	0.33	0.41	2.2
SBI20 FLL	30	63	96.4	4.6	53	40	M6	M5	74.4	12	25.4	6	11.7	5.8	5	M6x0.75	Ø4	20	21.5	16.5	60	6	9.5	8.5	20	4000	27.9	50	0.47	0.56	0.56	0.54	2.2
SBI25 FL	36	70	92	5.5	57	45	M8	M6	70	14	30.5	6	11.7	5	5	M6x0.75	Ø4	23	23.5	20	60	7	11	9	20	4000	31.5	52.1	0.56	0.56	0.56	0.69	3
SBI25 FLL	36	70	108	5.5	57	45	M8	M6	86	14	30.5	6	11.7	5	5	M6x0.75	Ø4	23	23.5	20	60	7	11	9	20	4000	36.7	64.4	0.69	0.84	0.84	0.85	3
SBI30 FL	42	90	107.6	7	72	52	M10	M8	79.6	15.5	35	8.5	11.7	7.8	5	M6x0.75	Ø6	28	31	23	80	9	14	12	20	4000	42.8	65.4	0.85	0.77	0.77	1.04	4.25
SBI30 FLL	42	90	131.6	7	72	52	M10	M8	103.6	15.5	35	8.5	11.7	7.8	5	M6x0.75	Ø6	28	31	23	80	9	14	12	20	4000	51.3	84.7	1.10	1.30	1.30	1.37	4.25
SBI35 FL	48	100	124.6	7.5	82	62	M10	M8	94.6	15	40.5	8	11.7	8	6	M6x0.75	Ø6	34	33	26	80	9	14	12	20	4000	59.5	89.1	1.42	1.28	1.28	1.56	6.02
SBI35 FLL	48	100	152.6	7.5	82	62	M10	M8	122.6	15	40.5	8	11.7	8	6	M6x0.75	Ø6	34	33	26	80	9	14	12	20	4000	71.3	115.3	1.83	2.12	2.12	2.04	6.02
SBI45 FL	60	120	142	9	100	80	M12	M10	108	18	51	10.5	13.5	9.3	6.5	PT1/8	Ø6	45	37.5	32	105	14	20	17	22.5	4000	79.2	116.3	2.48	1.90	1.90	2.80	9.77
SBI45 FLL	60	120	174	9	100	80	M12	M10	140	18	51	10.5	13.5	9.3	6.5	PT1/8	Ø6	45	37.5	32	105	14	20	17	22.5	4000	94.8	150.5	3.21	3.14	3.14	3.69	9.77
SBI55 FL	70	140	172.4	12	116	95	M14	M12	131	22	58	12	13	12	8	PT1/8	PT1/8	53	43.5	38	120	16	23	20	30	4000	127.3	181.8	4.81	2.97	2.97	4.42	13.72
SBI55 FLL	70	140	211.8	12	116	95	M14	M12	170.4	22	58	12	13	12	8	PT1/8	PT1/8	53	43.5	38	120	16	23	20	30	4000	147.9	224.5	5.95	4.78	4.78	5.82	13.72
SBI65 FL	90	170	219.8	19	142	110	M16	M14	170.4	26	71	14	13	14	10	PT1/8	PT1/8	63	53.5	53	150	18	26	22	35	4000	188.3	261.7	8.24	5.57	5.57	9.1	23.17
SBI65 FLL	90	170	272.2	19	142	110	M16	M14	222.8	26	71	14	13	14	10	PT1/8	PT1/8	63	53.5	53	150	18	26	22	35	4000	232.5	354.1	11.15	9.86	9.86	11.98	23.17

❶ C (Basic dynamic load rating), Co (Basic static load rating)

❷ *S: Bolt size for bottom mounting type of block.

❸ *Q2: The hole of side grease nipple is not made to prevent a foreign substance from going into inside. When you order the side grease nipple, we build it by ourselves.

SBI-SL/SLL

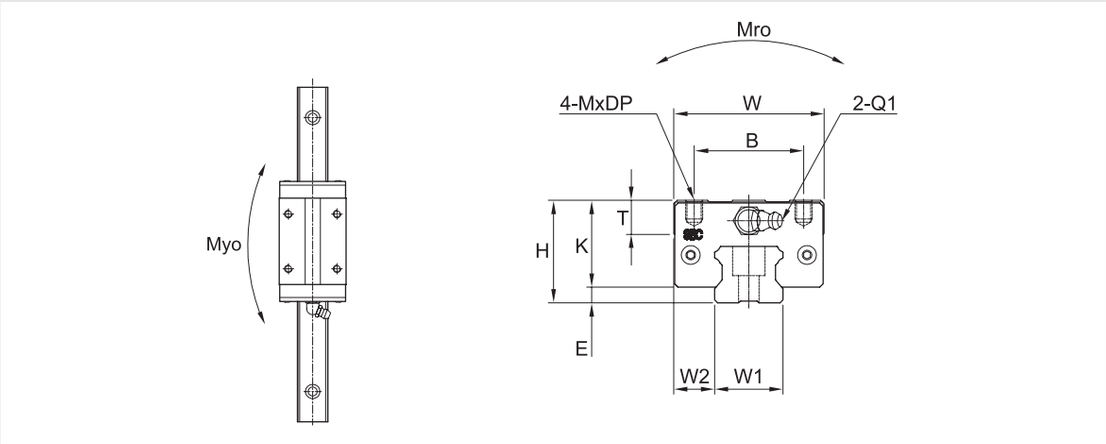

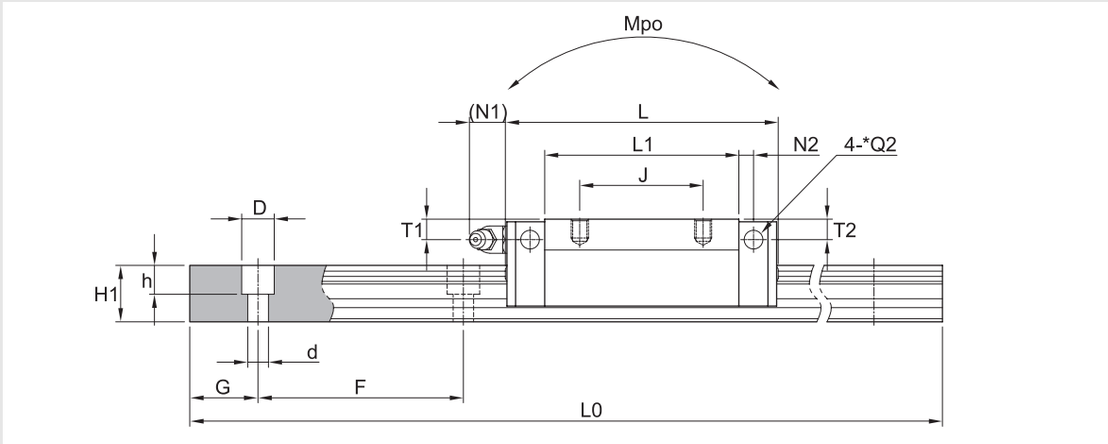

(Unit : mm)

Model	Mounting dimension				Block dimensions													Rail dimension									Basic load rating [kN]		Permissible static moment [kN • m]			Mass	
	H	W	L	E	Mounting tap hole				L1	T±1	K	Grease fitting						W1	W2	H1	F	Bolt hole			G	Max length of rail L0	C	Co	Mro	Mpo	Myo	Block [kg]	Rail [kg/m]
					B	J	M	DP				T1	N1	T2	N2	Q1	*Q2					d	D	h									
SBI15 SL	28	34	63.8	3	26	26	M4	5	45.2	10	25	8.5	5.5	7.8	3.8	M4x0.7	Ø4	15	9.5	13	60	4.5	7.5	5.5	20	3000	14.1	24.1	0.16	0.17	0.17	0.19	1.3
SBI15 SLL	28	34	79.4	3	26	34	M4	5	60.8	10	25	8.5	5.5	7.8	3.8	M4x0.7	Ø4	15	9.5	13	60	4.5	7.5	5.5	20	4000	17.1	31.7	0.21	0.29	0.29	0.26	1.3
SBI20 SL	30	44	78.8	4.6	32	36	M5	5	56.8	10	25.4	6	11.7	5.8	5	M6x0.75	Ø4	20	12	16.5	60	6	9.5	8.5	20	4000	22.2	38.2	0.36	0.33	0.33	0.41	2.2
SBI20 SLL	30	44	96.4	4.6	32	50	M5	5	74.4	10	25.4	6	11.7	5.8	5	M6x0.75	Ø4	20	12	16.5	60	6	9.5	8.5	20	4000	27.9	50	0.47	0.56	0.56	0.54	2.2
SBI25 SL	40	48	92	5.5	35	35	M6	8	70	16	34.5	10	11.7	9	5	M6x0.75	Ø4	23	12.5	20	60	7	11	9	20	4000	31.5	52.1	0.56	0.56	0.56	0.69	3
SBI25 SLL	40	48	108	5.5	35	50	M6	8	86	16	34.5	10	11.7	9	5	M6x0.75	Ø4	23	12.5	20	60	7	11	9	20	4000	36.7	64.4	0.69	0.84	0.84	0.85	3
SBI30 SL	45	60	107.6	7	40	40	M8	10	79.6	12	38	11.5	11.7	10.8	5	M6x0.75	Ø6	28	16	23	80	9	14	12	20	4000	42.8	65.4	0.85	0.77	0.77	1.04	4.25
SBI30 SLL	45	60	131.6	7	40	60	M8	10	103.6	12	38	11.5	11.7	10.8	5	M6x0.75	Ø6	28	16	23	80	9	14	12	20	4000	51.3	84.7	1.10	1.30	1.30	1.37	4.25
SBI35 SL	55	70	124.6	7.5	50	50	M8	10	94.6	15	47.5	15	11.7	15	6	M6x0.75	Ø6	34	18	26	80	9	14	12	20	4000	59.5	89.1	1.42	1.28	1.28	1.56	6.02
SBI35 SLL	55	70	152.6	7.5	50	72	M8	10	122.6	15	47.5	15	11.7	15	6	M6x0.75	Ø6	34	18	26	80	9	14	12	20	4000	71.3	115.3	1.83	2.12	2.12	2.04	6.02
SBI45 SL	70	86	142	9	60	60	M10	13	108	17	61	20.5	13.5	19.3	6.5	PT1/8	Ø6	45	20.5	32	105	14	20	17	22.5	4000	79.2	116.3	2.48	1.90	1.90	2.80	9.77
SBI45 SLL	70	86	174	9	60	80	M10	13	140	17	61	20.5	13.5	19.3	6.5	PT1/8	Ø6	45	20.5	32	105	14	20	17	22.5	4000	94.8	150.5	3.21	3.14	3.14	3.69	9.77
SBI55 SL	80	100	172.4	12	75	75	M12	18	131	21	68	22	13	22	8	PT1/8	PT1/8	53	22.5	38	120	16	23	20	30	4000	127.3	181.8	4.81	2.97	2.97	4.42	13.72
SBI55 SLL	80	100	211.8	12	75	95	M12	18	170.4	21	68	22	13	22	8	PT1/8	PT1/8	53	22.5	38	120	16	23	20	30	4000	147.9	224.5	5.95	4.78	4.78	5.82	13.72
SBI65 SL	90	126	219.8	19	76	70	M16	16	170.4	26	71	14	13	14	10	PT1/8	PT1/8	63	31.5	53	150	18	26	22	35	4000	188.3	261.7	8.24	5.57	5.57	9.1	23.17
SBI65 SLL	90	126	272.2	19	76	120	M16	16	222.8	26	71	14	13	14	10	PT1/8	PT1/8	63	31.5	53	150	18	26	22	35	4000	232.5	354.1	11.15	9.86	9.86	11.98	23.17

❶ C (Basic dynamic load rating), Co (Basic static load rating)

❷ *Q2: The hole of side grease nipple is not made to prevent a foreign substance from going into inside.
When you order the side grease nipple, we build it by ourselves.

SBI-HL/HLL

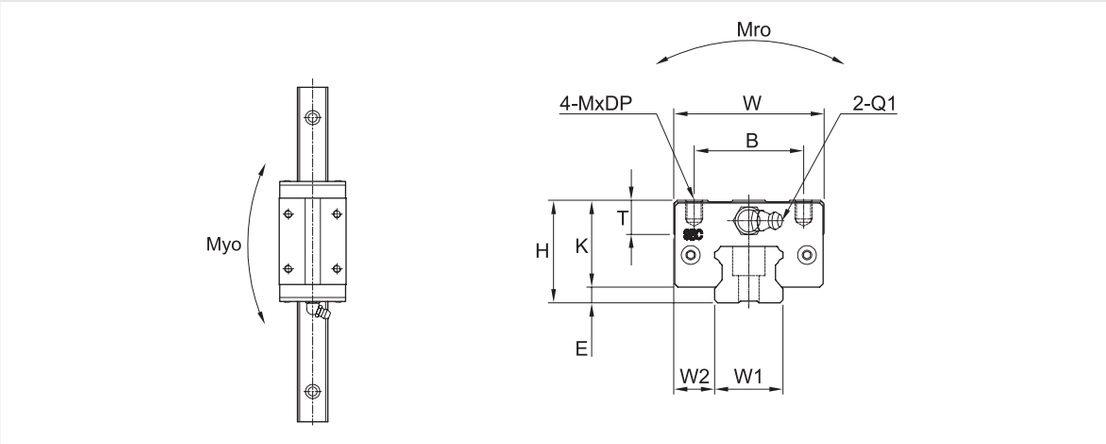

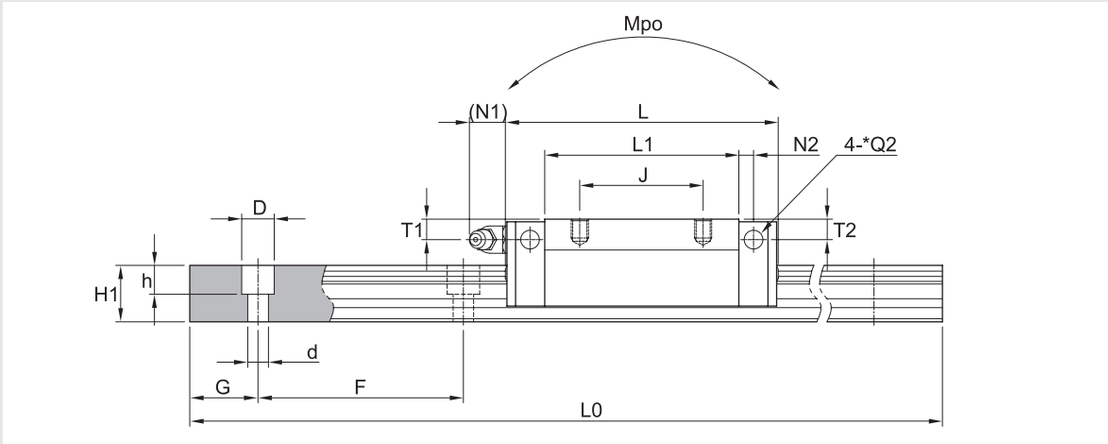

(Unit : mm)

Model	Mounting dimension				Block dimensions													Rail dimension									Basic load rating [kN]		Permissible static moment [kN • m]			Mass	
	H	W	L	E	Mounting tap hole				L1	T±1	K	Grease fitting						W1	W2	H1	F	Bolt hole			G	Max length of rail L0	C	Co	Mro	Mpo	Myo	Block [kg]	Rail [kg/m]
					B	J	M	DP				T1	N1	T2	N2	Q1	*Q2					d	D	h									
SBI15 HL	24	34	63.8	3	26	26	M4	4	45.2	6	21	4.5	5.5	3.8	3.8	M4x0.7	Ø4	15	9.5	13	60	4.5	7.5	5.5	20	3000	14.1	24.1	0.16	0.17	0.17	0.19	1.3
SBI15 HLL	24	34	79.4	3	26	34	M4	4	60.8	6	21	4.5	5.5	3.8	3.8	M4x0.7	Ø4	15	9.5	13	60	4.5	7.5	5.5	20	4000	17.1	31.7	0.21	0.29	0.29	0.26	1.3
SBI25 HL	36	48	92	5.5	35	35	M6	6	70	12	30.5	6	11.7	5	5.5	M6x0.75	Ø4	23	12.5	20	60	7	11	9	20	4000	31.5	52.1	0.56	0.56	0.56	0.69	3
SBI25 HLL	36	48	108	5.5	35	50	M6	6	86	12	30.5	6	11.7	5	5.5	M6x0.75	Ø4	23	12.5	20	60	7	11	9	20	4000	36.7	64.4	0.69	0.84	0.84	0.85	3
SBI30 HL	42	60	107.6	7	40	40	M8	8	79.6	12	35	8.5	11.7	7.8	5	M6x0.75	Ø6	28	16	23	80	9	14	12	20	4000	42.8	65.4	0.85	0.77	0.77	1.04	4.25
SBI30 HLL	42	60	131.6	7	40	60	M8	8	103.6	12	35	8.5	11.7	7.8	5	M6x0.75	Ø6	28	16	23	80	9	14	12	20	4000	51.3	84.7	1.10	1.30	1.30	1.37	4.25
SBI35 HL	48	70	124.6	7.5	50	50	M8	8	94.6	15	40.5	8	11.7	8	6	M6x0.75	Ø6	34	18	26	80	9	14	12	20	4000	59.5	89.1	1.42	1.28	1.28	1.56	6.02
SBI35 HLL	48	70	152.6	7.5	50	72	M8	8	122.6	15	40.5	8	11.7	8	6	M6x0.75	Ø6	34	18	26	80	9	14	12	20	4000	71.3	115.3	1.83	2.12	2.12	2.04	6.02
SBI45 HL	60	86	142	9	60	60	M10	10	108	17	51	10.5	13.5	9.3	6.5	PT1/8	Ø6	45	20.5	32	105	14	20	17	22.5	4000	79.2	116.3	2.48	1.90	1.90	2.80	9.77
SBI45 HLL	60	86	174	9	60	80	M10	10	140	17	51	10.5	13.5	9.3	6.5	PT1/8	Ø6	45	20.5	32	105	14	20	17	22.5	4000	94.8	150.5	3.21	3.14	3.14	3.69	9.77
SBI55 HL	70	100	172.4	12	75	75	M12	12	131	21	58	12	13	12	8	PT1/8	PT1/8	53	22.5	38	120	16	23	20	30	4000	127.3	181.8	4.81	2.97	2.97	4.42	13.72
SBI55 HLL	70	100	211.8	12	75	95	M12	12	170.4	21	58	12	13	12	8	PT1/8	PT1/8	53	22.5	38	120	16	23	20	30	4000	147.9	224.5	5.95	4.78	4.78	5.82	13.72

❶ C (Basic dynamic load rating), Co (Basic static load rating)

❷ *Q2: The hole of side grease nipple is not made to prevent a foreign substance from going into inside.
When you order the side grease nipple, we build it by ourselves.

SBI High-load Linear Rail System

SBI-FV

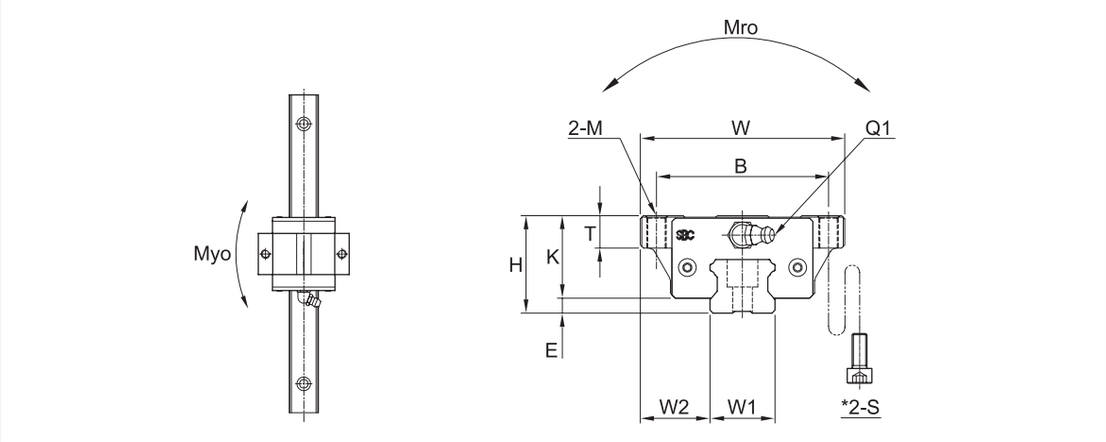

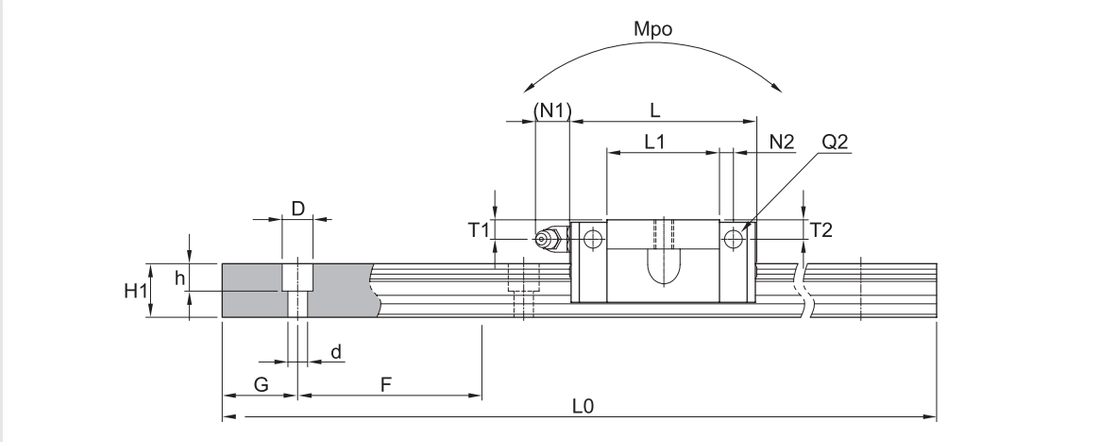

(Unit : mm)

Model	Mounting dimension				Block dimensions											
	H	W	L	E	Mounting tap hole			L1	T	K	Grease fitting					
					B	M	*S				T1	N1	T2	N2	Q1	*Q2
SBI15 FV	24	47	39.9	3	38	M5	M4	21.3	8.8	21	4.5	5.5	3.8	3.4	M4x0.7	Ø4
SBI20 FV	28	63	49.1	4.5	53	M6	M5	27.1	8	23.4	4.8	11.7	4	5	M6x0.75	Ø4
SBI25 FV	33	70	52.6	5.5	57	M8	M6	30.6	9	27.5	5.4	11.7	5.4	5	M6x0.75	Ø4

Rail dimension									Basic load rating [kN]		Permissible static moment [kN • m]			Mass	
W1	W2	H1	F	Bolt hole			G	Max length of rail L0	C	Co	Mro	Mpo	Myo	Block [kg]	Rail [kg/m]
				d	D	h									
15	16	13	60	4.5	7.5	5.5	20	3000	5.8	12.8	0.04	0.03	0.03	0.10	1.3
20	21.5	16.5	60	6	9.5	8.5	20	4000	9.4	20.2	0.12	0.10	0.10	0.24	2.2
23	23.5	20	60	7	11	9	20	4000	12.4	26.1	0.19	0.17	0.17	0.37	3

❶ C (Basic dynamic load rating), Co (Basic static load rating)

❷ *S: Bolt size for bottom mounting type of block.

❸ *Q2: The hole of side grease nipple is not made to prevent a foreign substance from going into inside.
When you order the side grease nipple, we build it by ourselves.

SBI-CL/CLL

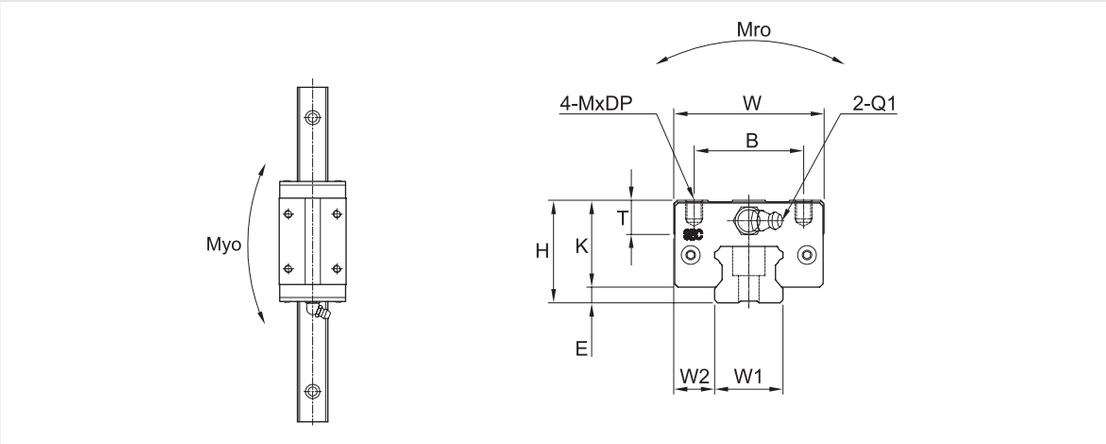

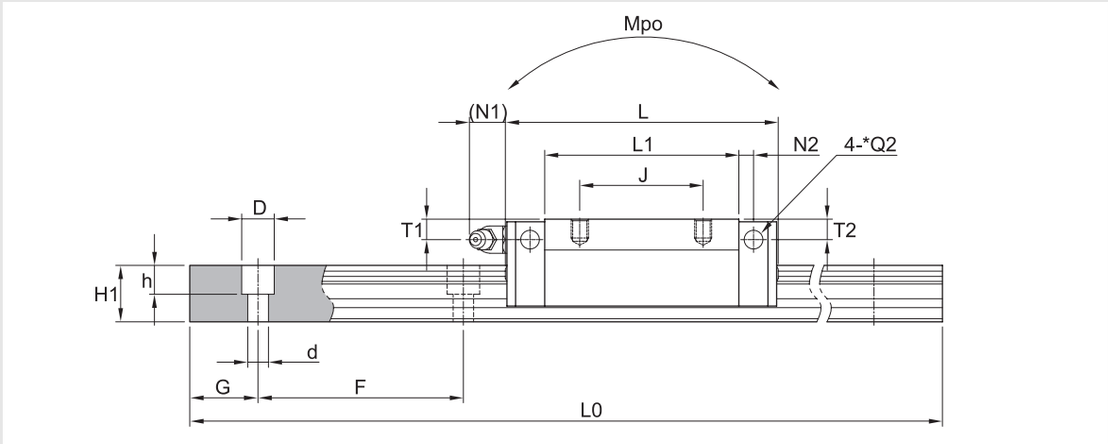

(Unit : mm)

Model	Mounting dimension				Block dimensions													Rail dimension									Basic load rating [kN]		Permissible static moment [kN • m]			Mass	
	H	W	L	E	Mounting tap hole				L1	T	K	Grease fitting						W1	W2	H1	F	Bolt hole			G	Max length of rail L0						Block [kg]	Rail [kg/m]
					B	J	M	DP				T1	N1	T2	N2	Q1	*Q2					d	D	h			C	Co	Mro	Mpo	Myo		
SBI20 CL	28	44	78.8	4.6	32	32	M5	5	56.8	7.8	23.4	4.8	11.7	4	5	M6x0.75	∅4	20	12	16.5	60	6	9.5	8.5	20	4000	22.2	38.2	0.36	0.33	0.33	0.39	2.2
SBI20 CLL	28	44	96.4	4.6	32	50	M5	5	74.4	7.8	23.4	4.8	11.7	4	5	M6x0.75	∅4	20	12	16.5	60	6	9.5	8.5	20	4000	27.9	50	0.47	0.56	0.56	0.52	2.2
SBI25 CL	33	48	92	5.5	35	35	M6	6	70	9	27.5	5.4	11.7	5.4	5	M6x0.75	∅4	23	12.5	20	60	7	11	9	20	4000	31.5	52.1	0.56	0.56	0.56	0.66	3
SBI25 CLL	33	48	108	5.5	35	50	M6	6	86	9	27.5	5.4	11.7	5.4	5	M6x0.75	∅4	23	12.5	20	60	7	11	9	20	4000	36.7	64.4	0.69	0.84	0.84	0.82	3

❶ C (Basic dynamic load rating), Co (Basic static load rating)

❷ *Q2: The hole of side grease nipple is not made to prevent a foreign substance from going into inside.
When you order the side grease nipple, we build it by ourselves.

SBI-SV

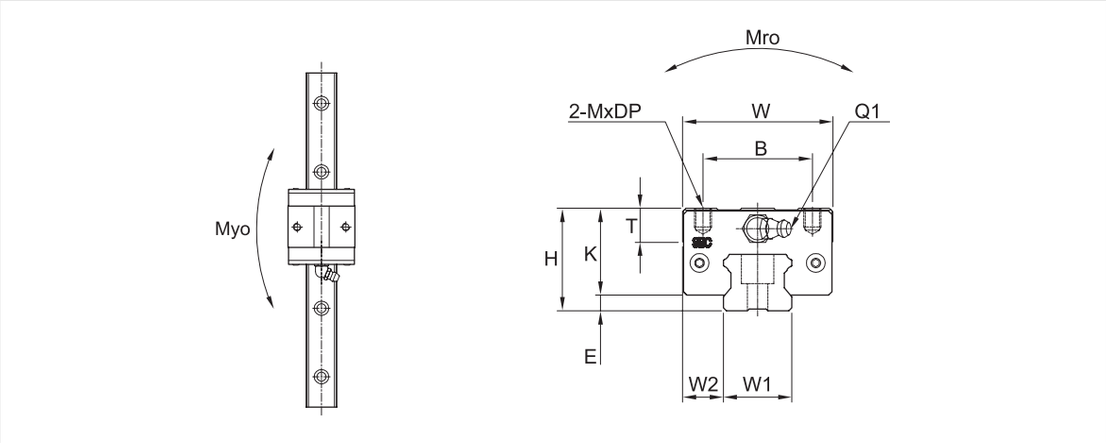

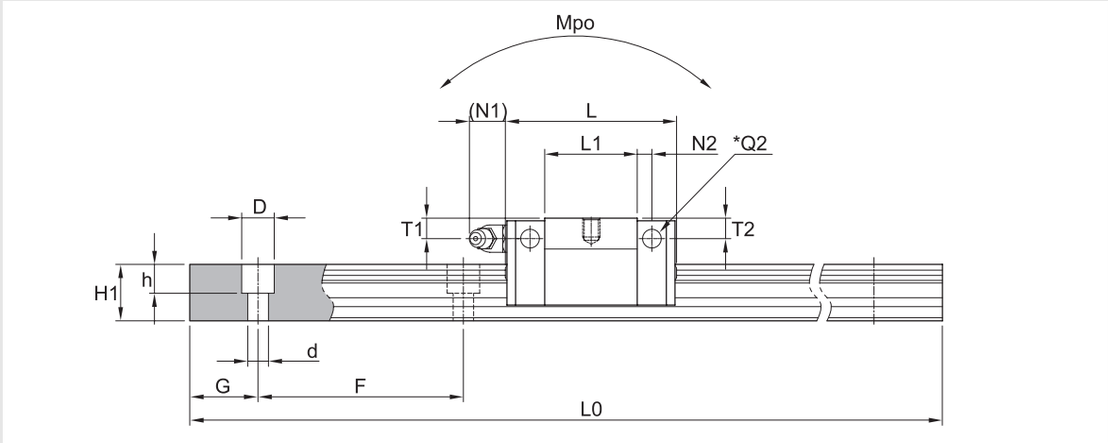

(Unit : mm)

Model	Mounting dimension				Block dimensions											
	H	W	L	E	Mounting tap hole			L1	T	K	Grease fitting					
					B	M	DP				T1	N1	T2	N2	Q1	*Q2
SBI15 SV	24	34	39.9	3	26	M4	5	21.3	6	21	4.5	5.5	3.8	3.4	M4x0.7	Ø4
SBI20 SV	28	44	49.1	4.6	32	M5	5	27.1	7.8	23.4	4.8	11.7	4	5	M6x0.75	Ø4
SBI25 SV	33	48	52.6	5.5	35	M6	6	30.6	9	27.5	5.4	11.7	5.4	5	M6x0.75	Ø4

Rail dimension									Basic load rating [kN]		Permissible static moment [kN • m]			Mass	
W1	W2	H1	F	Bolt hole			G	Max langth of rail L0	C	Co	Mro	Mpo	Myo	Block [kg]	Rail [kg/m]
				d	D	h									
15	9.5	13	60	4.5	7.5	5.5	20	3000	5.8	12.8	0.04	0.03	0.03	0.10	1.3
20	12	16.5	60	6	9.5	8.5	20	4000	9.4	20.2	0.12	0.10	0.10	0.24	2.2
23	12.5	20	60	7	11	9	20	4000	12.4	26.1	0.19	0.17	0.17	0.37	3

❶ C (Basic dynamic load rating), Co (Basic static load rating)

❷ *Q2: The hole of side grease nipple is not made to prevent a foreign substance from going into inside.
When you order the side grease nipple, we build it by ourselves.

Standard and Max. Length of SBI rail

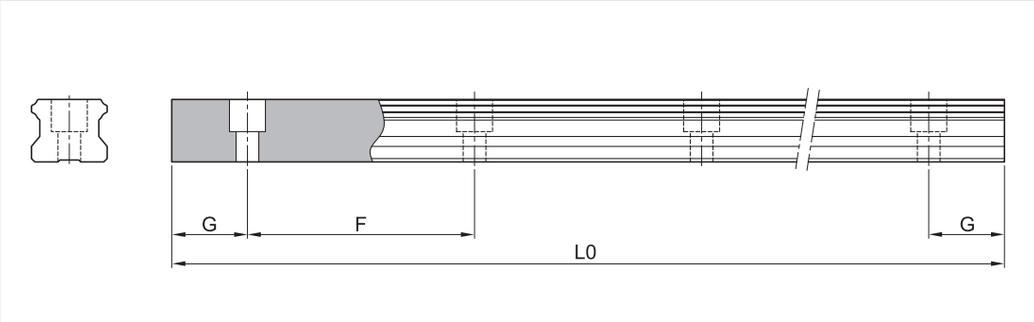

(Unit : mm)

Model number	SBI15	SBI20	SBI25	SBI30	SBI35	SBI45	SBI55	SBI65
Standard length	160	220	220	280	280	570	780	1270
	220	280	280	440	440	885	900	1570
	280	240	340	600	600	1095	1020	2020
	340	460	460	760	760	1200	1140	2470
	460	640	640	1000	1000	1410	1260	2620
	640	820	820	1240	1240	1620	1380	2920
	820	1000	1000	1480	1480	1830	1500	3070
	1000	1240	1240	1640	1640	2040	1620	4000
	1240	1480	1480	1800	1800	2250	1740	-
	1480	1600	1600	2040	2040	2460	1860	-
	1600	1840	1840	2200	2200	2985	1980	-
	1960	2080	2080	2520	2520	3510	2220	-
	2200	2200	2200	2840	2840	4000	2580	-
	2500	2500	2500	3000	3000	-	2940	-
	2860	2960	2980	3480	3480	-	3540	-
	3000	3520	3520	4000	4000	-	4000	-
	-	4000	4000	-	-	-	-	-
F	60	60	60	80	80	105	120	150
G	20	20	20	20	20	22.5	30	35
L0(Max length)	3,000	4,000	4,000	4,000	4,000	4,000	4,000	4,000

* If the maximum length exceeds this size, butt joints can be supplied.
* For more information about butt jointing, please refer to the page of safety design.
* If the G is not standard, please indicate it in the order sheet.

Bottom mounting rail (SBI-B type)

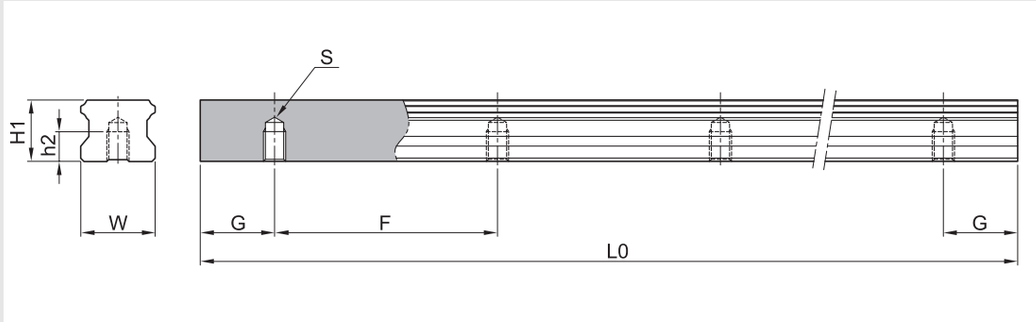

(Unit : mm)

Model number	W1	H1	S	h2	G	F	L0 (Max length)	Weight (kg/m)
SBI 15-B	15	13	M5X0.8	8	20	60	3,000	1.39
SBI 20-B	20	16.5	M6	9	20	60	4,000	2.37
SBI 25-B	23	20	M6	9	20	60	4,000	3.26
SBI 30-B	28	23	M8	12	20	80	4,000	4.63
SBI 35-B	34	26	M8	12	20	80	4,000	6.45
SBI 45-B	45	32	M12	18	22.5	105	4,000	10.49

* If the maximum length exceeds this size, please contact SBC.

Circular arc groove

Two pint contact structure of circular arc groove. It keeps the function of self-aligning and smooth rolling performance.

45° angle of contact

Four rows of circular arc groove contact balls at an angle of 45 degree. It provides the same load capacity in all directions.

DF structure

The same dimension

The Block Structure

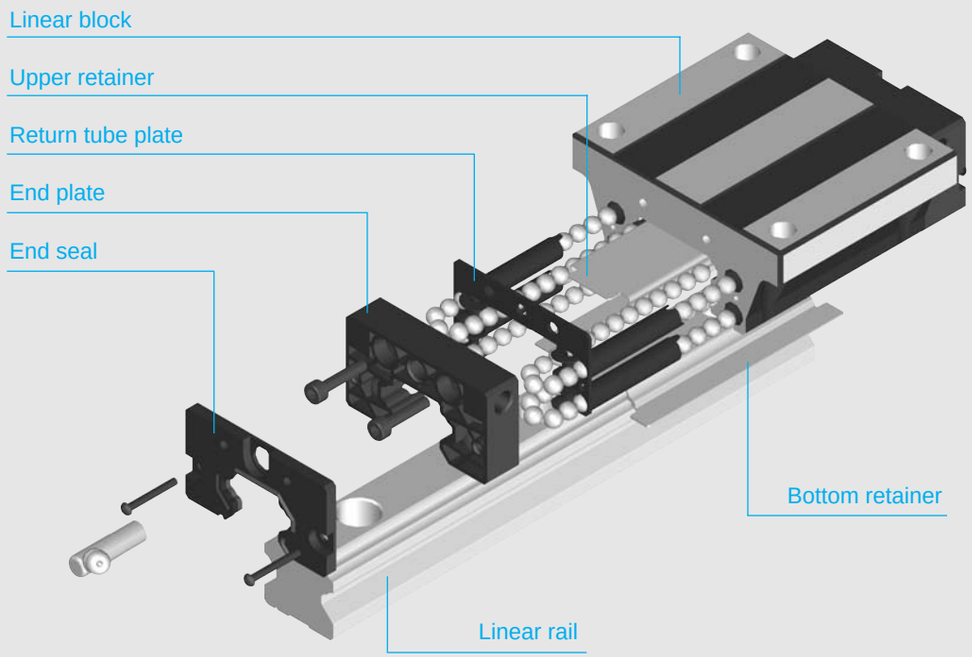

Linear rail The same rail profile may be used for every type of block (SBG, SBS, SPG and SPS). SBC uses only high strength and heat-treated special steels in all rails.

End seal New double lip structure which improves resistance to dust and particle contamination.

Linear block SBG, SBS, SPG and SPS types are available. All blocks are dimensionally interchangeable.

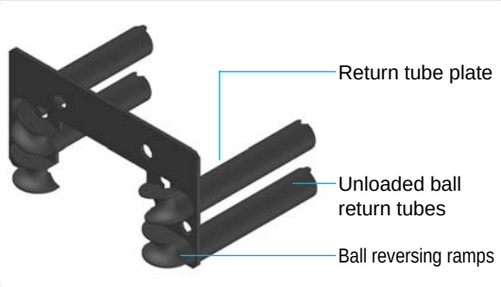

(Structure of return tube plate)

Single component Return tube & reversing plate structure Inserting a molded tube into the ball return paths keeps lubricant cleaner by providing better loose ball control and free lubricant flow while preventing metal to metal skidding contact with what is normally an imprecise return path wall.

※ Return tube plate is available for SBG(S), SPG(S) 20~35.

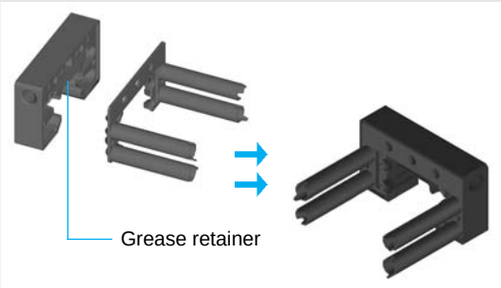

(Close fitting end-plate reduces grease loss)

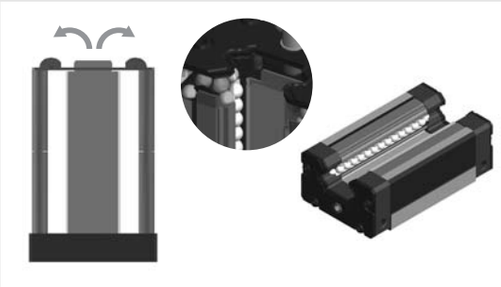

(Snap assembled)

Retainer Ball retainers are snap assembled to the internal body and end-plate without fixed position screws. The retainers can self align according to load orientation and direct the balls smoothly into the load zone. This function eliminates ball skid and hot zone pre-load creating smoother running and longer life. These new retainers are made of stainless steel (SUS304) and are corrosion resistant.

Bottom retainer is one body type with rubber seal to prevent contamination from bottom.

※ Bottom seal is not available for size 15 of SBG(S), SPG(S).

SBG type

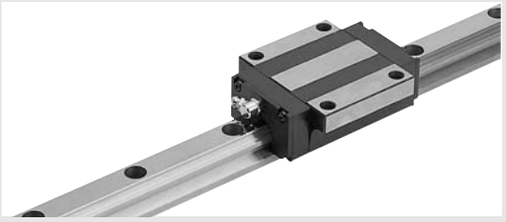

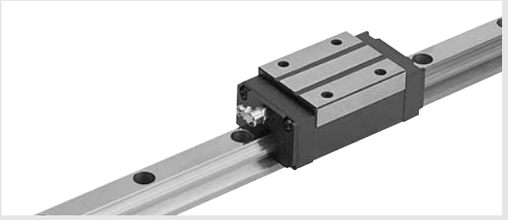

SBG is SBC standard linear block and FL, FLL, SL, SLL are available.

SBG-FL/FLL

-Flange type
-Size 15~65

SBG-SL/SLL

-Slim type
-Size 15~65

SBS type

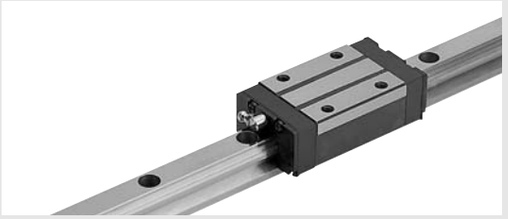

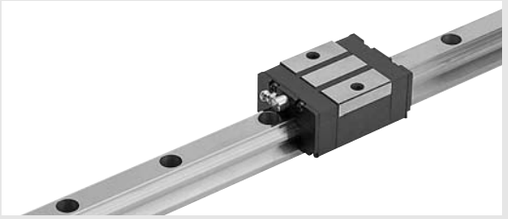

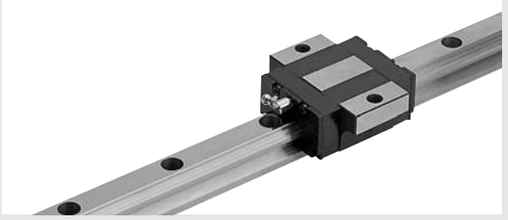

SBS type use same rail as SBG rail and the height is lower than SBG-SL type.

SBS-SL/SLL

-Slim type
-Size 15~45

SBS-HL/HLL

-SBS-SL (Height is higher than SBS-SL/SLL type)
-Size 25

SBS-FV

-Flange type with shorter length
-Size 15~25

SBS-SV

-Slim type with shorter length
-Size 15~25

SBG-FL/FLL

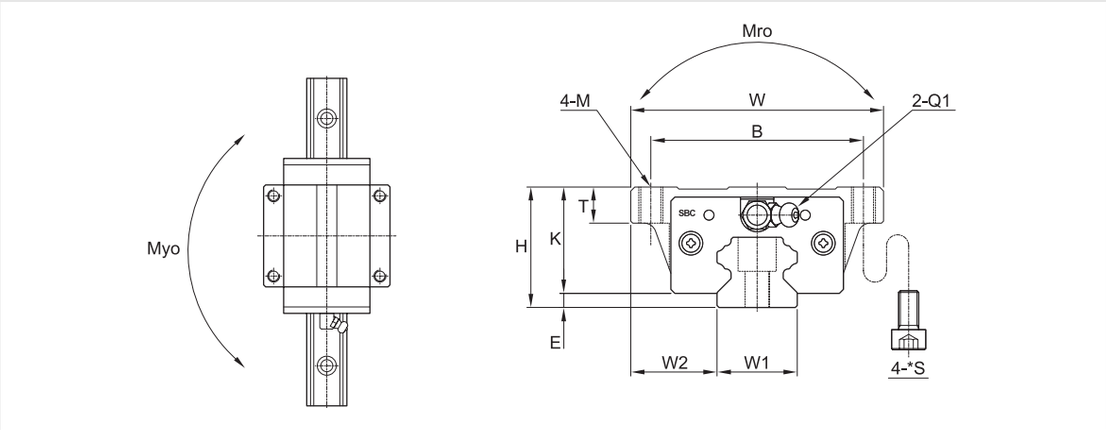

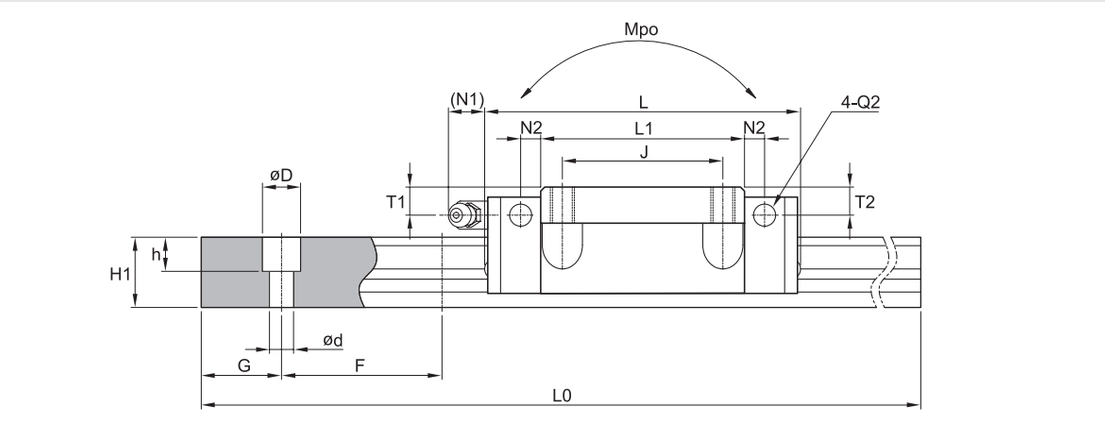

(Unit : mm)

Model	Mounting dimension				Block dimensions																									
	H	W	L	E	Mounting tap hole				L1	T	K	Grease fitting						Rail dimension								Basic load rating [kN]		Permissible static moment [kN • m]			Mass	
					B	J	M	*S				T1	N1	T2	N2	Q1	*Q2	W1	W2	H1	F	Bolt hole d	Bolt hole D	Bolt hole h	G	Max length of rail L0	C	Co	Mro	Mpo	Myo	Block [kg]	Rail [kg/m]
SBG15 FL	24	47	60.8	3	38	30	M5	M4	38.8	7.2	21	4	5	5.5	4.5	M4x0.7	Ø4	15	16	15	60	4.5	7.5	5.3	20	3000	8.33	13.4	0.07	0.05	0.05	0.18	1.45
SBG20 FL	30	63	77.2	3.5	53	40	M6	M5	50.8	9	26.5	7	9.8	11.7	5	M6x0.75	Ø6	20	21.5	17.5	60	6	9.5	8.5	20	4000	14.2	25	0.22	0.18	0.18	0.42	2.2
SBG20 FLL	30	63	93.2	3.5	53	40	M6	M5	66.8	9	26.5	7	9.8	11.7	5	M6x0.75	Ø6	20	21.5	17.5	60	6	9.5	8.5	20	4000	16.9	36.5	0.28	0.31	0.31	0.54	2.2
SBG25 FL	36	70	86.9	6.5	57	45	M8	M6	59.5	10	29.5	8.2	9.8	11.7	5.5	M6x0.75	Ø6	23	23.5	21.8	60	7	11	9	20	4000	20.9	39.2	0.35	0.31	0.3	0.62	3.1
SBG25 FLL	36	70	106.4	6.5	57	45	M8	M6	79	10	29.5	8.2	9.8	11.7	5.5	M6x0.75	Ø6	23	23.5	21.8	60	7	11	9	20	4000	24.6	48	0.43	0.49	0.48	0.78	3.1
SBG30 FL	42	90	100	7	72	52	M10	M8	70.4	12	35	8.5	10.7	11.7	5.5	M6x0.75	Ø6	28	31	25	80	9	14	12	20	4000	29.2	53.8	0.59	0.49	0.48	1.1	4.45
SBG30 FLL	42	90	122.5	7	72	52	M10	M8	92.9	12	35	8.5	10.7	11.7	5.5	M6x0.75	Ø6	28	31	25	80	9	14	12	20	4000	35.3	67.9	0.74	0.79	0.78	1.44	4.45
SBG35 FL	48	100	112.6	7.5	82	62	M10	M8	80.4	13	40.5	8	10.7	11.7	6	M6x0.75	Ø6	34	33	29	80	9	14	12	20	4000	38.8	68.6	0.94	0.74	0.72	1.57	6.4
SBG35 FLL	48	100	138.1	7.5	82	62	M10	M8	105.9	13	40.5	8	10.7	11.7	6	M6x0.75	Ø6	34	33	29	80	9	14	12	20	4000	46	90.4	1.24	1.3	1.28	2.14	6.4
SBG45 FL	60	120	140.4	10	100	80	M12	M10	98	15	50	10	11	16.5	8	PT1/8	Ø6	45	37.5	38	105	14	20	17	22.5	4000	61.6	110.6	1.98	1.56	1.54	2.96	11.25
SBG45 FLL	60	120	172.4	10	100	80	M12	M10	130	15	50	10	11	16.5	8	PT1/8	Ø6	45	37.5	38	105	14	20	17	22.5	4000	75.5	138.5	2.45	2.33	2.3	3.75	11.25
SBG55 FL	70	140	164.8	13	116	95	M14	M12	118	17	57	12	11	16.5	10	PT1/8	PT1/8	53	43.5	45	120	16	23	20	30	4000	91.2	156.9	3.37	2.69	2.65	4.49	15.25
SBG55 FLL	70	140	202.8	13	116	95	M14	M12	156	17	57	12	11	16.5	10	PT1/8	PT1/8	53	43.5	45	120	16	23	20	30	4000	111.8	196.6	4.19	4.05	3.97	5.68	15.25
SBG65 FL	90	170	195.2	17.5	142	110	M16	M14	147	23	72.5	15	11	16.5	10	PT1/8	PT1/8	63	53.5	58.5	150	18	26	22	35	4000	147.9	240.1	6.17	4.85	4.75	8.7	23.9
SBG65 FLL	90	170	255.2	17.5	142	110	M16	M14	207	23	72.5	15	11	16.5	10	PT1/8	PT1/8	63	53.5	58.5	150	18	26	22	35	4000	189.1	320.4	8.18	8.34	8.14	9.5	23.9

❶ C (Basic dynamic load rating), Co (Basic static load rating)

❷ *S: Bolt size for bottom mounting type of block.

❸ *Q2: The hole of side grease nipple is not made to prevent a foreign substance from going into inside. When you order the side grease nipple, we build it by ourselves.

SBG-SL/SLL

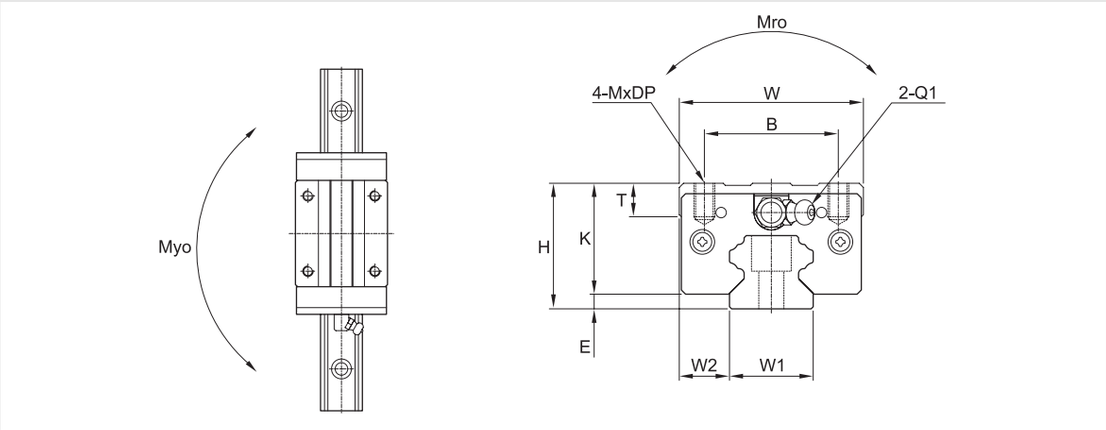

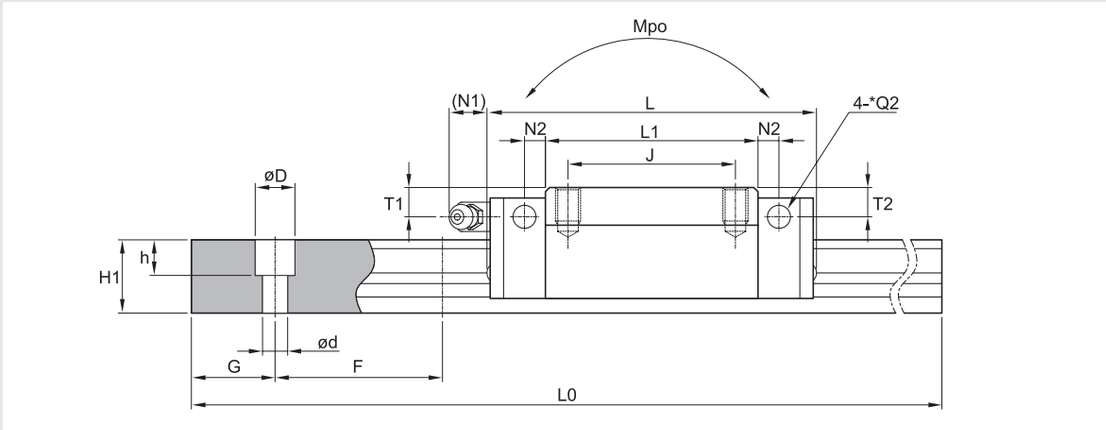

(Unit : mm)

Model	Mounting dimension				Block dimensions																										
	H	W	L	E	Mounting tap hole				L1	T	K	Grease fitting						Rail dimension									Basic load rating [kN]		Permissible static moment [kN • m]			Mass	
					B	J	M	DP				T1	N1	T2	N2	Q1	*Q2	W1	W2	H1	F	Bolt hole d	Bolt hole D	Bolt hole h	G	Max length of rail L0	C	Co	Mro	Mpo	Myo	Block [kg]	Rail [kg/m]
SBG15 SL	28	34	60.8	3	26	26	M4	5	38.8	8	25	8	5.5	8.5	4.5	M4x0.7	Ø4	15	9.5	15	60	4.5	7.5	5.3	20	3000	8.33	13.4	0.07	0.05	0.05	0.2	1.45
SBG20 SL	30	44	77.2	3.5	32	36	M5	8	50.8	8	26.5	7	11.7	7	5	M6x0.75	Ø6	20	12	17.5	60	6	9.5	8.5	20	4000	14.2	25	0.22	0.18	0.18	0.33	2.2
SBG20 SLL	30	44	93.2	3.5	32	50	M5	8	66.8	8	26.5	7	11.7	7	5	M6x0.75	Ø6	20	12	17.5	60	6	9.5	8.5	20	4000	16.9	36.5	0.28	0.31	0.31	0.45	2.2
SBG25 SL	40	48	86.9	6.5	35	35	M6	8	59.5	12	33.5	12.2	11.7	12.1	5.5	M6x0.75	Ø6	23	12.5	21.8	60	7	11	9	20	4000	20.9	39.2	0.35	0.31	0.3	0.56	3.1
SBG25 SLL	40	48	106.4	6.5	35	50	M6	8	79	12	33.5	12.2	11.7	12.1	5.5	M6x0.75	Ø6	23	12.5	21.8	60	7	11	9	20	4000	24.6	48	0.43	0.49	0.48	0.73	3.1
SBG30 SL	45	60	100	7	40	40	M8	10	70.4	12	38	11.5	11.7	11.5	5.5	M6x0.75	Ø6	28	16	25	80	9	14	12	20	4000	29.2	53.8	0.59	0.49	0.48	0.98	4.45
SBG30 SLL	45	60	122.5	7	40	60	M8	10	92.9	12	38	11.5	11.7	11.5	5.5	M6x0.75	Ø6	28	16	25	80	9	14	12	20	4000	35.3	67.9	0.74	0.79	0.78	1.28	4.45
SBG35 SL	55	70	112.6	7.5	50	50	M8	12	80.4	15	47.5	15	11.7	15	6	M6x0.75	Ø6	34	18	29	80	9	14	12	20	4000	38.8	68.6	0.94	0.74	0.72	1.63	6.4
SBG35 SLL	55	70	138.1	7.5	50	72	M8	12	105.9	15	47.5	15	11.7	15	6	M6x0.75	Ø6	34	18	29	80	9	14	12	20	4000	46	90.4	1.24	1.3	1.28	2.12	6.4
SBG45 SL	70	86	140.4	10	60	60	M10	13	98	15	60	15	16.5	20	8	PT1/8	Ø6	45	20.5	38	105	14	20	17	22.5	4000	61.6	110.6	1.98	1.56	1.54	2.96	11.25
SBG45 SLL	70	86	172.4	10	60	80	M10	13	130	15	60	15	16.5	20	8	PT1/8	Ø6	45	20.5	38	105	14	20	17	22.5	4000	75.5	138.5	2.45	2.33	2.3	3.75	11.25
SBG55 SL	80	100	164.8	13	75	75	M12	18	118	18	67	18	16.5	20.5	10	PT1/8	PT1/8	53	23.5	45	120	16	23	20	30	4000	91.2	156.9	3.37	2.69	2.65	4.52	15.25
SBG55 SLL	80	100	202.8	13	75	95	M12	18	156	18	67	18	16.5	20.5	10	PT1/8	PT1/8	53	23.5	45	120	16	23	20	30	4000	111.8	196.6	4.19	4.05	3.97	5.68	15.25
SBG65 SL	90	126	195.2	17.5	76	70	M16	20	147	23	72.5	23	16.5	12	10	PT1/8	PT1/8	63	31.5	58.5	150	18	26	22	35	4000	147.9	240.1	6.17	4.85	4.75	7.43	23.9
SBG65 SLL	90	126	255.2	17.5	76	120	M16	20	207	23	72.5	23	16.5	12	10	PT1/8	PT1/8	63	31.5	58.5	150	18	26	22	35	4000	189.1	320.4	8.18	8.34	8.14	12.05	23.9

❶ C (Basic dynamic load rating), Co (Basic static load rating)

❷ *Q2: The hole of side grease nipple is not made to prevent a foreign substance from going into inside. When you order the side grease nipple, we build it by ourselves.

SBS-SL, HL/SLL, HLL

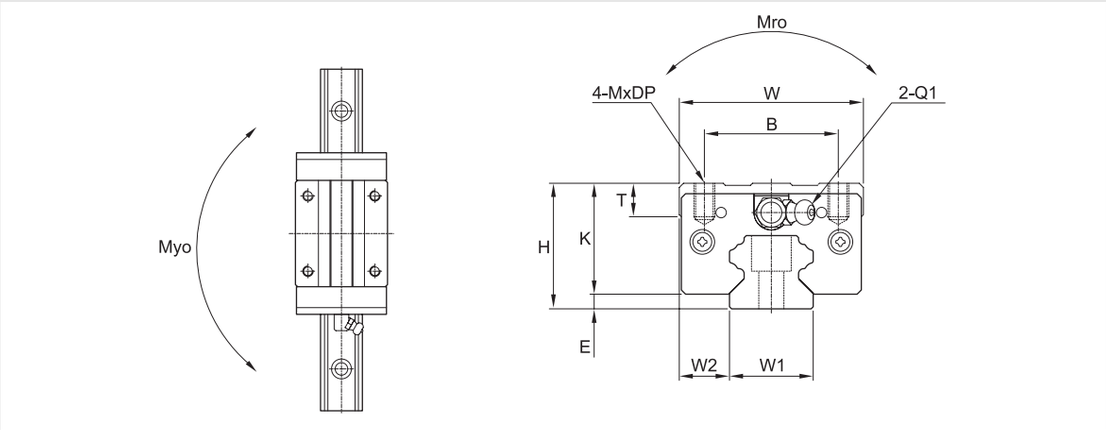

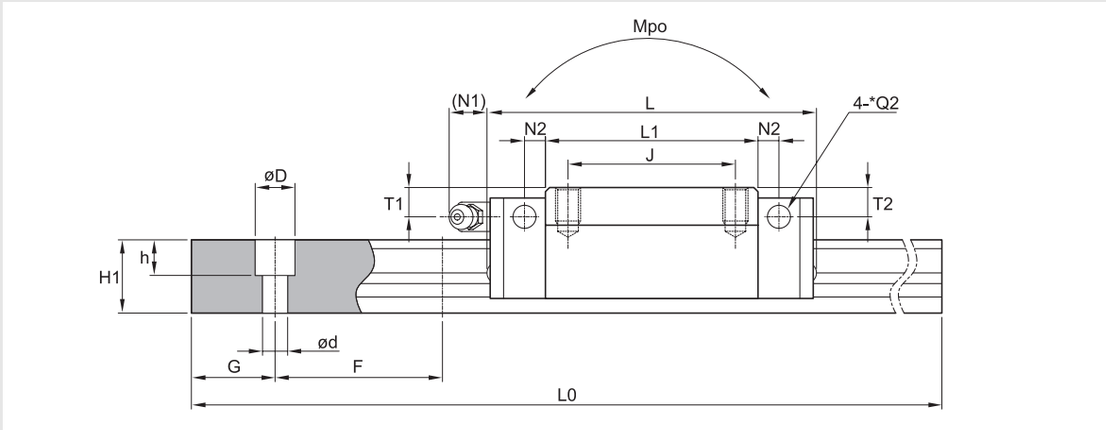

(Unit : mm)

Model	Mounting dimension				Block dimensions													
	H	W	L	E	Mounting tap hole				L1	T	K	Grease fitting						
					B	J	M	DP				T1	N1	T2	N2	Q1	*Q2
SBS15 SL	24	34	60.8	3	26	26	M4	5	38.8	6	21	4	5.5	4.5	4.5	M4x0.7	Ø4
SBS20 SL	28	44	77.2	3.5	32	32	M5	7	50.8	7.5	24.5	5	11.7	5	5	M6x0.75	Ø6
SBS20 SLL	28	44	93.2	3.5	32	50	M5	7	66.8	7.5	24.5	5	11.7	5	5	M6x0.75	Ø6
SBS25 SL	33	48	86.9	6.5	35	35	M6	6	59.5	8	26.5	5.2	11.7	5.1	5.5	M6x0.75	Ø6
SBS25 SLL	33	48	106.4	6.5	35	50	M6	6	79	8	26.5	5.2	11.7	5.1	5.5	M6x0.75	Ø6
SBS25 HL	36	48	86.9	6.5	35	35	M6	8	59.5	11	29.5	8.2	11.7	8.1	5.5	M6x0.75	Ø6
SBS25 HLL	36	48	106.4	6.5	35	50	M6	8	79	11	29.5	8.2	11.7	8.1	5.5	M6x0.75	Ø6
SBS30 SL	42	60	100	7	40	40	M8	10	70.4	12	35	8.5	11.7	8.5	5.5	M6x0.75	Ø6
SBS30 SLL	42	60	122.5	7	40	60	M8	10	92.9	12	35	8.5	11.7	8.5	5.5	M6x0.75	Ø6
SBS35 SL	48	70	112.6	7.5	50	50	M8	12	80.4	15	40.5	8	11.7	8	6	M6x0.75	Ø6
SBS35 SLL	48	70	138.1	7.5	50	72	M8	12	105.9	15	40.5	8	11.7	8	6	M6x0.75	Ø6
SBS45 SL	60	86	140.4	10	60	60	M10	10	98	15	50	10	16.5	10	8	PT1/8	PT1/8
SBS45 SLL	60	86	172.4	10	60	80	M10	10	130	15	50	10	16.5	10	8	PT1/8	PT1/8

Rail dimension									Basic load rating [kN]		Permissible static moment [kN • m]			Mass	
W1	W2	H1	F	Bolt hole			G	Max length of rail L0	C	Co	Mro	Mpo	Myo	Block [kg]	Rail [kg/m]
				d	D	h									
15	9.5	15	60	4.5	7.5	5.3	20	3000	8.33	13.4	0.07	0.05	0.05	0.2	1.45
20	12	17.5	60	6	9.5	8.5	20	4000	14.2	25	0.22	0.18	0.18	0.33	2.2
20	12	17.5	60	6	9.5	8.5	20	4000	16.9	36.5	0.28	0.31	0.31	0.45	2.2
23	12.5	21.8	60	7	11	9	20	4000	20.9	39.2	0.35	0.31	0.3	0.56	3.1
23	12.5	21.8	60	7	11	9	20	4000	24.6	48	0.43	0.49	0.48	0.73	3.1
23	12.5	21.8	60	7	11	9	20	4000	20.9	39.2	0.35	0.31	0.3	0.98	3.1
23	12.5	21.8	60	7	11	9	20	4000	24.6	48	0.43	0.49	0.48	1.28	3.1
28	16	25	80	9	14	12	20	4000	29.2	53.8	0.59	0.49	0.48	0.98	4.45
28	16	25	80	9	14	12	20	4000	35.3	67.9	0.74	0.79	0.78	1.28	4.45
34	18	29	80	9	14	12	20	4000	38.8	68.6	0.94	0.74	0.72	1.63	6.4
34	18	29	80	9	14	12	20	4000	46	90.4	1.24	1.3	1.28	2.12	6.4
45	20.5	38	105	14	20	17	22.5	4000	61.6	110.6	1.98	1.56	1.54	2.96	11.25
45	20.5	38	105	14	20	17	22.5	4000	75.5	138.5	2.45	2.33	2.3	3.75	11.25

❶ C (Basic dynamic load rating), Co (Basic static load rating)

❷ *Q2: The hole of side grease nipple is not made to prevent a foreign substance from going into inside.
When you order the side grease nipple, we build it by ourselves.

Return to Table of Contents

SBS-FV

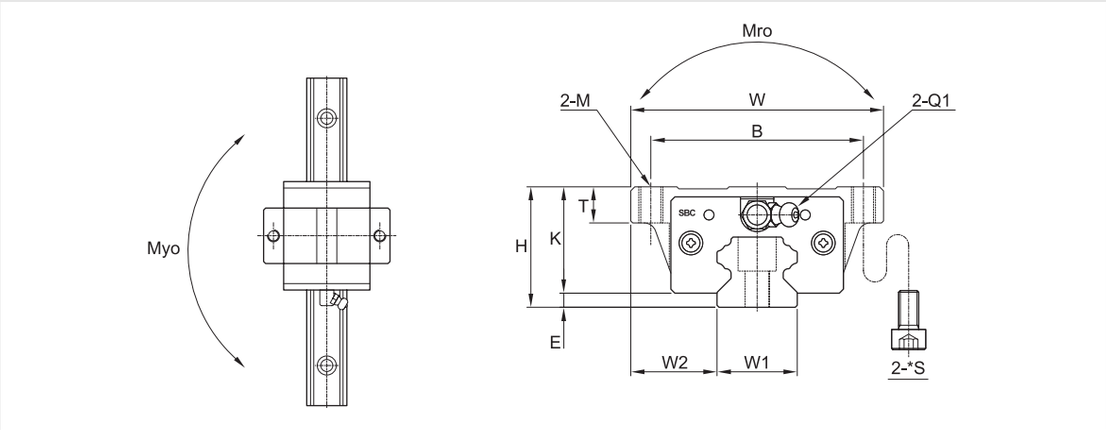

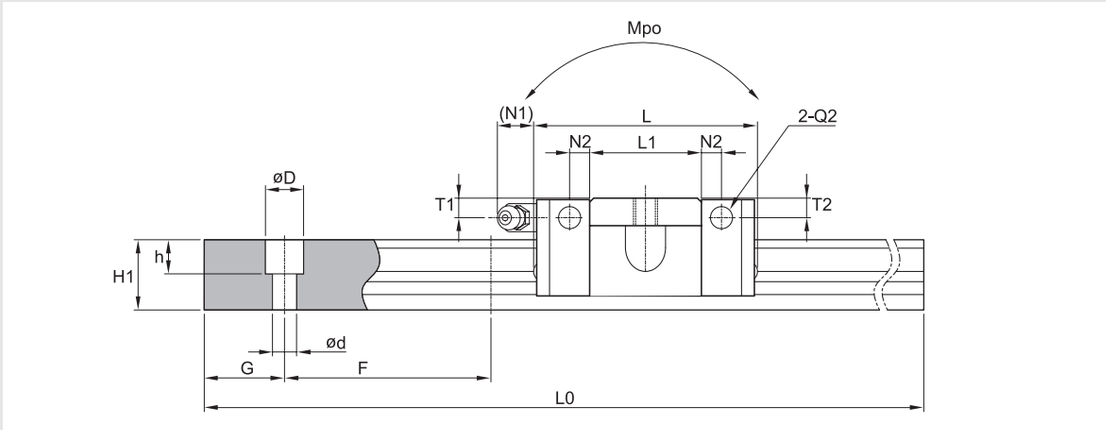

(Unit : mm)

Model	Mounting dimension				Block dimensions											
	H	W	L	E	Mounting tap hole			L1	T	K	Grease fitting					
					B	M	*S				T1	N1	T2	N2	Q1	*Q2
SBS15 FV	24	47	44.9	3	38	M5	M4	22.9	7.2	21	4	5.5	4.5	4.5	M4x0.7	Ø4
SBS20 FV	28	63	54.2	3.5	53	M6	M5	27.8	7	24.5	5	11.7	5	5	M6x0.75	Ø6
SBS25 FV	33	70	62.6	6.5	57	M8	M6	35.2	7	26.5	5.2	11.7	5.1	5.5	M6x0.75	Ø6

Rail dimension									Basic load rating [kN]		Permissible static moment [kN • m]			Mass	
W1	W2	H1	F	Bolt hole			G	Max length of rail L0	C	Co	Mro	Mpo	Myo	Block [kg]	Rail [kg/m]
				d	D	h									
15	16	15	60	4.5	7.5	5.3	20	3000	4.48	7.23	0.04	0.03	0.03	0.1	1.45
20	21.5	17.5	60	6	9.5	8.5	20	4000	7.65	13.5	0.12	0.1	0.1	0.24	2.2
23	23.5	21.8	60	7	11	9	20	4000	11.29	21.1	0.19	0.17	0.17	0.37	3.1

❶ C (Basic dynamic load rating), Co (Basic static load rating)

❷ *S: Bolt size for bottom mounting type of block.

❸ *Q2: The hole of side grease nipple is not made to prevent a foreign substance from going into inside.
When you order the side grease nipple, we build it by ourselves.

Return to Table of Contents

SBS-SV

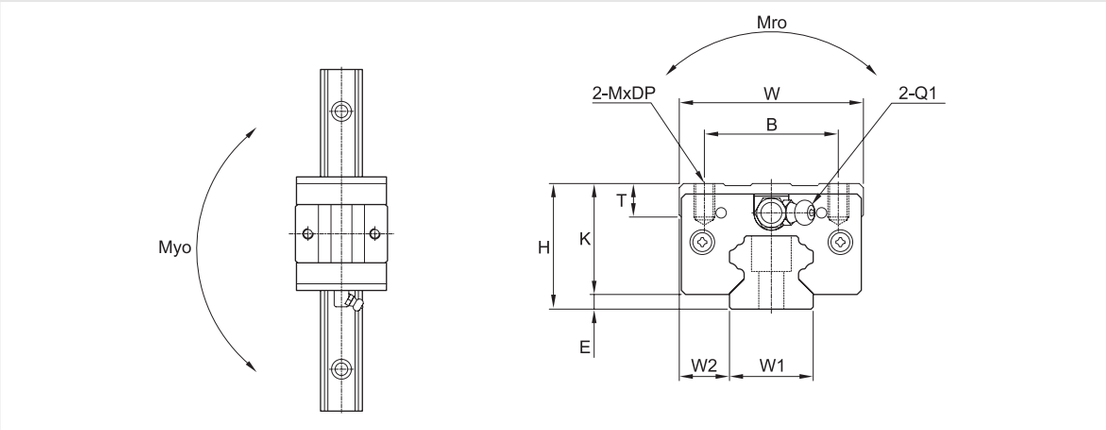

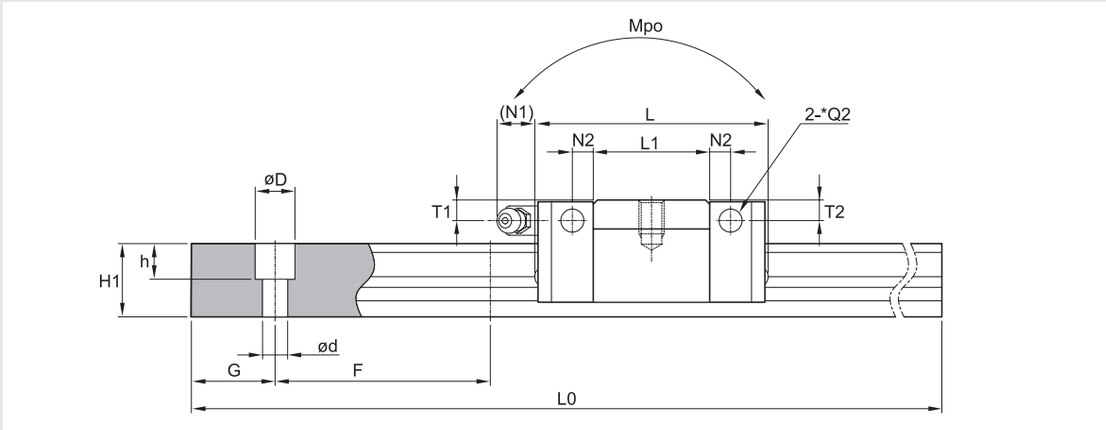

(Unit : mm)

Model	Mounting dimension				Block dimensions											
	H	W	L	E	Mounting tap hole			L1	T	K	Grease fitting					
					B	M	DP				T1	N1	T2	N2	Q1	*Q2
SBS15 SV	24	34	44.9	3	26	M4	5	22.9	6	21	4	5.5	4.5	4.5	M4x0.7	Ø4
SBS20 SV	28	44	54.2	3.5	32	M5	7	27.8	7.5	24.5	5	11.7	5	5	M6x0.75	Ø6
SBS25 SV	33	48	62.6	6.5	35	M6	6	35.2	8	26.5	5.2	11.7	5.1	5.5	M6x0.75	Ø6

Rail dimension									Basic load rating [kN]		Permissible static moment [kN • m]			Mass	
W1	W2	H1	F	Bolt hole			G	Max length of rail L0	C	Co	Mro	Mpo	Myo	Block [kg]	Rail [kg/m]
				d	D	h									
15	9.5	15	60	4.5	7.5	5.3	20	3000	4.48	7.23	0.04	0.03	0.03	0.1	1.45
20	12	17.5	60	6	9.5	8.5	20	4000	7.65	13.5	0.12	0.1	0.1	0.19	2.2
23	12.5	21.8	60	7	11	9	20	4000	11.29	21.1	0.19	0.17	0.17	0.32	3.1

❶ C (Basic dynamic load rating), Co (Basic static load rating)

❷ *Q2: The hole of side grease nipple is not made to prevent a foreign substance from going into inside.
When you order the side grease nipple, we build it by ourselves.

SPG / SPS Spacer Linear Rail System

SPG / SPS Spacer Linear Rail System

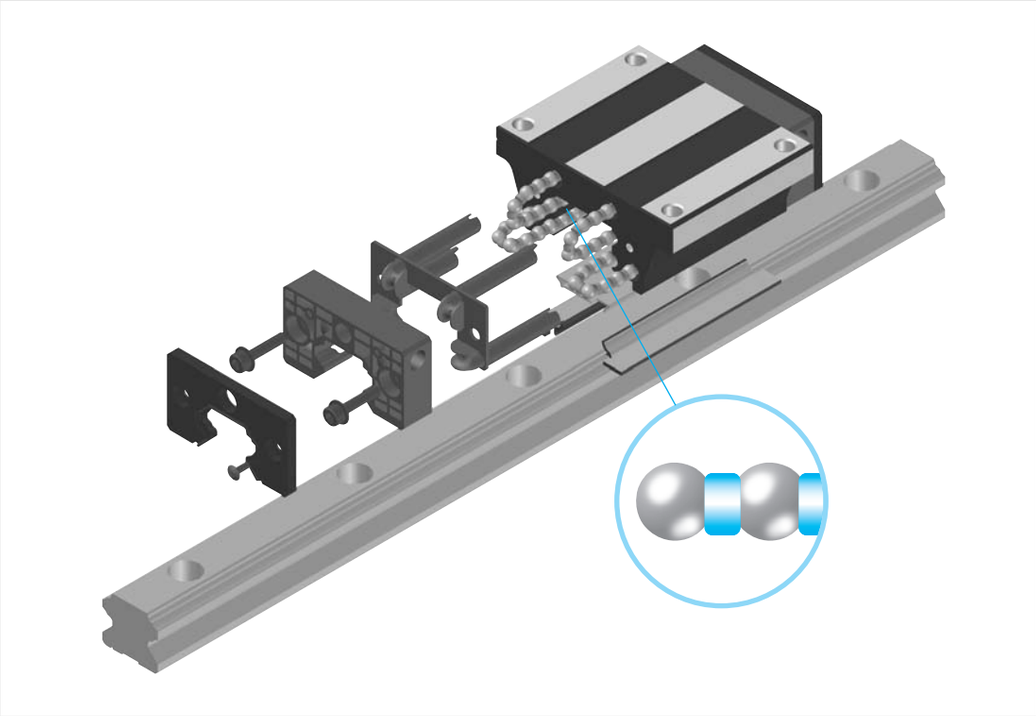

[Design feature]

SPG, SPS type is ball spacer inserted type between balls. This spacer minimizes the noise level by eliminating metal to metal contact and storing grease which provides long term, maintenance free operation.

[Using SBG standard rail]

SPG, SPS type are using SBG standard rail.

[Dimensionally interchangeable with SBG type]

SPG/SPS spacer series blocks are dimensionally interchangeable with SBG/SBS blocks.

[Noise level test for SBG35 and SPG35]

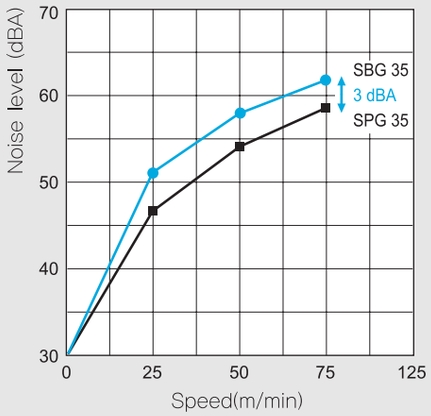

(Comparison of noise level)

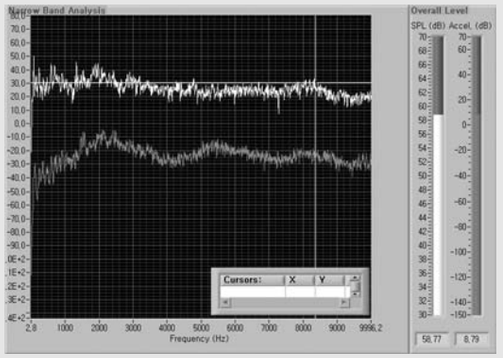

(SPG35 1.3m/sec)

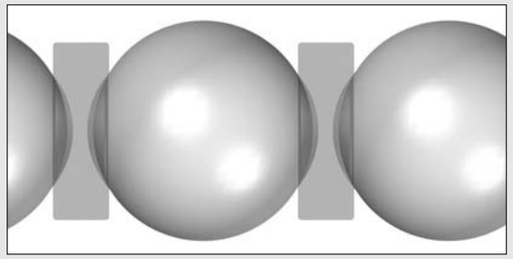

[Grease retention]

The spacers provide grease storage areas providing long term, maintenance free operation.

[Ordering example]

Ordering example for SPG/SPS type are identical with SBG type ordering. Therefore, please see the ordering example for SBG type.

SPG-FL/FLL

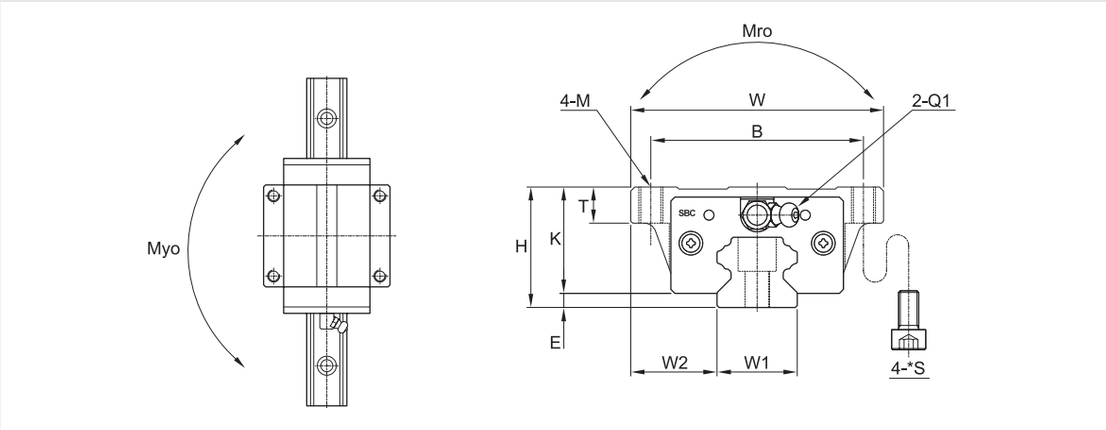

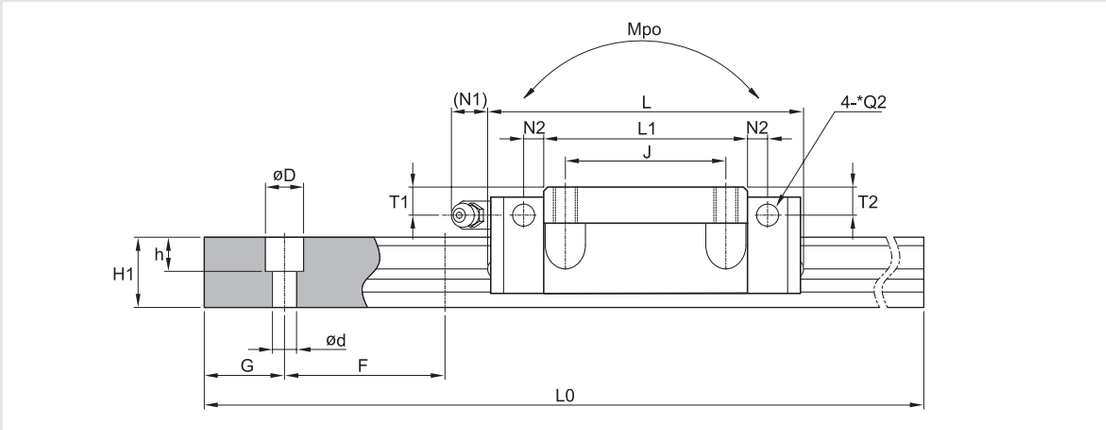

(Unit : mm)

Model	Mounting dimension				Block dimensions																										
	H	W	L	E	Mounting tap hole				L1	T	K	Grease fitting						Rail dimension									Basic load rating [kN]		Permissible static moment [kN • m]			Mass	
					B	J	M	*S				T1	N1	T2	N2	Q1	*Q2	W1	W2	H1	F	Bolt hole d	Bolt hole D	Bolt hole h	G	Max length of rail L0	C	Co	Mro	Mpo	Myo	Block [kg]	Rail [kg/m]
SPG20 FL	30	63	77.2	3.5	53	40	M6	M5	50.8	9	26.5	7	11.7	7	5	M6x0.75	Ø6	20	21.5	17.5	60	6	9.5	8.5	20	4000	14.2	25	0.22	0.18	0.18	0.42	2.2
SPG20 FLL	30	63	93.2	3.5	53	40	M6	M5	66.8	9	26.5	7	11.7	7	5	M6x0.75	Ø6	20	21.5	17.5	60	6	9.5	8.5	20	4000	16.9	36.5	0.28	0.31	0.31	0.54	2.2
SPG25 FL	36	70	86.9	6.5	57	45	M8	M6	59.5	10	29.5	8.2	11.7	8.1	5.5	M6x0.75	Ø6	23	23.5	21.8	60	7	11	9	20	4000	20.9	39.2	0.35	0.31	0.3	0.62	3.1
SPG25 FLL	36	70	106.4	6.5	57	45	M8	M6	79	10	29.5	8.2	11.7	8.1	5.5	M6x0.75	Ø6	23	23.5	21.8	60	7	11	9	20	4000	24.6	48	0.43	0.49	0.48	0.78	3.1
SPG30 FL	42	90	100	7	72	52	M10	M8	70.4	12	35	8.5	11.7	8.5	5.5	M6x0.75	Ø6	28	31	25	80	9	14	12	20	4000	29.2	53.8	0.59	0.49	0.48	1.1	4.45
SPG30 FLL	42	90	122.5	7	72	52	M10	M8	92.9	12	35	8.5	11.7	8.5	5.5	M6x0.75	Ø6	28	31	25	80	9	14	12	20	4000	35.3	67.9	0.74	0.79	0.78	1.44	4.45
SPG35 FL	48	100	112.6	7.5	82	62	M10	M8	80.4	13	40.5	8	11.7	8	6	M6x0.75	Ø6	34	33	29	80	9	14	12	20	4000	38.8	68.6	0.94	0.74	0.72	1.57	6.4
SPG35 FLL	48	100	138.1	7.5	82	62	M10	M8	105.9	13	40.5	8	11.7	8	6	M6x0.75	Ø6	34	33	29	80	9	14	12	20	4000	46	90.4	1.24	1.3	1.28	2.14	6.4

❶ C (Basic dynamic load rating), Co (Basic static load rating)

❷ *S: Bolt size for bottom mounting type of block.

❸ *Q2: The hole of side grease nipple is not made to prevent a foreign substance from going into inside.
When you order the side grease nipple, we build it by ourselves.

SPG-SL/SL

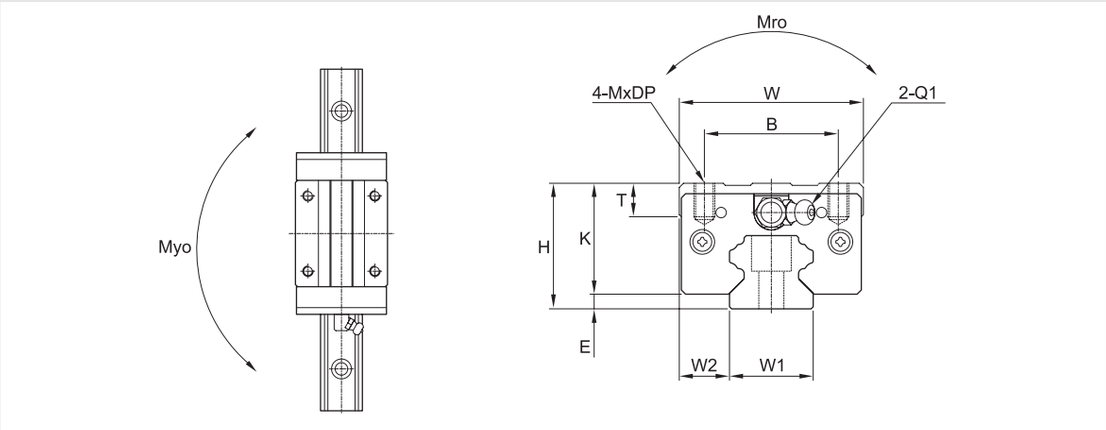

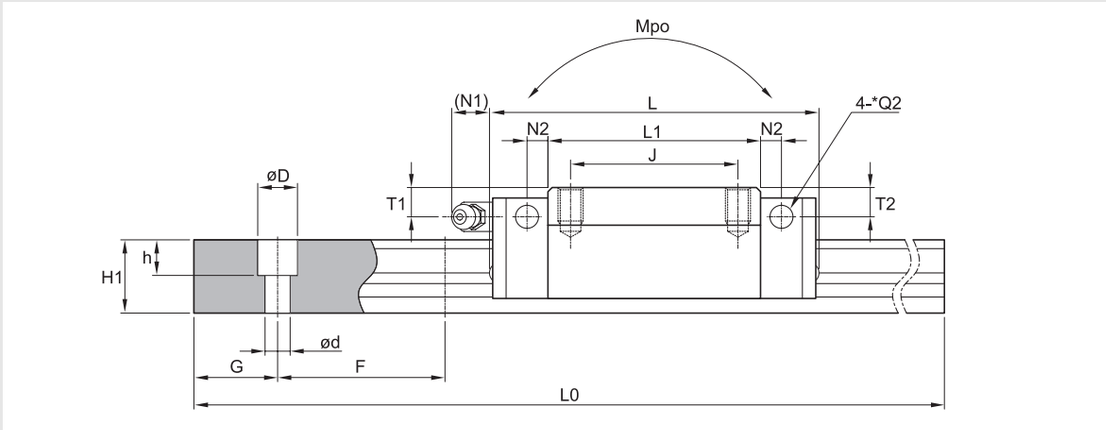

(Unit : mm)

Model	Mounting dimension				Block dimensions																										
	H	W	L	E	Mounting tap hole				L1	T	K	Grease fitting						Rail dimension									Basic load rating [kN]		Permissible static moment [kN • m]			Mass	
					B	J	M	DP				T1	N1	T2	N2	Q1	*Q2	W1	W2	H1	F	Bolt hole d	Bolt hole D	Bolt hole h	G	Max langth of rail L0	C	Co	Mro	Mpo	Myo	Block [kg]	Rail [kg/m]
SPG20 SL	30	44	77.2	3.5	32	36	M5	8	50.8	8	26.5	8	11.7	7	5	M6x0.75	Ø6	20	12	17.5	60	6	9.5	8.5	20	4000	14.2	25	0.22	0.18	0.18	0.33	2.2
SPG20 SLL	30	44	93.2	3.5	32	50	M5	8	66.8	8	26.5	8	11.7	7	5	M6x0.75	Ø6	20	12	17.5	60	6	9.5	8.5	20	4000	16.9	36.5	0.28	0.31	0.31	0.45	2.2
SPG25 SL	40	48	86.9	6.5	35	35	M6	8	59.5	12	33.5	12	11.7	12.2	5.5	M6x0.75	Ø6	23	12.5	21.8	60	7	11	9	20	4000	20.9	39.2	0.35	0.31	0.3	0.56	3.1
SPG25 SLL	40	48	106.4	6.5	35	50	M6	8	79	12	33.5	12	11.7	12.2	5.5	M6x0.75	Ø6	23	12.5	21.8	60	7	11	9	20	4000	24.6	48	0.43	0.49	0.48	0.73	3.1
SPG30 SL	45	60	100	7	40	40	M8	10	70.4	12	38	12	11.7	11.5	5.5	M6x0.75	Ø6	28	16	25	80	9	14	12	20	4000	29.2	53.8	0.59	0.49	0.48	0.98	4.45
SPG30 SLL	45	60	122.5	7	40	60	M8	10	92.9	12	38	12	11.7	11.5	5.5	M6x0.75	Ø6	28	16	25	80	9	14	12	20	4000	35.3	67.9	0.74	0.79	0.78	1.28	4.45
SPG35 SL	55	70	112.6	7.5	50	50	M8	12	80.4	15	47.5	15	11.7	15	6	M6x0.75	Ø6	34	18	29	80	9	14	12	20	4000	38.8	68.6	0.94	0.74	0.72	1.63	6.4
SPG35 SLL	55	70	138.1	7.5	50	72	M8	12	105.9	15	47.5	15	11.7	15	6	M6x0.75	Ø6	34	18	29	80	9	14	12	20	4000	46	90.4	1.24	1.3	1.28	2.12	6.4

❶ C (Basic dynamic load rating), Co (Basic static load rating)

❷ *Q2: The hole of side grease nipple is not made to prevent a foreign substance from going into inside.
When you order the side grease nipple, we build it by ourselves.

SPG / SPS Spacer Linear Rail System

SPS-SL, HL/SLL, HL

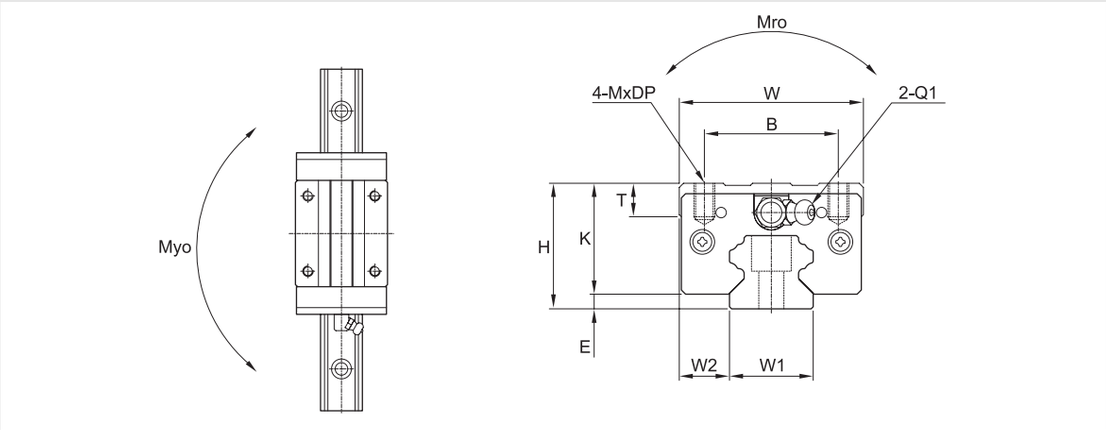

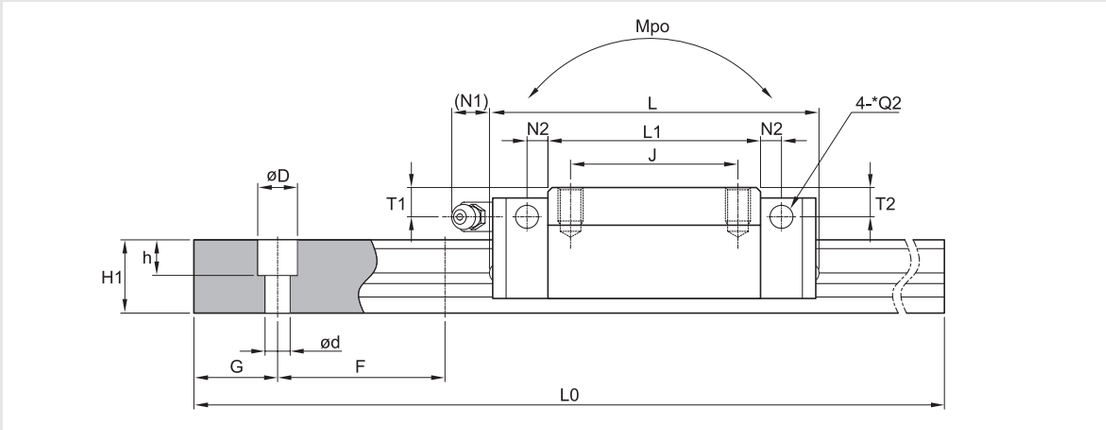

(Unit : mm)

Model	Mounting dimension				Block dimensions												
	H	W	L	E	Mounting tap hole				L1	T	K	Grease fitting					
					B	J	M	DP				T1	N1	T2	N2	Q1	*Q2
SPS20 SL	28	44	77.2	3.5	32	32	M5	7	50.8	7.5	24.5	5	11.7	5	5	M6x0.75	Ø6
SPS20 SLL	28	44	93.2	3.5	32	50	M5	7	66.8	7.5	24.5	5	11.7	5	5	M6x0.75	Ø6
SPS25 SL	33	48	86.9	6.5	35	35	M6	6	59.5	8	26.5	5.2	11.7	5.1	5.5	M6x0.75	Ø6
SPS25 SLL	33	48	106.4	6.5	35	50	M6	6	79	8	26.5	5.2	11.7	5.1	5.5	M6x0.75	Ø6
SPS25 HL	36	48	86.9	6.5	35	35	M6	8	59.5	11	29.5	8.2	11.7	8.1	5.5	M6x0.75	Ø6
SPS25 HLL	36	48	106.4	6.5	35	50	M6	8	79	11	29.5	8.2	11.7	8.1	5.5	M6x0.75	Ø6
SPS30 SL	42	60	100	7	40	40	M8	10	70.4	12	35	8.5	11.7	8.5	5.5	M6x0.75	Ø6
SPS30 SLL	42	60	122.5	7	40	60	M8	10	92.9	12	35	8.5	11.7	8.5	5.5	M6x0.75	Ø6
SPS35 SL	48	70	112.6	7.5	50	50	M8	12	80.4	15	40.5	8	11.7	8	6	M6x0.75	Ø6
SPS35 SLL	48	70	138.1	7.5	50	72	M8	12	105.9	15	40.5	8	11.7	8	6	M6x0.75	Ø6

Rail dimension									Basic load rating [kN]		Permissible static moment [kN • m]			Mass	
W1	W2	H1	F	Bolt hole			G	Max langth of rail L0	C	Co	Mro	Mpo	Myo	Block [kg]	Rail [kg/m]
				d	D	h									
20	12	17.5	60	6	9.5	8.5	20	4000	14.2	25	0.22	0.18	0.18	0.33	2.2
20	12	17.5	60	6	9.5	8.5	20	4000	16.9	36.5	0.28	0.31	0.31	0.45	2.2
23	12.5	21.8	60	7	11	9	20	4000	20.9	39.2	0.35	0.31	0.3	0.56	3.1
23	12.5	21.8	60	7	11	9	20	4000	24.6	48	0.43	0.49	0.48	0.73	3.1
23	12.5	21.8	60	7	11	9	20	4000	20.9	39.2	0.35	0.31	0.3	0.98	3.1
23	12.5	21.8	60	7	11	9	20	4000	24.6	48	0.43	0.49	0.48	1.28	3.1
28	16	25	80	9	14	12	20	4000	29.2	53.8	0.59	0.49	0.48	0.98	4.45
28	16	25	80	9	14	12	20	4000	35.3	67.9	0.74	0.79	0.78	1.28	4.45
34	18	29	80	9	14	12	20	4000	38.8	68.6	0.94	0.74	0.72	1.63	6.4
34	18	29	80	9	14	12	20	4000	46	90.4	1.24	1.3	1.28	2.12	6.4

❶ C (Basic dynamic load rating), Co (Basic static load rating)

❷ *Q2: The hole of side grease nipple is not made to prevent a foreign substance from going into inside.
When you order the side grease nipple, we build it by ourselves.

Return to Table of Contents

SPS-FV

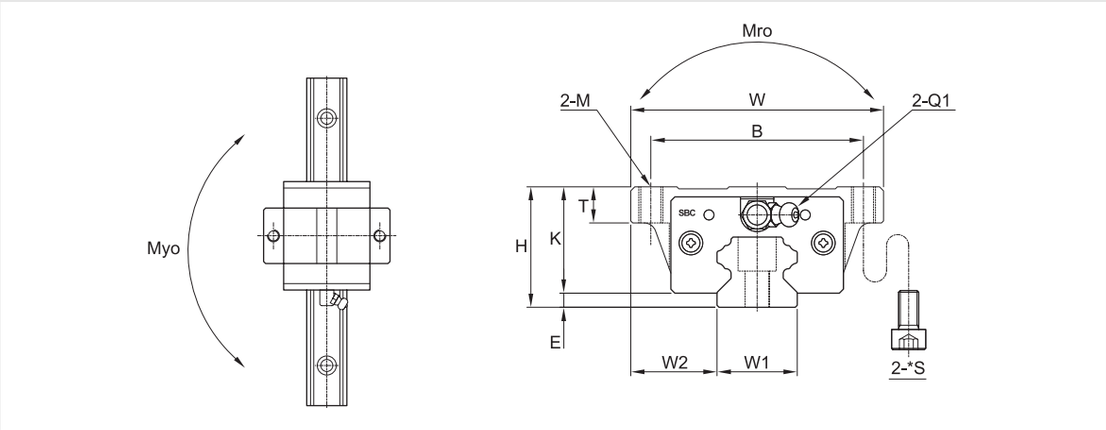

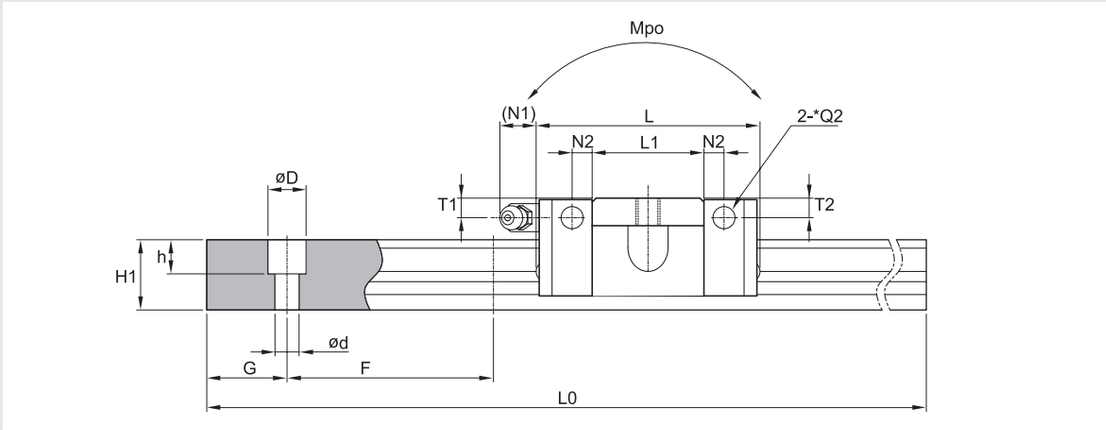

(Unit : mm)

Model	Mounting dimension				Block dimensions											
	H	W	L	E	Mounting tap hole			L1	T	K	Grease fitting					
					B	M	*S				T1	N1	T2	N2	Q1	*Q2
SPS20 FV	28	63	54.2	3.5	53	M6	M5	27.8	7	24.5	5	11.7	5	5	M6x0.75	Ø6
SPS25 FV	33	70	62.6	6.5	57	M8	M6	35.2	7	26.5	5.2	11.7	5.1	5.5	M6x0.75	Ø6

Rail dimension									Basic load rating [kN]		Permissible static moment [kN • m]			Mass	
W1	W2	H1	F	Bolt hole			G	Max length of rail L0	C	Co	Mro	Mpo	Myo	Block [kg]	Rail [kg/m]
				d	D	h									
20	21.5	17.5	60	6	9.5	8.5	20	4000	7.65	13.5	0.12	0.1	0.1	0.24	2.2
23	23.5	21.8	60	7	11	9	20	4000	11.29	21.1	0.19	0.17	0.17	0.37	3.1

❶ C (Basic dynamic load rating), Co (Basic static load rating)

❷ *S: Bolt size for bottom mounting type of block.

❸ *Q2: The hole of side grease nipple is not made to prevent a foreign substance from going into inside.
When you order the side grease nipple, we build it by ourselves.

SPS-SV

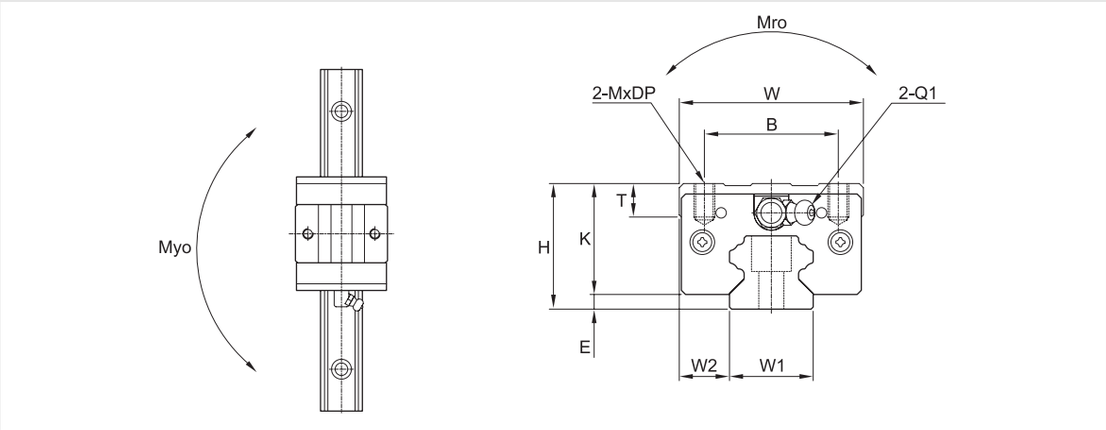

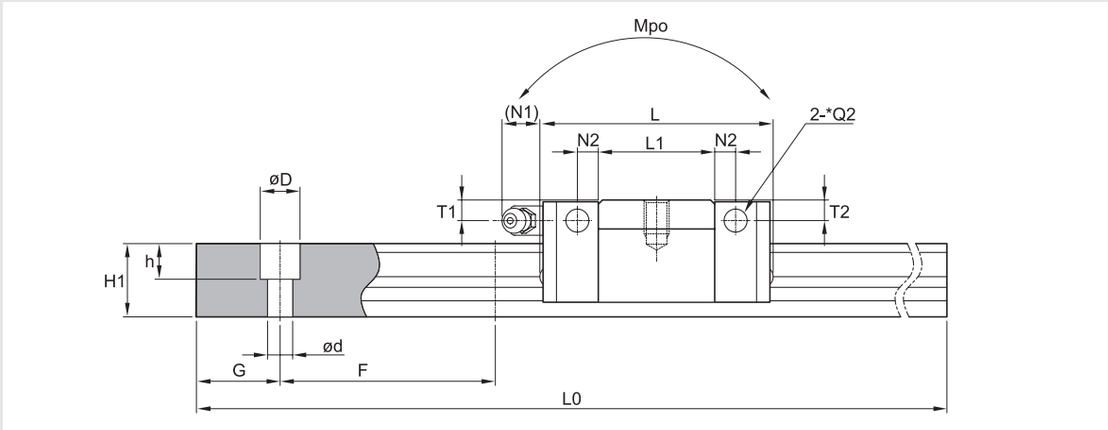

(Unit : mm)

Model	Mounting dimension				Block dimensions											
	H	W	L	E	Mounting tap hole			L1	T	K	Grease fitting					
					B	M	DP				T1	N1	T2	N2	Q1	*Q2
SPS20 SV	28	44	54.2	3.5	32	M5	7	27.8	7.5	24.5	5	11.7	5	5	M6x0.75	Ø6
SPS25 SV	33	48	62.6	6.5	35	M6	6	35.2	8	26.5	5.2	11.7	5.1	5.5	M6x0.75	Ø6

Rail dimension									Basic load rating [kN]		Permissible static moment [kN • m]			Mass	
W1	W2	H1	F	Bolt hole			G	Max length of rail L0	C	Co	Mro	Mpo	Myo	Block [kg]	Rail [kg/m]
				d	D	h									
20	12	17.5	60	6	9.5	8.5	20	4000	7.65	13.5	0.12	0.1	0.1	0.19	2.2
23	12.5	21.8	60	7	11	9	20	4000	11.29	21.1	0.19	0.17	0.17	0.32	3.1

❶ C (Basic dynamic load rating), Co (Basic static load rating)

❷ *Q2: The hole of side grease nipple is not made to prevent a foreign substance from going into inside.
When you order the side grease nipple, we build it by ourselves.

Standard and Max. Length of SBG rail

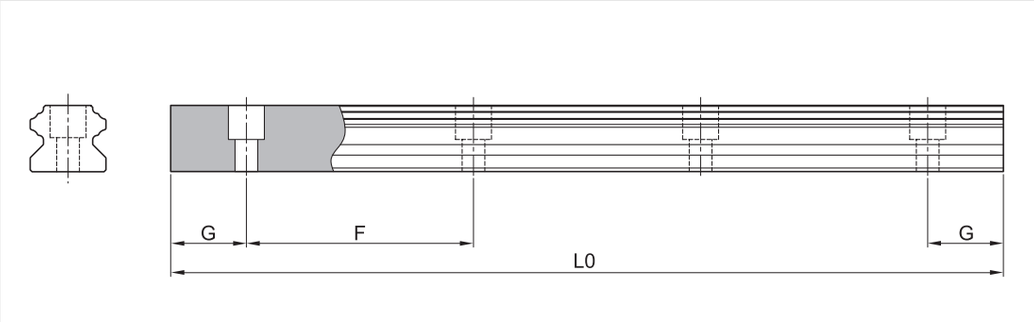

(Unit : mm)

Model number	SBG15	SBG20	SBG25	SBG30	SBG35	SBG45	SBG55	SBG65
Standard length	160	220	220	280	280	570	780	1270
	220	280	280	440	440	885	900	1570
	280	240	340	600	600	1095	1020	2020
	340	460	460	760	760	1200	1140	2470
	460	640	640	1000	1000	1410	1260	2620
	640	820	820	1240	1240	1620	1380	2920
	820	1000	1000	1480	1480	1830	1500	3070
	1000	1240	1240	1640	1640	2040	1620	4000
	1240	1480	1480	1800	1800	2250	1740	
	1480	1600	1600	2040	2040	2460	1860	
	1600	1840	1840	2200	2200	2985	1980	
	1960	2080	2080	2520	2520	3510	2220	
	2200	2200	2200	2840	2840	4000	2580	
	2500	2500	2500	3000	3000		2940	
	2860	2960	2980	3480	3480		3540	
	3000	3520	3520	4000	4000		4000	
		4000	4000					
F	60	60	60	80	80	105	120	150
G	20	20	20	20	20	22.5	30	35
L0(Max length)	3,000	4,000	4,000	4,000	4,000	4,000	4,000	4,000

* The rail for SBG(S), SPG(S) is identical.
* If the maximum length exceeds this size, butt joints can be supplied.
* For more information about butt jointing, please refer to the page of safety design.
* If the G is not standard, please indicate it in the order sheet.

Bottom mounting rail (SBG-B type)

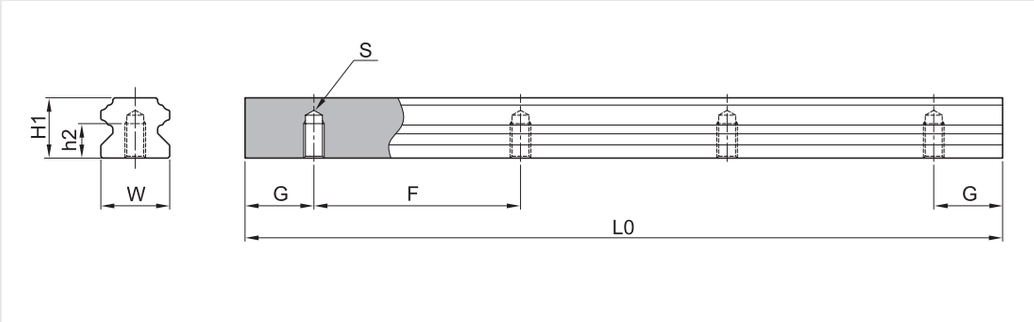

(Unit : mm)

Model number	W1	H1	S	h2	G	F	L0 (Max length)	Weight (kg/m)
SBG 15-B	15	15	M5x0.8	8	20	60	3,000	1.53
SBG 20-B	20	17.5	M6	10	20	60	4,000	2.28
SBG 25-B	23	21.8	M6	12	20	60	4,000	3.21
SBG 30-B	28	25	M8	15	20	80	4,000	4.58
SBG 35-B	34	29	M8	17	20	80	4,000	6.62
SBG 45-B	45	38	M12	24	22.5	105	4,000	11.43

* The rail for SBG(S), SPG(S) is identical
* If the maximum length exceeds this size, please contact SBC.

Return to Table of Contents

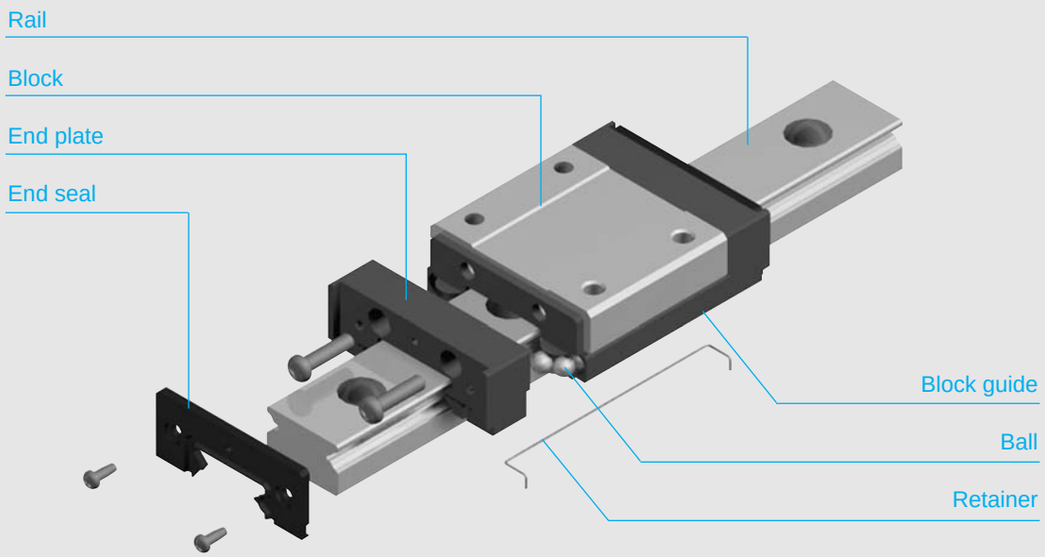

[Feature of structure]

SBC Miniature linear rail system utilizes two rows of ball bearings which make four point contact between the rail and block. This design achieves both a slim profile and high rigidity. The special engineered plastic is used for the end-plate allows for long life ball recirculation.

[Ball retention]

To retain the ball bearings inside the block, a wire retainer is used between the block and rail. With this retainer, the block can be carefully emoved from the rail without loosing ball bearings.

[Low noise]

With a ball return path made from engineered plastic, contact noise between the balls and block wall is removed, therefore achieving low noise.

[Smooth movement]

The steel block, ball returns, and end caps are carefully engineered to act as a single path enabling smooth operation in both horizontal and vertical applications.

[Excellent corrosion resistance]

Both the rail and block are made from stainless steel for excellent corrosion resistance. This is ideal for semiconductor, life science, LCD, or other clean room production environments.

Types and features

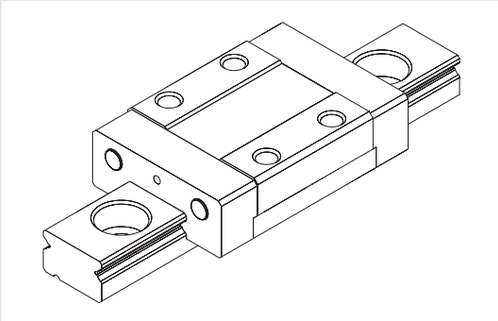

[SBM type]

Standard type of miniature.

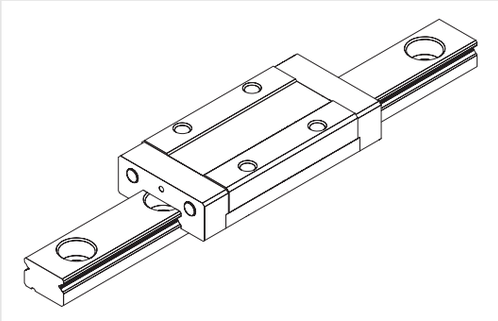

[SBML type]

Block length is modified type to increase load capacity.

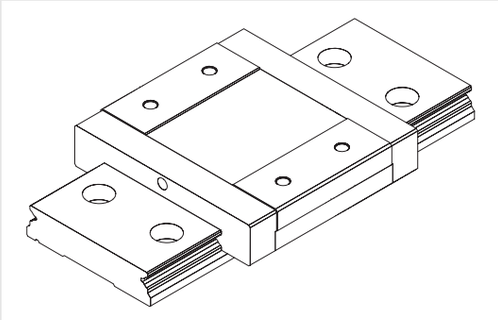

[SBMW type]

The width and length of linear block and rail are modified to increase load ratings and permissible moments.

Ordering example

[Seal resistance]

SBM09 – K1
[1] [2]

[1] Model : SBM, SBML, SBMW

[2] Preload : K1, K2

[Ordering example for rail]

SBM09 – 600L – B
[1] [2] [3]

[1] Model : SBM, SBMW

[2] Rail length

[3] Through tap hole rail : Standard (No symbol)

※ If only rail is ordered, N grade is available.

[Ordering for assembled rail and block]

SBM09 – 2 – K1 – 600 – N – R – B – II
[1] [2] [3] [4] [5] [6] [7] [8]

[1] Model : SBM, SBML, SBMW

[2] Block quantity on rail

[3] Preload : K1, K2

[4] Rail length

[5] Accuracy : N, H, P

[6] Surface treatment

[7] Through tap hole rail : Standard (No symbol)

[8] Rail : Number of rails per axis 1=I, 2=II… 4+IV etc.

※ We recommend block and rail assembled to be ordered where high-precision and high-rigidity are required.

※ For surface treatment, please mark according to each surface treatment symbol.

※ If special G dimension is required, please mark when you place an order.

Standard and Max length

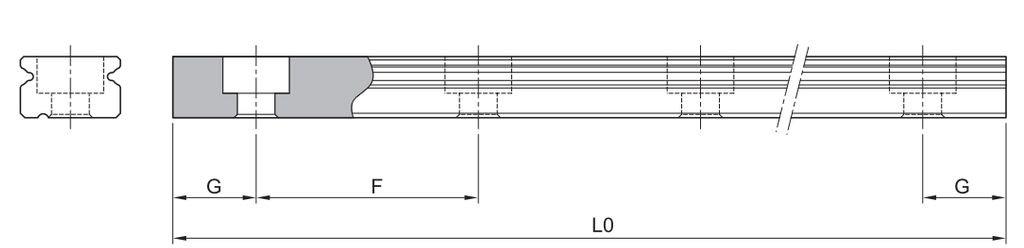

(Unit : mm)

Model number	SBM(L)09	SBM(L)12	SBM(L)15	SBMW09	SBMW12	SBMW15
Standard length	55	70	70	50	70	110
	75	95	110	80	110	150
	95	120	150	110	150	190
	115	145	190	140	190	230
	135	170	230	170	230	270
	155	195	270	200	270	350
	175	220	310	260	350	430
	215	245	350	320	430	510
	255	270	390	380	510	590
	295	320	430	440	590	670
	355	395	470	500	670	750
	415	470	590	560	750	830
	495	545	670	620	830	910
	535	620	830	680	910	990
	615	695	910	740	990	1070
	675	770	990	800	1070	1190
	715	870	1070	860	1190	
	735	970	1190	920		
	795	1020		980		
	875	1195		1040		
	955			1100		
	995			1190		
	1035					
	1115					
	1195					
F	20	25	40	30	40	40
G	7.5	10	15	15	15	15
L0(Max length)	1195	1195	1190	1190	1190	1190

* SBM, SBML use same rail.

* If special G dimension is required, please mark when you place an order.

SBM/SBML

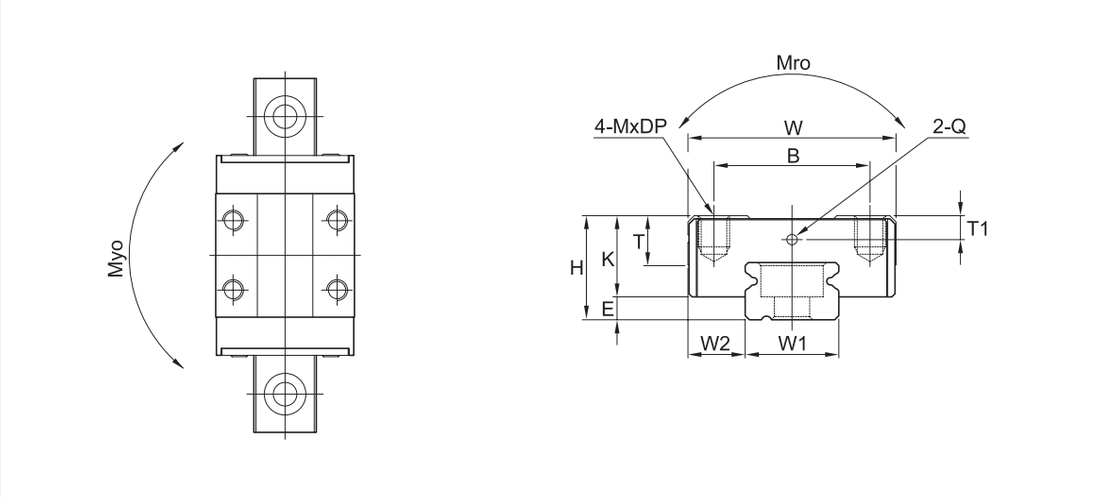

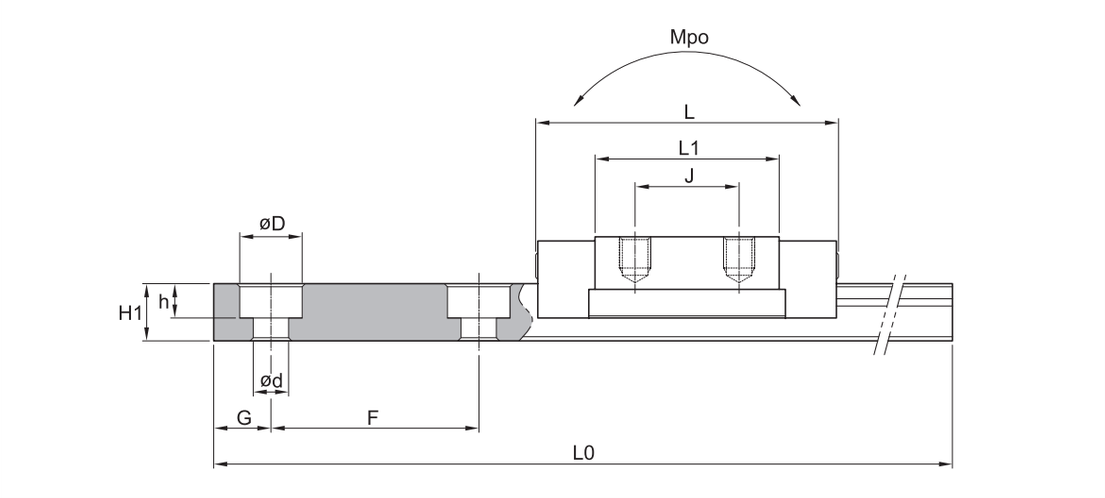

(Unit : mm)

Model	Mounting dimension				Block dimensions									Rail dimension									Basic load rating [kN]		Permissible static moment [N • m]			Mass	
	H	W	L	E	Mounting tap hole				L1	T	K	Greasing hole		W1	W2	H1	F	Bolt hole			G	Max langth of rail L0	C	Co	Mro	Mpo	Myo	Block [kg]	Rail [kg/m]
					B	J	M	DP				T1	Q					d	D	h									
SBM 09	10	20	30.4	2.2	15	10	M3	3	17.8	5	7.8	2.3	Ø1	9	5.5	5.5	20	4	6	3.3	7.5	1195	1.4	2.7	12.15	6.01	6.01	0.013	0.32
SBML 09	10	20	40.8	2.2	15	16	M3	3	28.2	5	7.8	2.3	Ø1	9	5.5	5.5	20	4	6	3.3	7.5	1195	2.1	4.6	20.7	16.22	16.22	0.023	0.32
SBM 12	13	27	35	3	20	15	M3	3.5	19.8	6	10	2.8	Ø1	12	7.5	7.5	25	4	6	4.5	10	1195	3.3	4.9	29.4	12.13	12.13	0.029	0.59
SBML 12	13	27	47.6	3	20	20	M3	3.5	32.6	6	10	2.8	Ø1	12	7.5	7.5	25	4	6	4.5	10	1195	5	9.1	54.6	36.86	36.86	0.043	0.59
SBM 15	16	32	43	4	25	20	M3	4	25.4	7	12	3.1	Ø1	15	8.5	9.5	40	4	6	4.5	15	1190	4.9	7.5	56.25	23.81	23.81	0.052	0.99
SBML 15	16	32	58.8	4	25	25	M3	4	41.2	7	12	3.1	Ø1	15	8.5	9.5	40	4	6	4.5	15	1190	7.1	12.9	96.75	66.44	66.44	0.079	0.99

❶ C (Basic dynamic load rating), Co (Basic static load rating)

SBMW

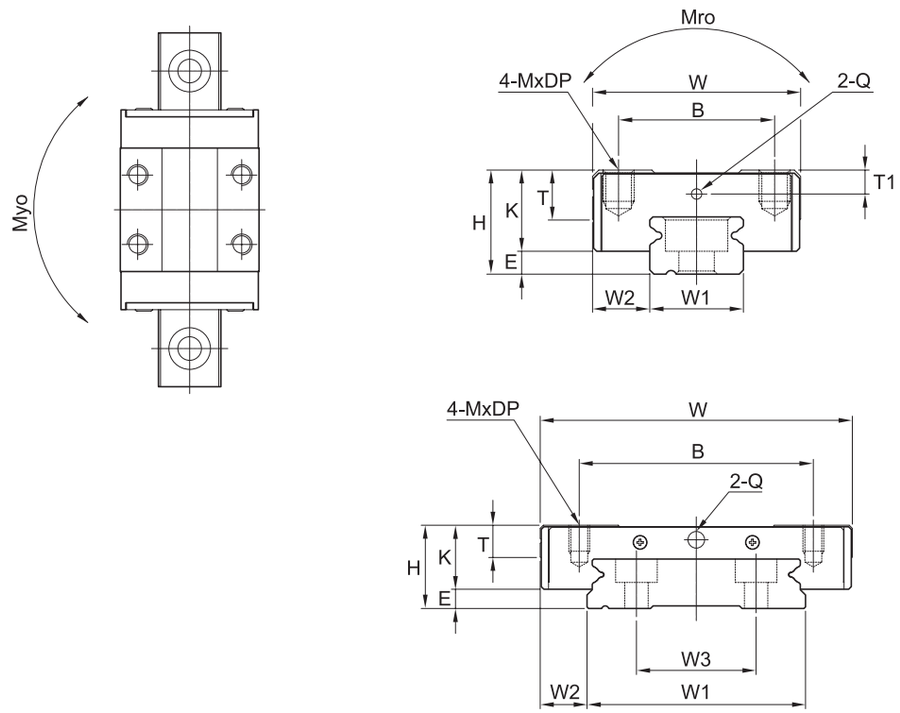

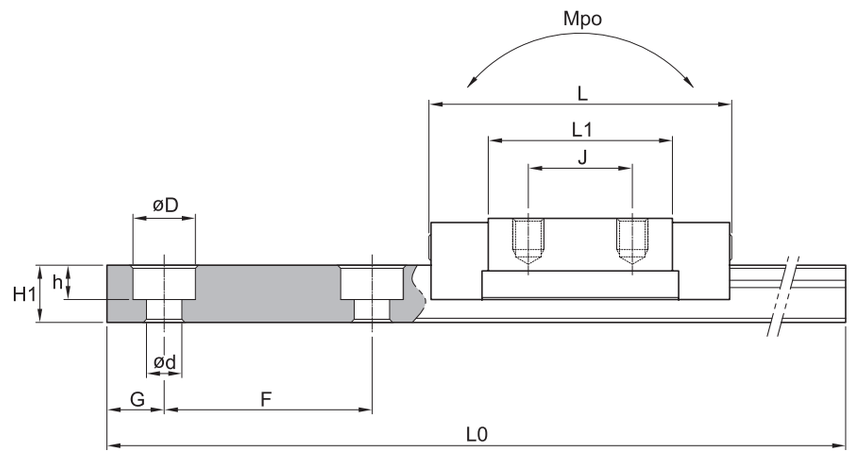

(Unit : mm)

Model	Mounting dimension				Block dimensions								
	H	W	L	E	Mounting tap hole				L1	T	K	Greasing hole	
					B	J	M	DP				T1	Q
SBMW 09	12	30	41	3.7	21	12	M3	3	27	4.5	8.3	2	Ø1.4
SBMW 12	14	40	47.5	4	28	15	M3	3.5	30.9	5	10	2.4	Ø1.6
SBMW 15	16	60	57.5	3.7	45	20	M3	4.5	38.9	6.2	12.3	2.8	Ø3.2

Rail dimension										Basic load rating [kN]		Permissible static moment [N • m]			Mass	
W1	W2	H1	W3	F	Bolt hole			G	Max langth of rail L0						Block [kg]	Rail [kg/m]
					d	D	h			C	Co	Mro	Mpo	Myo		
18	6	7.5	-	30	3.5	6	3.5	10	1190	2.45	3.92	36	16.3	16.3	0.03	0.99
24	8	8.5	-	40	4.5	8	4.5	15	1190	4.02	6.08	47.6	17.2	18.6	0.03	1.42
42	9	9.5	23	40	4.5	8	4.5	15	1190	6.66	9.80	137	35.2	38.2	0.12	2.93

❶ C (Basic dynamic load rating), Co (Basic static load rating)

Accuracy

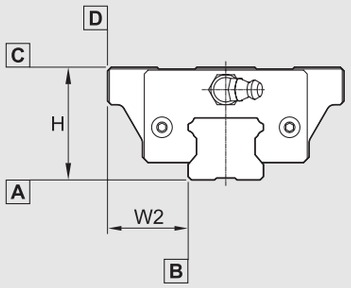

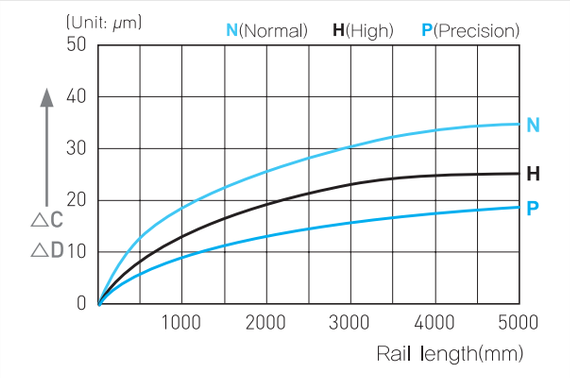

(Unit : mm)

Item	N	H	P
Tolerance for the height **H**	±0.1	±0.04	±0.02
Tolerance for the rail-to-block lateral distance **W2**	±0.1	±0.04	±0.02
Tolerance for the height **H** difference among blocks	0.03	0.015	0.007
Tolerance for rail-to-block lateral distance **W2** distance among blocks	0.03	0.015	0.007
Running parallelism of surface C with surface A	△C		
Running parallelism of surface D with surface B	△D		

- **N** : Normal
- **H** : High
- **P** : Precision

Preload

Reference	Volume of preload
K0 (None)	Clearance within 0.01mm
K1 (Normal)	0.00 ~ 0.02C
K2 (Light)	0.04 ~ 0.06C
K3 (Heavy)	0.08 ~ 0.10C

- C(kN) : Basic dynamic load rating

※ "K3" Preload is not available for SBI15 type

Shoulder height and fillet radius R

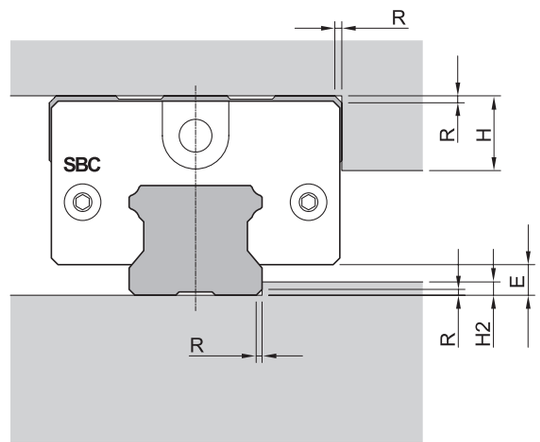

(Unit : mm)

Model number	Fillet radius R	Shoulders height H1	Shoulders height H2	E
15	0.6	7	2.5	3
20	1	8	3.5	4.6
25	1	10	4.5	5.5
30	1	11	5	7
35	1	13	6	7.5
45	1.6	16	8	9
55	1.6	20	10	12
65	1.6	25	15	19

Accuracy

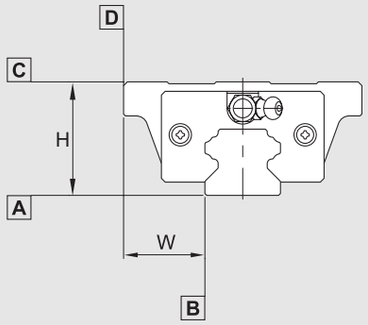

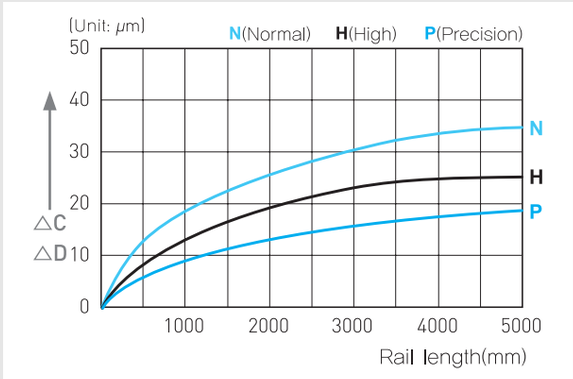

(Unit : mm)

Item	N	H	P
Tolerance for the height **H**	±0.1	±0.04	±0.02
Tolerance for the rail-to-block lateral distance **W2**	±0.1	±0.04	±0.02
Tolerance for the height **H** difference among blocks	0.03	0.015	0.007
Tolerance for rail-to-block lateral distance **W2** distance among blocks	0.03	0.015	0.007
Running parallelism of surface C with surface A	△C		
Running parallelism of surface D with surface B	△D		

- **N** : Normal
- **H** : High
- **P** : Precision

Preload

Reference	Volume of preload
K1 (Normal)	0.00 ~ 0.02C
K2 (Light)	0.04 ~ 0.06C
K3 (Heavy)	0.08 ~ 0.10C

- C(kN) : Basic dynamic load rating

※ "K3" Preload is not available for SBG, SBS 15 type

Shoulder height and fillet radius R

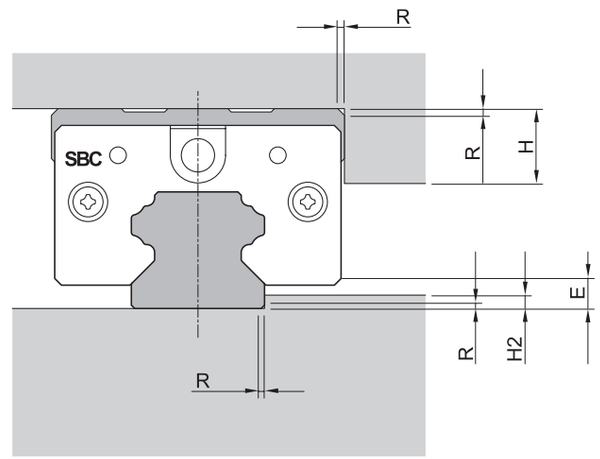

(Unit : mm)

Model number	Fillet radius R	Shoulders height H1	Shoulders height H2	E
15	0.5	4	2	3
20	0.5	5	2.5	3.5
25	1.0	5	3.5	6.5
30	1.0	5	4.5	7
35	1.0	6	6	7.5
45	1.0	8	8	10
55	1.5	8	8	13
65	1.5	10	10	17.5

Accuracy

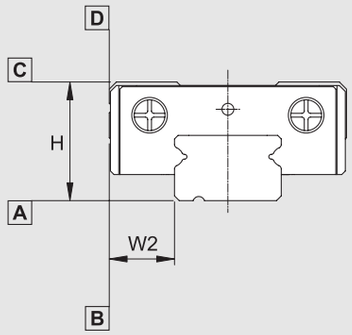

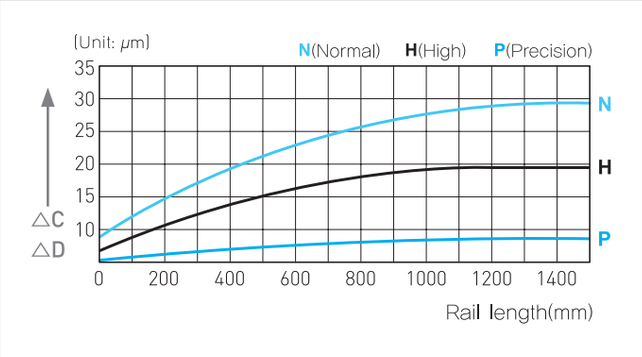

(Unit : mm)

Item	N	H	P
Tolerance for the height **H**	±0.04	±0.02	±0.01
Tolerance for the rail-to-block lateral distance **W2**	±0.04	±0.025	±0.015
Tolerance for the height **H** difference among blocks	0.03	0.015	0.007
Tolerance for rail-to-block lateral distance **W2** distance among blocks	0.03	0.015	0.007
Running parallelism of surface C with surface A	△C		
Running parallelism of surface D with surface B	△D		

- **N** : Normal
- **H** : High
- **P** : Precision

[Preload]

Reference	Volume of preload
K1	0.00 ~ 0.02C
K2	0.04 ~ 0.06C

[Seal resistance]

(Unit : N)

Reference	SBM/SBML	SBMW
09	0.2	0.8
12	0.59	1.1
15	1.18	1.3

[Grease]

SBM(L), SBMW Uses two types of grease according to working conditions.
For details, please see the technical data for grease.

Shoulder height and fillet radius R

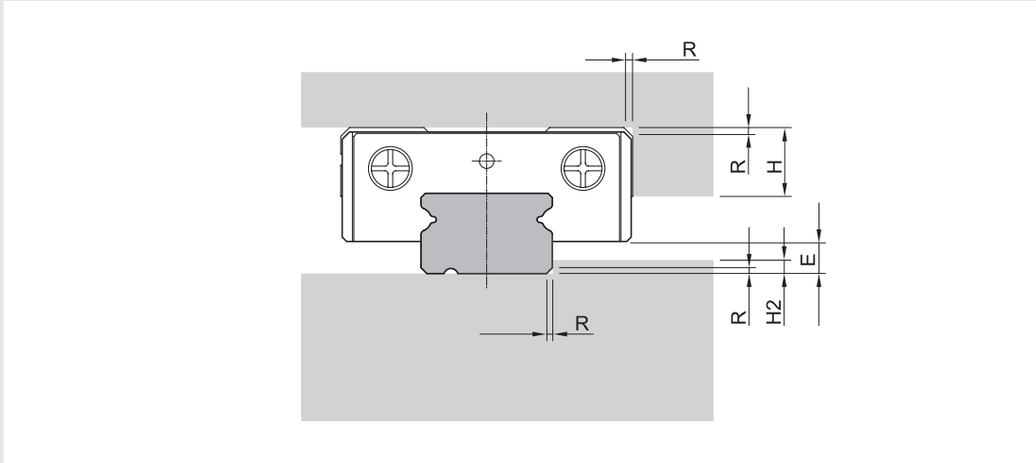

(Unit : mm)

Model number	Fillet radius R	Shoulders height H1	Shoulders height H2	E
SBM(L)09	0.3	3	1.9	2.2
SBM(L)12	0.3	4	2	3
SBM(L)15	0.3	5	2.5	4
SBMW09	0.3	3	3.4	3.7
SBMW12	0.3	4	3.7	4
SBMW15	0.3	5	3.4	3.7

Miniature through tap hole rail

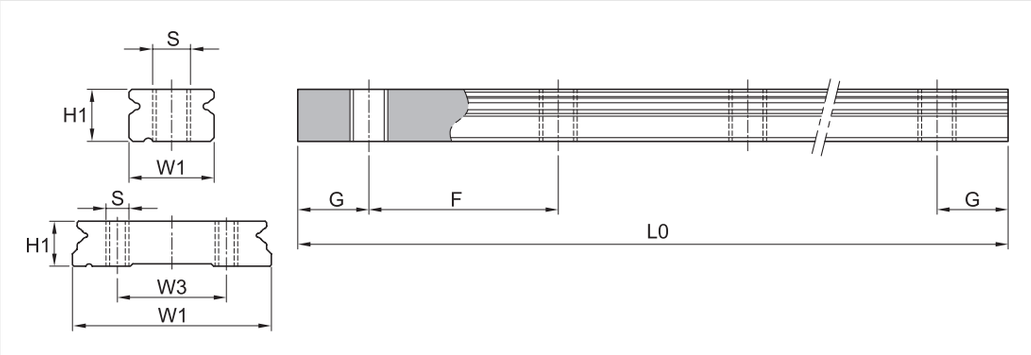

(Unit : mm)

Model	W1	W3	H1	S	G	F	L0 (Max length)	Mass (kg/m)
SBM 09-B	9	-	5.5	M4x0.7	7.5	20	1195	0.32
SBM 12-B	12	-	7.5	M4x0.7	10	25	1195	0.32
SBM 15-B	15	-	9.5	M4x0.7	15	40	1190	0.59
SBMW 09-B	18	-	7.5	M4x0.7	10	30	1190	0.99
SBMW 12-B	24	-	8.5	M5x0.8	15	40	1190	1.42
SBMW 15-B	42	23	9.5	M5x0.8	15	40	1190	2.93

Caution for mounting miniature through tap hole rail

If the mounting bolt is longer than overall mounting height, the bolt can protrude which can cause tinterference with the seal or bearing itself. Therefore, make sure the appropriate bolt selection.

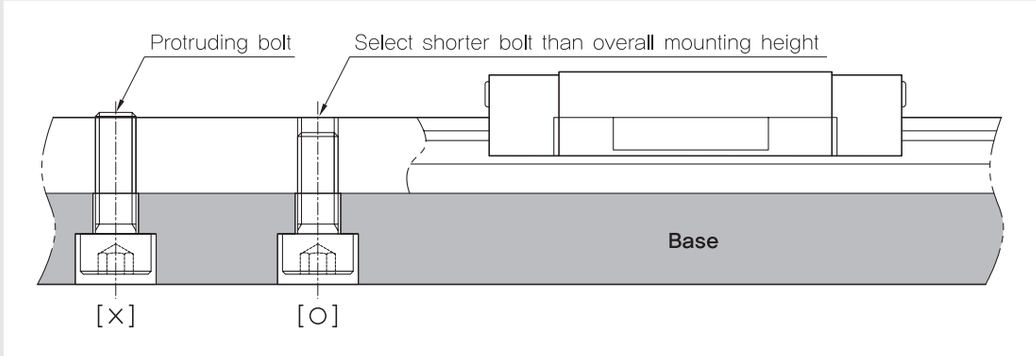

(1) Standard grease fitting (Front grease fitting)

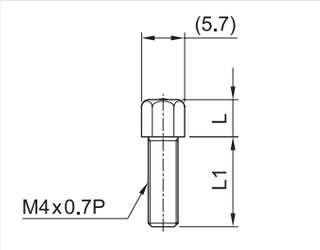

(Unit : mm)

Specification		M4x0.7P		
Applied model	Grease fitting model	Symbol	L	L1
SBI 15	1N	None	7	6
	1D	DD, ZZ	5	9
	1Z	KK	5	11
	1F	D(M)F	5	13

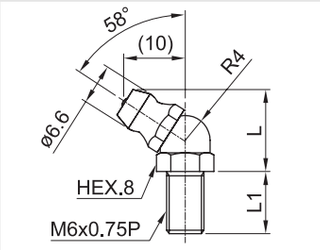

(Unit : mm)

Specification		M6x0.75P, Asia type		
Applied model	Grease fitting model	Symbol	L	L1
SBI 20~35	IA2N	None	14	8
	IA2D	DD, ZZ	14	10
	IA2Z	KK, D(M)F	14	13
	IA2F	D(M)FDD,D(M)FZZ,D(M)FKK	14	18

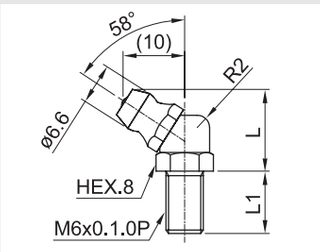

(Unit : mm)

Specification		M6x1.0P, Europe type		
Applied model	Grease fitting model	Symbol	L	L1
SBI 20~35	IE2N	None	14	8
	IE2D	DD, ZZ	14	10
	IE2Z	KK, D(M)F	14	13
	IE2F	D(M)FDD,D(M)FZZ,D(M)FKK	14	18

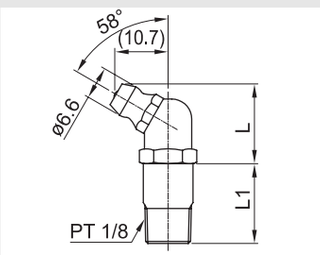

(Unit : mm)

Specification		PT 1/8		
Applied model	Grease fitting model	Symbol	L	L1
SBI 45~65	4N	None	17	13
	4D	DD, KK, ZZ	17	16
	4Z	D(M)F	17	21
	4F	D(M)FDD, D(M)FKK, D(M)FZZ	17	24

(2) Side grease fitting

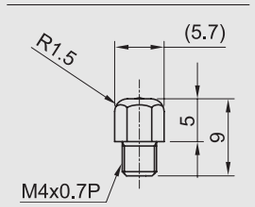

Specification	M4x0.7P
Applied model	SBI 15
Grease fitting model	S1N

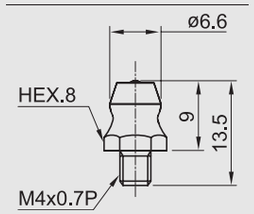

Specification	M4x0.7P
Applied model	SBI 20, 25
Grease fitting model	S2N

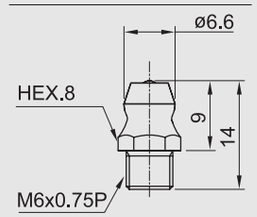

Specification	M6x0.75P
Applied model	SBI 30, 35, 45
Grease fitting model	S3N

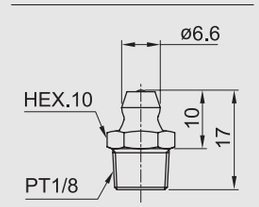

Specification	PT1/8
Applied model	SBI 55, 65
Grease fitting model	S4N

(3) FS nipple connector for side grease fitting (FL. FLL flange type only)

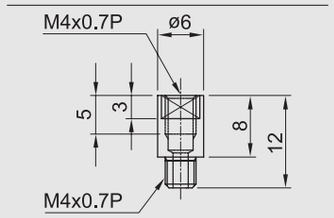

Specification	M4x0.7P
Applied model	SBI 15
Grease fitting model	S1C

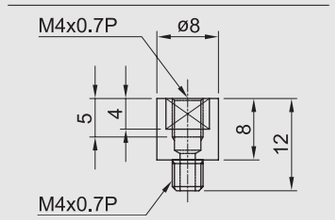

Specification	M4x0.7P
Applied model	SBI 20, 25
Grease fitting model	S2C

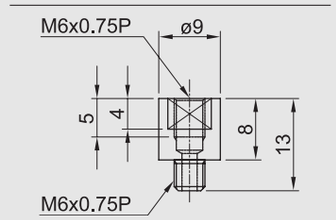

Specification	M6x0.75P
Applied model	SBI 30, 35, 45
Grease fitting model	S4C

* For size 30~45, two pieces of FS nipple connector are applied.

(4) Copper pipe

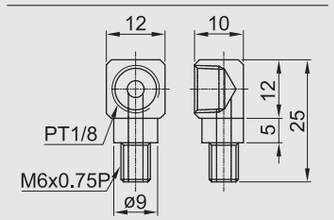

Input size	PT1/8
Output size	M6x0.75P
Applied model	SBI 20
Grease fitting model	S2P

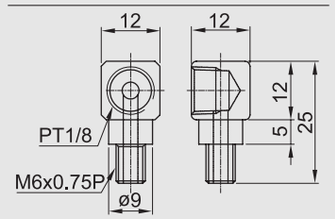

Input size	PT1/8
Output size	M6x0.75P
Applied model	SBI 25, 30, 35
Grease fitting model	S3P

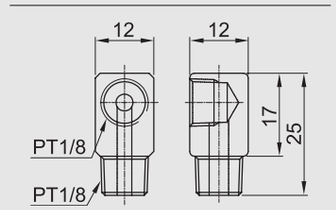

Input size	PT1/8
Output size	PT1/8
Applied model	SBI 45
Grease fitting model	S4P

(1) Standard grease fitting (Front grease fitting)

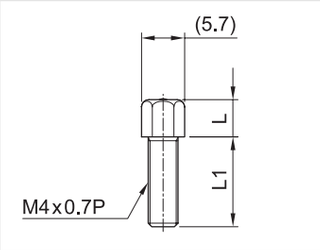

(Unit : mm)

Specification		M4x0.7P		
Applied model	Grease fitting model	Symbol	L	L1
SBG(S) 15	1N	None	7	6
	1D	DD, ZZ	5	9
	1Z	KK	5	11
	1F	MF	5	13

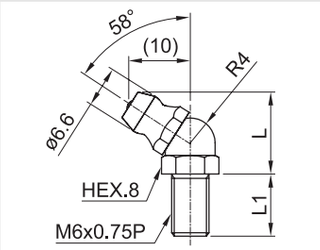

(Unit : mm)

Specification		M6x0.75P, Asia type		
Applied model	Grease fitting model	Symbol	L	L1
SBG(S) 20~35	IA2N	None	14	8
	IA2D	DD, ZZ	14	10
SPG(S) 20~35	IA2Z	KK, MF	14	13
	IA2F	MFDD, MFZZ, MFKK	14	18

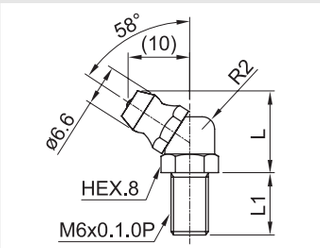

(Unit : mm)

Specification		M6x1.0P, Europe type		
Applied model	Grease fitting model	Symbol	L	L1
SBG(S) 20~35	IE2N	None	14	8
	IE2D	DD, ZZ	14	10
SPG(S) 20~35	IE2Z	KK, MF	14	13
	IE2F	MFDD, MFZZ, MFKK	14	18

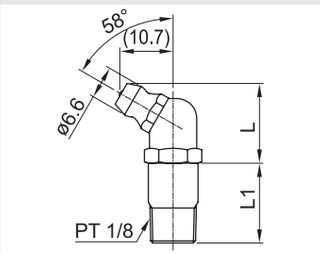

(Unit : mm)

Specification		PT 1/8		
Applied model	Grease fitting model	Symbol	L	L1
SBG(S) 45~65	4N	None	17	13
	4D	DD, KK, ZZ	17	16
	4Z	MF	17	21
	4F	MFDD, MFKK, MFZZ	17	24

(2) Side grease fitting

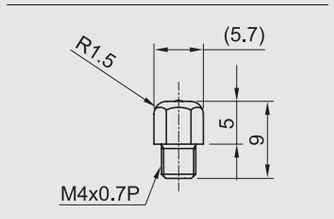

Specification	M4x0.7P
Applied model	SBG(S) 15
Grease fitting model	S1N

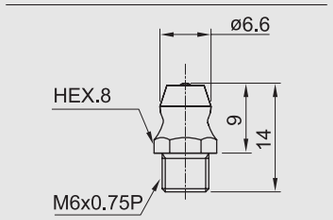

Specification	M6x0.75P
Applied model	SBG(S) 20~45
Grease fitting model	S3N

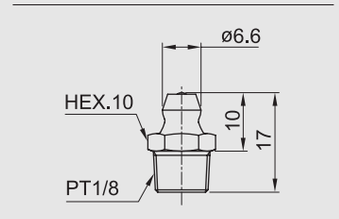

Specification	PT1/8
Applied model	SBG 55~65
Grease fitting model	S4N

(3) FS nipple connector for side grease fitting (FL. FLL flange type only)

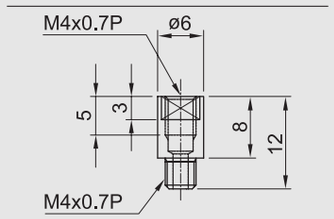

Specification	M4x0.7P
Applied model	SBG(S) 15
Grease fitting model	S1C

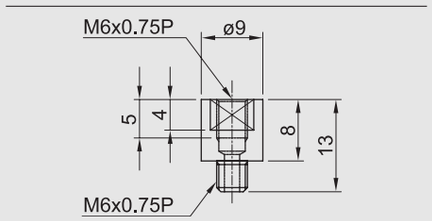

Specification	M6x0.75P
Applied model	SBG(S) 20, 25, 30, 35, 45
Grease fitting model	S4C

* For size 30~45, two pieces of FS nipple connector are applied.

(4) Copper pipe

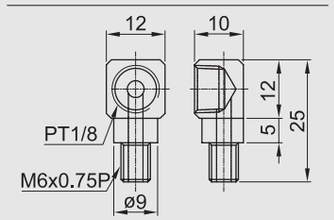

Input size	PT1/8
Output size	M6x0.75P
Applied model	SBG(S),SPG(S)20
Grease fitting model	S2P

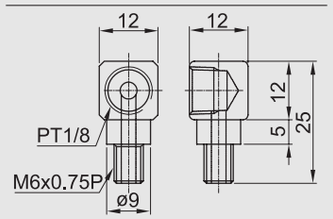

Input size	PT1/8
Output size	M6x0.75P
Applied model	SBG(S),SPG(S)25~35
Grease fitting model	S3P

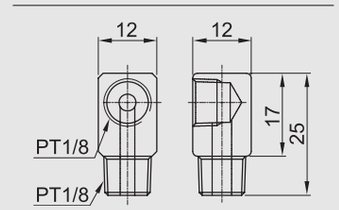

Input size	PT1/8
Output size	PT1/8
Applied model	SBG(S) 45~65
Grease fitting model	S4P

RC Cap

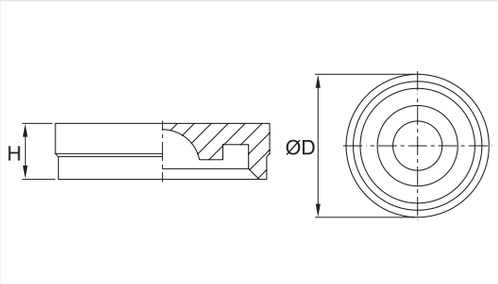

(Unit : mm)

Model	D±0.1	H±0.1
RC 15	7.6	1.3
RC 20	9.6	3.5
RC 25	11.1	2.8
*RC 30	14.2	3.7
RC 45	20.2	4.7
RC 55	23.2	6
RC 65	26.2	6

- RC 30 is used for SBI 30, 35 rail.
- SBI, SBG type use same RC cap.

ST Tape

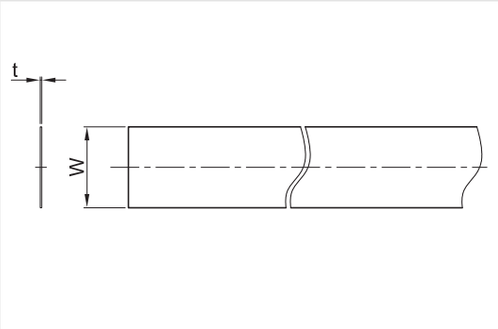

(Unit : mm)

Model	W	t
ST 15A	11	0.1
ST 20A	15	0.1
ST 25A	17	0.1
ST 30A	21	0.1
ST 35A	27	0.1
ST 45A	37	0.1
ST 55A	43	0.1
ST 65A	51	0.1

Ordering example : **ST15A - 1000L**
❶ ❷

❶ Model number
❷ Length

Seal and MF container

[Method and overall length with each seal]

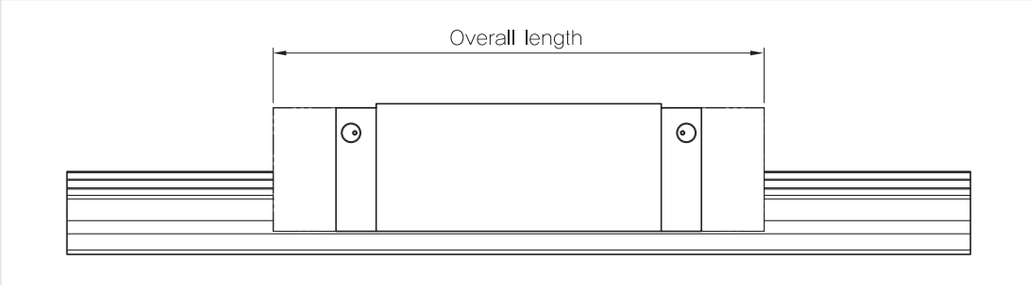

- E : End seal S : Scraper F : DF (High dust protection seal). MF (Self lubricant)

(Unit : mm)

Additional seal		Standard	DD	ZZ	KK	D(M)F	D(M)FDD	D(M)FZZ	D(M)FKK
Indication of seal		E	E+E	E+S	E+E+S	F+E	F+E+E	F+E+S	F+E+E+S
Overall length with seal	15V	39.9	44.5	45.3	49.9	53.9	58.5	59.3	63.9
	15	63.8	68.4	69.2	73.8	77.8	82.4	83.2	87.8
	15L	79.4	84	84.8	89.4	93.4	98	98.8	103.4
	20V	49.1	54.1	54.5	59.5	63.1	68.1	68.5	73.5
	20	78.8	83.8	84.2	89.2	92.8	97.8	98.2	103.2
	20L	96.4	101.4	101.8	106.8	110.4	115.4	115.8	120.8
	25V	52.6	57.6	58	63	66.6	71.6	72	77
	25	92	97	97.4	102.4	106	111	111.4	116.4
	25L	108	113	113.4	118.4	122	127	127.4	132.4
	30	107.6	113.6	114	120	123.6	129.6	130	136
	30L	131.6	137.6	138	144	147.6	153.6	154	160
	35	124.6	130.6	131	137	140.6	146.6	147	153
	35L	152.6	158.6	159	165	168.6	174.6	175	181
	45	142	148	148.4	154.4	158	164	164.4	170.4
	45L	174	180	180.4	186.4	190	196	196.4	202.4
	55	172.4	179.4	179.2	186.2	190.4	197.4	197.2	204.2
	55L	211.8	218.8	218.6	225.6	229.8	236.8	236.6	243.6
	65	219.8	226.8	226.6	233.6	237.8	244.8	244.6	251.6
	65L	272.2	279.2	279	286	290.2	297.2	297	304

- Bottom seal of SBI type is integrated with bottom retainer. (Except SBI15)
- If block is assembled with MF container, the grease fitting is not supplied. If you would like to feed the grease to the block, please order side grease fitting type.

RC Cap

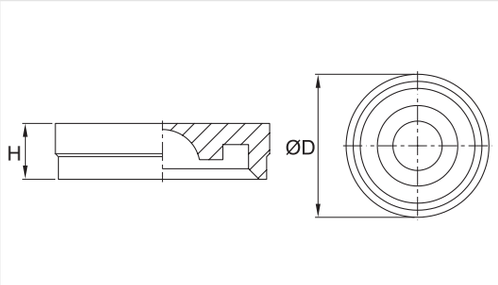

(Unit : mm)

Model	D±0.1	H±0.1
RC 15	7.6	1.3
RC 20	9.6	3.5
RC 25	11.1	2.8
*RC 30	14.2	3.7
RC 45	20.2	4.7
RC 55	23.2	6
RC 65	26.2	6

- RC 30 is used for SBG 30, 35 rail.
- SBI, SBG type use same RC cap.

ST Tape

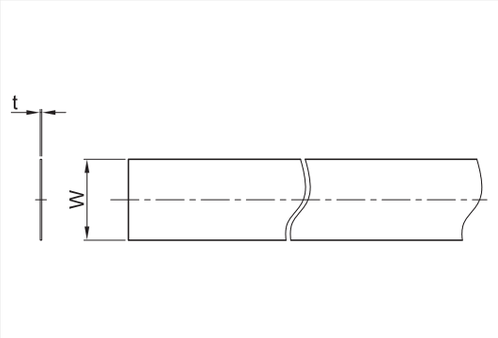

(Unit : mm)

Model	W	t
ST 15	8.3	0.1
ST 20	11	0.1
ST 25	13	0.1
ST 30	17	0.1
ST 35	21	0.1
ST 45	30	0.1
ST 55	34	0.1
ST 65	40	0.1

Ordering example : **ST15 - 1000L**
❶ ❷

❶ Model number
❷ Length

- Equivalent rail is used for SBG, SBS, SPG, SPS

Seal and MF container

[Method and overall length with each seal]

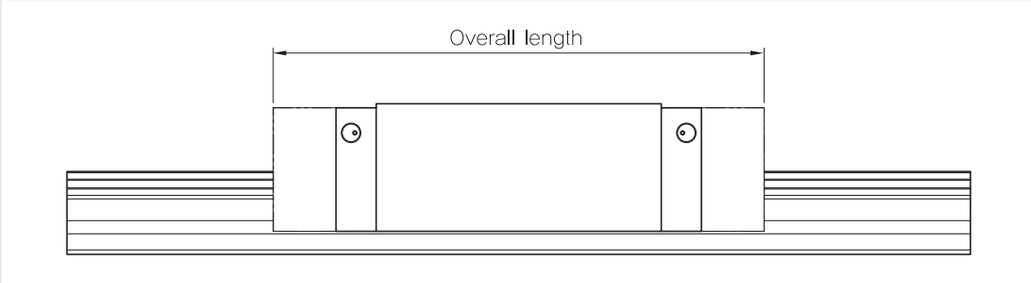

- E : End seal S : Scraper F : MF (Self lubricant)

(Unit : mm)

Additional seal		Standard	DD	ZZ	KK	MF	MFDD	MFZZ	MFKK
Indication of seal		E	E+E	E+S	E+E+S	F+E	F+E+E	F+E+S	F+E+E+S
Overall length with seal	15	60.8	66.8	65.2	71.2	-	-	-	-
	15V	44.9	50.9	49.3	55.3	-	-	-	-
	20	77.2	83.6	82.6	89	93.2	99.6	98.6	105
	20L	93.2	99.6	98.6	105	109.2	115.6	114.6	121
	20V	54.2	60.6	59.6	66	70.2	76.6	75.6	82
	25	86.9	93.3	92.7	99.1	102.9	109.3	108.7	115.1
	25L	106.4	112.8	112.2	118.6	122.4	128.8	128.2	134.6
	25V	62.6	69	68.4	74.8	78.6	85	84.4	90.8
	30	100	104.6	105.4	110	116	120.6	121.4	126
	30L	122.5	127.1	127.9	132.5	138.5	143.1	143.9	148.5
	35	112.6	117.2	117.4	122	128.6	133.2	133.4	138
	35L	138.1	142.7	142.9	147.5	154.1	158.7	158.9	163.5
	45	140.3	145.1	145.2	150	156.3	161.1	161.2	166
	45L	172.3	177.1	177.2	182	188.3	193.1	193.2	198
	55	166.8	172.8	170.4	176.4	-	-	-	-
	55L	204.8	210.8	208.4	214.4	-	-	-	-
	65	195.2	201.2	202.4	208.4	-	-	-	-
	65L	255.2	261.2	262.4	268.4	-	-	-	-

- Bottom seal of SBG(S) type is integrated with bottom retainer. (Except SBG, SBS15)
- If block is assembled with MF container, the grease fitting is not supplied. If you would like to feed the grease to the block, please order side grease fitting type.

Return to Table of Contents

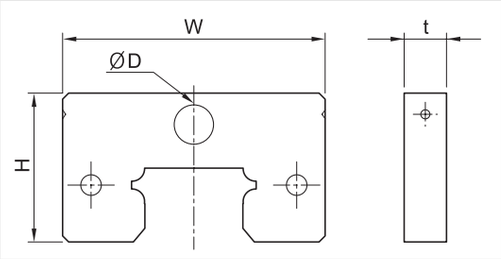

[Dimension of MF container]

(Unit : mm)

Reference	Model	Applied model	Block type	W	t	H	D
DF / MF	15A	SBI15	FL/FLL/HL/HLL SL/SLL/FV/SV	33.4	7	20.2	4
	20A	SBI20	FL/FLL SL/SLL	43.4	7	24.6	6.5
	20B		CL/CLL/FV/SV			22.6	
	25A	SBI25	FL/FLL/HL/HLL SL/SLL	47	7	29.7	6.5
	25B		CL/CLL/FV/SV			26.7	
	30A	SBI30	FL/FLL/HL/HLL SL/SLL	59	8	34.2	6.5
	35A	SBI35	FL/FLL/HL/HLL SL/SLL	69	8	39.7	6.5
	45A	SBI45	FL/FLL/HL/HLL SL/SLL	85	8	49.7	10.5
	55A	SBI55	FL/FLL/HL/HLL SL/SLL	98	9	56	10.5
	65A	SBI65	FL/FLL SL/SLL	123	9	69	10.5

[Seal resistance]

For the maximum value of seal resistance of SBI standard type per block, in which grease is not applied.

※ Scraper has no resistance because it is not contacting rail.

(Unit : N)

Model	End seal	DF	MF
SBI 15	2.0	4.7	3.5
SBI 20	2.5	4.9	3.0
SBI 25	3.0	5.5	3.5
SBI 30	3.9	5.6	3.5
SBI 35	2.5	5.7	3.7
SBI 45	3.4	5.9	4.1
SBI 55	3.5	6.2	4.2
SBI 65	3.6	6.4	4.4

HT high temperature end plate

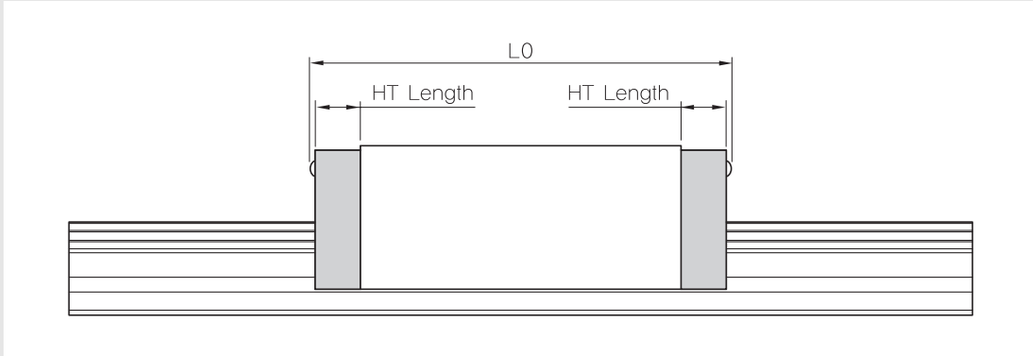

(Unit : mm)

Reference	HT Length	Overall length					
		Applied model	L0	Applied model	L0	Applied model	L0
HT 15A	6.5	SBI 15V	38.3	SBI 15	62.2	SBI 15L	77.8
HT 20A	8	SBI 20V	47.1	SBI 20	76.8	SBI 20L	94.4
HT 25A	8	SBI 25V	50.6	SBI 25	90	SBI 25L	106
HT 30A	10	-	-	SBI 30	105.6	SBI 30L	129.6
HT 35A	11	-	-	SBI 35	122.6	SBI 35L	150.6
HT 45A	13	-	-	SBI 45	140	SBI 45L	172
HT 55A	16	-	-	SBI 55	168.5	SBI 55L	207.9
HT 65A	20	-	-	SBI 65	215.9	SBI 65L	268.3

Ordering example : **SBI25FL - HT - 2 - K1 - 800 - N**
❶ ❷ ❸ ❹ ❺ ❻

❶ Model
❷ High temperature end plate
❸ Block quantity
❹ Preload
❺ Rail length
❻ Accuracy

※ All plastic components are replace with steel or aluminum in the High Temperature Blocks.

※ Side grease fitting is not available for high temperature end plates

Grease and nipple specification

[Grease]

SBI uses two types of grease according to working conditions.
For details, please see the technical data for grease.

Return to Table of Contents

[Dimension of MF container]

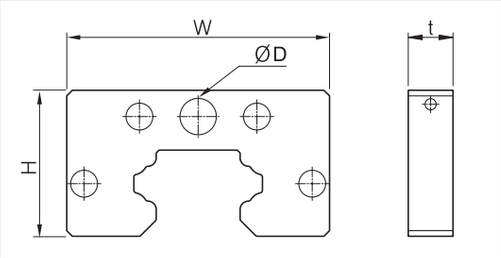

(Unit : mm)

Reference	Model	W	t	H	D
MF	20	43	8	24	6.5
	25	47	8	26.1	6.5
	30	59	8	34.5	6.5
	35	68	8	40	6.5
	45	84	8	49	8.5

※ Container is available for SBG(S), SPG(S) 20~45

[Seal resistance]

For the maximum value of seal resistance of SBG standard type per block, in which grease is not applied.

※ Scraper has no resistance because it is not contacting rail.

(Unit : N)

Model	End seal	MF
SBG 15	1.96	-
SBG 20	2.58	1.61
SBG 25	3.92	4.21
SBG 30	7.84	6.37
SBG 35	11.76	7.06
SBG 45	19.6	7.35
SBG 55	19.6	-
SBG 65	34.3	-

HT high temperature end plate

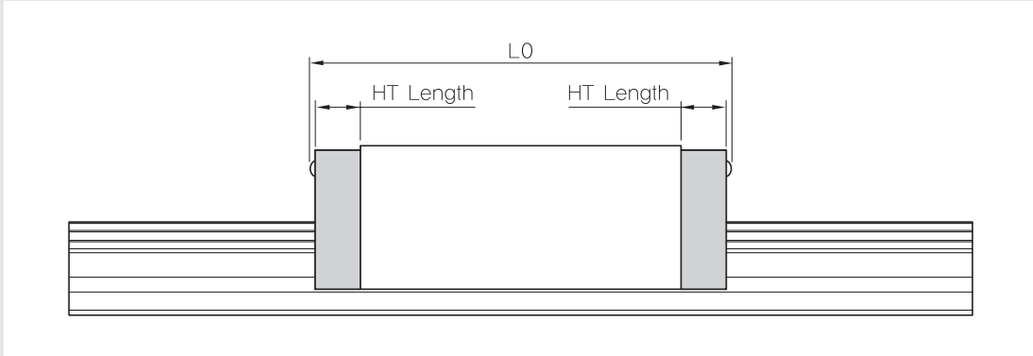

(Unit : mm)

Reference	HT Length	Overall length					
		Applied model	L0	Applied model	L0	Applied model	L0
HT 15	8	SBG(S) 15	54.8	-	-	SBS 15V	38.9
HT 20	10	SBG(S) 20	70.8	SBG(S) 20L	86.8	SBS 20V	47.8
HT 25	10.5	SBG(S) 25	83.9	SBG(S) 25L	103.4	SBS 25V	59.6
HT 30	11.5	SBG(S) 30	98.4	SBG(S) 30L	120.9	-	-
HT 35	12	SBG(S) 35	110.4	SBG(S) 35L	135.9	-	-
HT 45	16	SBG(S) 45	138	SBG(S) 45L	170	-	-
HT 55	18	SBG(S) 55	162	SBG(S) 55L	200	-	-
HT 65	18	SBG(S) 65	194	SBG(S) 65L	254	-	-

Ordering example : **SBG25FL** - **HT** - **2** - **K1** - **800** - **N**
❶ ❷ ❸ ❹ ❺ ❻

❶ Model
❷ High temperature end plate
❸ Block quantity
❹ Preload
❺ Rail length
❻ Accuracy

※ All plastic components are replace with steel or aluminum in the High Temperature Blocks.

※ Side grease fitting is not available for high temperature end plates

Grease and nipple specification

[Grease]

SBG uses two types of grease according to working conditions.
For details, please see the technical data for grease.

Return to Table of Contents

SBMNS-TYPE (MINIATURE)

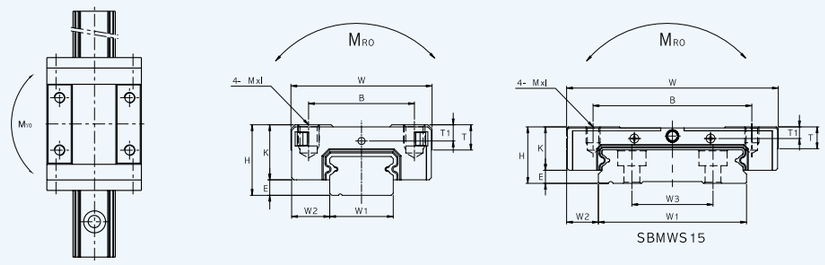

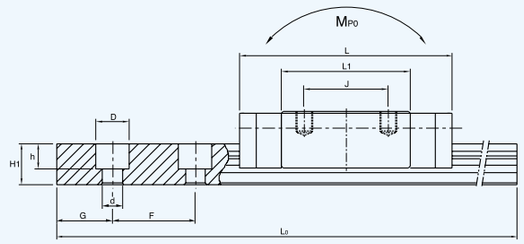

Dimension:mm

Reference	Mounting Dimension						Block Dimensions						
	Height H	E	W2	W3	Width W	Length L	Mounting tap hole B x J	Mounting tap hole M	L_1	T	K	T1	Nipple Mounting hole
SBMNS09	10	2.2	5.5	–	20	29	15×10	M3×3	18	3.5	7.8	2.3	Ø1
SBMNS12	13	3	7.5	–	27	37.6	20×15	M3×3.5	23	5	10	2.7	Ø1
SBMNS15	16	4	8.5	–	32	45.5	25×20	M3×4	29	6	12	3.1	Ø2.7
SBMWS09	12	3.7	6	–	30	42.3	21×12	M3×3	27	4.5	7.8	2	Ø1
SBMWS12	14	4	8	–	40	48.4	28×15	M3×3.5	30.9	5	10	2.4	Ø1
SBMWS15	16	3.7	9	23	60	57.5	45×20	M4×4.5	38.9	6	12	2.6	Ø2.7

Dimension:mm

Rail Size							Load capacity					Weight	
Width W1	Height H1	Pitch F	Bolt Hole d x D x h	G	Max. length of rail (L_{0MAX}) Carbon	Max. length of rail (L_{0MAX}) Stainless	Dynamic C(N)	Stationary C_0(N)	Stationary Moment(kgf·m) M_{R0}	M_{P0}	M_{Y0}	Bearing (kg)	Rail (kg/m)
9	5.5	20	3.5×6×3.3	7.5	1,400	610	1,420	2,900	1.06	0.52	0.52	0.018	0.32
12	7.5	25	3.5×6×4.5	10	1,400	610	2,450	3,626	1.5	0.82	0.89	0.031	0.6
15	9.5	40	3.5×6×4.5	15	1,400	610	4,018	5,978	3.80	1.68	1.83	0.063	0.01
18	7.5	30	3.5×6×4.5	10	1,500	610	2,450	3,920	3.67	1.66	1.66	0.03	0.99
24	8.5	40	4.8×8×4.5	15	1,500	610	4,020	6,080	4.86	1.75	1.9	0.055	1.42
42	9.5	40	4.8×8×4.5	15	1,500	610	6,660	9,800	13.97	3.6	3.9	0.124	2.93

1KN= 102kgf

Low Profile Linear Ball Bearings and - Metric

Low Profile Linear Ball Bearings provide you with the following:

A Coefficient of friction as low as 0.001.

The lowest profile for tight spaces.

Integral seals to keep the length of the bearing at a minimum.

A cost effective design that provides you with the most bearing for your money.

Technical Specifications

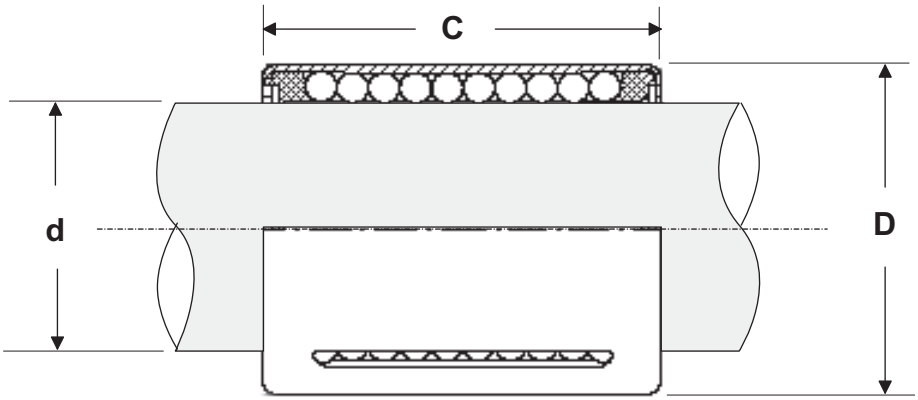

Dimensions in (mm)									
Part Number		Shaft Dia. **d (h6)**	Outside Dia. **D** (h5)	Length **C** (h12)	Bearing Mass (kg)	Minimum-Dynamic Load Capacity C (N)[1]	Minimum Static Load Capacity C_O(N)[1]	Maximum Dynamic Load Capacity C (N)[1]	Maximum Static Load Capacity C_O(N)[1]
Without Wipers	With Wipers								
KH0824	KH0824PP	8	15	24	0.01	410	280	475	400
KH1228	KH1228PP	12	19	28	0.02	670	510	800	740
KH1630	KH1630PP	16	24	30	0.03	890	620	1060	910
KH2030	KH2030PP	20	28	30	0.03	1110	790	1170	1010
KH2540	KH2540PP	25	35	40	0.07	2280	1670	2420	2130
KH3050	KH3050PP	30	40	50	0.10	3300	2700	3300	3100

1. Load ratings are based upon 100km of travel and a shaft hardness of HRC60 or more. The actual load rating is dependant upon the direction of the applied load relative to the bearing's ball track locations, where the maximum load capacity occurs between ball tracks.

Cross Roller Guide Ways and Tables

Cross Roller Guide Ways and Tables provide you with the following:

Extremely smooth motion for applications that require little velocity ripple.

Very high rigidity for applications that require highly accurate positioning under varying loads.

Pre-assembled tables that are pre-aligned for out of the box installation.

Corrosian resistant versions for applications that are subject to harsh environments.

Cross Roller Bearing

WRG	2	-	150	H	-	26Z
WRG -Std WRGA -St.St'l	Roller Size		Length of Rail(mm)	Accuaracy Blank -Normal H -High P -Precision		# of rollers

Dimensions in mm									
Part Nuber	Maximum Stroke	D	No. of Roller (Z)	L	A	B	C	M x P	N
WRG 1020	12	1.5	5	20	8.5	4	3.8	1 x 10	5
WRG 1030	22		7	30				2 x 10	
WRG 1040	27		10	40				3 x 10	
WRG 1050	32		13	50				4 x 10	
WRG 1060	37		16	60				5 x 10	
WRG 1070	42		19	70				6 x 10	
WRG 1080	52		21	80				7 x 10	
WRG 2030	18	2	5	30	12	6	5.5	1 x 15	7.5
WRG 2045	24		8	45				2 x 15	
WRG 2060	30		11	60				3 x 15	
WRG 2075	44		13	75				4 x 15	
WRG 2090	50		16	90				5 x 15	
WRG 2105	64		18	105				6 x 15	
WRG 2120	70		21	120				7 x 15	
WRG 2135	84		23	135				8 x 15	
WRG 2150	90		26	150				9 x 15	
WRG 2165	96		29	165				10 x 15	
WRG 2180	102		32	180				11 x 15	
WRG3050	28	3	7	50	18	8	8.3	1 x 25	12.5
WRG3075	48		10	75				2 x 25	
WRG3100	58		14	100				3 x 25	
WRG3125	78		17	125				4 x 25	
WRG3150	88		21	150				5 x 25	
WRG3175	108		24	175				6 x 25	
WRG3200	118		28	200				7 x 25	
WRG3225	138		31	225				8 x 25	
WRG3250	148		35	250				9 x 25	
WRG3275	168		38	275				10 x 25	
WRG3300	178		42	300				11 x 25	
WRG3325	198		45	325				12 x 25	
WRG3350	208		49	350				13 x 25	

DIAMOND CASE

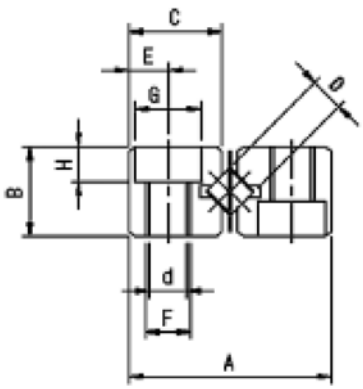

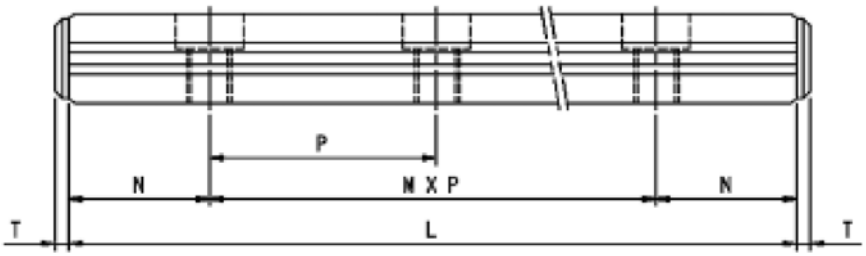

Dimensions in mm									
E	F	d	G	H	T	Basic Load Ratings		Mass kg/m (rail/ea.)	Part Nuber
						Dyn C (N)	Stat. C (N)		
1.8	M2	1.65	3	1.4	1.5	333	303	0.11	WRG 1020
						450	460		WRG 1030
						666	764		WRG 1040
						764	921		WRG 1050
						940	1225		WRG 1060
						1029	1372		WRG 1070
						1117	1528		WRG 1080
2.5	M3	2.55	4.4	2	2	578	578	0.23	WRG 2030
						980	1156		WRG 2045
						1156	1440		WRG 2060
						1323	1724		WRG 2075
						1646	2303		WRG 2090
						1803	2597		WRG 2105
						1950	2920		WRG 2120
						2087	3165		WRG 2135
						2371	3743		WRG 2150
						2508	4037		WRG 2165
						2773	4606		WRG 2180
3.5	M4	3.30	6	3.1	2.5	1764	2077	0.45	WRG 3050
						2508	3459		WRG 3075
						3332	4841		WRG 3100
						3684	5537		WRG 3125
						4351	6918		WRG 3150
						4998	8300		WRG 3175
						5605	9682		WRG 3200
						5899	10290		WRG 3225
						6487	11760		WRG 3250
						7046	13132		WRG 3275
						7595	14504		WRG 3300
						7869	15190		WRG 3325
						8398	16562		WRG 3350

DIAMOND CASE

Cross Roller Bearing

WRG	2	-	150	H	-	26Z
WRG - Std WRGA - St.Stl	Roller Size		Length of Rail (mm)	Accuaracy Blank - Normal H - High P - Precision		# of rollers

Dimensions in mm									
Part Nuber	Maximum Stroke	D	No. of Roller (Z)	L	A	B	C	M x P	N
WRG 4160	106	4	15	160	22	11	10.2	3 x 40	20
WRG 4200	130		19	200				4 x 40	
WRG 4240	154		23	240				5 x 40	
WRG 4280	178		27	280				6 x 40	
WRG 4320	202		31	320				7 x 40	
WRG 4360	226		35	360				8 x 40	
WRG 4400	250		39	400				9 x 40	
WRG 6100	56	6	7	100	31	15	14.2	1 x 50	25
WRG 6150	96		10	150				2 x 50	
WRG 6200	136		13	200				3 x 50	
WRG 6250	156		17	250				4 x 50	
WRG 6300	196		20	300				5 x 50	
WRG 6350	216		24	350				6 x 50	
WRG 6400	256		27	400				7 x 50	
WRG 6450	276		31	450				8 x 50	
WRG 6500	316		34	500				9 x 50	
WRG 6600	376		41	600				11 x 50	
WRG 9200	118	9	10	200	44	22	20.2	1 x 100	50
WRG 9300	178		15	300				2 x 100	
WRG 9400	238		20	400				3 x 100	
WRG 9500	298		25	500				4 x 100	
WRG 9600	358		30	600				5 x 100	
WRG 9700	418		35	700				6 x 100	
WRG 9800	478		40	800				7 x 100	
WRG 9900	538		45	900				8 x 100	
WRG 91000	598		50	1000				9 x 100	

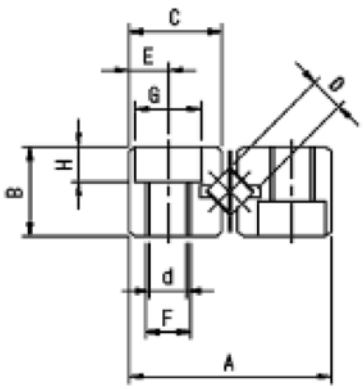

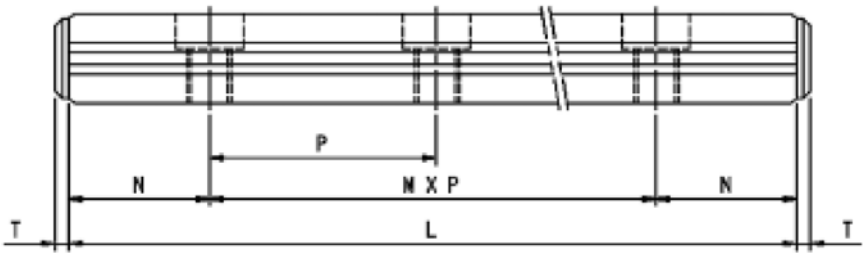

Dimensions in mm									
E	F	d	G	H	T	Basic Load Ratings		Mass kg/m (rail/ea.)	Part Nuber
						Dyn C (N)	Stat. C (N)		
4.5	M5	4.3	8	4.2	2.5	6586	9996	0.8	WRG 4160
						7958	12838		WRG 4200
						8232	15680		WRG 4240
						10486	18522		WRG 4280
						11662	21364		WRG 4320
						12838	24206		WRG 4360
						13916	27048		WRG 4400
6	M6	5.2	9.5	5.2	3	8693	10878	1.5	WRG 6100
						12760	18130		WRG 6150
						14622	21756		WRG 6200
						18150	29008		WRG 6250
						21452	36260		WRG 6300
						24598	43512		WRG 6350
						26117	47138		WRG 6400
						29086	54390		WRG 6450
						31850	61642		WRG 6500
						35104	72520		WRG 6600
9	M8	6.8	10.5	6.2	4	24794	35574	3.2	WRG 9200
						31850	49784		WRG 9300
						41650	71148		WRG 9400
						47726	85358		WRG 9500
						56448	106820		WRG 9600
						64974	120540		WRG 9700
						70070	142100		WRG 9800
						75264	156800		WRG 9900
						82810	178360		WRG 91000

DIAMOND CASE

Cross Roller Bearing Guideway

WRGW	2	-	070	H	-	10Z
WRGW -Std WRWGA -St.Stl	Roller Size		Length of Rail(mm)	Accuaracy Blank -Normal H -High P -Precision		# of rollers

Dimensions in mm										
Part Nuber	Maximum Stroke	D	No. of Roller (Z)	L	A	t	B1	B2	C	P1
WRGW 1020	12	1.5	5	20	4.5	0.5	17	7.6	3.8	13.4
WRGW 1030	22		7	30						
WRGW 1040	27		10	40						
WRGW 1050	32		13	50						
WRGW 1060	37		16	60						
WRGW 1070	42		19	70						
WRGW 1080	52		21	80						
WRGW 2030	18	2	5	30	6.5	0.5	24	11	5.5	19
WRGW 2045	24		8	45						
WRGW 2060	30		11	60						
WRGW 2075	44		13	75						
WRGW 2090	50		16	90						
WRGW 2105	64		18	105						
WRGW 2120	70		21	120						
WRGW 3050	28	3	7	50	8.5	0.5	36	16.6	8.3	29
WRGW 3075	48		10	75						
WRGW 3100	58		14	100						
WRGW 3125	78		17	125						
WRGW 3150	88		21	150						
WRGW 3175	108		24	175						
WRGW 3200	118		28	200						
WRGW 4080	58	4	7	80	11.5	0.5	44	20.4	10.2	35
WRGW 4120	82		11	120						
WRGW 4160	106		15	160						
WRGW 4200	130		19	200						
WRGW 4240	154		23	240						
WRGW 4280	178		27	280						

DIAMOND CASE

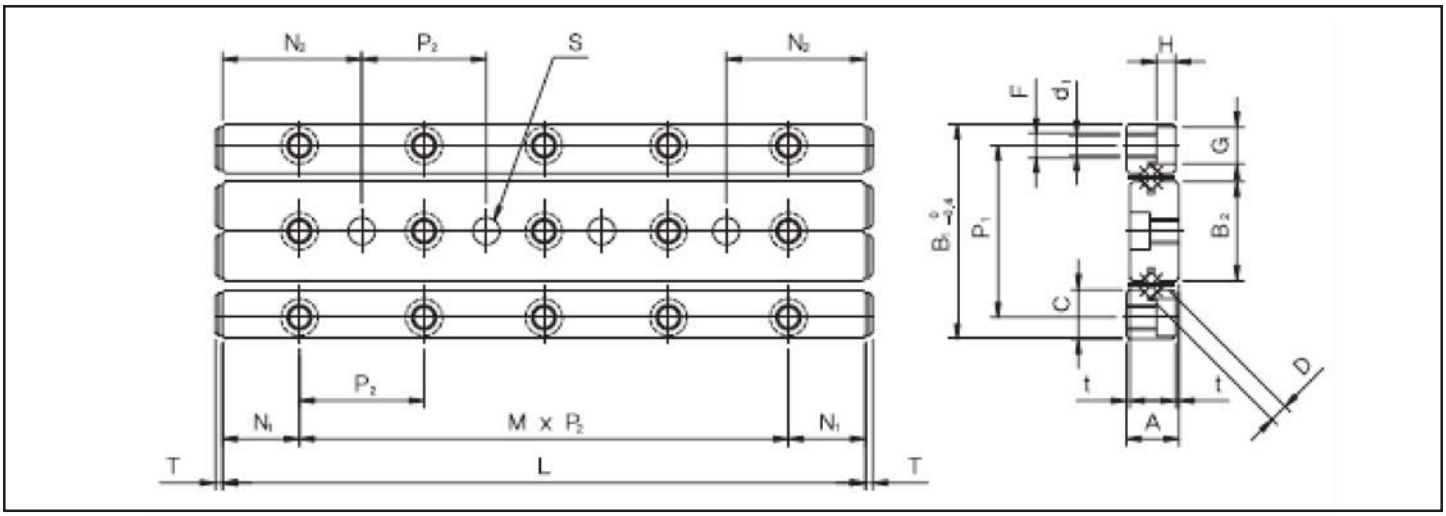

Dimensions in mm										
M x P	N1	F	d1	G	H	T	Basic Load Ratings		Mass kg/m (rail/ea.)	Part Nuber
							Dyn C (N)	Stat. C (N)		
1 x 10	5	M2	1.65	3	1.4	1.5	333	303	0.46	WRGW 1020
2 x 10							450	460		WRGW 1030
3 x 10							666	764		WRGW 1040
4 x 10							764	921		WRGW 1050
5 x 10							940	1225		WRGW 1060
6 x 10							1029	1372		WRGW 1070
7 x 10							1117	1528		WRGW 1080
1 x 15	7.5	M3	2.55	4.4	2	2	578	578	0.98	WRGW 2030
2 x 15							980	1156		WRGW 2045
3 x 15							1156	1440		WRGW 2060
4 x 15							1323	1724		WRGW 2075
5 x 15							1646	2303		WRGW 2090
6 x 15							1803	2597		WRGW 2105
7 x 15							1950	2920		WRGW 2120
1 x 25	12.5	M4	3.3	6	3.1	2.5	1764	2077	1.94	WRGW 3050
2 x 25							2508	3459		WRGW 3075
3 x 25							3332	4841		WRGW 3100
4 x 25							3684	5537		WRGW 3125
5 x 25							4351	6918		WRGW 3150
6 x 25							4998	8300		WRGW 3175
7 x 25							5605	9682		WRGW 3200
1 x 40	20	M5	4.3	8	4.2	2.5	3488	4263	3.36	WRGW 4080
2 x 40							5116	7105		WRGW 4120
3 x 40							6586	9996		WRGW 4160
4 x 40							7958	12838		WRGW 4200
5 x 40							9232	15680		WRGW 4240
6 x 40							10486	18522		WRGW 4280

DIAMOND CASE

Cross Roller Mini Table

WRGT	2	-	070
WRGT-Std	Roller Size		Length of Table (mm)

Dimensions in mm													
Part Nuber	Maximum Stroke	Width W +/- 0.1	Height M +/- 0.1	Length L	B	F	n x F	G	S	F1	n x F1	D1	G1
WRGT 1025	12			25		181	1 x 18	3.5			1 x 10		
WRGT 1035	18			35		28	1 x 28	3.5			2 x 10		
WRGT 1045	25			45		20	1 x 20	12.5			3 x 10		
WRGT 1055	32	20	8	55	14	30	1 x 30	12.5	M2.6	10	4 x 10	4.1	7.5
WRGT 1065	40			65		20	2 x 20	12.5			5 x 10		
WRGT 1075	45			75		30	1 x 30	22.5			6 x 10		
WRGT 1085	50			85		30	2 x 30	12.5			7 x 10		
WRGT 2035	18			35		28	1 x 28	3.5			1 x 15		
WRGT 2050	30			50		43	1 x 43	3.5			2 x 15		
WRGT 2065	40			65		30	1 x 30	17.5			3 x 15		
WRGT 2080	50	30	12	80	22	45	1 x 45	17.5	M3	15	4 x 15	6	10
WRGT 2095	60			95		30	2 x 30	17.5			5 x 15		
WRGT 2110	70			110		45	1 x 45	32.5			6 x 15		
WRGT 2125	80			125		45	2 x 45	17.5			7 x 15		
WRGT 3055	30			55		40	1 x 40	7.5			1 x 25		
WRGT3080	45			80		65	1 x 65	7.5			2 x 25		
WRGT 3105	60			105		50	1 x 50	27.5			3 x 25		
WRGT 3130	75	40	16	130	30	75	1 x 75	27.5	M4	25	4 x 25	7.5	15
WRGT 3155	90			155		50	2 x 50	27.5			5 x 25		
WRGT 3180	105			180		75	1 x 75	52.5			6 x 25		
WRGT 3205	130			205		75	2 x 75	27.5			7 x 25		

DIAMOND CASE

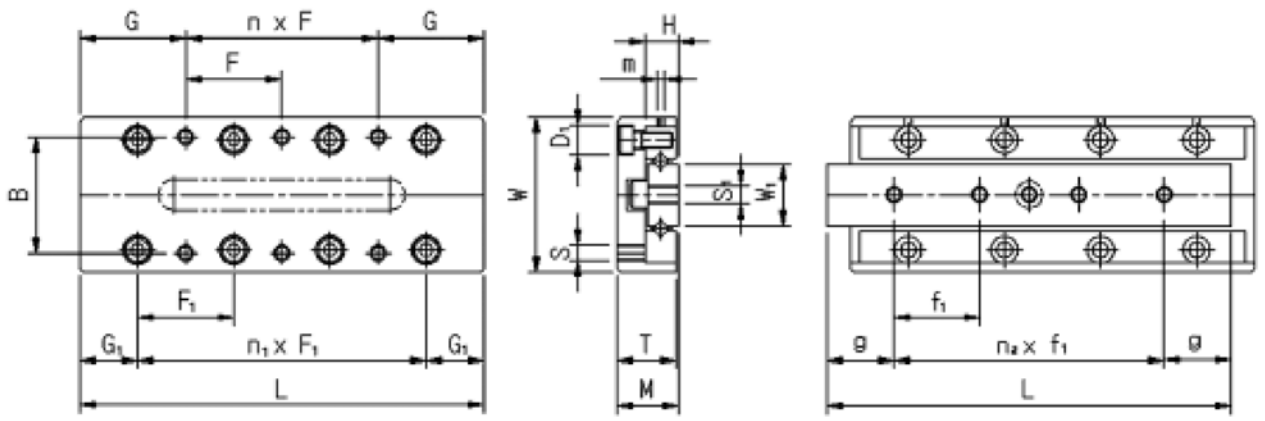

Dimensions in mm												
T	H	W1	m	S1	f1	n x f1	g	Basic Load Ratings		Accuracy (microns)		Part Nuber
								Dyn C (N)	Stat. C (N)	C	D	
7.5	4	6.6	M2	M2.6	4.5	2 x 7.5	5.0	284	274	2	4	WRGT 1025
					10.0	2 x 10	7.5	382	412	2	4	WRGT 1035
					10.0	3 x 10	7.5	559	686	2	5	WRGT 1045
					10.0	4 x 10	7.5	647	823	2	5	WRGT 1055
					10.0	5 x 10	7.5	725	960	2	5	WRGT 1065
					10.0	6 x 10	7.5	872	1274	2	5	WRGT 1075
					10.0	7 x 10	7.5	941	1372	2	5	WRGT 1085
11.5	6	12	M2	M3	20.0	1 x 20	7.5	510	510	2	4	WRGT 2035
					15.0	2 x 15	10.0	686	764	2	4	WRGT 2050
					15.0	3 x 15	10.0	853	980	2	5	WRGT 2065
					15.0	4 x 15	10.0	980	1274	2	5	WRGT 2080
					15.0	5 x 15	10.0	1176	1470	2	5	WRGT 2095
					15.0	6 x 15	10.0	1470	2058	2	5	WRGT 2110
					15.0	7 x 15	10.0	1568	2254	2	5	WRGT 2125
15.5	8	16	M2	M4	35.0	1 x 35	10.0	1274	1372	2	5	WRGT 3055
					25.0	2 x 25	15.0	2156	2842	2	5	WRGT3080
					25.0	3 x 25	15.0	2940	4214	3	6	WRGT 3105
					25.0	4 x 25	15.0	3626	5684	3	6	WRGT 3130
					25.0	5 x 25	15.0	3920	6370	3	6	WRGT 3155
					25.0	6 x 25	15.0	4018	6566	3	6	WRGT 3180
					25.0	7 x 25	15.0	4214	7154	3	6	WRGT 3205

Cross Roller Table

WRGU	2	-	070
WRGU -Std	Roller Size		Length of Table (mm)

Dimensions in mm															
Part Nuber	Maximum Stroke	Width W	Height M +/- 0.1	Length L	Mass (kg)	B	n x F	G	S	n x F1	G1	G2	b1	t1	S1 x ℓ
WRGU 1025	12	30 -0.2/-0.4	17	25	.08	10	---	12.5	M2	1 x 10	7.5	2.5	12	2.5	M2 x 4
WRGU 1035	18			35	.11		1 x 10			2 x 10		4.5			
WRGU 1045	25			45	.15		2 x 10			3 x 10		6.0			
WRGU 1055	32			55	.18		3 x 10			4 x 10		7.5			
WRGU 1065	40			65	.21		4 x 10			5 x 10		8.5			
WRGU 1075	45			75	.24		5 x 10			6 x 10		11.0			
WRGU 1085	50			85	.27		6 x 10			7 x 10		13.5			
WRGU 2035	18	40 -0.2/-0.4	21	35	.20	15	---	17.5	M3	1 x 15	10	3	16	3.4	M2 x 4
WRGU 2050	30			50	.26		1 x 15			2 x 15		4.5			
WRGU 2065	40			65	.34		2 x 15			3 x 15		7.0			
WRGU 2080	50			80	.42		3 x 15			4 x 15		9.5			
WRGU 2095	60			95	.50		4 x 15			5 x 15		12.0			
WRGU 2110	70			110	.58		5 x 15			6 x 15		14.5			
WRGU 2125	80			125	.66		6 x 15			7 x 15		17.0			
WRGU 3055	30	60 +/- 0.1	28	55	.57	25	---	27.5	M4	1 x 25	15	5.5	40	5.5	M3 x 6
WRGU 3080	45			80	.80		1 x 25			2 x 25		10.5			
WRGU 3105	60			105	1.03		2 x 25			3 x 25		15.5			
WRGU 3130	75			130	1.26		3 x 25			4 x 25		20.5			
WRGU 3155	90			155	1.49		4 x 25			5 x 25		25.5			
WRGU 3180	105			180	1.72		5 x 25			6 x 25		30.5			
WRGU 3205	130			205	1.95		6 x 25			7 x 25		30.5			

DIAMOND CASE

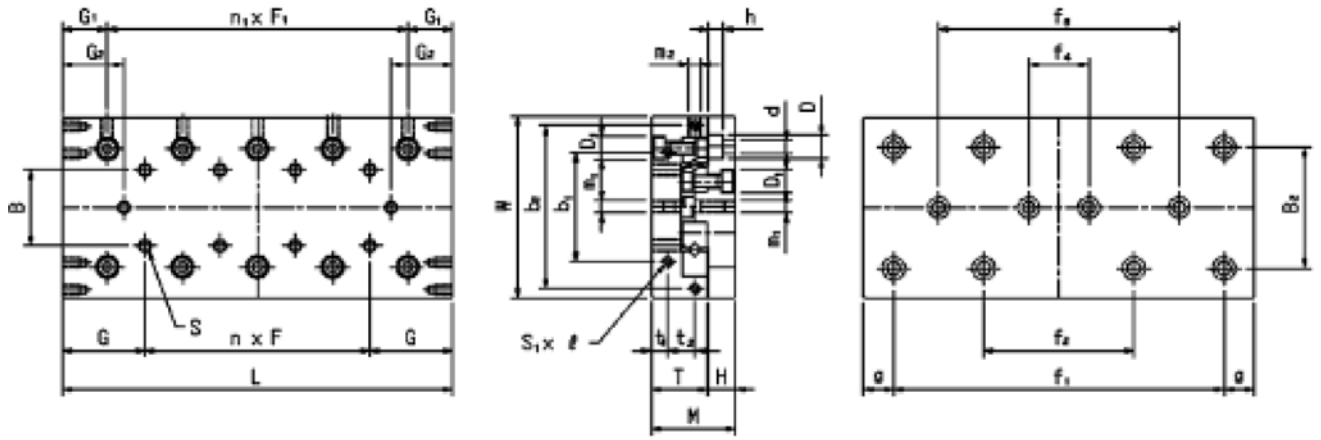

Dimensions in mm															
T	H	d x D x h	D1	m1	m2	B2	f1	f2	f3	g	Basic Load Ratings		Accuracy (microns)		Part Nuber
											Dyn C (N)	Stat. C (N)	C	D	
11	5.5	2.55 x 4.1 x 2.5	4.1	M2	M2	22	18	---	---	3.5	284	274	2	4	WRGU 1025
							28	---	---		382	412	2	4	WRGU 1035
							38	---	---		559	686	2	4	WRGU 1045
							48	28	---		647	823	2	5	WRGU 1055
							58	38	---		725	960	2	5	WRGU 1065
							68	48	---		872	1274	2	5	WRGU 1075
							78	58	---		941	1372	2	5	WRGU 1085
14	6.4	3.5 x 6 x 3.5	6.0	M3	M3	30	25	---	---	5	510	510	2	4	WRGU 2035
							40	---	---		686	764	2	4	WRGU 2050
							55	---	---		853	980	2	5	WRGU 2065
							70	40	---		980	1274	2	5	WRGU 2080
							85	55	---		1176	1470	2	5	WRGU 2095
							100	70	---		1470	2058	3	6	WRGU 2110
							115	85	---		1568	2254	3	6	WRGU 2125
18.5	9	4.5 x 7.5 x 5	7.5	M4	M4	40	35	---	---	10	1274	1372	2	5	WRGU 3055
							60	---	---		2156	2842	2	5	WRGU 3080
							85	---	---		2940	4214	3	6	WRGU 3105
							110	---	---		3626	5684	3	6	WRGU 3130
							135	---	85		3920	6370	3	6	WRGU 3155
							160	---	110		4018	6566	3	7	WRGU 3180
							185	85	135		4214	7154	3	7	WRGU 3205

DIAMOND CASE

Cross Roller Table

WRGU	2	-	070
WRGU -Std	Roller Size		Length of Table (mm)

Dimensions in mm																
Part Nuber	Maximum Stroke	Width W +/- 0.1	Height M +/- 0.1	Length L	Mass (kg)	B	n x F	G	S	n x F1	G1	G2	b1	t1	t2	S1 x ℓ
WRGU 4085	50	80	35	75	1.5	40	---	40	M5	1 x 40	22.5	10.5	55	6.5	---	M3 x 6
WRGU 4125	75			125	2.3		1 x 40			2 x 40		18.0				
WRGU 4165	105			165	3.1		2 x 40			3 x 40		23.0				
WRGU 4205	130			205	3.8		3 x 40			4 x 40		30.5				
WRGU 4245	155			245	4.6		4 x 40			5 x 40		38.5				
WRGU 4285	185			485	5.3		5 x 40			6 x 40		43.0				
WRGU 6110	60	100	45	110	3.2	50	---	50	M6	1 x 50	30.0	16.0	60	8	15	M4 x 8
WRGU 6160	95			160	4.6		1 x 50			2 x 50		23.5				
WRGU 6210	130			210	6.0		2 x 50			3 x 50		31.0				
WRGU 6260	165			260	7.4		3 x 50			4 x 50		38.5				
WRGU 6310	200			310	8.7		4 x 50			5 x 50		46.0				
WRGU 6360	235			360	10.1		5 x 50			6 x 50		53.5				
WRGU 6410	265			410	11.5		6 x 50			7 x 50		63.5				
WRGU 9210	130	145	60	210	12.0	85	---	85	M8	---	55.0	27.0	90	11	20	M4 x 8
WRGU 9310	180			310	17.6		1 x 100			1 x 100		52.0				
WRGU 9410	350			410	23.2		2 x 100			2 x 100		17.0				
WRGU 9510	450			510	28.8		3 x 100			3 x 100		17.0				
WRGU 9610	550			610	34.4		4 x 100			4 x 100		17.0				
WRGU 9710	650			710	40.0		5 x 100			5 x 100		17.0				
WRGU 9810	750			810	45.6		6 x 100			6 x 100		17.0				
WRGU 9910	850			910	51.2		7 x 100			7 x 100		17.0				
WRGU 1010	950			1010	56.8		8 x 100			8 x 100		17.0				

DIAMOND CASE

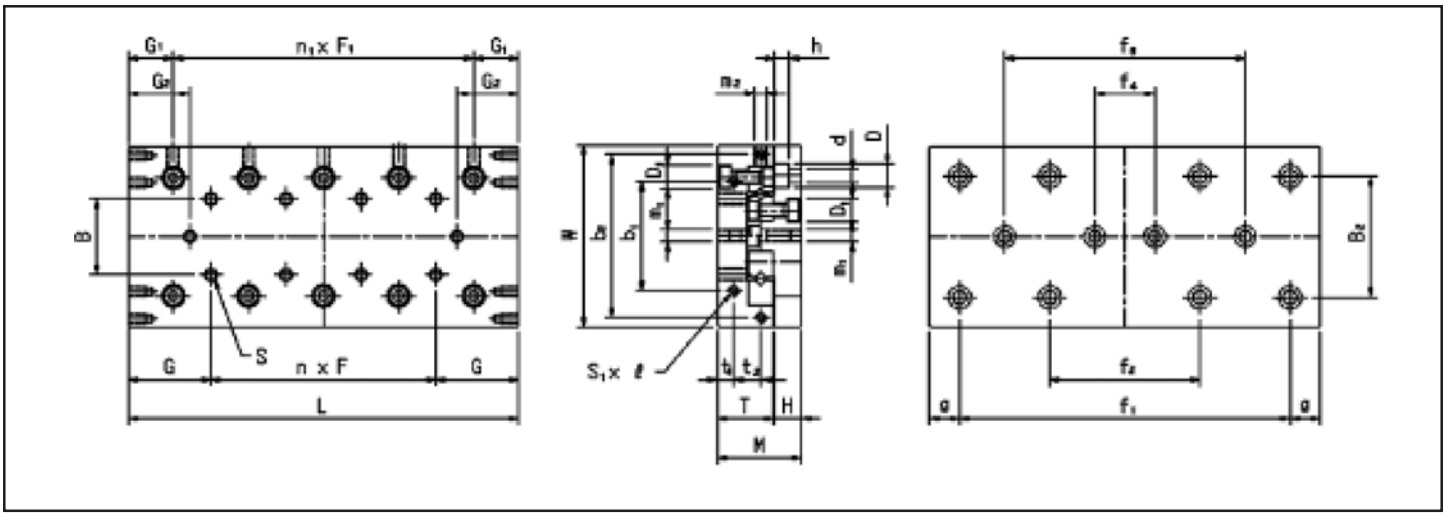

Dimensions in mm																
T	H	d x D x h	D1	m1	m2	B2	f1	f2	f3	f4	g	Basic Load Ratings		Accuracy (microns)		Part Nuber
												Dyn C (N)	Stat. C (N)	C	D	
24	10.5	5.5x9.5x6	9.5	M4	M4	60	65	---	---	---	10	3528	4802	2	5	WRGU 4085
							80	---	---	---	22.5	5194	8036	3	6	WRGU 4125
							120	---	---	---	22.5	6762	11270	3	7	WRGU 4165
							160	80	---	---	22.5	8134	14504	3	7	WRGU 4205
							200	120	---	---	22.5	9408	17640	3	7	WRGU 4245
							240	160	---	---	22.5	10682	20876	3	7	WRGU 4285
31	13	7x11x7	11	M5	M5	60	90	---	---	---	10	7448	10584	3	6	WRGU 6110
							140	---	---	---	10	9310	14112	3	6	WRGU 6160
							190	---	90	---	10	12544	21168	3	7	WRGU 6210
							240	---	140	---	10	15582	28244	3	7	WRGU 6260
							290	---	190	---	10	17052	31752	4	8	WRGU 6310
							340	140	240	---	10	19796	38808	4	8	WRGU 6360
							390	190	290	---	10	22442	45864	4	8	WRGU 6410
43	16	9x14x9	14	M8	M6	90	100	---	---	---	55	20874	34888	3	7	WRGU 9210
							200	---	---	---	55	31850	61504	3	7	WRGU 9310
							300	---	100	---	55	31850	61504	4	8	WRGU 9410
							400	---	200	---	55	38416	78498	4	8	WRGU 9510
							500	100	300	---	55	44688	95942	4	9	WRGU 9610
							600	200	400	---	55	50566	113680	4	9	WRGU 9710
							700	300	500	100	55	53508	122500	5	10	WRGU 9810
							800	400	600	200	55	59094	139160	5	10	WRGU 9910
							900	500	700	300	55	64582	156800	5	10	WRGU 1010

DIAMOND CASE

ValueTrac II Linear Ball Bearings and Pillow Blocks- Metric

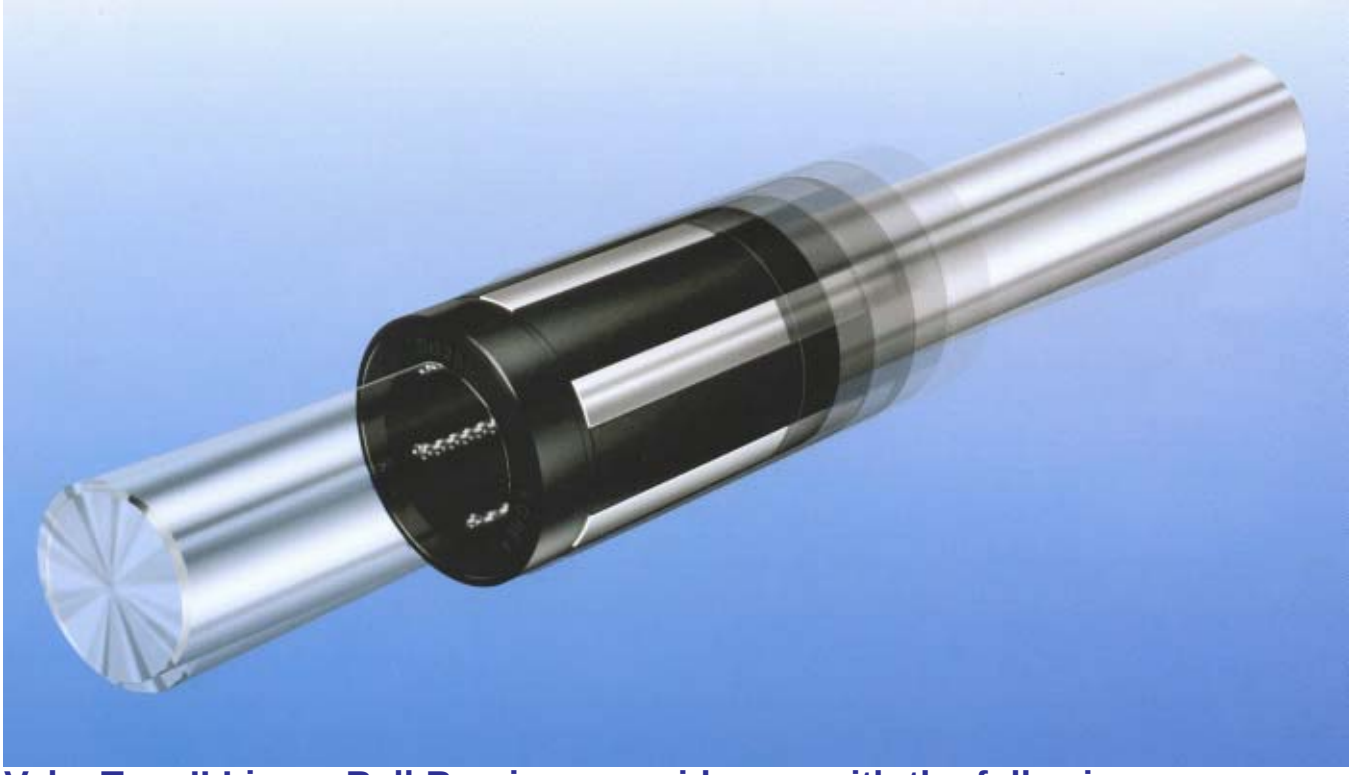

ValueTrac II Linear Ball Bearings provide you with the following:

3 times more load capacity than conventional linear bearings...Allows you to use smaller, less expensive bearings to carry a load.

Integral seals... Reduces space requirements to keep lubrication in and contamination out of the bearing.

Independently self-aligning outer bearing races...insures smooth running bearings by absorbing miss-alignment up to 1/2 degree.

A ball conforming outer race coupled with self-alignment feature...allows for zero bearing clearance while maintaining smooth operation.

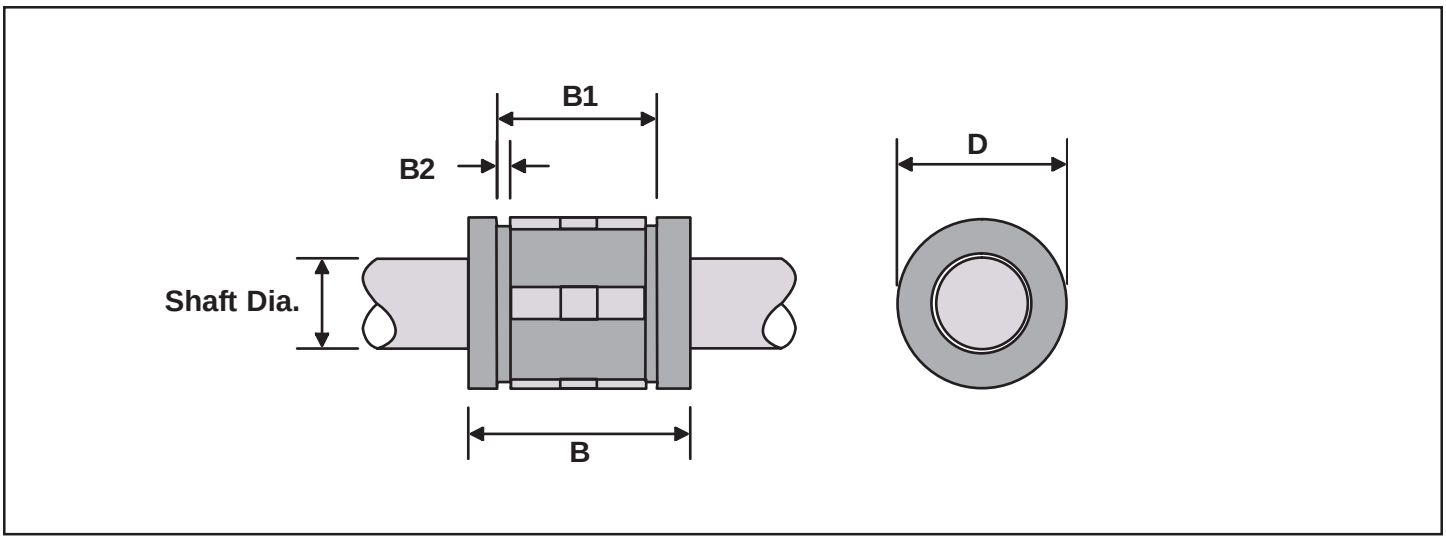

Closed Type Bearings For End Supported Application - European Metric (ISO)

Part Number without seal	Part Number with seal	Nominal Shaft Diameter	Number of Ball Circuits	Housing Bore Dia. (H7 Tol.) D	B	B1	B2	Maximum Load Capacity (N)
SBE16	SBE16UU	16	5	26	36	24.6	1.3	1200
SBE20	SBE20UU	20	6	32	45	31.2	1.6	2400
SBE25	SBE25UU	25	6	40	58	43.7	1.85	4600
SBE30	SBE30UU	30	6	47	68	51.7	1.85	5700
SBE40	SBE40UU	40	6	62	80	60.3	2.15	9500
SBE50	SBE50UU	50	6	75	100	77.3	2.68	1400

1. Load ratings are based upon 50km of travel and a shaft hardness of HRC60 or more. The actual load rating is dependant upon the direction of the applied load relative to the bearing's ball track locations. See the polar chart for appropriate derating factors.

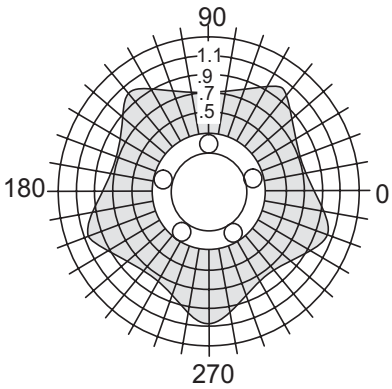

16

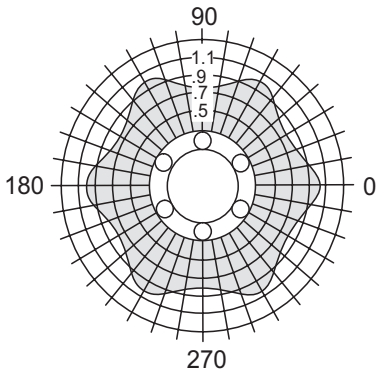

20, 25, 30, 40, 50

DIAMOND CASE

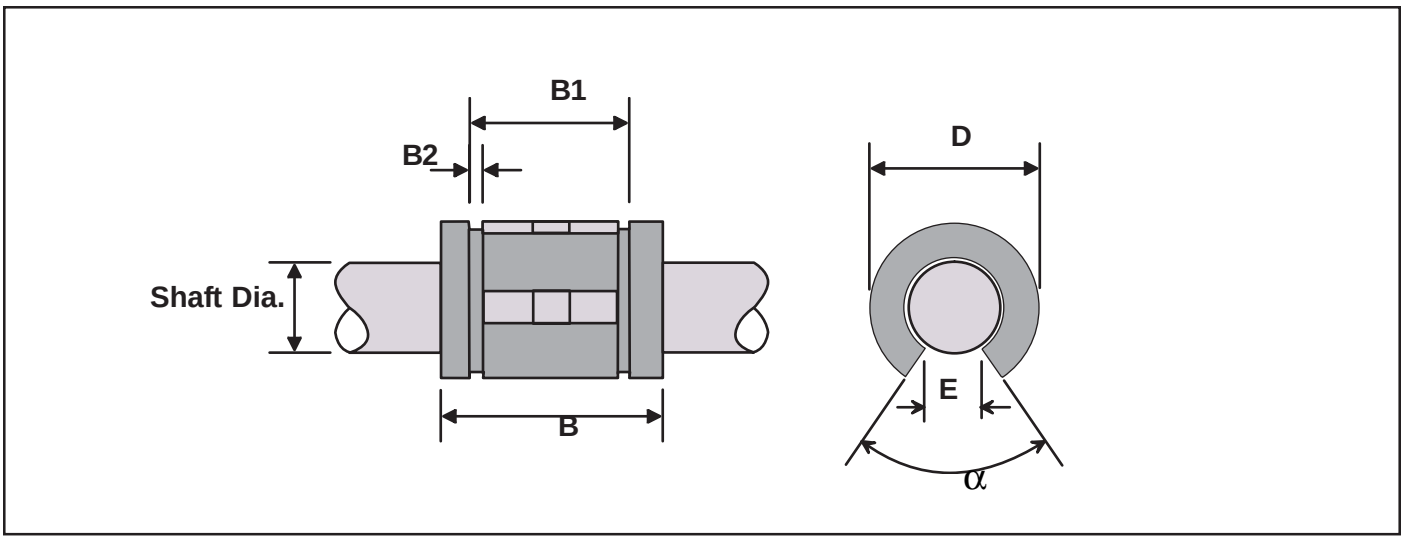

Open Type Bearings For Fully Supported Shafts - European Metric (ISO)

Part Number without seal	Part Number with seal	Nominal Shaft Diameter	# of Ball Circuits	Housing Bore Dia. (H7 Tol.) D	D1	B	B1	B2	E	α (deg.)	Max. Load Rating (N)
SBEO16	SBEO16UU	16	4	26	24.9	36	24.6	1.3	9.0	68	1200
SBEO20	SBEO20UU	20	5	32	30.5	45	31.2	1.6	9.0	55	2400
SBEO25	SBEO25UU	25	5	40	38.5	58	43.7	1.85	11.5	57	4600
SBEO30	SBEO30UU	30	5	47	44.5	68	51.7	1.85	14.0	57	5700
SBEO40	SBEO40UU	40	5	62	58.5	80	60.3	2.15	19.5	56	9500
SBEO50	SBEO50UU	50	5	75	71.5	100	77.3	2.65	22.5	54	14000

1. Load ratings are based upon 50km of travel and a shaft hardness of HRC60 or more. The actual load rating is dependant upon the direction of the applied load relative to the bearing's ball track locations. See the polar chart for appropriate derating factors.

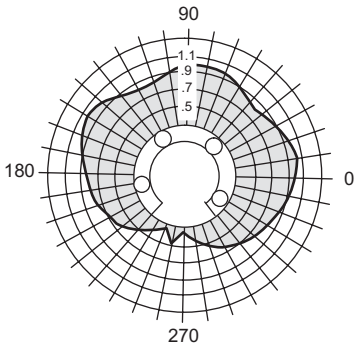

16

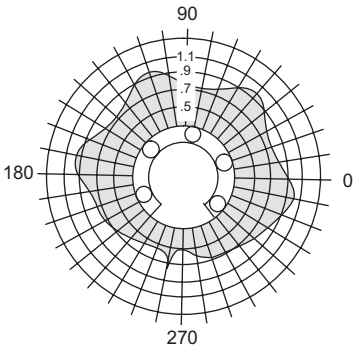

20, 25, 30, 40, 50

DIAMOND CASE

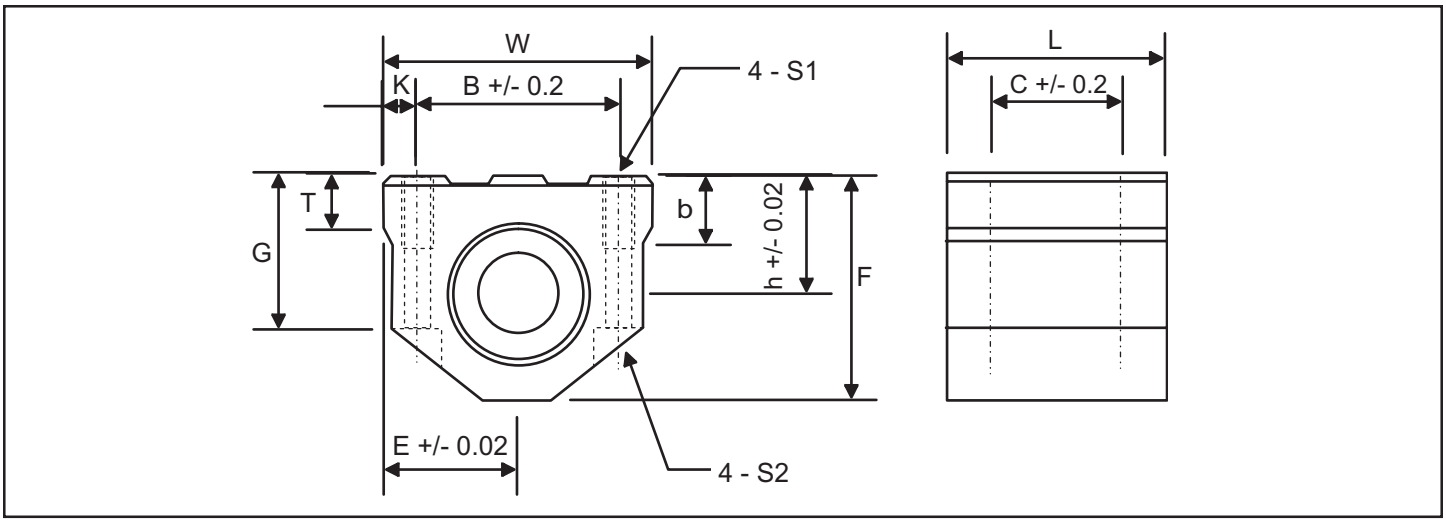

Closed Type Pillow Block - European Metric

Dimensions in mm																	
Part Number	Dimensions							Mounting Dimensions						Shaft Dia. d	# of Ball Tracks	Load Ratings	
	h	E	W	L	F	G	T	B	C	K	b	S1	S2			Dyn C (N)	Static Co (N)
CS16UU-B	22	26.5	53	43	42	29	10	40	26	6.5	13	M6	M5	16	5	1176	607
CS20UU-B	25	30.0	60	54	50	34	12	45	32	7.5	18	M8	M6	20	6	2352	1254
CS25UU-B	30	39.0	78	67	60	40	15	60	40	9.0	22	M10	M8	25	6	4508	2195
CS30UU-B	35	43.5	87	79	70	48	17	68	45	9.5	22	M10	M8	30	6	5580	2959
CS40UU-B	45	54.0	108	91	90	62	22	86	58	11.0	26	M12	M10	40	6	9310	4312
CS50UU-B	50	66.0	132	113	105	68	25	108	50	12.0	34	M16	M12	50	6	13720	6762

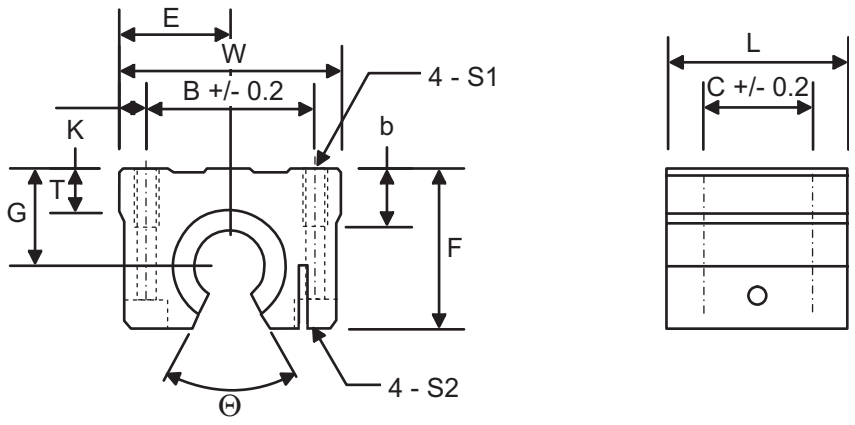

Open-Adjustable Type Pillow Block - European Metric

Dimensions in mm																	
Part Number	Dimensions								Mounting Dimensions					Shaft Dia. d	# of Ball Tracks	Load Ratings	
	h	E	W	L	F	T	h1	Ø (Deg)	B	C	b	S1	S2			Dyn C (N)	Static Co (N)
CSO16UU-B	22	26.5	53	43	35	8	9.0	68	40	26	13	M6	M5	16	4	1176	607
CSO20UU-B	25	30.0	60	54	42	10	9.0	55	45	32	18	M8	M6	20	5	2352	1254
CSO25UU-B	30	39.0	78	67	51	13	11.5	57	60	40	22	M10	M8	25	5	4508	2195
CSO30UU-B	35	43.5	87	79	60	15	14.0	57	68	45	22	M10	M8	30	5	5580	2959
CSO40UU-B	45	54.0	108	91	77	20	19.5	56	86	58	26	M12	M10	40	5	9310	4312
CSO50UU-B	50	66.0	132	113	88	25	22.5	54	108	50	34	M16	M12	50	5	13720	6762

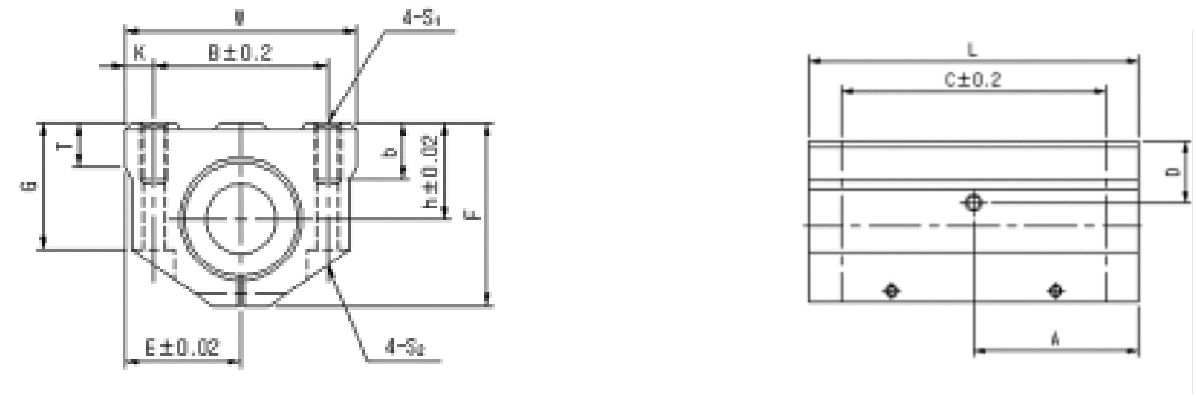

Twin Closed Type Pillow Block - European Metric

Dimensions in mm																	
Part Number	Dimensions							Mounting Dimensions						Shaft Dia. d	# of Ball Tracks	Load Ratings	
	h	E	W	L	F	G	T	B	C	K	b	S1	S2			Dyn C (N)	Static Co (N)
CSW16UU-B	22	26.5	53	84	42	29	10	40	64	6.5	13	M6	M5	16	5	1900	1215
CSW20UU-B	25	30.0	60	104	50	34	12	45	76	7.5	18	M8	M6	20	6	3812	2508
CSW25UU-B	30	39.0	78	130	60	40	15	60	94	9.0	22	M10	M8	25	6	7310	4390
CSW30UU-B	35	43.5	87	152	70	48	17	68	106	9.5	22	M10	M8	30	6	9055	5919
CSW40UU-B	45	54.0	108	176	90	62	22	86	124	11.0	26	M12	M10	40	6	15092	8624
CSW50UU-B	50	66.0	132	224	105	68	25	108	160	12.0	34	M16	M12	50	6	22246	13524

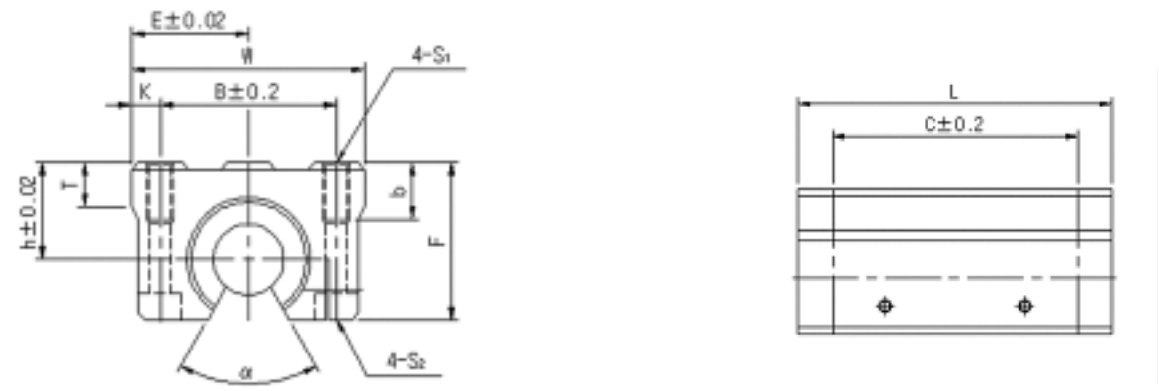

Twin Open Adjustable Type Pillow Block - European Metric

Dimensions in mm																	
Part Number	Dimensions								Mounting Dimensions					Shaft Dia. d	# of Ball Tracks	Load Ratings	
	h	E	W	L	F	T	h1	Ø (Deg)	B	C	b	S1	S2			Dyn C (N)	Static Co (N)
CSOW16UU-B	22	26.5	53	84	35	10	9.0	68	40	64	13	M6	M5	16	4	2195	1430
CSOW20UU-B	25	30.0	60	104	42	12	9.0	55	45	76	18	M8	M6	20	5	3871	2548
CSOW25UU-B	30	39.0	78	130	51	15	11.5	57	60	94	22	M10	M8	25	5	9408	4468
CSOW30UU-B	35	43.5	87	152	60	17	14.0	57	68	106	22	M10	M8	30	5	11088	6036
CSOW40UU-B	45	54.0	108	176	77	22	19.5	56	86	124	26	M12	M10	40	5	15288	8820
CSOW50UU-B	50	66.0	132	224	88	25	22.5	54	108	160	34	M16	M12	50	5	21854	13720

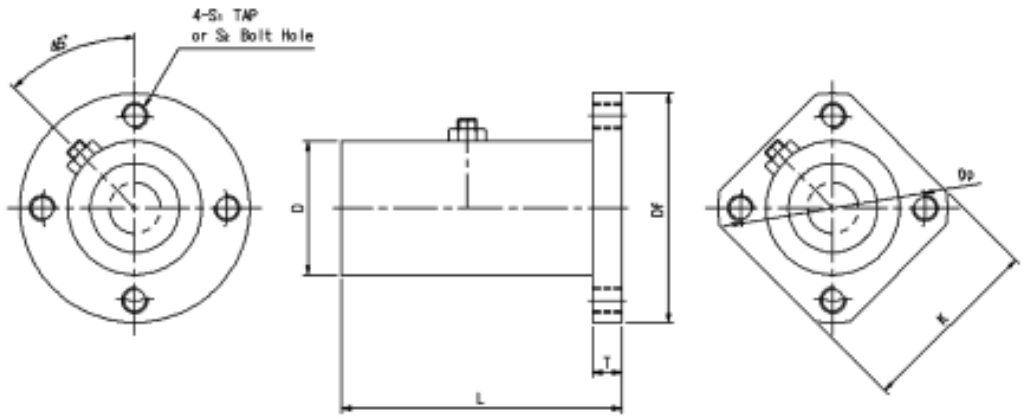

SHF Greasing hole is 'OPTION' SHK

Twin Flange Type Pillow Block

Dimensions In mm												
Part Number	Dh7	L	Df	T	Dp	K	S1	S2	Shaft d	# of Ball Rows	Load Ratings	
											Dyn. C (N)	Static Co (N)
SHF16	42	88	72	9	58	--	M8	M6	16	5	1989	1274
SHK16						58						
SHF20	48	98	78	10	64	--	M8	M6	20	6	3733	2450
SHK20						64						
SHF25	58	134	90	11	76	--	M8	M6	25	6	6987	4116
SHK25						76						
SHF30	65	144	104	12	86	--	M10	M8	30	6	7781	5096
SHK30						86						
SHF40	84	178	124	14	106	--	M10	M8	40	6	15092	8624
SHK40						106						
SHF50	102	224	150	15	128	--	M12	M10	50	6	26264	12936
SHK50						128						

Miniature Ball Splines

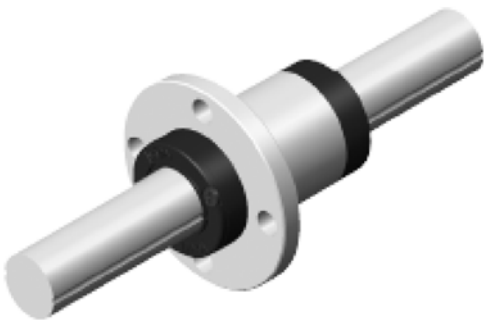

Miniature Ball Splines provide you with the following:

Compact and cost effective solutions for applications that require linear motion with anti-rotation.

The ability to preload the assembly and eliminate backlash for applications requiring precise agular positioning.

Normal, High and Precision accuracy grades to suite a variety of application needs.

Both cylindrical with keyway and flange nut designs.

Ball Spline

2	WSP	4	-	S	150	CM	H	
Qty of Nut	WSP -Style	Spline dia.	Solid Spline	Length of Spline(mm)	Prebad CT -Tight CM -Middle CL -Loose	Accuracy _ -Normal H -High P -Precision	Material _ -SUJ2 A -St.Stl	

Dimensions in mm													
Part Number	D	Allowable Tolerance	L1	L2	W	Allowable Tolerance	t	ℓ	d	Allowable Tolerance	d2	Std Lengths L	Max Length
WSP 4	8	0 / -0.009	12	7.9	---	---	1	---	4	0 / -0.012	3.2	100 150	200
WSP 5	10		18	9.4	2	+0.014 / 0	1.2	6	5		4.2	100 150	300
WSP6	12	0 / -0.011	21	12.4	2		1.2	8	6		5.2	150 200	300
WSP 8	15		25	14.6	2.5		1.5	8.5	8	0 / -0.015	7.0	150 200 250	500
WSP 10	19	0 / -0.013	30	18.2	3		1.8	11	10		8.9	200 300	600
WSP 12	21		35	23	3		1.8	15	12	0 / -0.018	10.9	200 300 400	800
WSP 15	23		40	27	3.5	+0.018 / 0	2	20	13.6		11.6	200 300 400	1000
WSP 20	30	0 / -0.016	50	33	4		2.5	26	18.2	0 / -0.021	15.7	300 400 500 600	1000

DIAMOND CASE

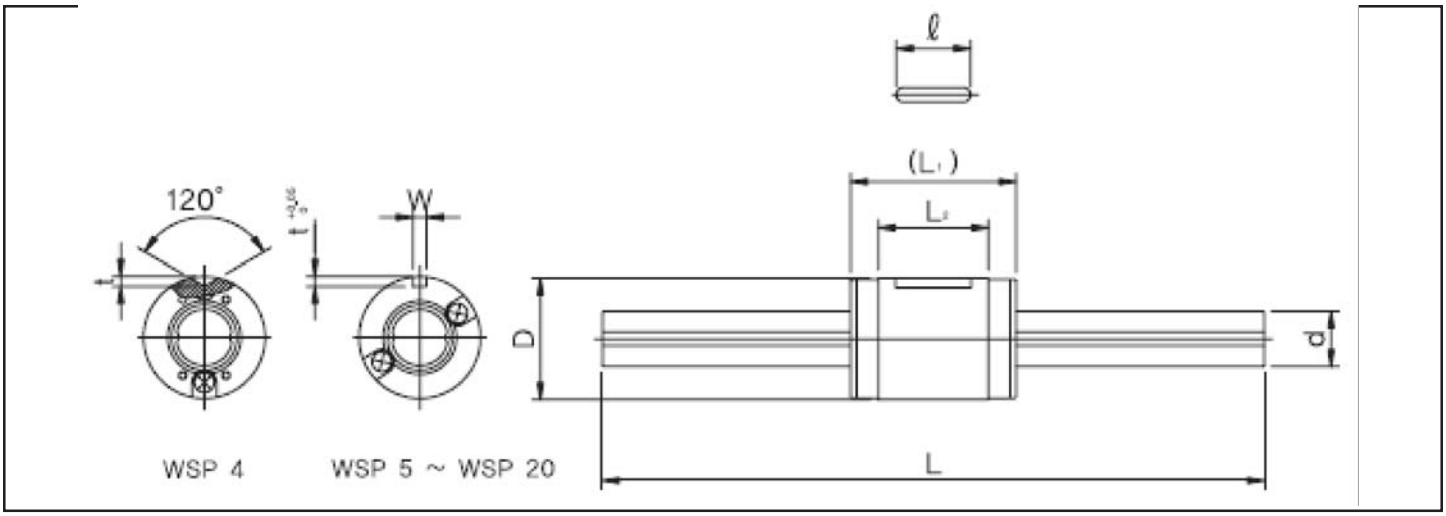

Dimensions in mm							
Basic Load Ratings		Torque Ratings		Static Moment (1)	Mass		Part Number
Dyn. (C) N	Stat. (Co) N	Dyn. (T) N m	Stat. (To) N m	Tm N m	Nut g	Shaft g/100mm	
304	382	0.686	0.882	0.49	2.5	9.6	WSP 4(2)
				2.94			
588	637	1.764	1.960	1.08	4.8	14.9	WSP 5
				7.84			
715	853	2.450	3.038	1.76	8.9	19.0	WSP6
				11.76			
1176	1372	5.488	6.174	3.23	15.9	39.0	WSP 8
				21.56			
1862	2156	10.780	12.740	6.96	31.5	60.5	WSP 10
				41.16			
2156	2646	14.700	18.620	10.78	44.0	87.5	WSP 12
				58.80			
4214	6076	31.360	45.080	27.44	59.5	111.0	WSP 15
				151.90			
6566	9016	65.660	90.600	49.00	130.0	202.0	WSP 20
				287.14			

Twin Ball Spline

2	WSPL	6	-	S	150	CM	H	/A
Qty of Nut	WSPL-Style	Spline dia.	Solid Spline	Length of Spline (mm)	Preload CT-Tight CM-Middle CL-Loose	Accuracy _-Normal H-High P-Precision	Material _-SUJ2 /A-St.Stl

Dimensions in mm														
Part Number	D	Allowable Tolerance	L1	L2	W	Allowable Tolerance	t	ℓ	d	Allowable Tolerance	d2	Std Lengths L	Max Length
WSPL 5	10	0 / -0.009	26	16.9	2	+0.014 / 0	1.2	6	5	0 / -0.012	4.2	100 150	200
WSPL 6	12	0 / -0.011	30	21.4	2		1.2	8	6		5.2	150 200	300
WSPL 8	15		37	26.6	2.5		1.5	8.5	8	0 / -0.015	7.0	150 200 250	500
WSPL 10	19	0 / -0.013	47	34.9	3		1.8	11	10		8.9	200 300	600
WSPL 12	21		54	42	3		1.8	15	12	0 / -0.018	10.9	200 300 400	800
WSPL 15	23		65	52	3.5	+0.018 / 0	2	20	13.6		11.6	200 300 400	1000
WSPL 20	30	0 / -0.016	71	54	4		2.5	26	18.2	0 / -0.021	15.7	300 400 500 600	1000

DIAMOND CASE

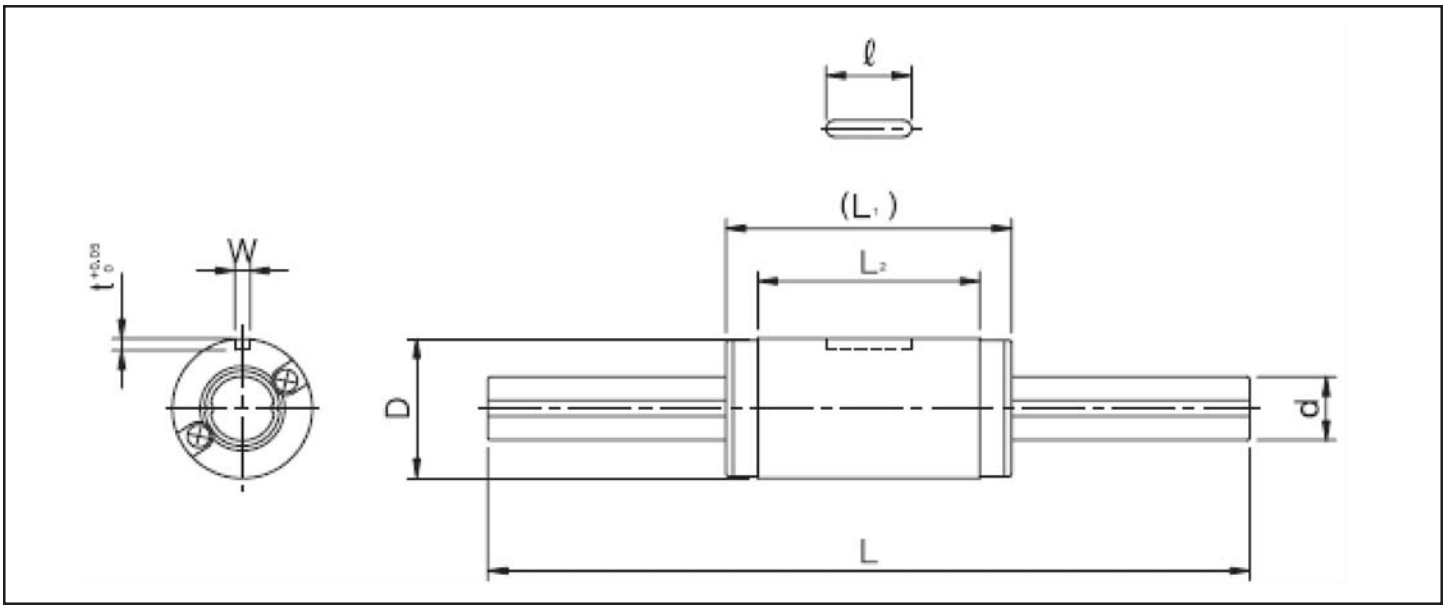

Dimensions in mm							
Basic Load Ratings		Torque Ratings		Static Moment (1)	Mass		Part Number
Dyn. (C) N	Stat. (Co) N	Dyn. (T) N m	Stat. (To) N m	Tm N m	Nut g	Shaft g/100mm	
882	1176	2.64	3.53	3.14	7.9	14.9	WSPF 5
				19.60			
1078	1470	3.63	5.19	5.00	14.5	19.0	WSPF 6
				27.44			
1764	2450	8.33	11.76	9.80	26.5	39.0	WSPF 8
				56.84			
2842	4018	16.66	23.52	22.54	56.5	60.5	WSPF 10
				115.64			
3234	4802	21.56	33.32	32.34	76.8	87.5	WSPF 12
				156.80			
6370	11564	48.02	86.24	94.08	110.0	111.0	WSPF 15
				447.86			
9310	15092	93.10	150.92	127.40	198.0	202.0	WSPF 20
				619.36			

Flange Ball Spline

2	WSPF	4	-	S	150	CM	H	/A
Qty of Nut	WSPF - Style	Spline dia.		Solid Spline	Length of Spline (mm)	Preload CT - Tight CM - Middle CL - Loose	Accuracy _ - Normal H - High P - Precision	Material _ - SUJ2 /A - St.Stl

Dimensions in mm														
Part Number	D	Allowable Tolerance	L1	L2	D1	E	T	pcd	d1	d	Allowable Tolerance	d2	Std Lengths L	Max Length
WSPF 4	8	0 / -0.009	12	7.9	21	4.6	2.5	15	3.4	4	0 / -0.012	3.2	100 150	200
WSPF 5	10		18	9.4	23	7	2.7	17	3.4	5		4.2	100 150	200
WSPF 6	12	0 / -0.011	21	12.4	25	7	2.7	19	3.4	6		5.2	150 200	300
WSPF 8	15		25	14.6	28	9	3.8	22	3.4	8	0 / -0.015	7.0	150 200 250	500
WSPF 10	19	0 / -0.013	30	18.2	36	10	4.1	28	4.5	10		8.9	200 300	600
WSPF 12	21		35	23	38	10	4	30	4.5	12	0 / -0.018	10.9	200 300 400	800
WSPF 15	23		40	27	40	11	4.5	32	4.5	13.6		11.6	200 300 400	1000
WSPF 20	30	0 / -0.016	50	33	46	14	5.5	38	4.5	18.2	0 / -0.021	15.7	300 400 500 600	1000

DIAMOND CASE

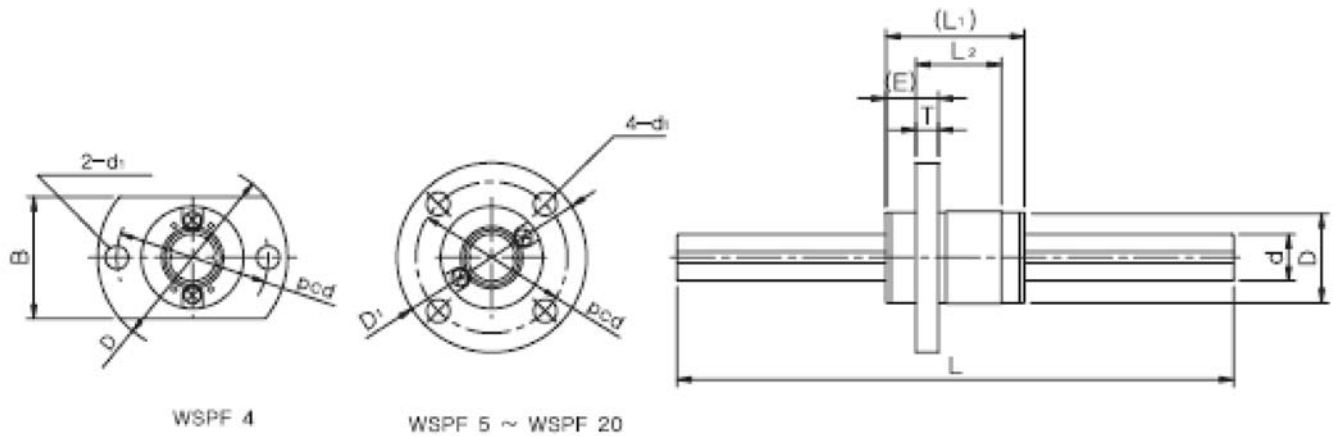

Dimensions in mm							
Basic Load Ratings		Torque Ratings		Static Moment (1)	Mass		Part Number
Dyn. (C) N	Stat. (Co) N	Dyn. (T) N m	Stat. (To) N m	Tm N m	Nut g	Shaft g/100mm	
304	382	0.686	0.882	0.49 / 2.94	5.1	9.6	WSPF 4(2)
588	637	1.764	1.960	1.08 / 7.84	8.9	14.9	WSPF 5
715	853	2.450	3.038	1.76 / 11.76	13.9	19.0	WSPF 6
1176	1372	5.488	6.174	3.23 / 21.56	23.5	39.0	WSPF 8
1862	2156	10.780	12.740	6.96 / 41.16	45.0	60.5	WSPF 10
2156	2646	14.700	18.620	10.78 / 58.80	59.0	87.5	WSPF 12
4214	6076	31.360	45.080	27.44 / 151.90	77.0	111.0	WSPF 15
6566	9016	65.660	90.600	49.00 / 287.14	150.0	202.0	WSPF 20

Flange Twin Ball Spline

2	WSPF	4	-	S	150	CM	H	/A
Qty of Nut	WSPFL-Style	Spline dia.	Solid Spline	Length of Spline(mm)	Preload CT-Tight CM-Middle CL-Loose	Accuracy _ -Normal H-High P-Precision	Material _ -SUJ2 /A-St.Stl

Dimensions in mm														
Part Number	D	Allowable Tolerance	L1	L2	D1	E	T	pcd	d1	d	Allowable Tolerance	d2	Std Lengths L	Max Length
WSPFL 5	10	0 / -0.009	26	16.9	23	7	2.7	17	3.4	5	0 / -0.012	4.2	100 150	200
WSPFL 6	12	0 / -0.011	30	21.4	25	7	2.7	19	3.4	6		5.2	150 200	300
WSPFL 8	15		37	26.6	28	9	3.8	22	3.4	8	0 / -0.015	7.0	150 200 250	500
WSPFL 10	19	0 / -0.013	47	34.9	36	10	4.1	28	4.5	10		8.9	200 300	600
WSPFL 12	21		54	42	38	10	4	30	4.5	12	0 / -0.018	10.9	200 300 400	800
WSPFL 15	23		65	52	40	11	4.5	32	4.5	13.6		11.6	200 300 400	1000
WSPFL 20	30	0 / -0.016	71	54	46	14	5.5	38	4.5	18.2	0 / -0.021	15.7	300 400 500 600	1000

DIAMOND CASE

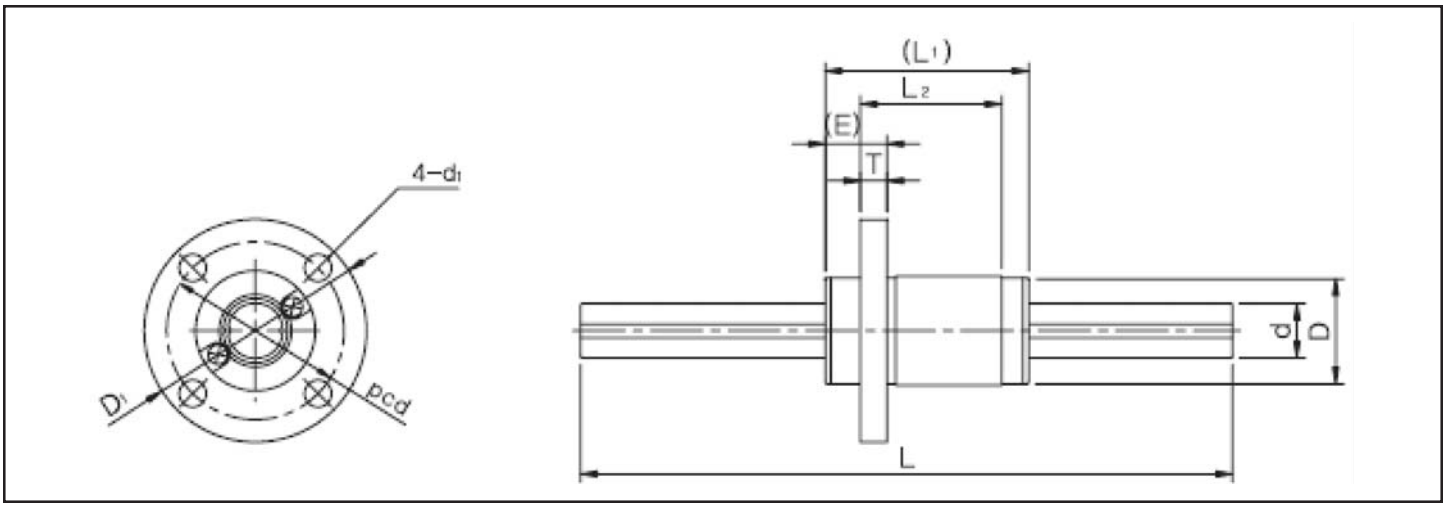

Dimensions in mm							
Basic Load Ratings		Torque Ratings		Static Moment (1)	Mass		Part Number
Dyn. (C) N	Stat. (Co) N	Dyn. (T) N m	Stat. (To) N m	Tm N m	Nut g	Shaft g/100mm	
882	1176	2.64	3.53	3.14	12.0	14.9	WSPF 5
				19.60			
1078	1470	3.63	5.19	5.00	19.5	19.0	WSPF 6
				27.44			
1764	2450	8.33	11.76	9.80	34.1	39.0	WSPF 8
				56.84			
2842	4018	16.66	23.52	22.54	70.0	60.5	WSPF 10
				115.64			
3234	4802	21.56	33.32	32.34	91.8	87.5	WSPF 12
				156.80			
6370	11564	48.02	86.24	94.08	127.5	111.0	WSPF 15
				447.86			
9310	15092	93.10	150.92	127.40	218.0	202.0	WSPF 20
				619.36			

ValueTrac Linear Ball Bearings - Metric

ValueTrac* Linear Ball Bearings provide you with the following:

Conformance to industry standards at a fraction of the cost

A Coefficient of friction as low as 0.001.

Integral seals for space and cost reduction.

Solid outer sleeve for increased rigidity.

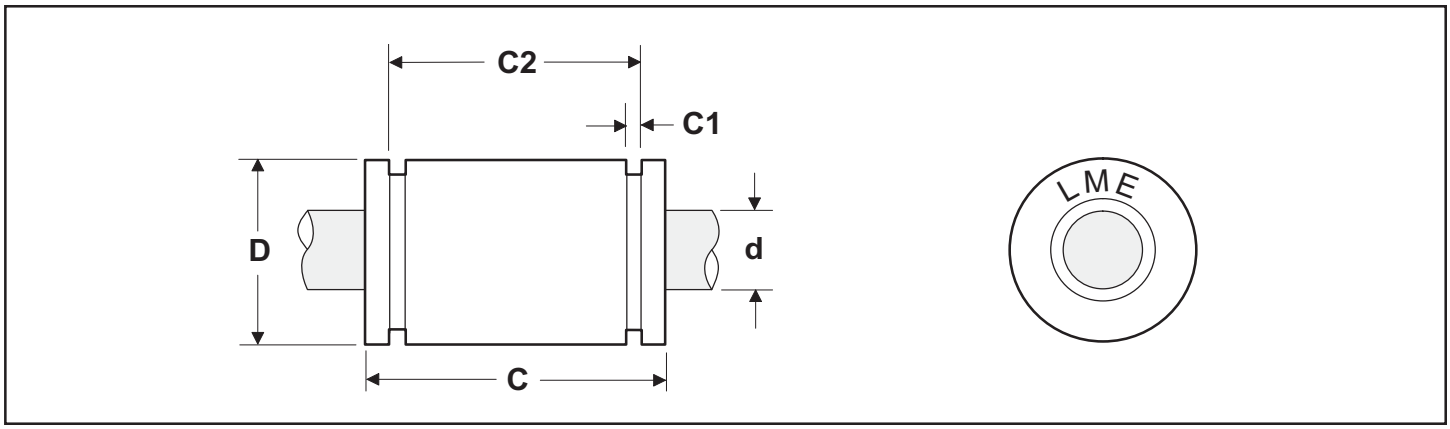

Closed Type Bearings - European Metric (ISO)

Dimensions in (mm)									
Part Number		Shaft Dia. **d (h6)**	Outside Dia. **D** (h5)	Length **C** (h12)	Retaining Ring Groove Width **C1**	Distance Between Retaining Ring Grooves **C2**	Bearing Mass (kg)	Maximum Dynamic Load Capacity C (N)(1)	Maximum Static Load Capacity C_O(N)(1)
Without Wipers	With Wipers								
LME08	LME08DD	8	16	25	1.1	16.2	0.03	160	155
LME12	LME12DD	12	22	32	1.3	22.6	0.04	330	320
LME16	LME16DD	16	26	36	1.3	24.6	0.05	800	780
LME20	LME20DD	20	32	45	1.6	31.2	0.09	1580	1570
LME25	LME25DD	25	40	58	1.85	43.7	0.19	2800	2750
LME30	LME30DD	30	47	68	1.85	51.7	0.3	3610	3550
LME40	LME40DD	40	62	80	2.15	60.3	0.6	6000	5600
LME50	LME50DD	50	75	100	2.65	77.3	1	8740	8000

1. Load ratings are based upon 100km of travel and a shaft hardness of HRC60 or more. The actual load rating is dependant upon the direction of the applied load relative to the bearing's ball track locations. See the polar charts below for appropriate derating factors.

12mm

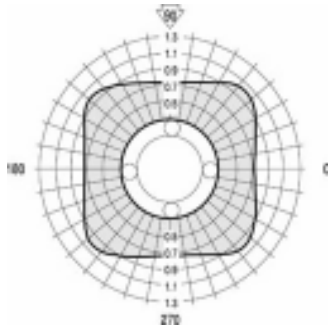

16mm

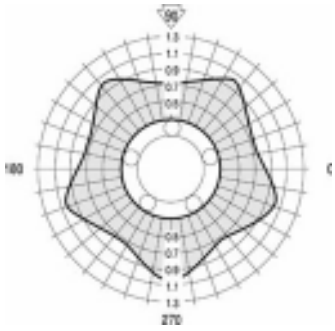

20 - 50mm

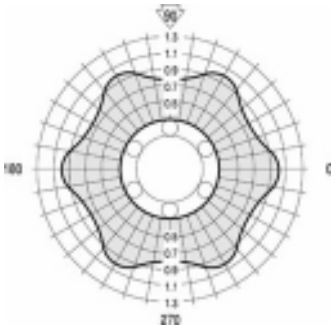

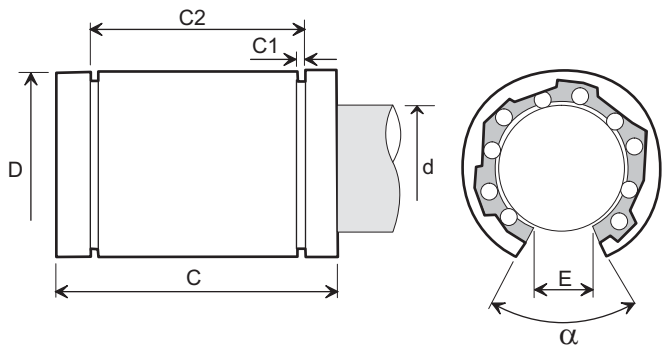

Open Type Bearings - Europenan Metric (ISO)

Dimensions in (mm)											
Part Number		Shaft Dia. **d (h6)**	Outside Dia. **D** (h5)	Length **C** (h12)	Retaining Ring Groove Width **C1**	Distance Between Retaining Ring Grooves **C2**	Bearing Mass (kg)	E	α	Maximum Dynamic Load Capacity C (N)(1)	Maximum Static Load Capacity C_o(N)(1)
Without Wipers	With Wipers										
LME12OP	LME12OPDD	12	22	32	1.3	22.6	0.04	7.5	78	400	280
LME16OP	LME16OPDD	16	26	36	1.3	24.6	0.05	10	78	550	430
LME20OP	LME20OPDD	20	32	45	1.6	31.2	0.09	10	60	1200	950
LME25OP	LME25OPDD	25	40	58	1.85	43.7	0.19	12.5	60	2200	1700
LME30OP	LME30OPDD	30	47	68	1.85	51.7	0.3	12.5	50	2800	2300
LME40OP	LME40OPDD	40	62	80	2.15	60.3	0.6	16.8	50	5200	3900

1. Load ratings are based upon 100km of travel and a shaft hardness of HRC60 or more. The published load ratings
are based upon the load being applied radially inward from the side opposite the bearing opening. For a "pull-off" load capacity, derate the above load ratings by 50%.

LME12OPN

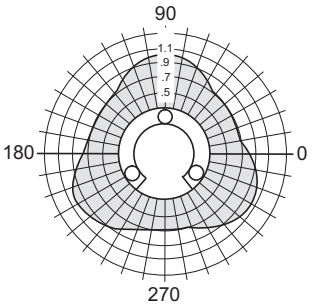

LME16OPN

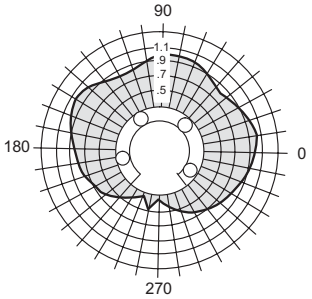

LME20 - 40OPN

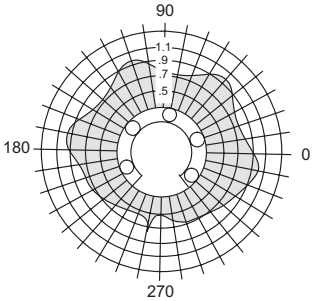

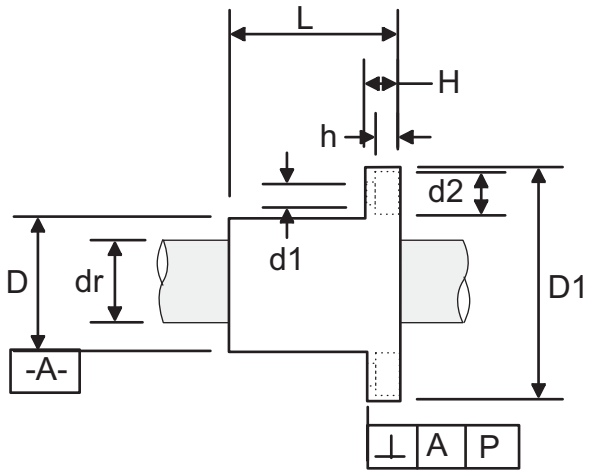

Flange Type Linear Bearing

Dimensions In mm								
Part Number			# of Ball Tracks	LMF TYPE Weight (g)	Load Ratings		Working Bore Dia.	
Circular Type	Square Type	Oval Type			Dynamic C (N)	Static Co (N)	dr (mm)	Tolerance (μm)
LMF10UU	LMK10UU		4	78	370	540	10	+0 -9
LMF12UU	LMK12UU		4	76	410	590	12	
LMF13UU	LMK13UU		4	94	500	770	13	
LMF16UU	LMK16UU	LMH16UU	5	134	770	1170	16	
LMF20UU	LMK20UU	LMH20UU	5	180	860	1370	20	+0 -10
LMF25UU	LMK25UU	LMH25UU	6	340	980	1560	25	
LMF30UU	LMK30UU	LMH30UU	6	460	1560	2740	30	
LMF40UU	LMK40UU		6	1054	2150	4010	40	+0 -12
LMF50UU	LMK50UU		6	2200	3820	7930	50	

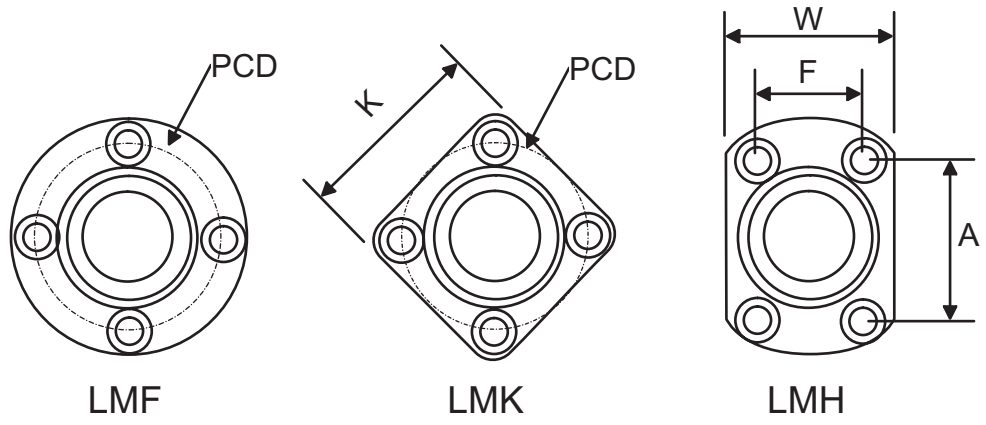

Dimensions In mm														
D		L		B		H	PCD	K	W	A	F	P	d1 x d2 x h	Part Number
(mm)	Tol (μm)	(mm)	Tol (μm)	(mm)	Tol (μm)							(μm)		
19	+0 -13	29	+0 -0.2	40	+0 -0.2	6	29	30	25	29	--	12	4.5 x 8.0 x 4.4	LMF/K/H10UU
21		30		42		6	32	32	27	32	--	12	4.5 x 8.0 x 4.4	LMF/K/H12UU
23		32		43		6	33	34	29	33	--	12	4.5 x 8.0 x 4.4	LMF/K/H13UU
28		37		48		6	38	37	34	31	22	12	4.5 x 8.0 x 4.4	LMF/K/H16UU
32	+0 -16	42		54		8	43	42	38	36	24	15	5.5 x 9.5 x 5.4	LMF/K/H20UU
40		59	+0 -0.3	62		8	51	50	46	40	32	15	5.5 x 9.5 x 5.4	LMF/K/H25UU
45		64		74		10	60	58	51	49	35	15	6.6 x 11.0 x 6.5	LMF/K/H30UU
60	+0 -19	80		96	+0 -0.3	13	78	75	--	--	--	20	9.0 x 14.0 x 8.6	LMF/K40UU
80		100		116		13	98	92	--	--	--	20	9.0 x 14.0 x 8.6	LMF/K50UU

DIAMOND CASE

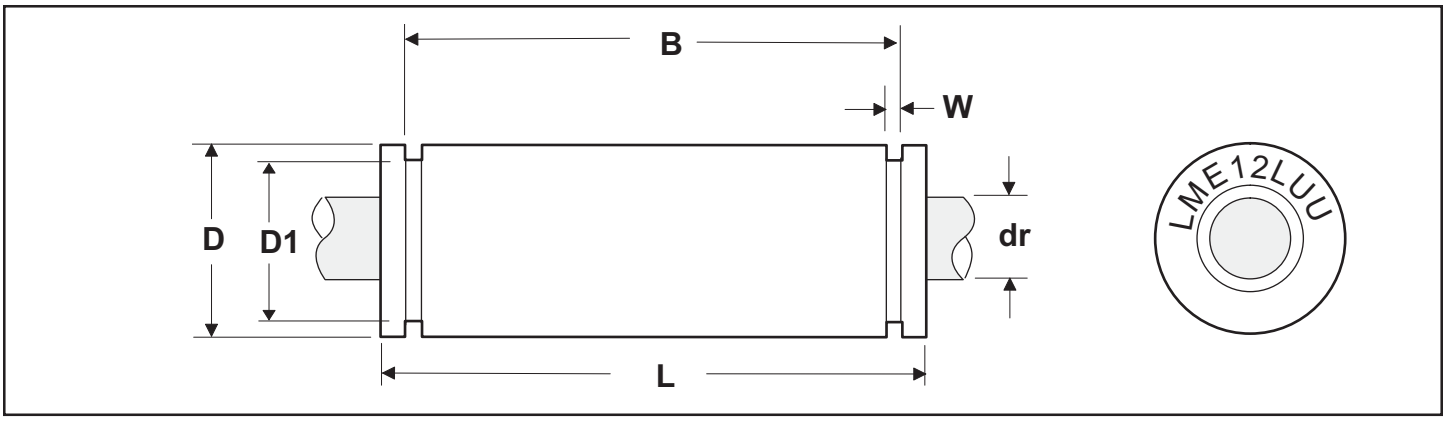

Twin Closed Type Linear Bearing

Dimensions In mm														
Part Number	# of Ball Tracks	Working Bore Dia		D		L		B		W	Dr	Weight (g)	Load Ratings	
		dr (mm)	Tol (μm)	(mm)	Tol (μm)	(mm)	Tol (μm)	(mm)	Tol (μm)				Dyn. C (N)	Static Co (N)
LM6LUU	4	6	+0 -10	12	+0 -13	35	+0 -0.3	27	+0 -0.3	1.1	11.5	16	320	520
LM8LUU	4	8		15		45		35		1.1	14.3	31	430	780
LM10LUU	4	10		119	+0 -16	55		44		1.3	18	62	580	1100
LM12LUU	4	12		21		57		46		1.3	20	80	650	1200
LM13LUU	4	13		23		61		46		1.3	22	90	810	1570
LM16LUU	5	16		28		70		53		1.6	27	145	1230	2350
LM20LUU	5	20	+0 -12	32	+0 -19	80		61		1.6	30.5	180	1400	2750
LM25LUU	6	25		40		112	+0 -0.4	82	+0 -0.4	1.85	38	440	1560	3140
LM30LUU	6	30		45		123		89		1.85	43	580	2490	5490
LM40LUU	6	40	+0 -20	60	+0 -22	154		121		2.1	57	1170	3430	8040
LME8LUU	4	8	+9 -1	16	+0/-9	45	+0 -0.3	33	+0 -0.3	1.1	15.2	31	430	780
LME12LUU	4	12		22	+0 -11	57		45.8		1.3	21	80	650	1200
LME16LUU	5	16	+11 -1	26		70		49.8		1.3	24.9	145	1230	2350
LME20LUU	5	20		32	+0 -13	80		61		1.6	30.3	180	1400	2750
LME25LUU	6	25	+13 -2	40		112	+0 -0.4	82	+0 -0.4	1.85	38	440	1560	3140
LME30LUU	6	30		47		123		104.2		1.85	44.5	580	2490	5490
LME40LUU	6	40	+16 -4	62	+0 -15	154		121.2		2.15	59	1170	3430	8040

DIAMOND CASE

Track Roller Guide

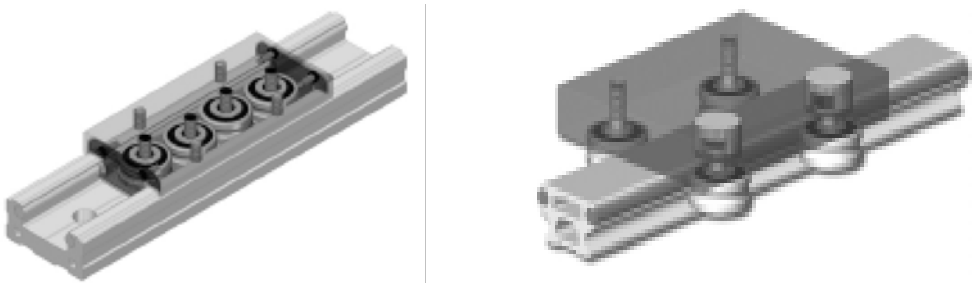

Track Roller Guides provide you with the following:

Velocity capabilities up to 10m/s to achieve maximum productivity.

Double row angular contact bearings for high load capacities in all directions.

Quiet functionality for use in areas where the noise of typical linear guides is to loud.

Preloadability to provide repeatable motion.

Maximum length up to 2meters for sizes 20 and 25 and 6 meters for sizes 32 and larger.

Extremely durable in dirty environments.

Inside Type

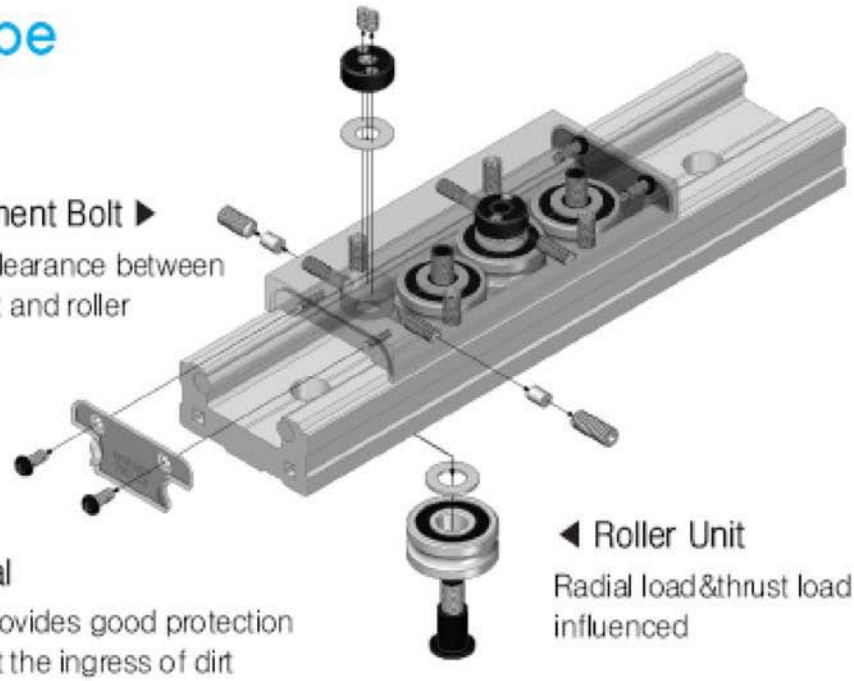

Adjustment Bolt ▶

Adjust clearance between rail shaft and roller

▲ Seal

Seal provides good protection against the ingress of dirt

◀ Roller Unit

Radial load&thrust load can be influenced

Outside Type

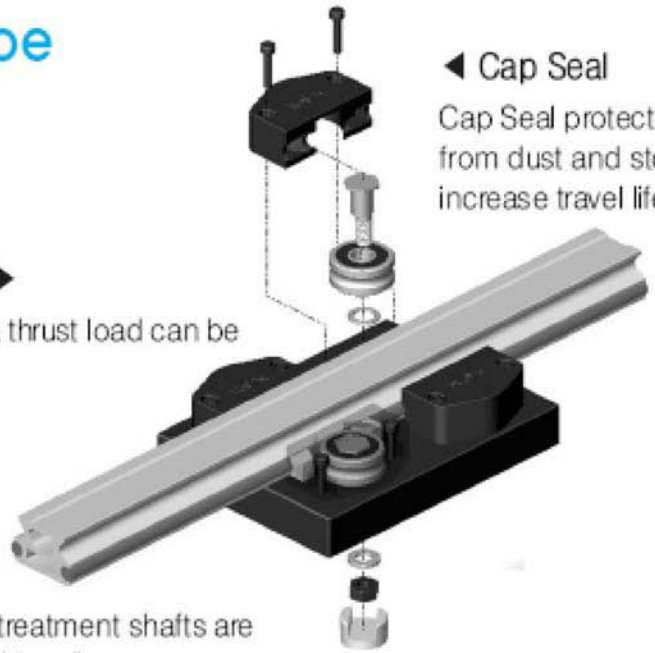

◀ Cap Seal

Cap Seal protects shafts & rollers from dust and stock oil and increase travel life and speed.

Roller Unit ▶

Radial load & thrust load can be influenced.

Guide Rail ▶

Precision & heat treatment shafts are inserted in the guide rail.

Non-Adjustable

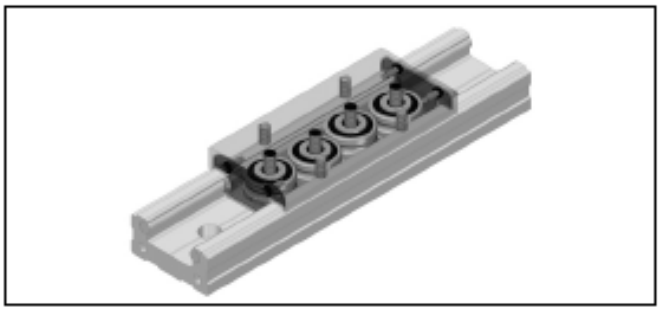

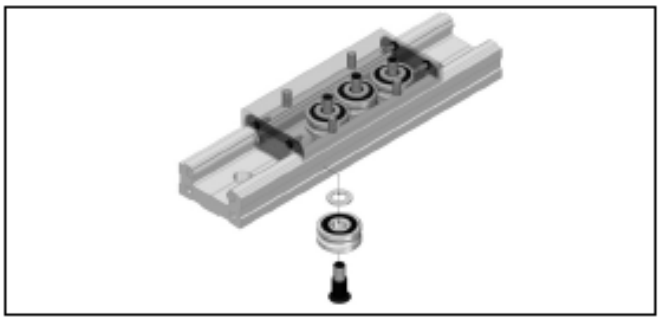

Adjustable

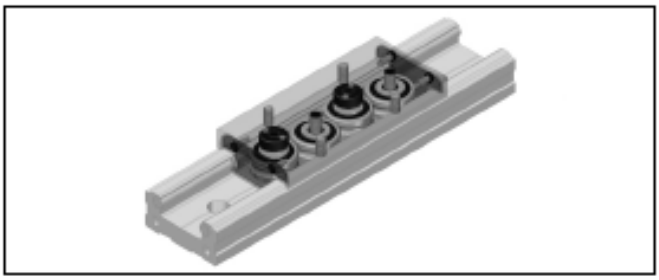

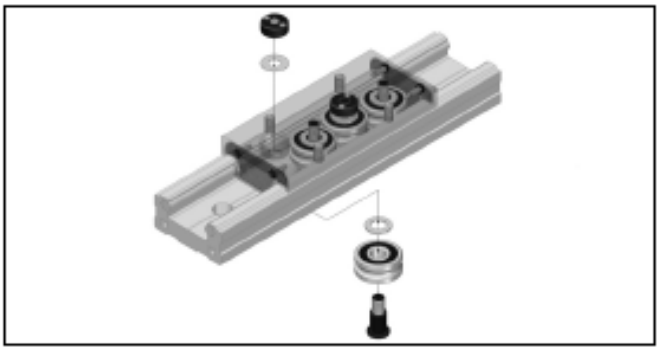

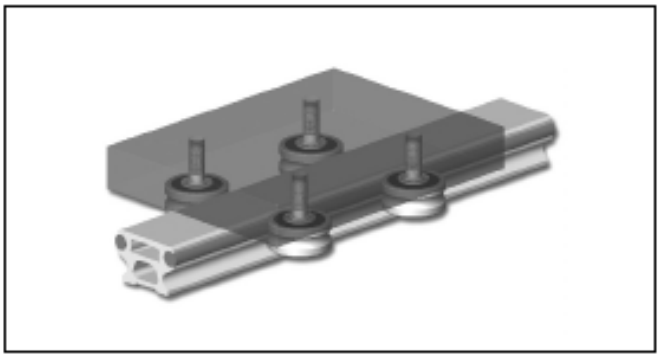

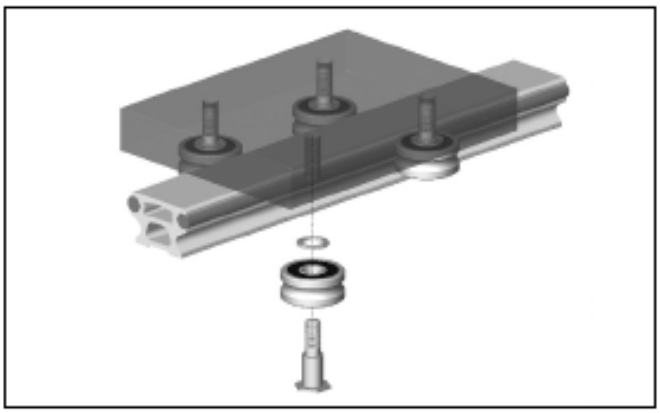

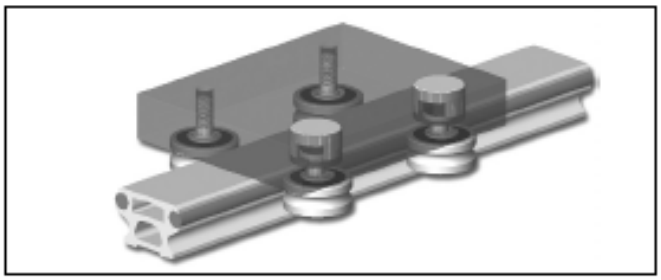

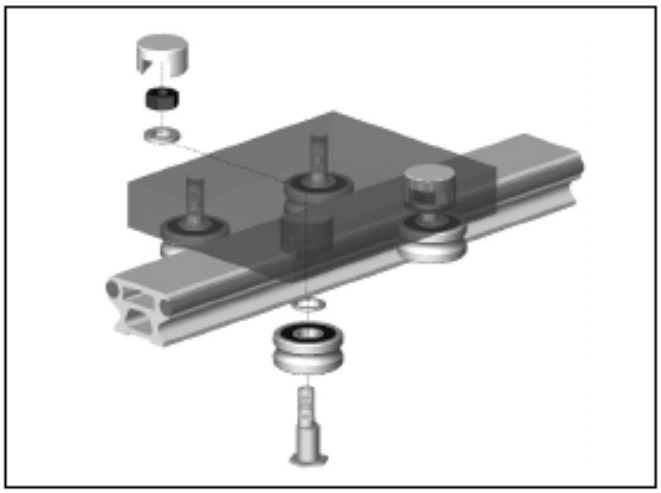

Track Roller - Inside Style

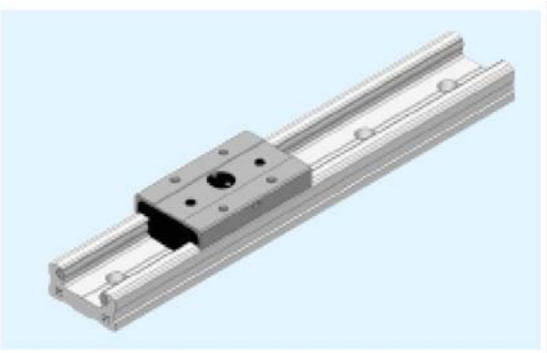

TRI	25		-	2	BC	UU	-	1300
TR Guide Internal Type	Frame Size	Length -Std. L -Long		# of blocks on rail	Block Type B -Non Adj BC -Adjustable	Seals -None U -1 end UU -2 end		Rail length in mm

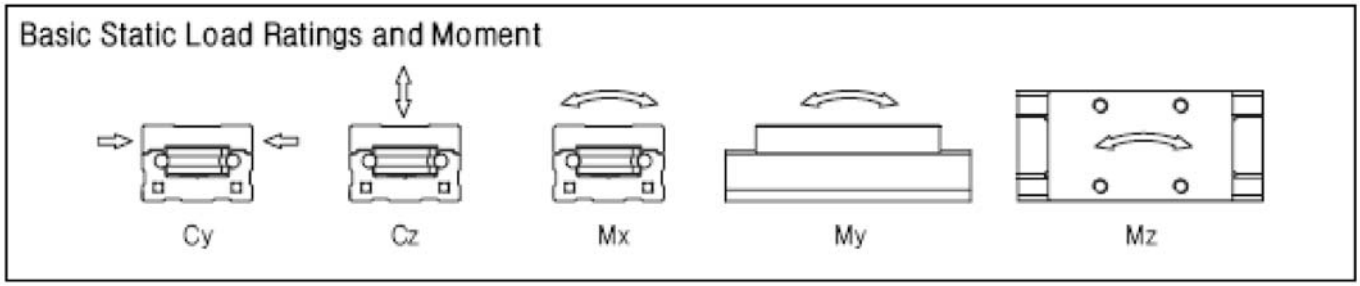

Dimensions in mm										
Part Nuber	Load Ratings				Moment Ratings					
	Cy (N)	Coy (N)	Cz (N)	Czo (N)	Mx (Nm)	Mox (Nm)	My (Nm)	Moy (Nm)	Mz (Nm)	Moz (Nm)
TRI 15	1860	1600	710	570	8.3	5.4	12.1	9.7	31.8	27.2
TRI 20	1860	1600	710	570	8.5	6.8	12.8	10.3	33.6	28.8
TRI 25	5960	4560	2330	1650	36.1	25.6	58.3	41.3	149	114
TRI 30	5960	4560	2330	1650	41.9	29.7	62.9	44.6	161	123
TRI 35	13900	10200	5410	3690	121	83.0	195	132	501	367
TRI 45	13900	10200	5410	3690	135	92.3	200	136	515	377
TRI 55	13900	10200	5410	3690	162	110	243	166	627	459

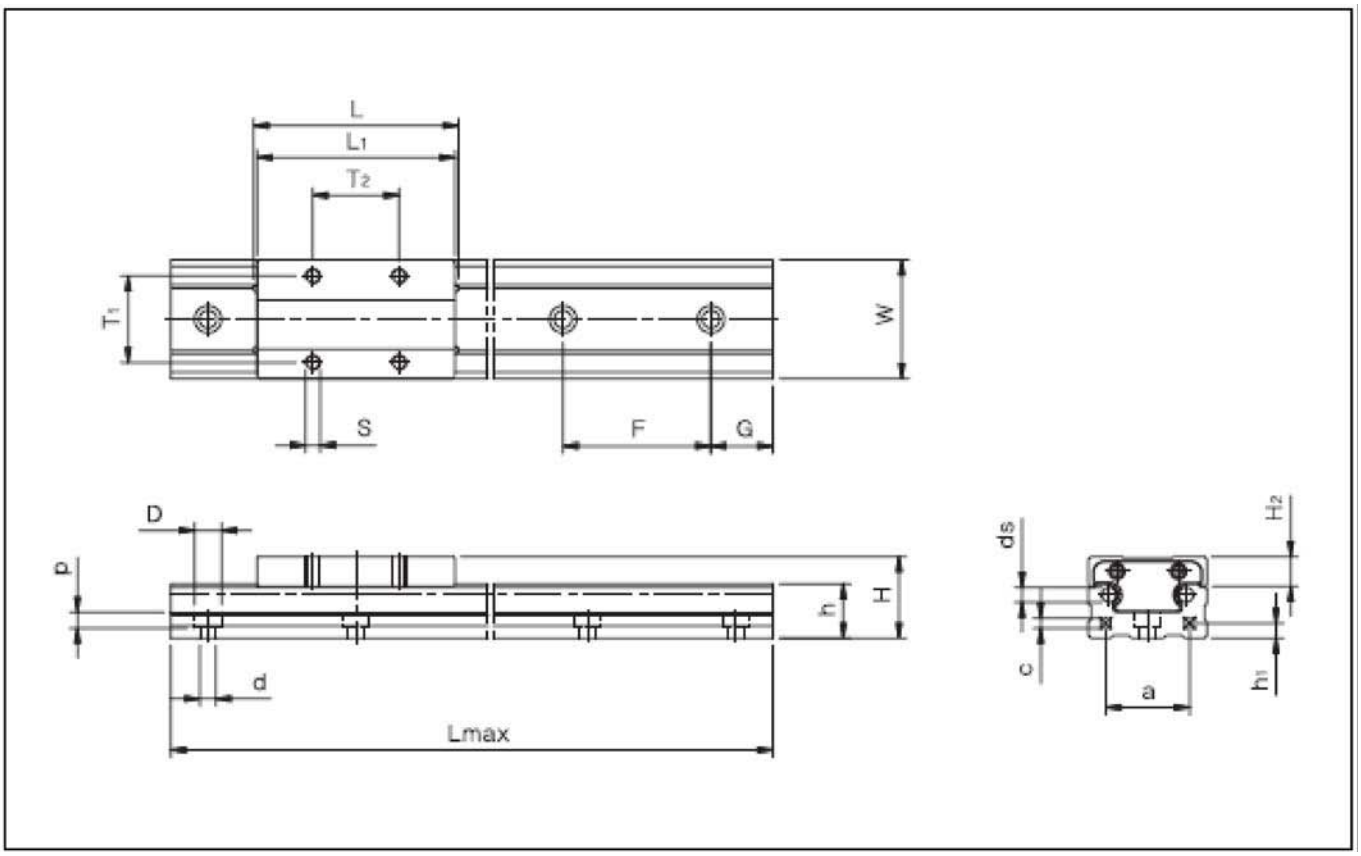

Dimensions in mm																	
Part Nuber	Assembly				Block					Rail							
	W	H	L	Lmax	L1	H2	S	T1	T2	ds	h	h1	a	c	d x D x p	G	F
TRI 15	34	24	57	6000	54.2	10.3	M4	26	26	4	14.7	4	24	3.3	4.5×8×4.5	25	60
TRI 20	42	28	66.2	6000	63.4	11.3	M5	32	32	4	17.7	5	30	3.3	5.5×9.4×5.5	25	60
TRI 25	48	33	83	6000	80.2	12	M6	35	35	6	22	6	34	4.2	6.5×11×6.5	25	60
TRI 30	60	42	96.8	6000	94	17.5	M8	40	40	6	26	7	44	5	6.5×11×6.5	35	80
TRI 35	70	48	117	6000	114.2	18.5	M8	50	50	10	31.5	8	50	6.8	9×14×9	35	80
TRI 45	86	60	126	6000	123.2	23	M10	60	60	10	39.5	12	60	6.8	11×17.5×11	50	105
TRI 55	100	68	156	6000	153.2	28	M12	75	75	12	43.5	12	70	8.5	13×20×13	50	120

DIAMOND CASE

Track Roller - Inside Style (Long)

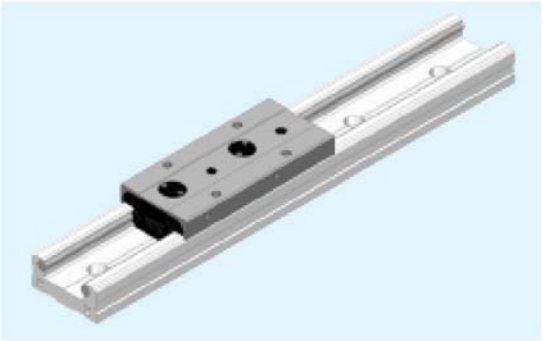

TRI	25		-	2	BC	UU	-	1300
TR Guide Internal Type	Frame Size	Length -Std. L -Long	# of blocks on rail	Block Type B -Non Adj BC -Adjustable	Seals -None U -1 end UU -2 end	Rail length in mm		

Basic Static Load Ratings and Moment

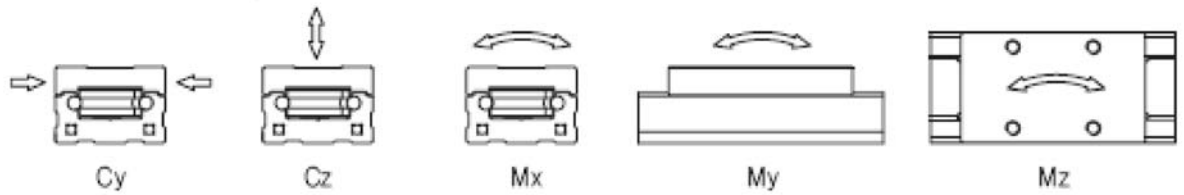

Dimensions in mm										
Part Nuber	Load Ratings				Moment Ratings					
	Cy (N)	Coy (N)	Cz (N)	Czo (N)	Mx (Nm)	Mox (Nm)	My (Nm)	Moy (Nm)	Mz (Nm)	Moz (Nm)
TRI 15 L	1860	1600	870	760	8.3	7.2	23.2	20.3	49.9	42.7
TRI 20 L	1860	1600	870	760	10.5	9.1	28.7	25.1	61.6	52.8
TRI 25 L	5960	4560	2850	2200	44.2	34.1	106	82.5	223	171
TRI 30 L	5960	4560	2850	2200	51.3	39.6	124	95.7	259	198
TRI 35 L	13900	10200	6620	4920	149	110	357	265	752	550
TRI 45 L	13900	10200	6620	4920	165	123	397	295	836	612
TRI 55 L	13900	10200	6620	4920	198	147	486	361	1024	749

Seal in the front and rear of the block protect Shaft & roller from dust, and increase the Service Life and stability of movement.

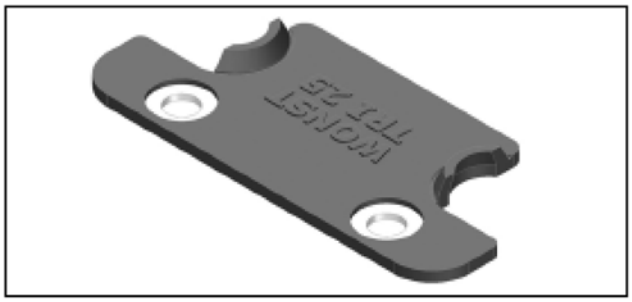

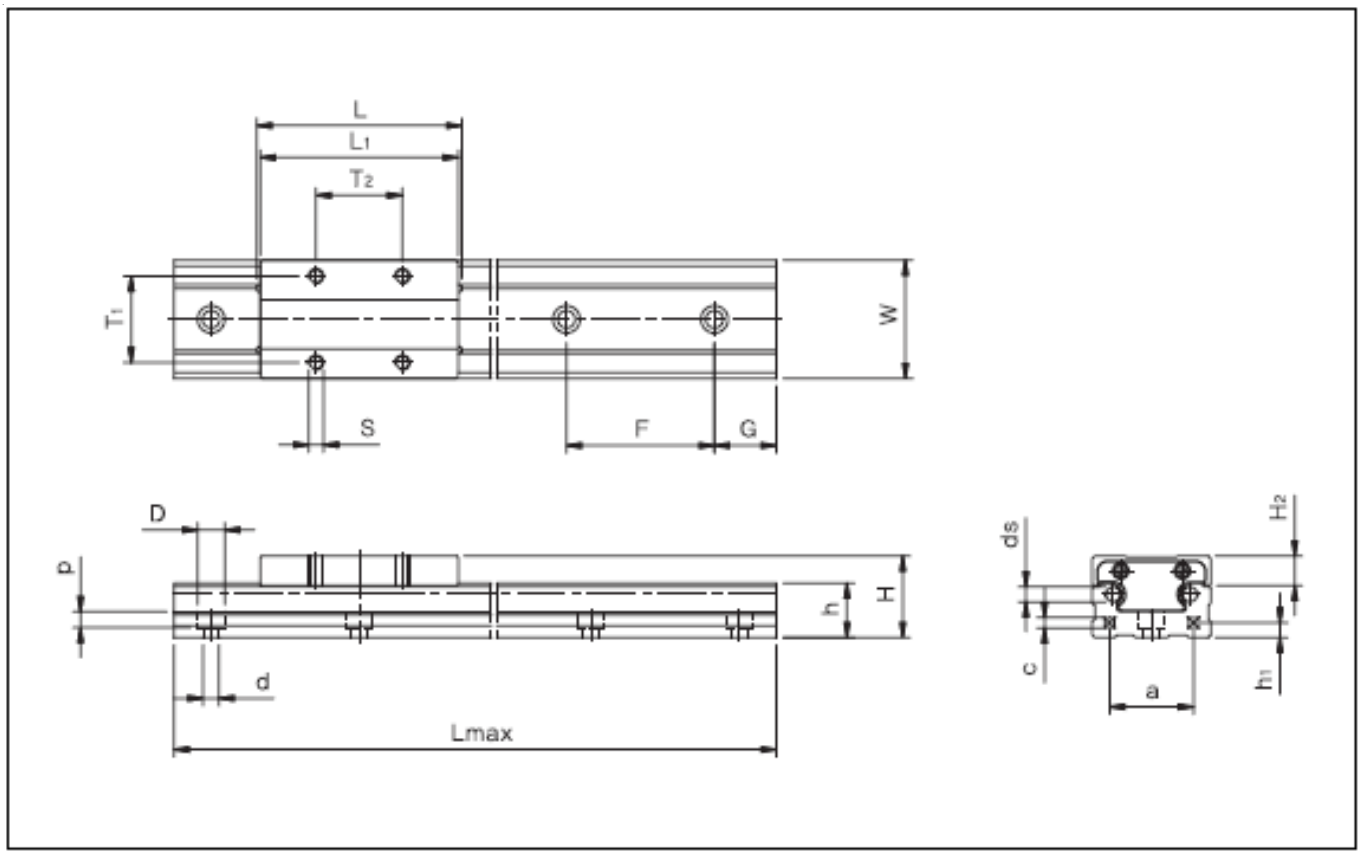

Dimensions in mm																	
Part Nuber	Assembly				Block					Rail							
	W	H	L	Lmax	L1	H2	S	T1	T2	ds	h	h1	a	c	d x D x p	G	F
TRI 15 L	34	24	79.4	6000	76.6	10.3	M4	26	34	4	14.7	4	24	3.3	4.5×8×4.5	25	60
TRI 20 L	42	28	98	6000	95.2	11.3	M5	32	50	4	17.7	5	30	3.3	5.5×9.4×5.5	25	60
TRI 25 L	48	33	109	6000	106.2	12	M6	35	50	6	22	6	34	4.2	6.5×11×6.5	25	60
TRI 30 L	60	42	131	6000	127.2	17.5	M8	40	60	6	26	7	44	5	6.5×11×6.5	35	80
TRI 35 L	70	48	152	6000	149.2	18.5	M8	50	72	10	31.5	8	50	6.8	9×14×9	35	80
TRI 45 L	86	60	174	6000	171.2	23	M10	60	80	10	39.5	12	60	6.8	11×17.5×11	50	105
TRI 55 L	100	68	213	6000	210.2	28	M12	75	95	12	43.5	12	70	8.5	13×20×13	50	120

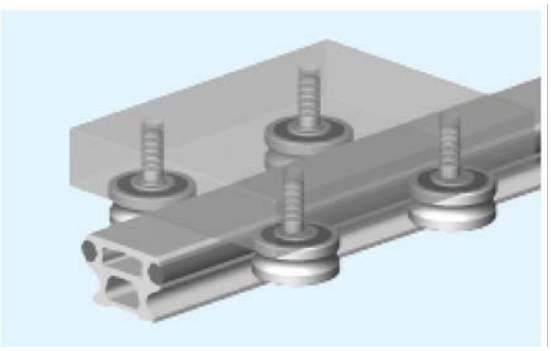

TS	25	H	-	2	BC	UU	-	1300
TR Guide External Type	Frame Size	Rail Type -Solid. H -Hollow		# of blocks on rail	Block Type B -Non Adj BC -Adjustable	Seals -None S -Sealed		Rail length in mm

Basic Static Load Ratings and Moment

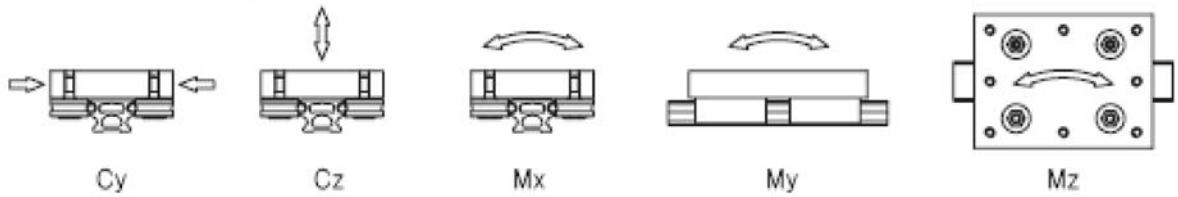

Dimensions in mm										
Part Nuber	Load Ratings				Moment Ratings					
	Cy (N)	Coy (N)	Cz (N)	Czo (N)	Mx (Nm)	Mox (Nm)	My (Nm)	Moy (Nm)	Mz (Nm)	Moz (Nm)
TS 20	1860	1600	870	760	7.0	6.1	21.8	19.0	46.7	40.0
TS 25	5960	4560	2850	2200	27.1	20.9	78.4	60.5	164.0	125.4
TS 32 H	5960	4560	2850	2200	37.1	28.6	92.6	71.5	193.8	148.2
TS 42 H	13900	10200	6620	4920	106.0	78.7	231	172	487	357
TS 52 H	13900	10200	6620	4920	139.0	103	298	221	627	459

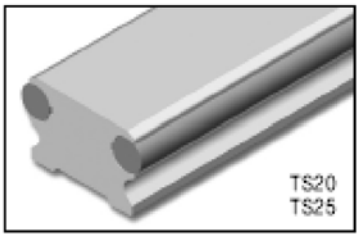

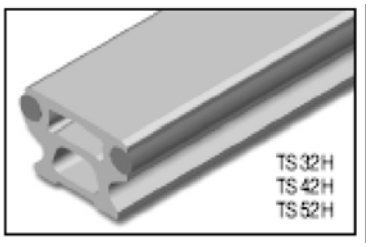

DIAMOND CASE

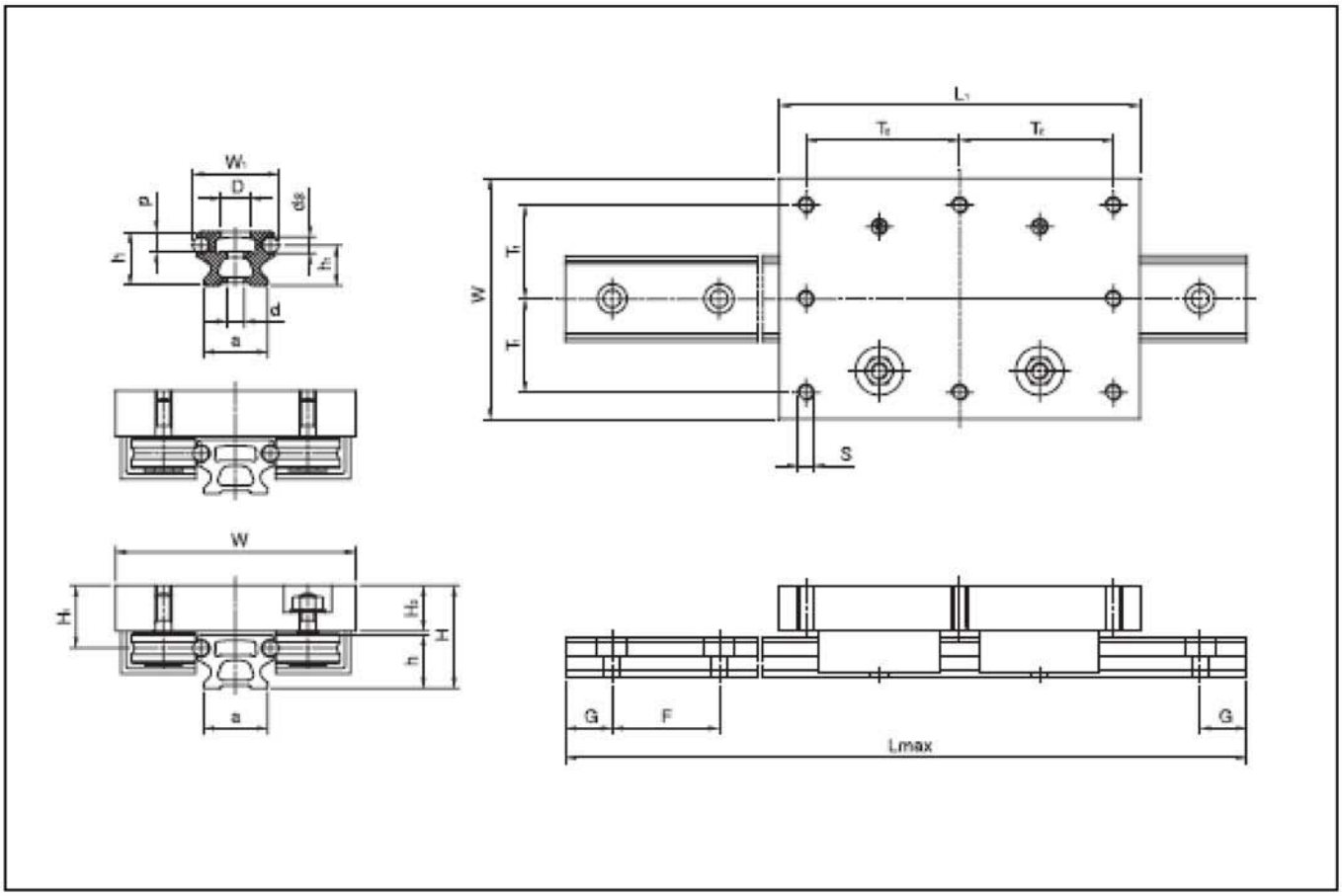

Dimensions in mm																	
Part Nuber	Assembly					Block					Rail						
	W	W1	Lmax	L1	H	H1	H2	S	T1	T2	a	ds	h	h1	d x D x p	G	F
TS 20	60	20	6000	110	25.5	16.5	12.5	M5	25.0	50	17	4	12.2	9.0	4.5×8×4.6	25	62.5
TS 25	85	25	6000	125	34.1	23.5	17.0	M6	35.0	55	21	6	15.0	10.6	5.5×10×6.5	25	62.5
TS 32 H	90	32	6000	145	38.5	23.5	17.0	M6	37.5	65	24	6	20.0	15.0	6.5×12×7.5	25	125
TS 42 H	120	42	6000	170	47.5	34.9	25.2	M8	50.0	75	28	10	20.0	12.6	9×15×8.5	25	125
TS 52 H	130	52	6000	205	60.0	34.9	25.2	M10	52.5	90	40	10	34.0	25.1	11×19×13	25	250

Cap Seal protects shafts & rollers from dust and stock oil and increase travel life and speed.

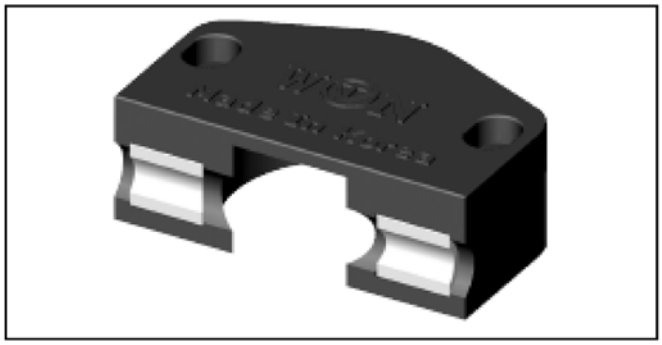

DIAMOND CASE