Dyne-A-Cam Series

Nitro-Cam®

For piercing, cutting, forming and flanging operations

Certified to ISO 9001:2008 AS9100C

APPROVED PED 97/23/EC

HYSON

Introduction **3**

Component Description **4**
Power Unit (HCPU and (HCPU-S) 4
Compact Cam (HCCU and HCCH) 5
Flange Cam (HCCF and HCCF-H) 6
Force Cylinder (HCF) 7

Function Description **8**
Normal use 8
Safety function 9
Pressure build up in the system 9
Connection of two or more Cam Units to one Power Unit 9
Parallel movement with two systems 10
Adapting the Cam stroke ratios 10

Installation Examples **11**
Application example using Compact Cam 11
Application example using Force Cylinder 11
Installations currently in operation 12

Component Selection **16**

Technical Data **23**
Capacity and performance 23
Other specifications 23
Cam Unit/Force Cylinder as a function of nitrogen pressure in the Accumulator 24

Dimensions for Power and Cam Units/Force Cylinders **25**

Size 015 (15 kN) **25**
HCPU, HCPU-S, HCCU, HCCH, HCF, HCF-SP

Size 040 (40 kN) **31**
HCPU, HCPU-S, HCCU, HCCH, HCCF, HCCF-H, HCF, HCF-SP

Size 060 (60 kN) **41**
HCPU, HCPU-S, HCCU, HCCH, HCF, HCF-SP

Size 090 (90 kN) **47**
HCPU, HCPU-S, HCCU, HCCH, HCF, HCF-SP

Size 150 (150 kN) **53**
HCPU, HCPU-S, HCCU, HCCH, HCF, HCF-SP

© Hyson Products 2013

Dimensions for Accessories. 59
Sensor kit, option for Compact Cam, HCCU and HCCH..... 59
Security Block, according to CNOMO-Standard..... 60
System hoses..... 61
Distribution Block for Nitro-Cam 69
System adapters..... 70
Designing your hosed system... 71
Hosed systems for control units and oil bleeding 73
Pump Unit 77
EHC Electrical Pump Unit... 78

Installation and Service 79
Guidelines 79

Installation 80
Power Unit 80
Compact Cam 81
Flange Cam installation possibilities 81
Flange Cam force direction and location..... 81
Force Cylinder 82
Hydraulic hoses and adapters..... 82

Proper Use and Maintenance 83
Gas charging for Force Cylinder and Accumulator 83
Oil filling and bleeding 84
Changing the oil 87
Pump Unit 87

Service and Maintenance 88
Power Unit and Force Cylinder (HCPU, HCPU-S, HCF) 88
Compact Cam (HCCU)/Flange Cam (HCCF)..... 88
Compact Cam (HCCH)/Flange Cam (HCCF-H) 89
Troubleshooting..... 90

Notes 91

 © Hyson Products 2013

Introduction

The Nitro-Cam is an ideal system for delivering force to pierce, flange, form or trim. This unit can be easily mounted in a die at virtually any angle or position, providing the greatest flexibility of any other cam product on the market today. Nitro-Cam systems come equipped with a built-in safety overload protection, preventing damage to die components in the event an obstruction blocks the cam from its full travel, and resets without assistance.

Compact cam units or force cylinders can be coupled together, allowing for multiple operations within the same tool, performed simultaneously, and often providing the ability to produce a part with fewer tools. Nitro-Cam is easily retrofitted in existing dies when changes in engineering require additional holes or operations.

A basic Nitro-Cam system consists of a power unit and a compact cam unit or force cylinder connected with a hydraulic hose. The power unit can be conveniently positioned away from the work area to avoid interference with part movements and transfer mechanisms. A power cylinder and accumulator make up the power unit, which supplies the force to the compact cam unit. This is done by means of hydraulic oil, backed up with a nitrogen gas charge in the accumulator. As the driver strokes the power cylinder, oil moves to the compact cam unit allowing it to extend and perform its task. Compressed nitrogen gas provides the return force to reset the system.

Different types of cam units and force cylinders are available to suit almost any application.

For more information, contact your local Hyson sales representative or see www.hysonproducts.com.

Features	Benefits
Simplified tool design	Reduced tool costs
Flanging and piercing operations can easily be performed in the same tool	Reduces the number of tools required to produce a part, lowering costs
Retrofittable in existing dies to add operations or simplify engineering changes	Lowers cost, eliminating the need for new tools
The power unit can be mounted lower than the cam, up to six feet away and even upside-down	Increases mounting options and simplifies installation and retrofits, adding unique versatility available only with Nitro-Cam
Compact cam units and force cylinders can be mounted at any angle in the die	Increases installation possibilities
Cam units can and should be mounted perpendicular to the panel when piercing	Increases produced part quality and increases life of the punches
One power unit can drive up to three cams	Lowers initial investment and increases installation options
Even force distribution is possible within the tool due to flexibility of power unit location	Reduces wear and press damage
Oil flow routes to the accumulator on the power unit in the event that the cam is unable to stroke due to an obstruction	This built in safety feature prevents over-pressurization of the cam
The force of the compact cam unit or force cylinder can be controlled by adjusting the nitrogen gas pressure in the accumulator	Controllable piercing and forming force
Self-contained gas spring(s) provide the return force	Return force is controllable by adjusting the nitrogen gas pressure, adding flexibility
Nitrogen fill port on the accumulator and return gas spring on the compact cam are easily accessible	Easy to service for both recharging and rebuilding
Maximum charge pressure is 180 Bar (2610 psi)	Lower and safer system pressure than competitive units
Built-in internal mechanical stop on the compact cam units and force cylinders for exact cam stroke	Simplifies installation

© Hyson Products 2013

Component Description

Power Unit (HCPU)

The power unit consists of an accumulator (1), power cylinder (2), and a base plate (3). The purpose of the accumulator is to set the force of the cam and to prevent over-pressurization of the system. It will also contain some oil once the cam has reached its stop position.

When the piston of the power unit is actuated by the press or machine, the cam units will be extended.

The size of the power unit is calculated from the number of cam units in the system, their sizes, and their stroke lengths.

Note that the piston (4) of the power cylinder is at the same height as the accumulator when the system is completely filled with oil.

The stroke lengths available are -35, -60, -110, and -160. Ten extra millimeters are included for the accumulator stroke.

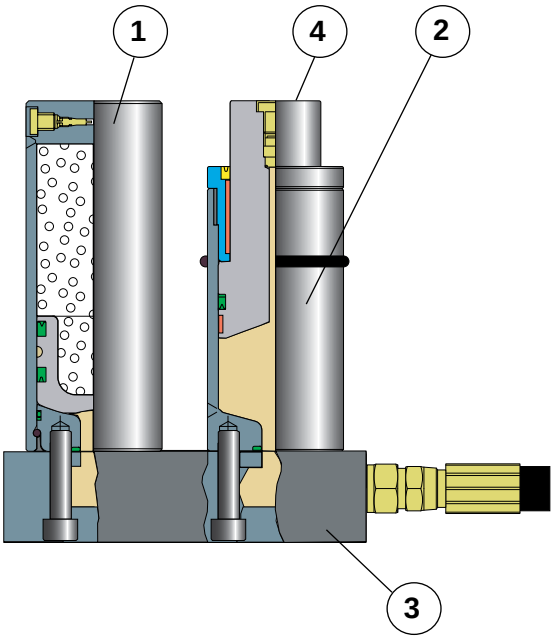

Power Unit (HCPU-S)

When there are space restrictions within the tool, the power unit is available with a separated power cylinder and accumulator.

Note that both the power cylinder and the accumulator must be used together for proper, safe function. See page 25-58 "Dimensions for Power and Cam Units/Force Cylinders".

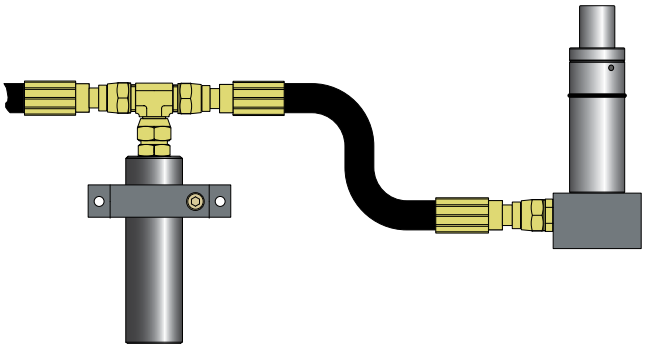

Mounting Orientation

Both HCPU and HCPU-S power units can be mounted at any angle and orientation which best fits the tool.

Alternative Driver

It is also possible to use an electrically powered hydraulic pump unit (EHC) to drive the Cam Units. See page 78.

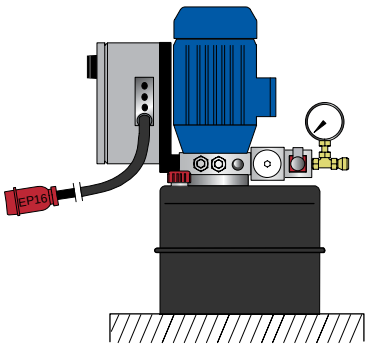

1-800-876-4976 • 440-526-5900 • FAX: 440-526-6807 • www.hysonproducts.com
© Hyson Products 2013

Compact Cam (HCCU)

The compact cam is a weil guided unit, suited for normal piercing operations, able to withstand a small amount of side loading.

It consists of a piston rod (1), guide (2), sleeve (3), front housing (4), rear housing (5), bleed nipple (6), gas spring (7), anti-rotation rods (8), and a punch adapter plate (9) for punch mounting.

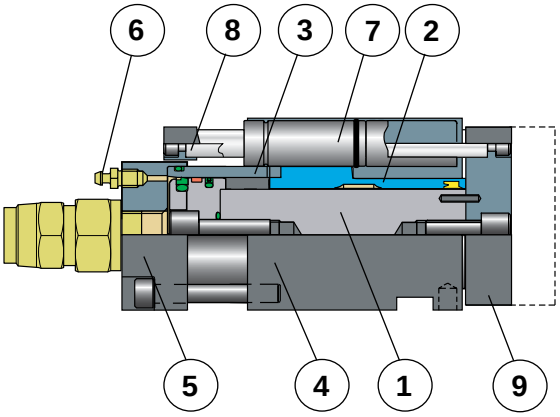

The power unit (HCPU) or hydraulic pump unit (EHC) can be used to actuate the compact cam. The cam return force is provided by one or two internally installed gas springs. The punch adapter plate is held in place by the two anti-rotation rods.

The use of a polyurethane stripper is recommended in piercing and cutting operations to hold the panel down and to strip the punch from the panel.

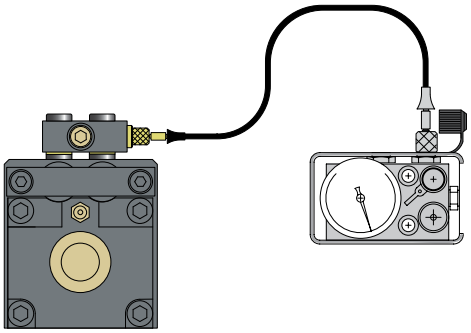

Compact Cam (HCCH) for a Hosed System

The compact cam is also available in a version where the gas springs in the unit can be hosed to a control panel. This way the gas pressure in the spring can be monitored from outside of the tool.

Option for HCCU and HCCH

A complete kit with proximity sensors (1), fittings, screws, etc. can be fitted to the compact cams so that the extended and retracted positions can be monitored.

See page 25-58 "Dimensions for Power and Cam Units/Force Cylinders".

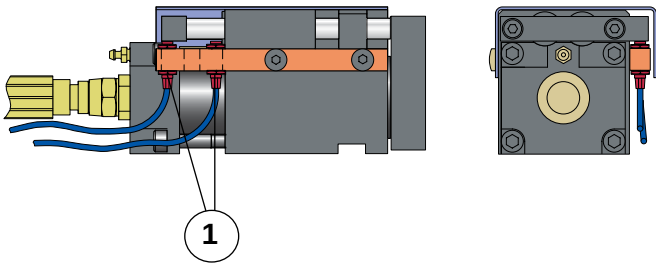

Flange Cam (HCCF)

The flange cam is suitable for flanging and other operations with large amounts of side load.

No extra guides are required as the front adapter plate (1) is equipped with two roller bearings (2).

A compact cam unit (3) is used as a driver and a bottom plate (4) provides support for the front adapter plate.

The power unit will actuate the flange cam and the return movement is provided by two internally installed gas springs.

The front adapter plate includes threaded holes to mount any customized flanging tool.

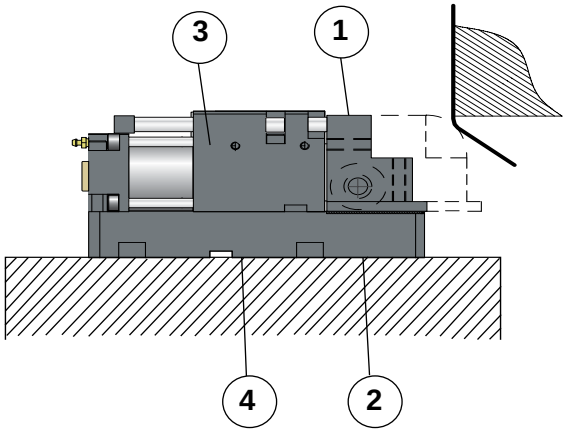

Flange Cam (HCCF-H) for Hosed System

The flange cam is also available in a version where the gas springs in the unit can be hosed to a control panel. This way the gas pressure in the spring can be monitored from outside the tool. See page 25-58 "Dimensions for Power and Cam Units/Force Cylinders".

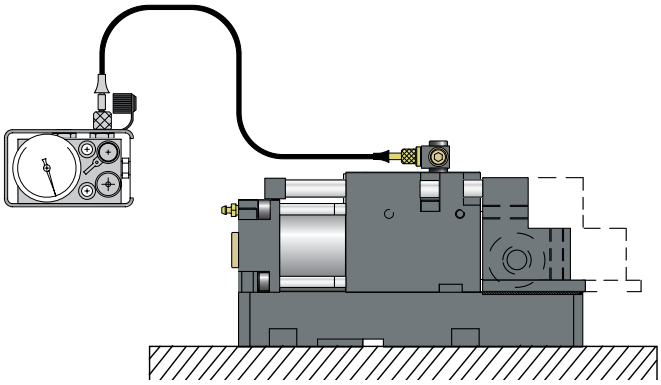

Flange Cam Spacers (optional)

The spacers (1) are required when mounting the flange cam from above (top mount) as shown here.

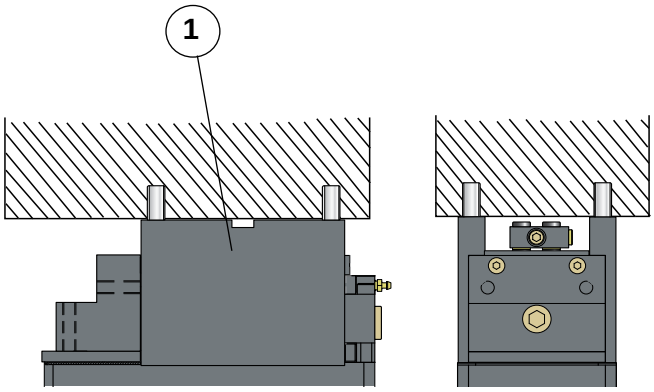

1-800-876-4976 • 440-526-5900 • FAX: 440-526-6807 • www.hysonproducts.com
© Hyson Products 2013

Force Cylinder (HCF)

The force cylinder is suitable for forward and return motion of, for example a flanging steel or forming punch used for various operations in the tool. Note that it is not possible to mount a punch directly onto the piston rod without a guide in the tool.

The force cylinder consists of a cylinder (1), piston rod (2), guide (3), gas charge port (4), nitrogen gas for return (5) and a bleed nipple (6).

The power unit (HCPU) or electrical pump unit (EHC) can be used to actuate the force cylinder. The return force is provided by the internal nitrogen pressure within the force cylinder. The force cylinder can be mounted using different types of flanges.

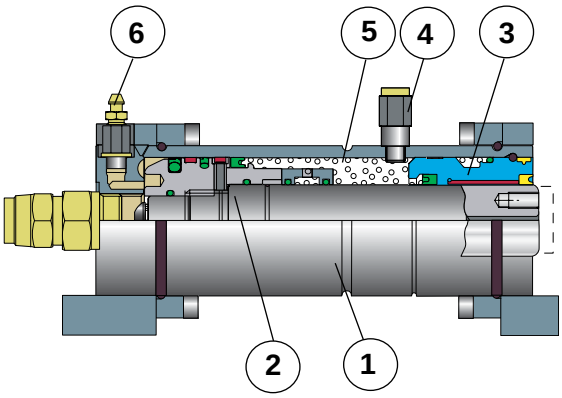

External stops (7) are recommended for the tool (5-10 mm above cylinder) to avoid damage to the cylinder during the return stroke.

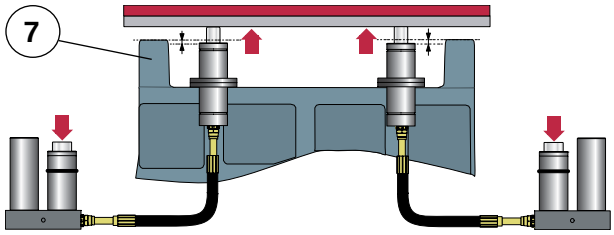

Function Description

Normal Use

The illustration below shows the power unit (HCPU) and the compact cam (HCCU). The system works identically for a compact cam (HCCU), flange cam (HCCF), or a force cylinder (HCF).

Before the press (or machine) activates the power unit, there is no oil pressure, but the accumulator and the return gas springs in the cam (or force cylinder) are charged with nitrogen (1). When the press strikes the piston in the power unit (2), the cam will be actuated and the operation will begin.

Prior to bottom of press stroke, the cam (or force cylinder) is fully extended (1) and the piston in the accumulator rises (4) providing force. When the press returns upwards, the movable parts will return to their original positions due to the return gas springs in the cam (or nitrogen pressure in the force cylinder) and accumulator.

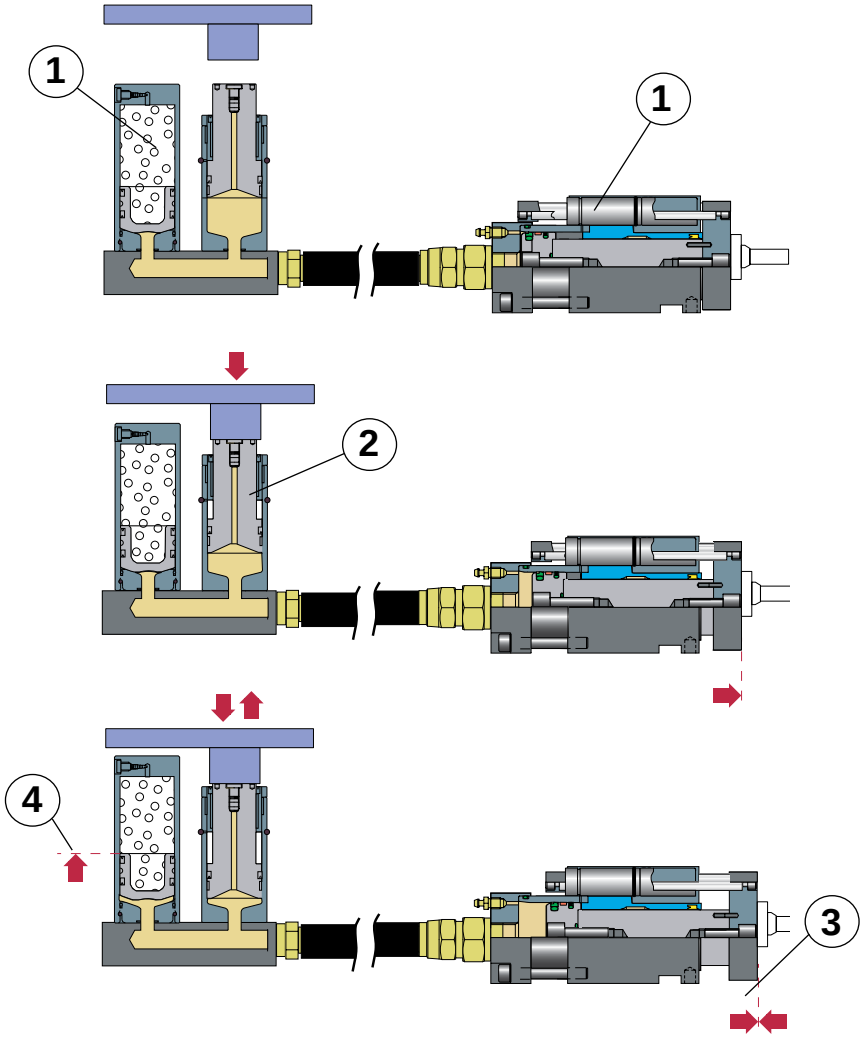

1-800-876-4976 • 440-526-5900 • FAX: 440-526-6807 • www.hysonproducts.com
© Hyson Products 2013

Safety Function

If the movement of the cam is restricted in the tool (1), the piston in the accumulator will be raised instead (2). The oil moves into the accumulator to prevent over-pressurization of the system.

When the restriction has been removed, the unit will function normally without needing to be refilled with oil or manually reset.

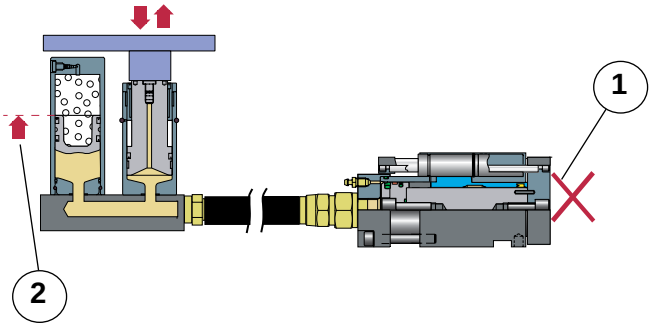

Pressure Build-up in the System

Before the power unit is activated, there is no oil pressure (1).

The force from the gas pressure in the cam unit causes the oil pressure to increase (2). The oil pressure will increase to create enough force needed to perform the operation (3).

When the cam reaches its stop position, the oil pressure increases to lift the piston in the accumulator with a force equal to the nitrogen pressure (4) within the accumulator.

If the movement of the cam is restricted, the oil pressure will follow curve (5).

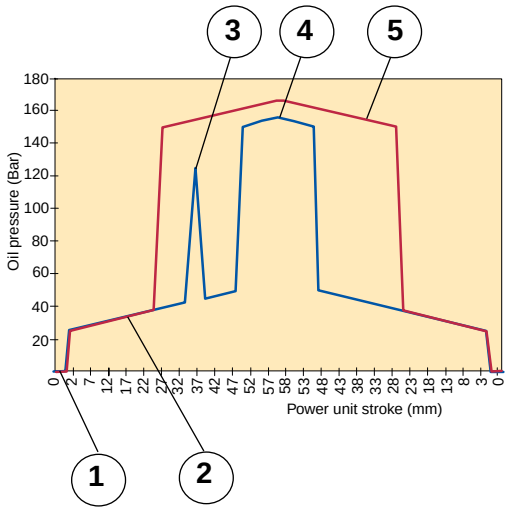

Connection of Two or More Cam Units to one Power Unit

It is possible to connect up to three cam units to one power unit. Note that the movements of the cams during the stroke are not synchronized (1) until the cams are in the fully extended position (2).

If more than three cams are connected to one power unit, the velocity in some of the cams could be too high. The system could also be difficult to bleed, therefore is not recommended.

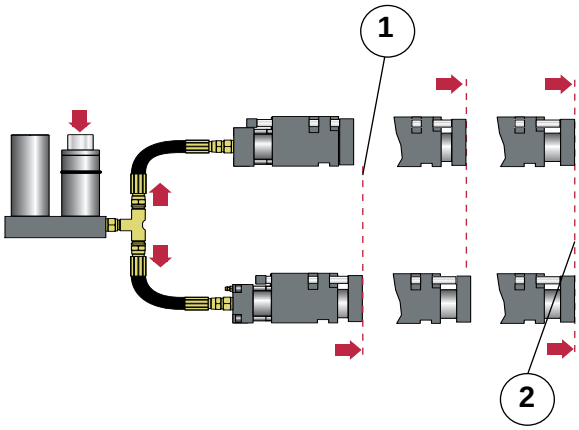

Parallel Movements with Two Systems

For parallel movements where different forces may be required (for example, in order to move large pads in tools), using two separate systems is recommended.

Here the movement of each force cylinder is synchronized regardless of the individual force required by each force cylinder.

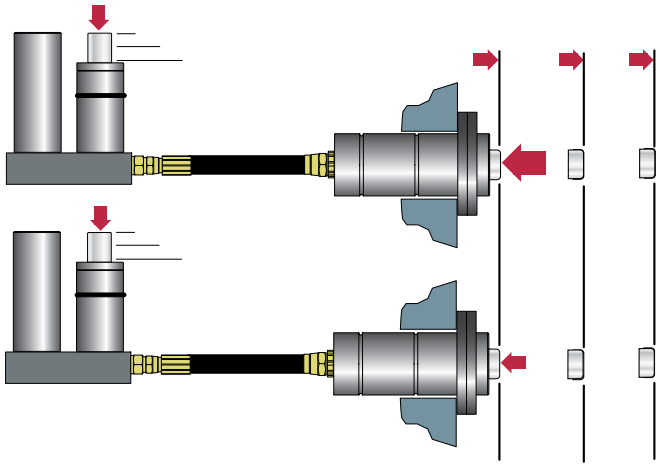

Adapting Cam Stroke Ratios

If you use a large power unit (eg. HCPU-40) connected to a small cam unit (eg. HCCU-15), the speed of the cam unit will increase in relation to the speed of the press.

The difference in speeds is related to the speed difference in the piston area. The speed of the cam units will be faster than the speed of the press (1).

($S_{Press} < S_{Cam\ Unit}$)

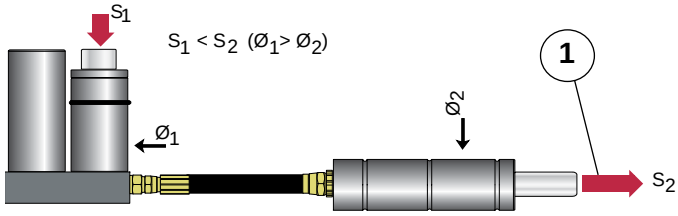

The opposite is also possible using a smaller power unit. With a larger cam the press speed will be faster than the speed of the cam (2).

($S_{Press} > S_{Cam\ Unit}$)

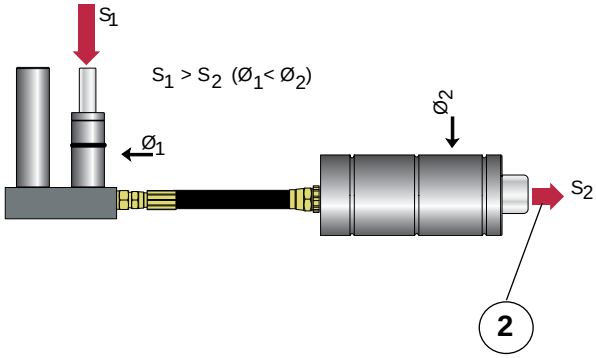

It is important that the velocity of the cam does not exceed the specifications on page 23 "Technical data" See also page 16 "Component selection" step 5.

1-800-876-4976 • 440-526-5900 • FAX: 440-526-6807 • www.hysonproducts.com
© Hyson Products 2013

Installation Examples

Application example using the Compact Cam

This example shows how a compact cam (1) can be used for piercing. The punch can be attached directly to the cam unit and no additional guides are required in the tool. As seen in the picture, the power unit (4) can be placed remotely from the cam unit. This gives increased flexibility compared to a conventional mechanical solution. A stripper (2) on the punch is recommended.

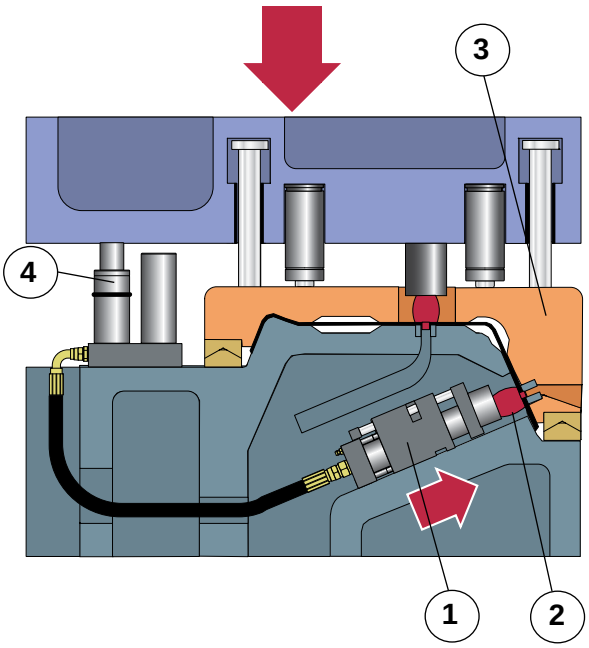

Work cycle
As the upper tool moves downwards, the blank holder (3) actuates and keeps the blank in position. Note the blank holder is guided relative to the lower die.

When the blank holder is in position, the power unit (4) will be activated and the cam unit will perform the punch operation

Note that the power unit can be mounted at any location and orientation to the cam unit/ force cylinder and not just as depicted in these examples.

Application example using the Force Cylinder

This example shows how one or more force cylinders (1) can be used to drive forming punches (2) (or cam slides) in a tool. The punch (or slide) is guided in the tool. This method of driving tool 'components' allows for high flexibility in tool design. The force cylinder supplies the motion and force. Only pulling and pushing forces are possible.

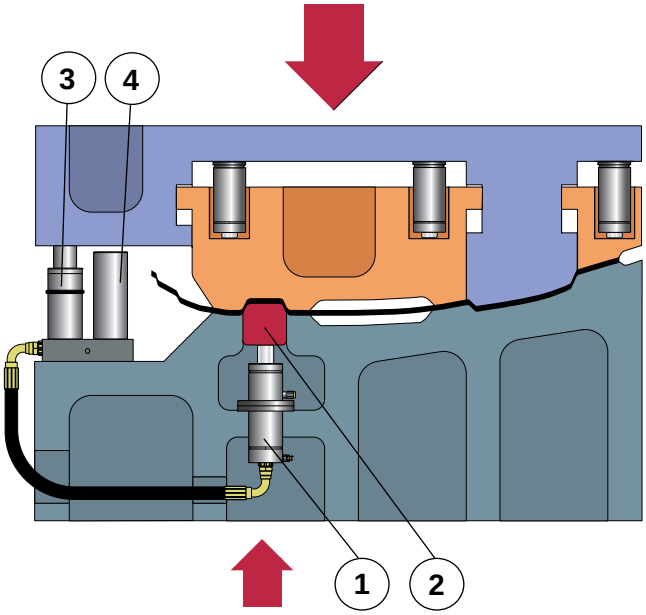

Work cycle
As the upper tool moves downwards, the blank holder actuates and keeps the blank in position. When the blank holder is in position, the power cylinder actuates, thus actuating the force cylinder.

The forming force can be adjusted by simply changing the pressure in the accumulator (4).

Installations Currently in Operation

The following examples are of installations now running in production, illustrating the benefits of the Nitro-Cam in various applications.

Example 1, Piercing

Twelve holes are being pierced at an upward angle (1). In this tool, a mechanically driven pad (2) has been equipped with Nitro-Cams.

During the first part of the operation the pad moves into position, using the angled part of the drivers (3). Once the pad is in position, the drivers begin to dwell, holding the pad in position. Then the power units are activated and the holes are punched by the compact cams (4).

Using this solution, punching operations can be easily carried out perpendicularly to the blank, while the power unit is actuated away from the compact cam.

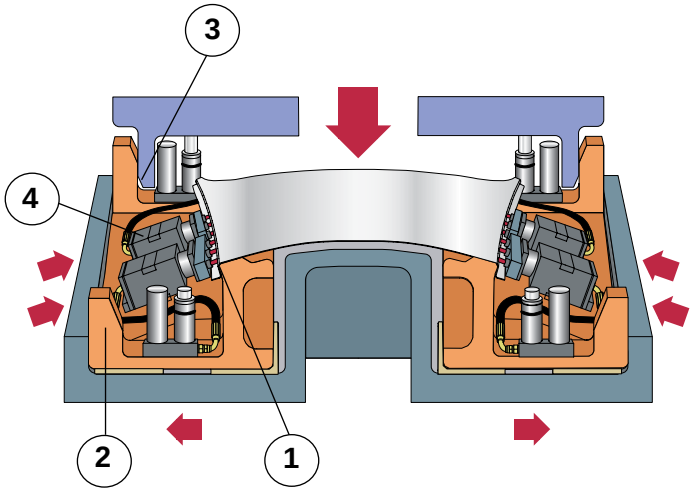

Example 2, Piercing

Six holes are being punched at an upward angle using force cylinders activating a pivoting piercing unit (1).

The picture shows the unit in its extended position (press at bottom dead center). As the force cylinder (2) starts to move backwards, the punch retracts from the hole and thereafter the whole unit will pivot down, allowing for the part to be removed. The reverse will happen as the press moves back down.

There are two systems in the tool; one on the left side, one on the right. Each system consists of one power unit (3) driving three force cylinders.

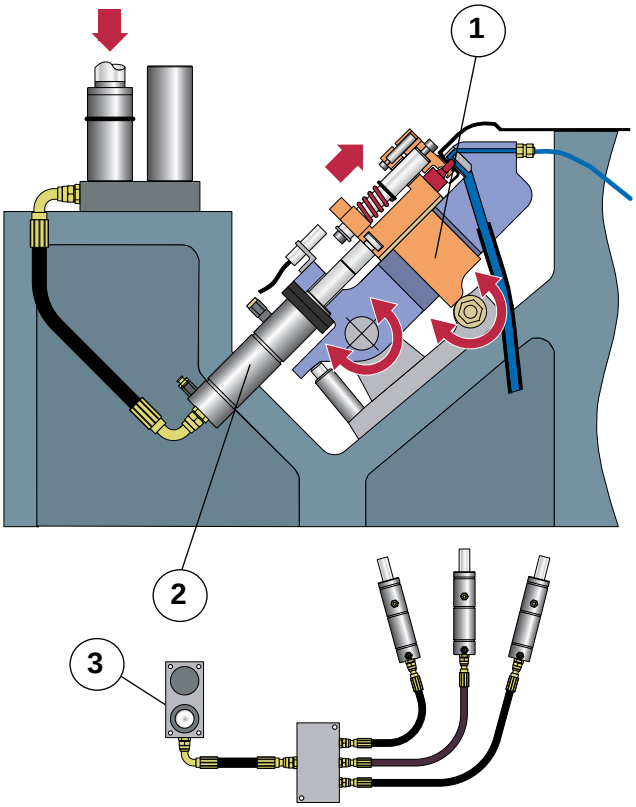

1-800-876-4976 • 440-526-5900 • FAX: 440-526-6807 • www.hysonproducts.com
© Hyson Products 2013

Example 3, Piercing Two Holes in Two Parts

In this tool, two parts are being produced simultaneously. The left part of the picture shows the press at its upper position. The right part shows the press in its bottom position. Shown above the cam units are the transfer arms.

Before the cam units are activated, a smaller size cam unit is connected to a larger size power unit in order to allow the flange of the part to pass the punches. In this case, a HCCU-15 (1) is connected to a HCPU-40 (2). This will give a stroke ratio of 2.5. (As the press/power unit moves 10 mm vertically, the cam unit will move 25 mm horizontally).

Two versions of the same part are produced; one with holes, one without. For the part without holes, the power unit driver is simply removed from the tool, thus disabling the cam units from making the holes.

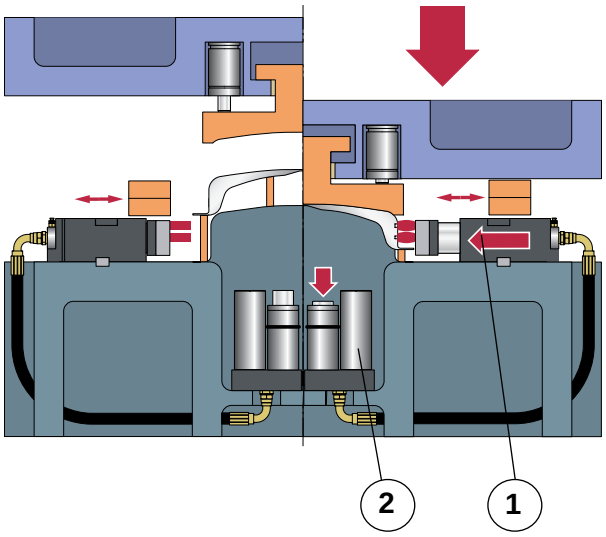

Example 4, Piercing

This application uses a hydraulic cam system mounted upside-down in the upper tool. The cam unit (1) is mounted on a floating die (2). The floating die is centered relative to the lower die using conical pillars and the die is backed up by springs. As the press moves downwards, and the floating die is centered, the power unit (3) is activated and the holes are punched.

Prior to the installation of the hydraulic cam system, the holes were being punched at a vertical angle using oval-shaped punches.

The production and quality enhancements of the parts formed with the Nitro-Cam, resulted in a payback time of three months for the entire system, including installation.

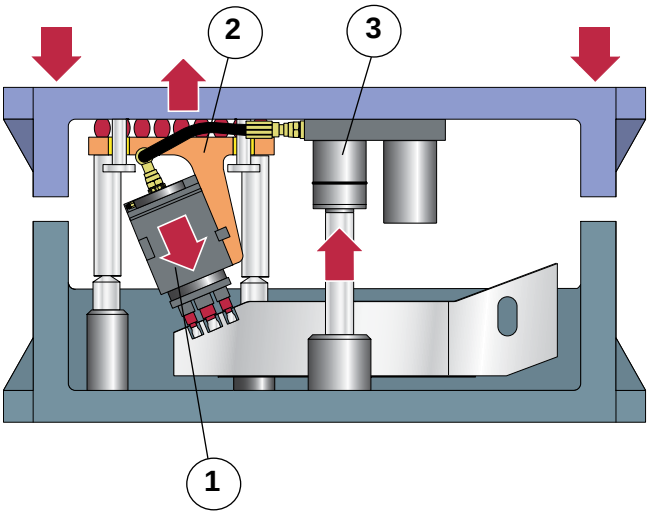

Example 5, Flanging

This picture shows a floor panel where flange cam units (1) are being used for flanging upwards (2). All side loading forces associated with the flanging operation are taken up within the flange cam units.

In this case, the customer saves the cost of one complete tool by using the Nitro-Cam, as these operations could be added to an existing tool. The other option would have been to produce a completely new tool with a floating pad.

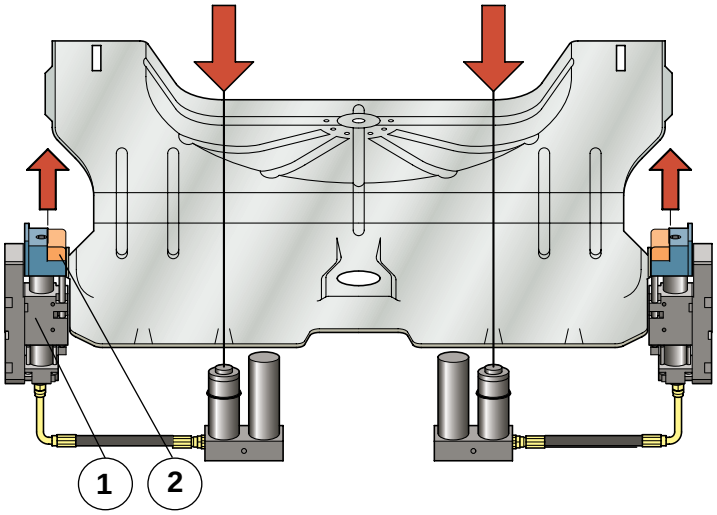

Example 6, Flanging a wide edge

In this tool, two force cylinders are being used to drive an 800 mm-wide flanging steel. As seen in the picture, the flanging (1) is carried out at an angle opposite to the direction of the press motion.

To ensure a parallel movement at both ends of the flanging steel, two separate cam systems are being used. Each system contains a power unit (2) and a force cylinder (3).

The flanging steel (4) is weil guided in the tool and the force cylinders are only subject to axial forces. Using the Nitro-Cam has simplified the design of the tool, therefore reduced the tooling cost. See examples on page 20

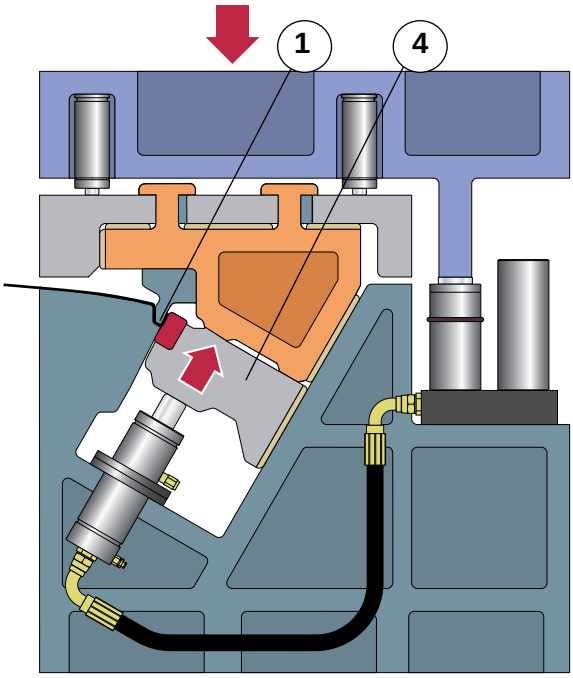

External stops (5) are recommended for the tool (5-10 mm above cylinder) to avoid damage to the cylinder during the return stroke.

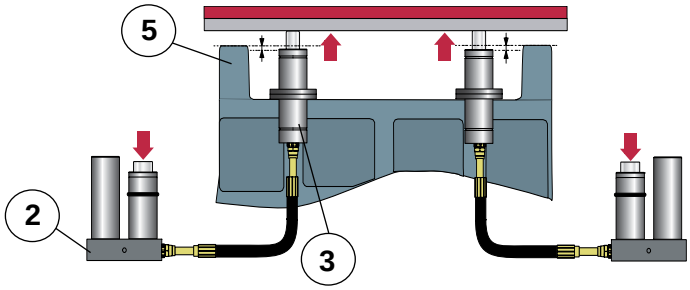

1-800-876-4976 • 440-526-5900 • FAX: 440-526-6807 • www.hysonproducts.com
© Hyson Products 2013

Component Selection

The following step by step instruction shows how to select the size of the units when taking into consideration the required forces, stroke length and the number of operations.

Step 1 (For piercing and cutting only)

Shear and stripping force calculations for piercing and cutting operations.

Sheet metal thickness..... : t = _____ mm

Tensile strength..... : σ = _____ N/mm^2

Shearing strength ($\tau = \sigma$ x 0.8)..... : τ = _____ N/mm^2

Diameter of punch ..... : d = _____ mm

(or)

Total cut length..... : 1 = _____ mm

Piercing force F_p

Piercing a round hole

$F_p = t \times \tau \times d \times \pi$

Piercing or cutting

$F_p = t \times \tau \times l$

Example

Calculate force needed to pierce a Ø 10.5 mm hole in a 1.2 mm thick panel. Tensile strength is 400 N/mm^2. (Normally between 270 - 400 N/mm^2).

Fp = 1.2 x 400 x 0.8 x 10.5 x ϖ
Fp = 12667
Fp ≈ 12.7 kN

Stripping force F_s

$F_s = F_p \times 0.11$ (roughly 11% of the required piercing force)

Example

Fs = 12667 x 0.11
Fs = 1393
Fs ≈ 1.4 kN

1-800-876-4976 • 440-526-5900 • FAX: 440-526-6807 • www.hysonproducts.com
© Hyson Products 2013

Step 2 Size of Cam Unit/Force Cylinder

Calculate the force required for the operation in the tool. Make sure to choose a cam unit/force cylinder with enough force to perform the operation. If the amount of force required is close to maximum for a cam unit/force cylinder, choose the larger size unit.

Required force (kN)	Cam Unit/ Force Cylinder
0-15	-15
15-40	-40
40-60	-60
60-90	-90
90-150	-150

Required force:

_____kN

Size Cam Unit/Force Cylinder:

_____

Example

Choose a cam unit -40 if the required force is 22 kN.

Step 3 Stroke length of Cam Unit/Force Cylinder

Check the necessary stroke of the cam unit/ force cylinder to perform the operation in the tool. Choose the shortest stroke length but make sure that there is enough room for the produced part in the tool.

Required stroke length (mm)	Max stroke length, Cam Unit (mm)	Max stroke length, force Cylinder (mm)
0-24	24	25
24-49	49	50
49-99	99*	100
99-150	124**	150

Stroke length Cam Unit/Force Cylinder:

_____ mm

* This stroke length is not available for cam unit -15

**This stroke length is only available for cam unit -40

Example

If the required stroke is 35 mm choose a cam unit/force cylinder with 50 mm stroke length.

Step 4 Order number for the Cam Unit/Force Cylinder

Choose the cam unit/force cylinder depending on the type of the operation.

Also see page 5, 11 and 25.

Example

The order number for the 40kN cam unit with 49 mm stroke length will be HCCU-40-49.

Compact Cam:

HCCH_____- _____

Flange Cam:

HCCF_____-_____

Force Cylinder:

HCF_____ -_____

Step 5a Size and stroke of Power Unit

Step 5a is valid when using 1-3 cam units/force cylinders of equal sizes connected to one power unit. Step 5b is valid when different cam units/ force cylinders are connected to one single power unit.

Use the table on the next page to choose the power unit. Read the table in the following order: cam unit/force cylinder – size – stroke – quantity – power unit. Always check that your available press stroke = used stroke power unit.
More than three cam units/force cylinders connected to one power unit is not recommended.
Do not exceed the maximum cam velocity, also see page 23 "Technica data".

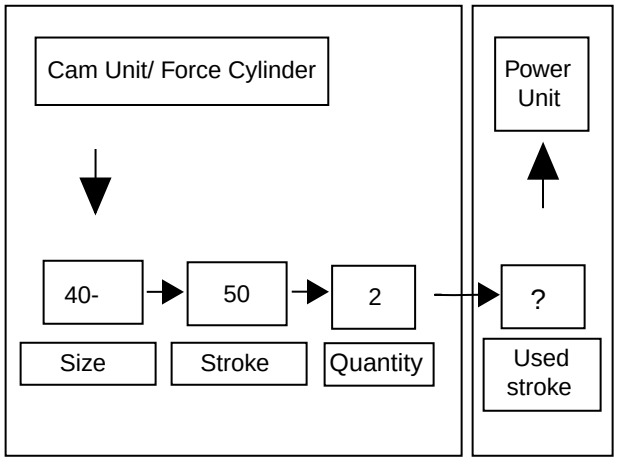

1-800-876-4976 • 440-526-5900 • FAX: 440-526-6807 • www.hysonproducts.com
© Hyson Products 2013

CAM UNIT / FORCE CYL.			POWER UNIT / Used stroke / Ratio CAM UNIT or FORCE CYL.-POWER UNIT														
Size	Stroke	Qty	15-	Stroke	Ratio	40-	Stroke	Ratio	60-	Stroke	Ratio	90-	Stroke	Ratio	150-	Stroke	Ratio
15-	25	1	35	35	1.0	35	20	2.5	35	16	4.0	35	14	6.3	35	13	9.8
	25	2	60	60	0.5	35	30	1.2	35	23	2.0	35	18	3.1	35	15	4.9
	25	3	110	85	0.3	60	40	0.8	35	29	1.3	35	22	2.1	35	18	3.3
	50	1	60	60	1.0	35	30	2.5	35	23	4.0	35	18	6.3	35	15	9.8
	50	2	110	110	0.5	60	50	1.2	35	35	2.0	35	26	3.1	35	20	4.9
	50	3				110	70	0.8	60	48	1.3	35	34	2.1	35	25	3.3
	100	1	110	110	1.0	60	50	2.5	35	35	4.0	35	26	6.3	35	20	9.8
	100	2				110	91	1.2	60	60	2.0	60	42	3.1	35	30	4.9
	100	3				160	131	0.8	110	85	1.3	60	58	2.1	60	41	3.3
	150	1	160	160	1.0	110	70	2.5	60	48	4.0	60	34	6.3	35	25	9.8
	150	2				160	131	1.2	110	85	2.0	60	58	3.1	60	41	4.9
	150	3							160	123	1.3	110	82	2.1	60	56	3.3
40-	25	1	110	72	0.4	35	35	1.0	35	26	1.6	35	20	2.5	35	16	3.9
	25	2				60	60	0.5	60	41	0.8	35	30	1.3	35	23	2.0
	25	3				110	85	0.3	60	57	0.5	60	40	0.8	35	29	1.3
	50	1				60	60	1.0	60	41	1.6	35	30	2.5	35	23	3.9
	50	2				110	110	0.5	110	72	0.8	60	50	1.3	35	35	2.0
	50	3				160	160	0.3	110	103	0.5	110	70	0.8	60	48	1.3
	100	1				110	110	1.0	110	72	1.6	60	50	2.5	35	35	3.9
	100	2							160	134	0.8	110	89	1.3	60	60	2.0
	100	3										160	129	0.8	110	86	1.3
	150	1							160	103	1.6	110	70	2.5	60	48	3.9
	150	2										160	129	1.3	110	86	2.0
	150	3													160	124	1.3
60-	25	1	110	110	0.3	60	50	0.6	35	35	1.0	35	26	1.6	35	20	2.4
	25	2				110	91	0.3	60	60	0.5	60	42	0.8	35	30	1.2
	25	3				160	131	0.2	110	85	0.3	60	58	0.5	60	41	0.8
	50	1				110	91	0.6	60	60	1.0	60	42	1.6	35	30	2.4
	50	2							110	110	0.5	110	74	0.8	60	51	1.2
	50	3							160	160	0.3	110	106	0.5	110	71	0.8
	100	1							110	110	1.0	110	74	1.6	60	51	2.4
	100	2										160	138	0.8	110	92	1.2
	100	3													160	133	0.8
	150	1							160	160	1.6	110	106	1.6	110	71	2.4
	150	2													160	133	1.2
90-	25	1				110	73	0.4	60	49	0.6	35	35	1.0	35	26	1.6
	25	2				160	136	0.2	110	88	0.3	60	60	0.5	60	42	0.8
	25	3							160	127	0.2	110	85	0.3	60	58	0.5
	50	1				160	136	0.4	110	88	0.6	60	60	1.0	60	42	1.6
	50	2										110	110	0.5	110	74	0.8
	50	3										160	160	0.3	110	106	0.5
	100	1										110	110	1.0	110	74	1.6
	100	2													160	138	0.8
	150	1										150	160	1.0	110	106	1.6
150-	25	1				110	108	0.3	110	71	0.4	60	49	0.6	35	35	1.0
	25	2							160	132	0.2	110	88	0.3	60	60	0.5
	25	3										160	127	0.2	110	85	0.3
	50	1							160	132	0.4	110	88	0.6	60	60	1.0
	50	2													110	110	0.5
	50	3													160	160	0.3
	100	1													110	110	1.0
	150	1													160	160	1.0

Combinations of cam units and power unit marked ▒ are normally not recommended as maximum cam velocities can be exceeded if power unit is stroked too quickly. Also see the following examples.

See the following examples:

Example 1.

If you have chosen one compact cam unit, HCCU-40x49, the normal power unit will be HCPU-40x60. The used stroke of the power unit is 60 mm. The ratio would be 1.0, which gives it the same compact cam stroke velocity as the press. (Press stroke 10 mm —Cam stroke 10 mm)

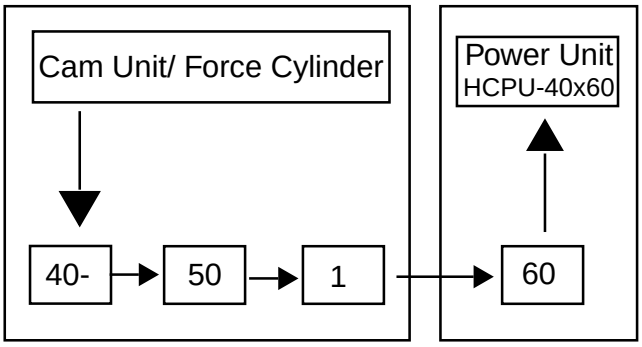

Example 2.

If it is possible to use only 30 mm of stroke from the press to perform an operation, choose a larger power unit (HCPU-90x35) connected to one cam unit (HCCU-40x49). The used stroke of the power unit will be 30 mm and the ratio 2.5. If the press speed is 0.3 m/s the cam speed will be 2.5x0.3 = 0.75 m/s. (Press stroke 10 mm — Cam stroke 25 mm)

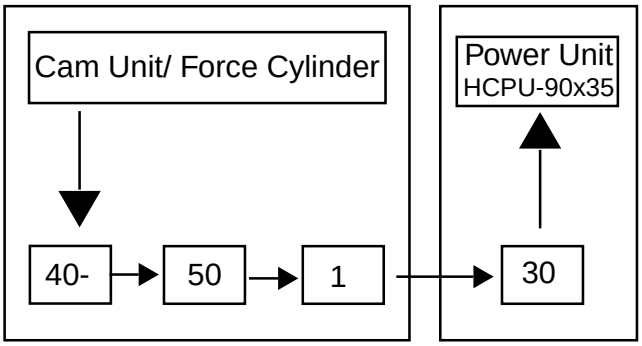

The used stroke of the power unit and the cam unit/ force cylinder can always be optimized to suit the situation in the tool. In some installations it is necessary to increase the velocity of the cam relative to the press. Note that the movement of the cams during the stroke is not equal when more than one cam is connected to the power unit.

Example 3.

If you choose two cam units of size HCCU-40x49 and have a possible 110 mm of the press stroke available, then use the power unit HCPU-40x110. The used stroke of the power unit will be 110 mm and the ratio 0.5.

If the press speed is 0.3 m/s, the medium velocity of the cams will be 0.5 x 0.3 = 0.15 m/s.

(Press stroke 10 mm — Cam stroke approximately 5 mm)

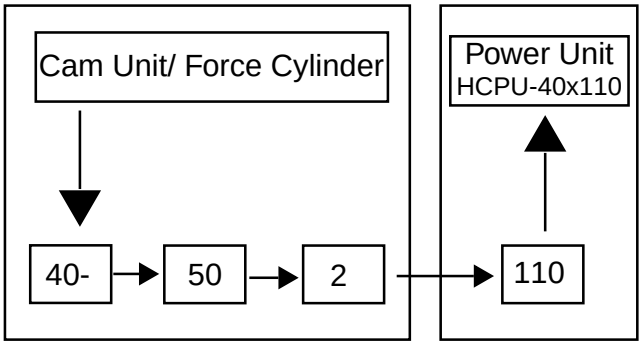

Power Unit:

HCPU_____-_____

1-800-876-4976 • 440-526-5900 • FAX: 440-526-6807 • www.hysonproducts.com
© Hyson Products 2013

Step 5b Size and stroke of Power Unit using different sizes of Cam Units/ Force Cylinders

Determine first the total oil volume for the cam units/force cylinders using the formula below. The total oil volume is the sum of the volumes of all cam units/force cylinders. The volume is the piston area times the used stroke. The total oil volume V_c for the cam units/force cylinders = minimum oil volume for the power unit in dm^3. A_n is the piston area in the cam units in dm^2 as shown in Table 1.

$V_c = ((A_1 \times S_1) + (A_2 \times S_2) \ldots\ldots (A_n \times S_n))/100$

A_n = Area, cam unit
S_n = Stroke length, cam unit

Choose the appropriate power unit from table 2. The power unit has to give at least the minimum volume of oil as calculated above. Calculate the used stroke S_p of the power unit using the formula below:

$S_p = ((V_c / V_{HCPU}) * S_{HCPU}) + 10$

V_c = Total oil volume cam units/force cylinder
V_{HCPU} = Oil volume power unit
S_{HCPU} = Stroke power unit

Note, the additional 10 mm is required so that a precise cam stroke is performed. See page 8 "Function Description".

Also see the following example:

Choose a power unit to supply one cam unit HCCU-15x49 and one force cylinder HCF-40x50 with only 40 mm used stroke.

$V_c = ((A_{CC} \times S_{CC}) + (A_{HCF} \times S_{HCF}))/100$

$V_c = ((0.13 \times 49) + (0.31 \times 40))/100$

(See Table 1)

$V_c = 0.189$

Table 1. Piston area for the Cam Units/Force Cylinders

HCCU/HCF	15	40	60	90	150
A_n (dm^2)	0.13	0.31	0.50	0.79	1.23

Total oil volume Cam Units/Force Cylinders:

V_c = _____dm^3

Table 2. Oil volume Power Unit V_{HCP}

Stroke length S_{HCPU}	HCPU				
	15	40	60	90	150
25 mm	0.031	0.078	0.126	0.196	0.307
50 mm	0.063	0.156	0.251	0.393	0.614
100 mm	0.126	0.312	0.502	0.785	1.227
150 mm	0.188	0.468	0.753	1.178	1.841

Used stroke Power Unit:

S_P = _____mm

Choose a power unit with more than 0.189 dm^3 oil volume for example HCPU-60X60 which has 0.251 dm^3. (Another alternative HCPU-40x110.)
Calculate used stroke of the power unit:

$S_p = ((V_c / V_p) \times S_{HCPU}) + 10$

$S_p = ((0.189 / 0.251) \times 50) + 10$

$S_p = 48$ mm

In the above example, a power unit HCPU-60X60 is recommended with a used stroke of 48 mm. Do not exceed the specified velocity of the cam units/force cylinders according to page 23 "Technical data". Remember that one of the cams will move slightly before the other one when using two cams coupled to one power unit.

Step 6

Choose hose and adapters according to page 59 "Dimensions for accessories".
Maximum hose length between power unit and cam unit is 2 m. The size of the hose is always set by the size of the power unit. The size of the hose is adapted for the oil flow according to the velocities in page 23 "Technical data".

If you need a smaller hose than our normal specifications, check your press velocity and refer to Table 1 on page 23 "Technical data".

It is easiest to choose the correct hose length when the cam unit/force cylinder and the power unit are installed in the tool.

Make sure that the hose is long enough and is protected against sharp edges and external damage. The hose will flex a little due to the oil pressure pulsation during operation. Make sure the minimum bending radius of the hoses is not below that which is specified when installed.

	Hose size - Press velocity			
Power Unit	**Standard size Max velocity 0.8 m/s**	**0.6 m/s**	**0.4 m/s**	**0.2 m/s**
HCPU-15	1/2”	3/8”	3/8”	3/8”
HCPU-40	3/4”	3/4”	1/2”	1/2”
HCPU-60	1”	3/4”	3/4”	1/2”
HCPU-90	1”	1”	3/4”	1/2”
HCPU-150	1 1/4”	1 1/4”	1”	3/4”

Table 1

1-800-876-4976 • 440-526-5900 • FAX: 440-526-6807 • www.hysonproducts.com
© Hyson Products 2013

Technical Data

Capacity and performance

The forces in the table below are valid when the following normal gas pressures are used

Accumulator	150 bar
Force Cylinder	20 bar
HCCU-15x40, HCCF-40 Return spring T2-180	180 bar
HCCU-60 Return spring T3-350	180 bar
HCCU-90 Return spring NP-500	150 bar
HCCU-150 Return spring T3-750	150 bar

Description	Unit	Force Cylinder					Compact Cam					Flange Cam	Power Unit				
		HCF					HCCU					HCCF	HCPU				
Force (size)	kN	15	40	60	90	150	15	40	60	90	150	40	15	40	60	90	150
Working return force (min)	kN	1.5	4	6	9	14	2	4	7	10	15	4	---	---	---	---	---
Max frequency	op/min	60			30		60			30		60	60			30	
Max velocity	m/s	1.6					1.6					1.6	1.6				
Min gas pressure	bar	10					125			105		125	50				
Max gas pressure	bar	40					180			150		180	180				
Stroke length	mm	25, 50, 100, 150					24, 49, 99*, 124**					49, 99	35, 60, 110, 160				
Expected life time	op.	$1x10^6$					$1x10^6$					$1x10^6$	$1x10^6$				
Surrounding temp	°C	10-40					10-40					10-40	10-40				

* not HCCU-15
** only HCCU-40

Other values than those specified in the table above could be accepted under special conditions or combinations of stroke length, velocity and frequency.

Other specifications

The recommended hydraulic oil is ISO Viscosity grade 32.

Cam Unit/Force Cylinder force as a function of nitrogen pressure in the Accumulator

If you need to increase or decrease the force of the cam unit/force cylinder, it is possible to change the nitrogen pressure according to the diagram below.

Example.

A force cylinder size 40 is used to perform a forming operation. With the normal accumulator charge pressure of 150 bar, this force cylinder gives 40 kN. If 25 kN of force is required then the accumulator charge pressure should be reduced to 100 bar instead.

Force Cam Unit/ Force Cylinder - Nitrogen Pressure Accumulator

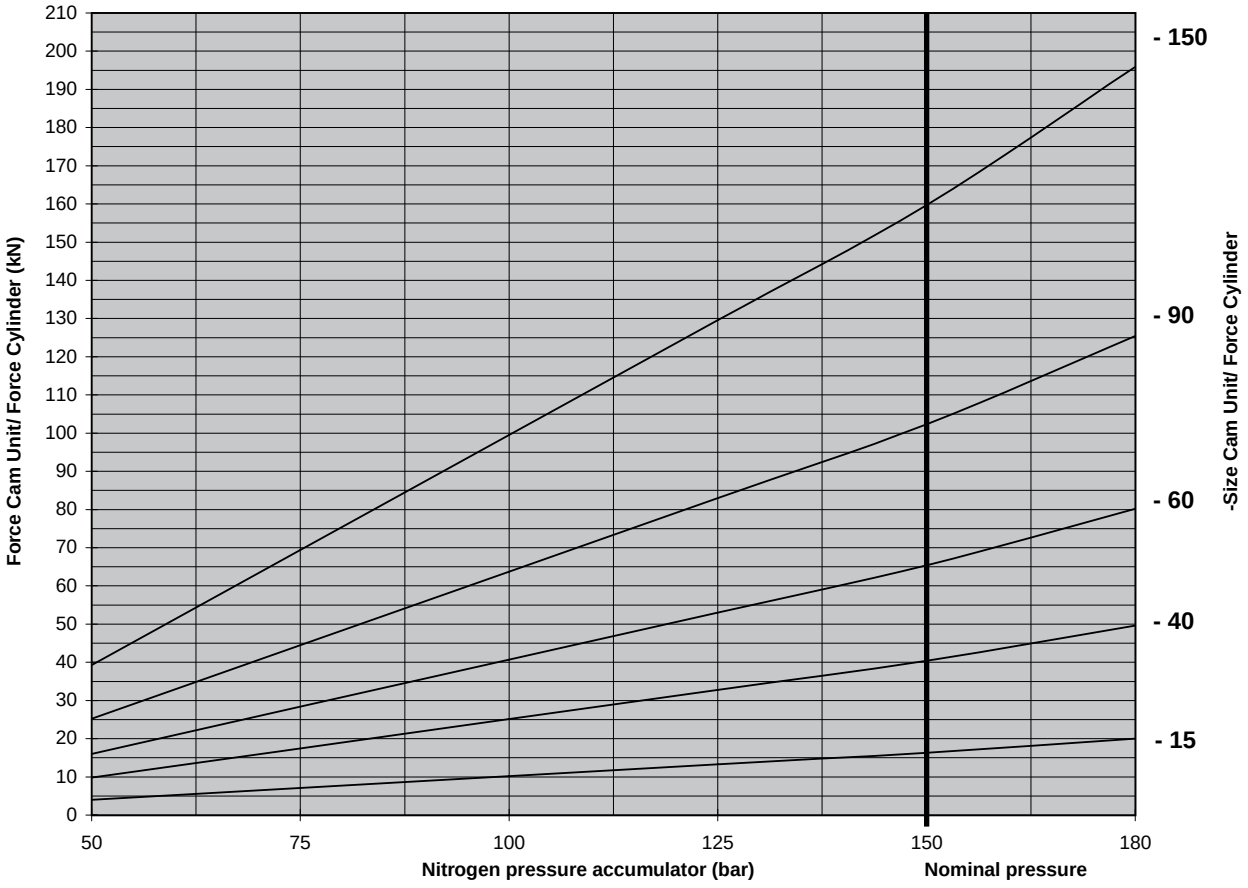

1-800-876-4976 • 440-526-5900 • FAX: 440-526-6807 • www.hysonproducts.com
© Hyson Products 2013

Dimensions for Power and Cam Units/Force Cylinder

APPROVED PED 97/23/EC 2 million

HCPU-15
Power Unit

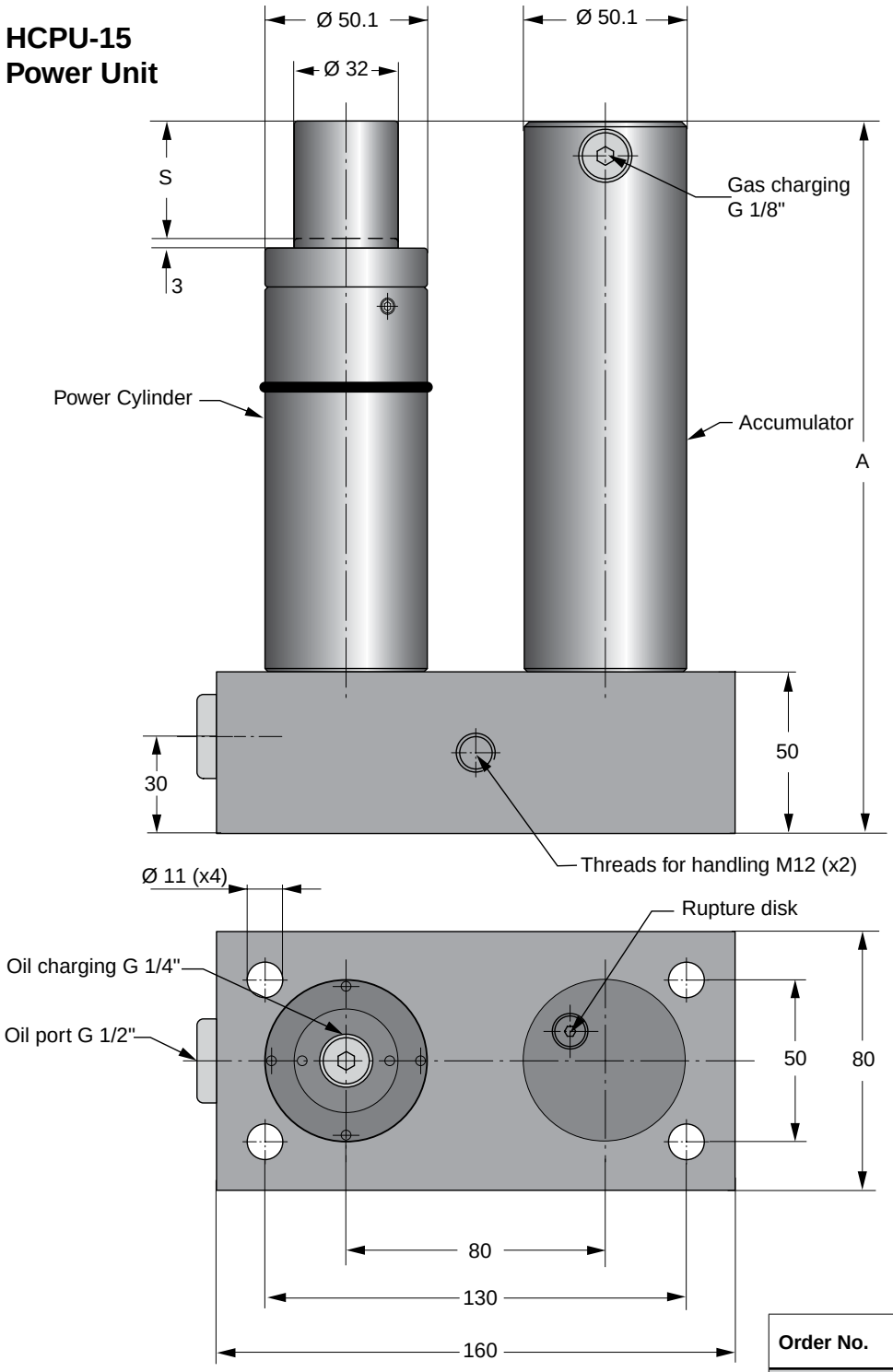

View

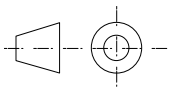

Order No.	Force (kN)	Stroke S (mm)	A	Weight (kg)
HCPU-15x35	15	35	220	8.2
HCPU-15x60	15	60	270	9.1
HCPU-15x110	15	110	370	10.5
HCPU-15x160	15	160	470	11.3

HCPU-S-15 Power Unit, with Separate Accumulator

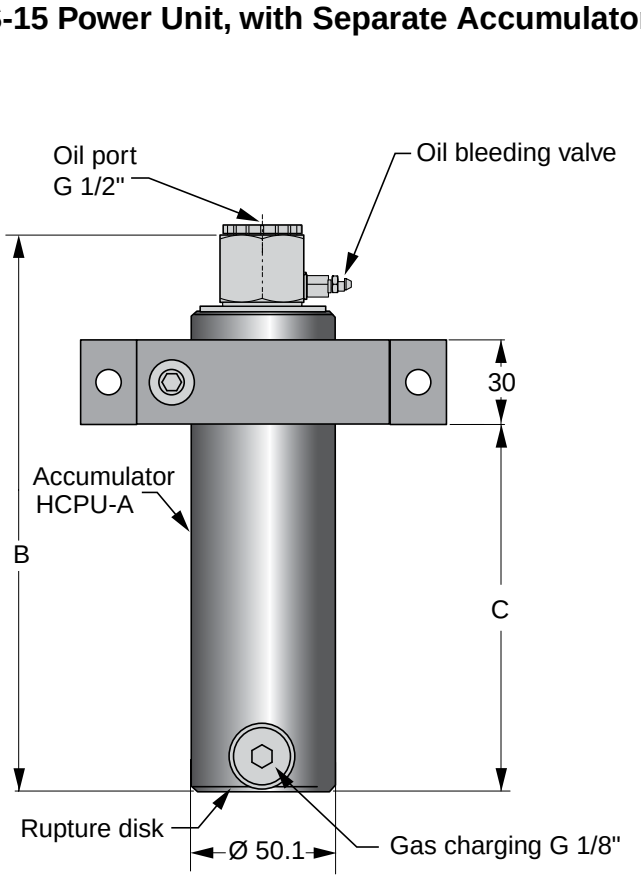

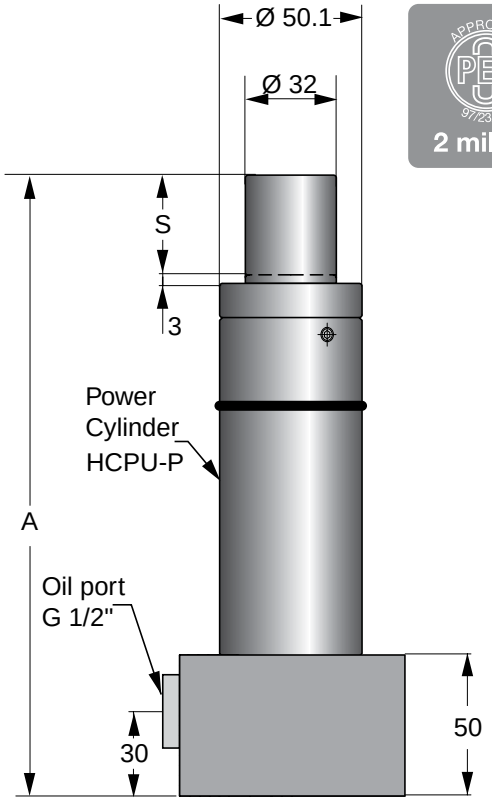

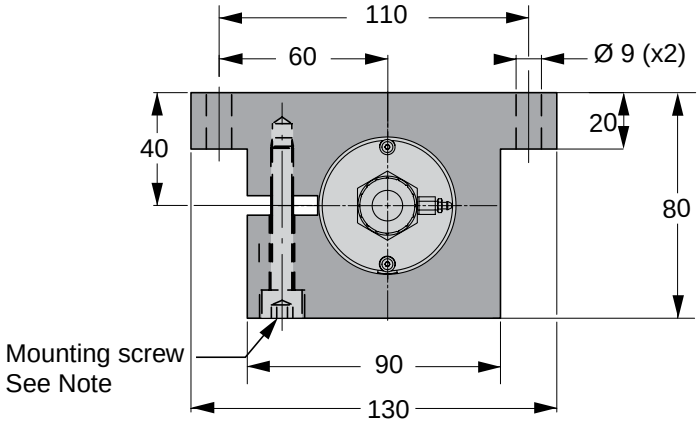

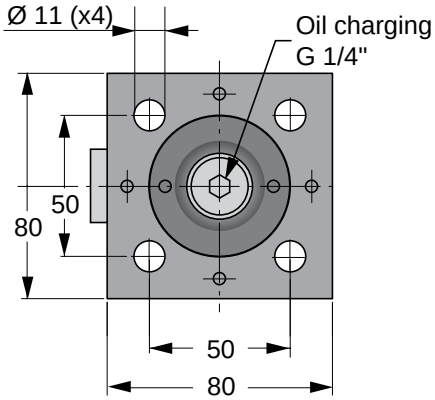

Note: The Mounting screw (M8) should be tightened with torque 25Nm

Order No. Complete Power Unit HCPU-S	Weight (kg)	Force (kN)	Stroke S (mm)	A	B	C	Order No. Separate Power Cylinder HCPU-P	Weight (kg)	Order No. Separate Accumulator HCPU-A	Weight (kg)
HCPU-S-15x35	7.3	15	35	220	213	130	HCPU-P-15x35	4.3	HCPU-A-15x35	3.0
HCPU-S-15x60	8.1	15	60	270	264	180	HCPU-P-15x60	4.7	HCPU-A-15x60	3.4
HCPU-S-15x110	9.6	15	110	370	364	280	HCPU-P-15x110	5.5	HCPU-A-15x110	4.1
HCPU-S-15x160	10.7	15	160	470	464	380	HCPU-P-15x160	6.0	HCPU-A-15x160	4.7

Note: The Accumulator should always be used in the system.

View

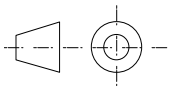

1-800-876-4976 • 440-526-5900 • FAX: 440-526-6807 • www.hysonproducts.com
© Hyson Products 2013

HCCU-15 Compact Cam

APPROVED PED 97/23/EC
2 million

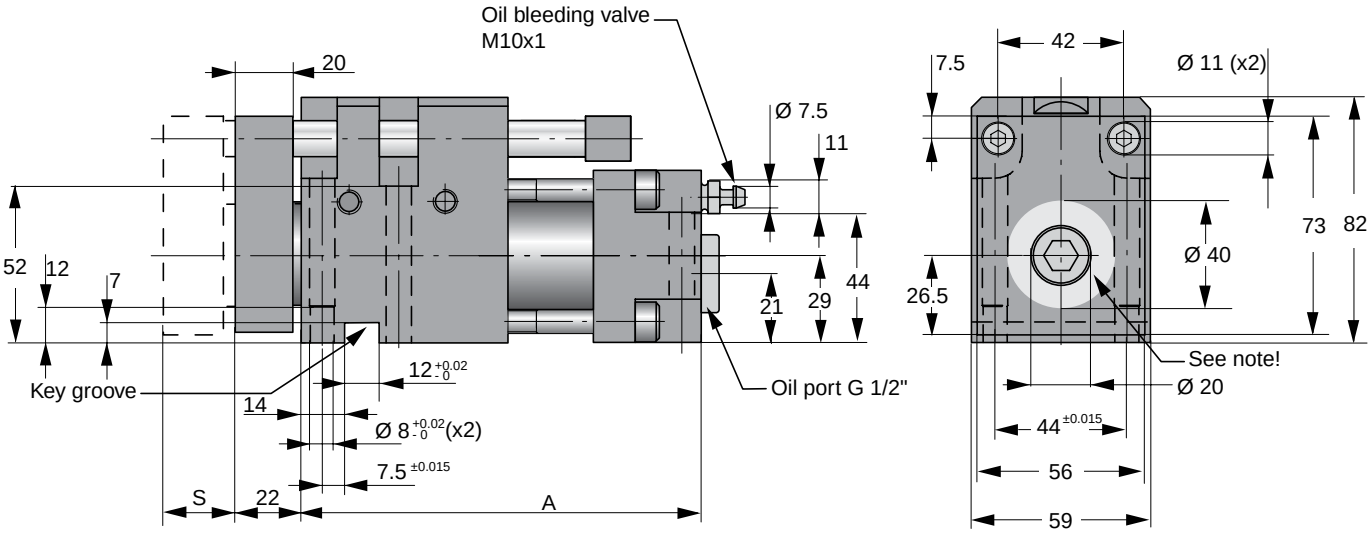

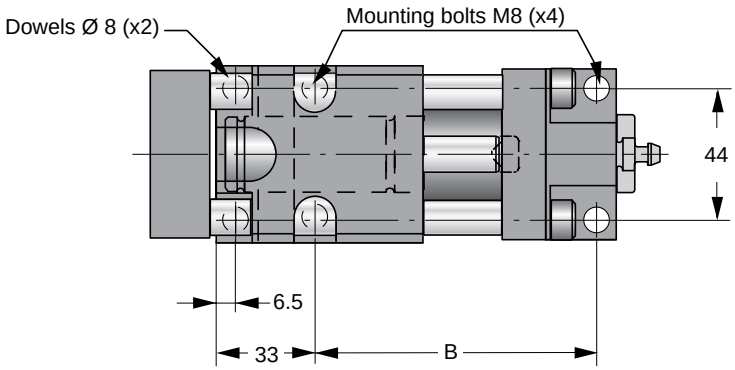

Note: Important installation information:
We recommend locating the punch in the center of the piston rod, but it is also possible to locate the force which the punch or punches will create during the operations within the area marked .

When piercing an opened hole or cutting an edge, we recommend that extra guiding is used to protect the unit against sideload.

View

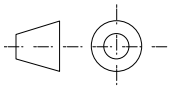

Order No.	Working force* (kN)	Return force (kN)	Stroke S (mm)	A	B	Weight (kg)
HCCU-15x24	15	2	24	133.5	94	4.2
HCCU-15x49	15	2	49	158.5	119	4.6

* = Nominal force available for the operation

HCCH-15 Compact Cam for pressure control

This version can only be used together with a hosed system, as there are no gas charging valves in the springs or adapters.

APPROVED PED 97/23/EC 2 million

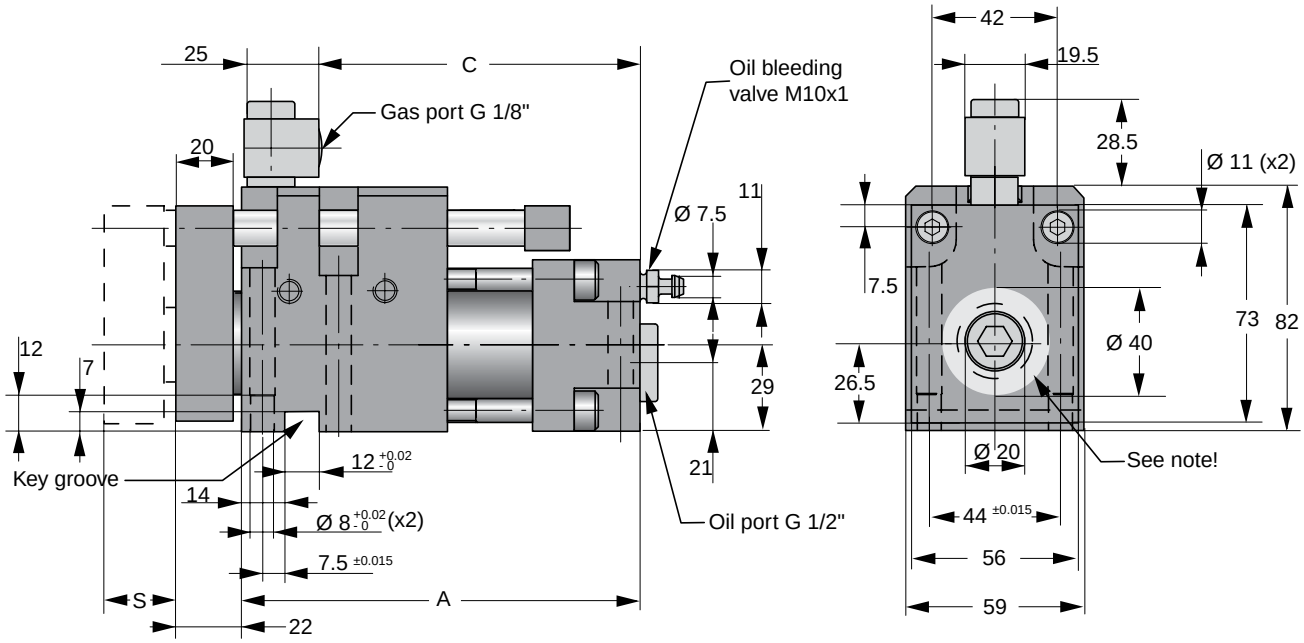

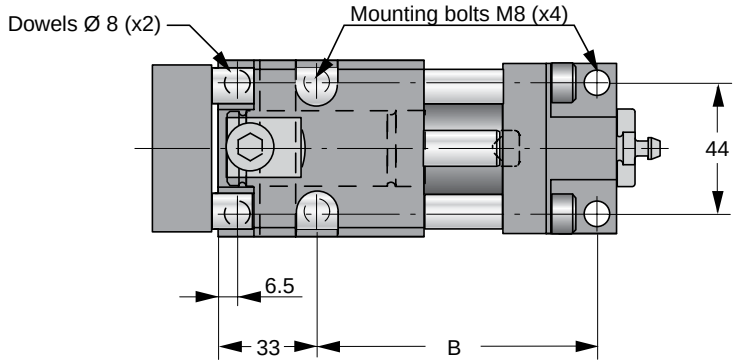

Note: Important installation information:
We recommend locating the punch in the center of the piston rod, but it is also possible to locate the force which the punch or punches will create during the operations within the area marked .

When piercing an opened hole or cutting an edge, we recommend that extra guiding is used to protect the unit against sideload.

Order No.	Working force* (kN)	Return force (kN)	Stroke S (mm)	A	B	C	Weight
HCCH-15x24	15	2	24	133.5	94	107	4.3
HCCH-15x49	15	2	49	158.5	119	132	4.7

* = Nominal force available for the operation

View

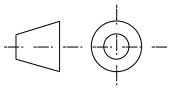

1-800-876-4976 • 440-526-5900 • FAX: 440-526-6807 • www.hysonproducts.com
© Hyson Products 2013

HCF-15 Force Cylinder

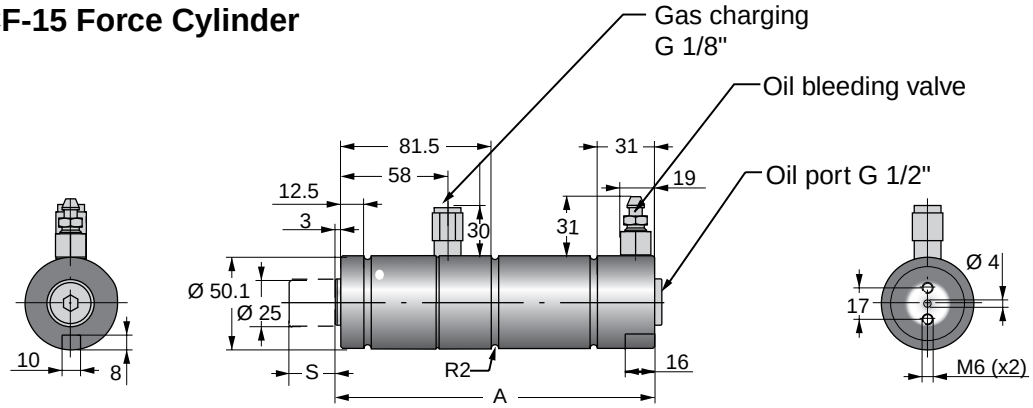

APPROVED PED 97/23/EC
2 million

Note: External stop is recommended for the tool (5-10 mm above cylinder) to avoid high load on the cylinder during the return stroke. See picture on page 7.

Order No.	Working force* (kN)	Return force (kN)	Stroke S (mm)	A	Weight (kg)
HCF-15x25	15	1.5	25	173	2.0
HCF-15x50	15	1.5	50	223	2.5
HCF-15x100	15	1.5	100	323	3.6
HCF-15x150	15	1.5	150	423	4.6

* = Nominal force for the operation

Flange mount HCF-15 Order No. 2014677-0750 (Mount only)

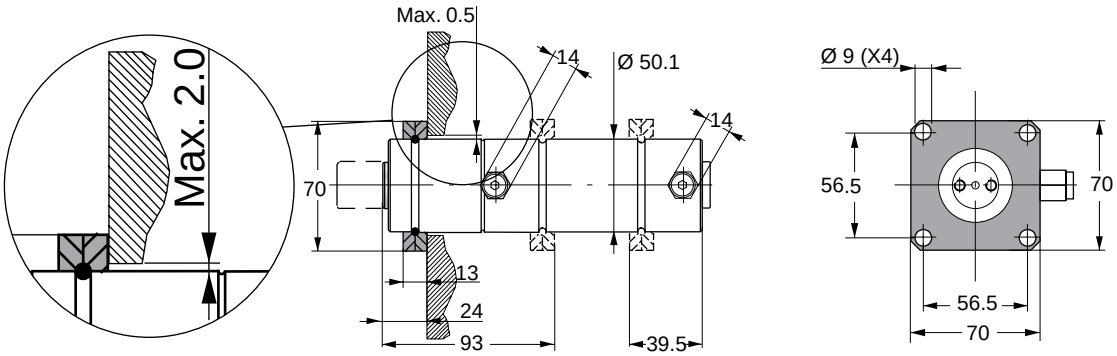

Foot mount HCF-15 Order No. 3016977-015 (Mounts only)

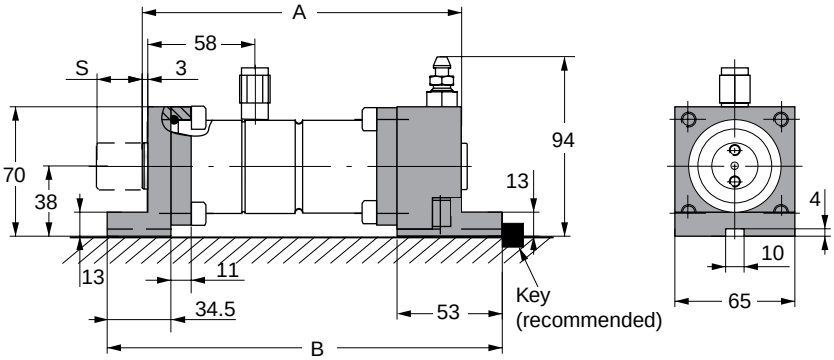

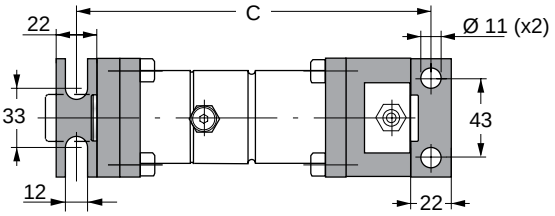

View

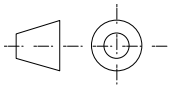

Model	A	B	C
HCF-15x25	173	214	192
HCF-15x50	223	264	242
HCF-15x100	323	364	342
HCF-15x150	423	464	442

HCF-SP-15 Force Cylinder with Side Port Plate

Note: External stop is recommended for the tool (5-10 mm above cylinder) to avoid high load on the cylinder during the return stroke. See picture on page 7.

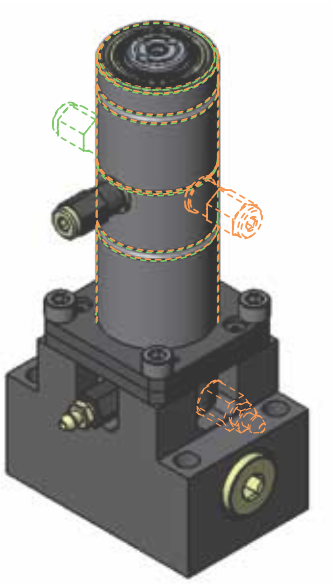

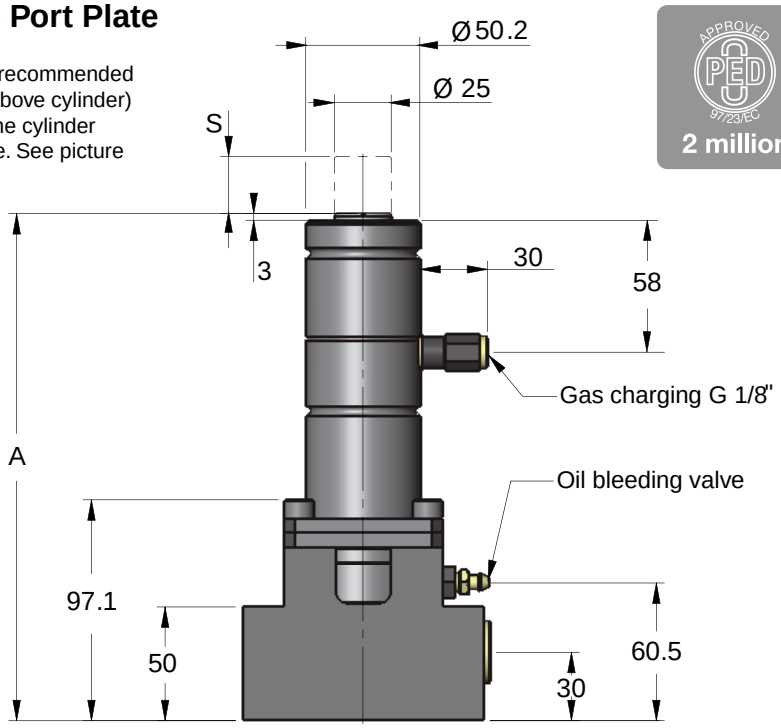

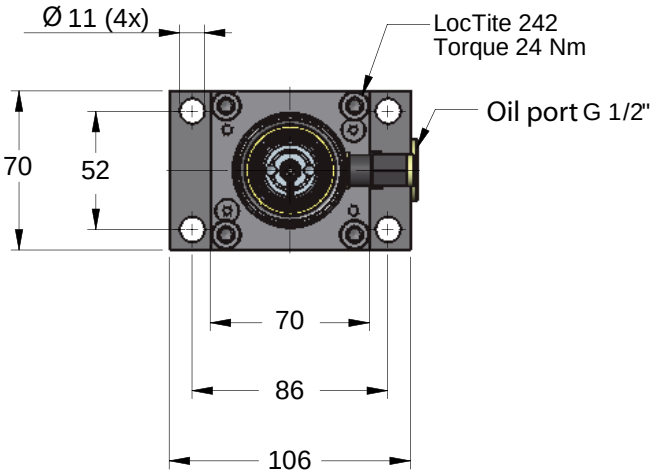

Order No.	Working force* (kN)	Return force (kN)	Stroke S (mm)	A	Weight [kg]
HCF-SP-15x25	15	1.5	25	223	5.6
HCF-SP-15x50	15	1.5	50	273	6.1
HCF-SP-15x100	15	1.5	100	373	7.1
HCF-SP-15x150	15	1.5	150	473	8.2

*= Nominal force for the operation

1-800-876-4976 • 440-526-5900 • FAX: 440-526-6807 • www.hysonproducts.com
© Hyson Products 2013

HCPU-40 Power Unit

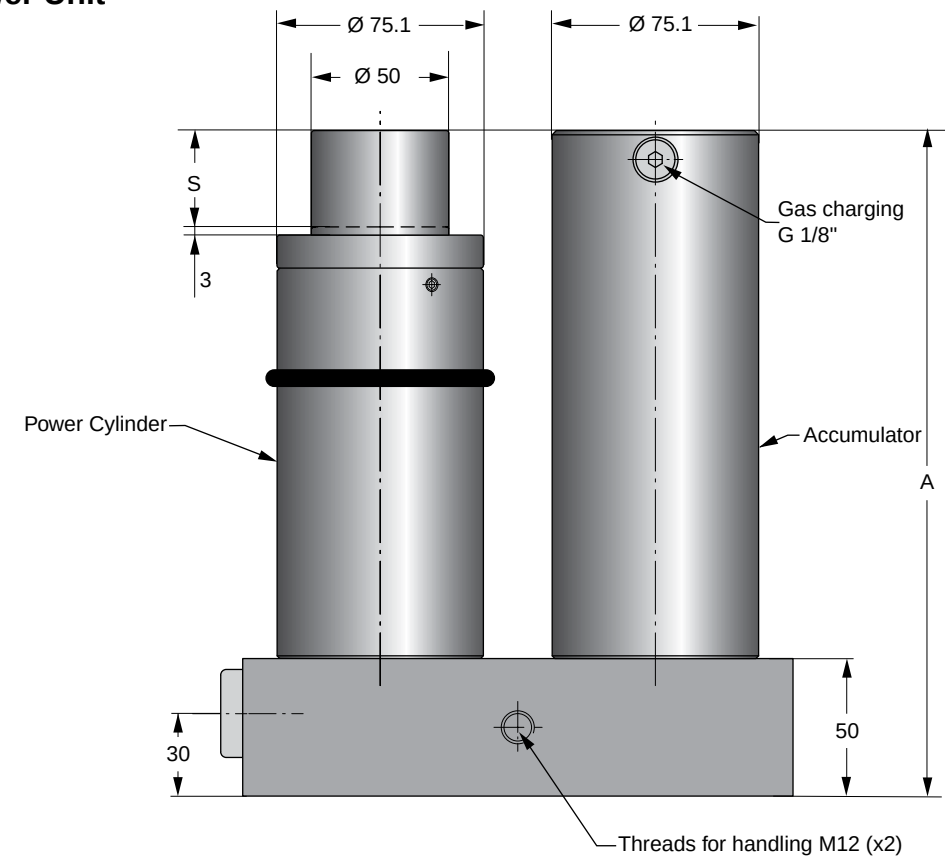

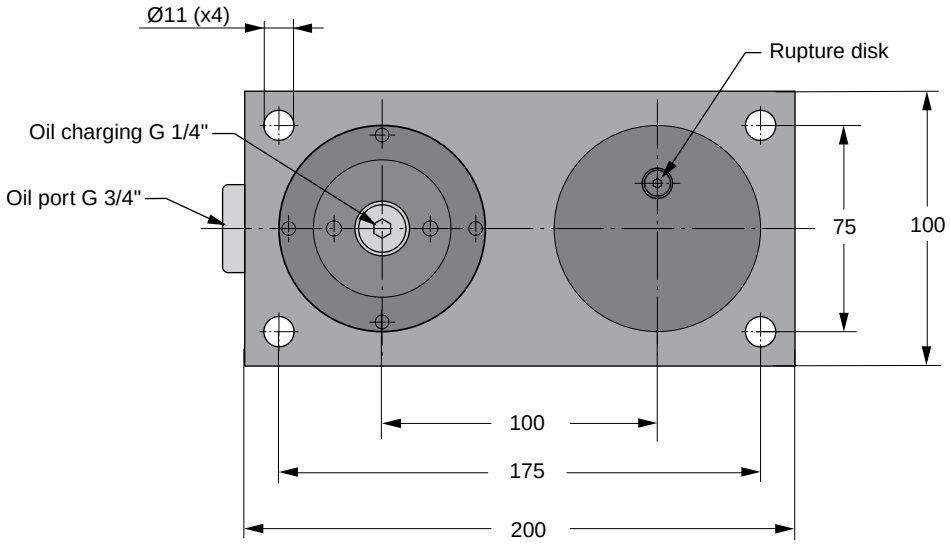

View

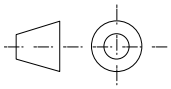

Order No.	Force (kN)	Stroke S (mm)	A	Weight (kg)
HCPU-40x35	40	35	242	15.7
HCPU-40x60	40	60	292	16.8
HCPU-40x110	40	110	392	19.1
HCPU-40x160	40	160	492	21.3

HCPU-S-40 Power Unit, with Separate Accumulator

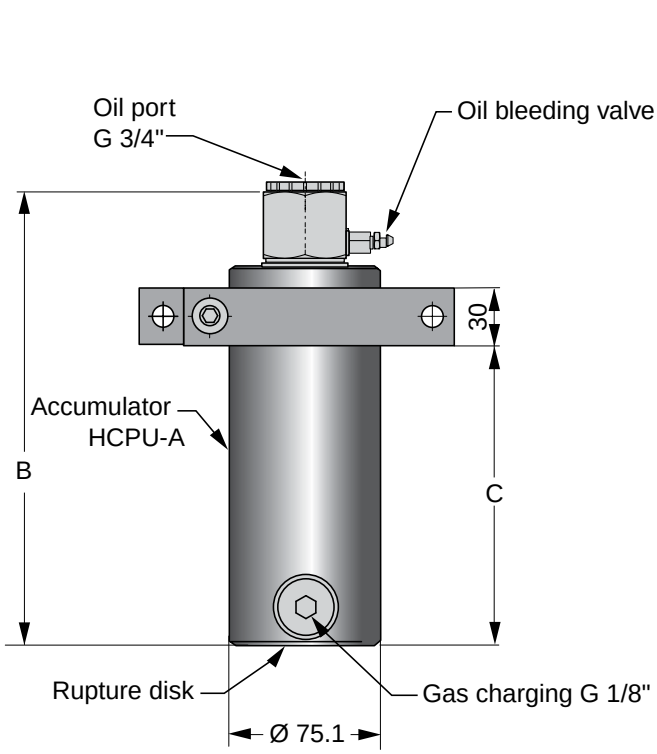

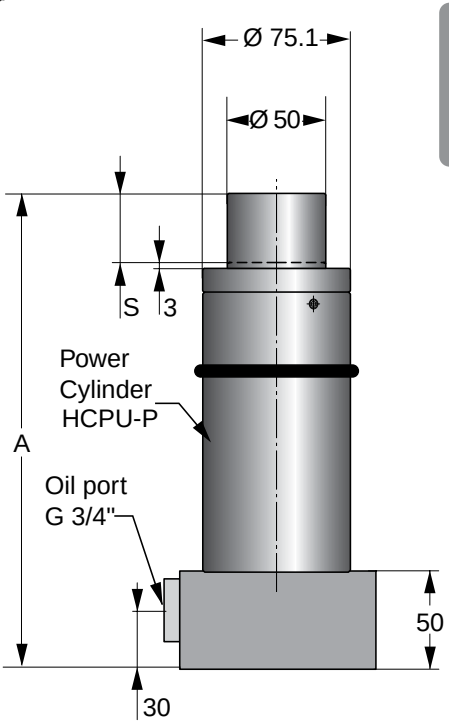

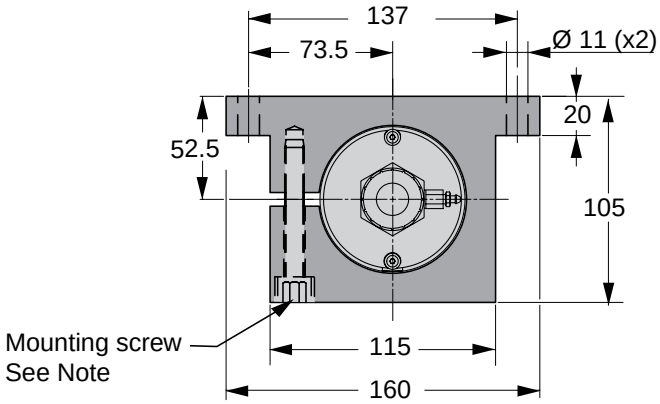

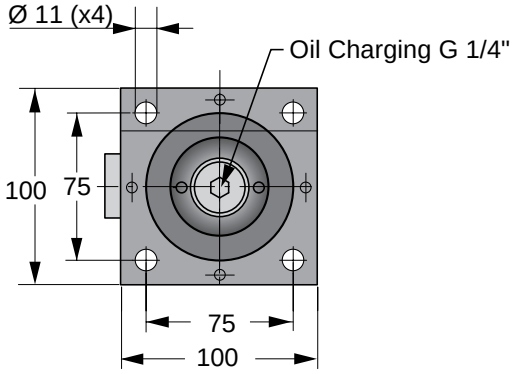

Note: The mounting screw (M10) should be tightened with torque 52Nm.

Order No. Complete Power Unit HCPU-S	Weight (kg)	Force (kN)	Stroke S (mm)	A	B	C	Order No. Separate Power Cylinder HCPU-P	Weight (kg)	Order No. Separate Accumulator HCPU-A	Weight (kg)
HCPU-S-40x35	14.0	40	35	242	231	152	HCPU-P-40x35	8.2	HCPU-A-40x35	5.8
HCPU-S-40x60	15.0	40	60	292	281	202	HCPU-P-40x60	8.7	HCPU-A-40x60	6.3
HCPU-S-40x110	17.4	40	110	392	381	302	HCPU-P-40x110	10.0	HCPU-A-40x110	7.4
HCPU-S-40x160	19.6	40	160	492	481	402	HCPU-P-40x160	11.2	HCPU-A-40x160	8.4

Note: The Accumulator should always be used in the system.

View

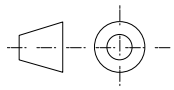

1-800-876-4976 • 440-526-5900 • FAX: 440-526-6807 • www.hysonproducts.com
© Hyson Products 2013

HCCU-40 Compact Cam

APPROVED PED 97/23/EC
2 million

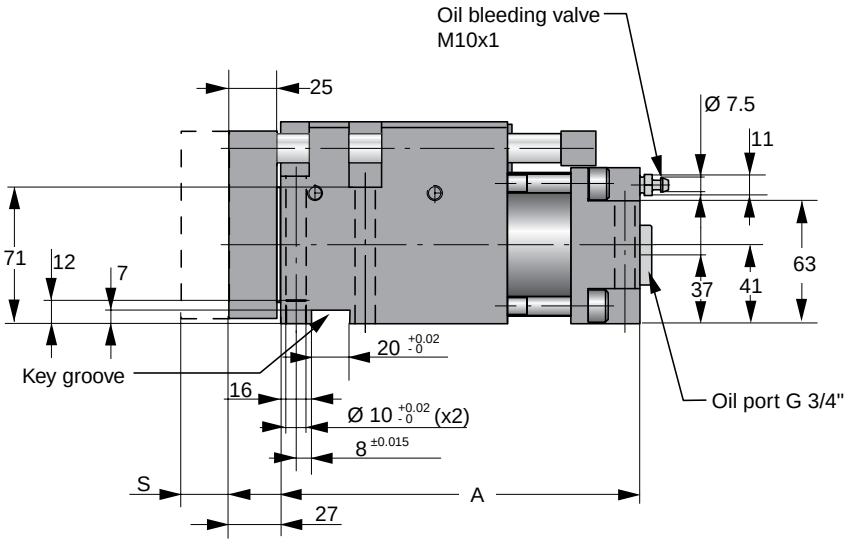

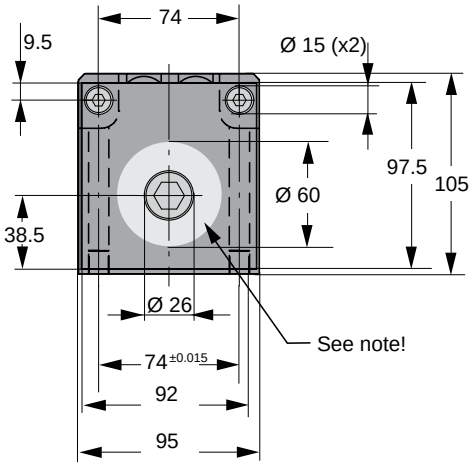

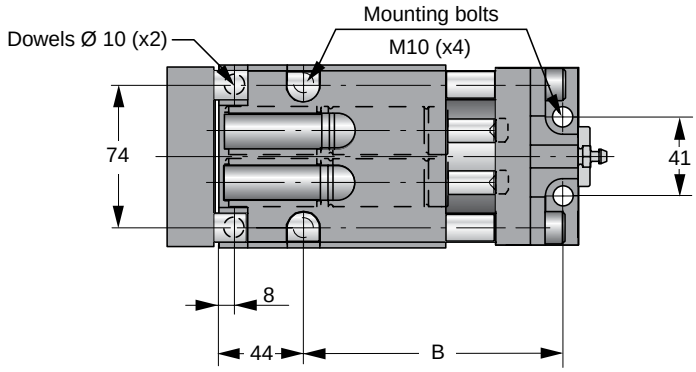

Note:
Important installation information:
We recommend locating the punch in the center of the piston rod, but it is also possible to locate the force which the punch will create in the operations within the area marked .

When piercing an opened hole or cutting an edge, we recommend that extra guiding is used to protect the unit against sideload.

View

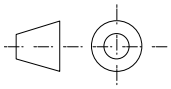

Order No.	Working force* (kN)	Return force (kN)	Stroke S (mm)	A	B	Weight (kg)
HCCU-40x24	40	4	24	187	135	10.5
HCCU-40x49	40	4	49	212	160	12.8
HCCU-40x99	40	4	99	262	210	15.0
HCCU-40x124	40	4	124	287	235	16.5

* = Nominal force available for the operation

© Hyson Products 2013

HCCH-40 Compact Cam for pressure control

APPROVED PED 97/23/EC 2 million

This version can only be used together with a hosed system, as there are no gas charging valves in the springs or adapters. There are two G1/8" gas ports which can be used to couple the hose system to. Use only one of these to connect the hose, the other should remain plugged.

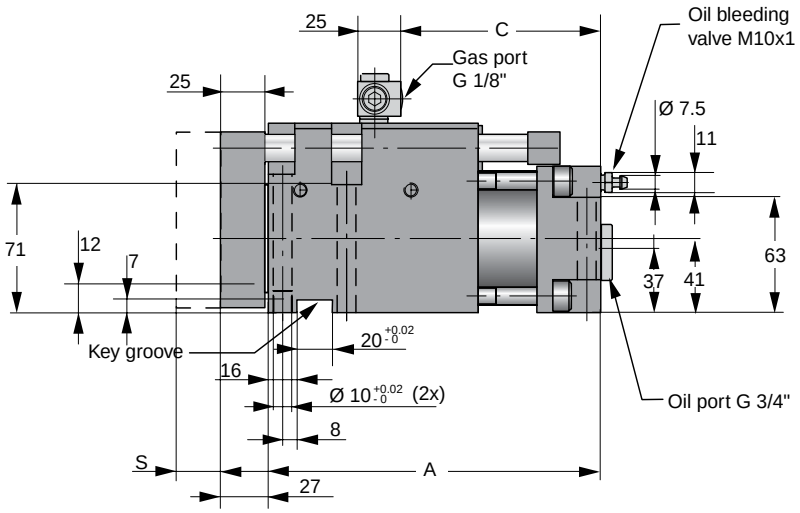

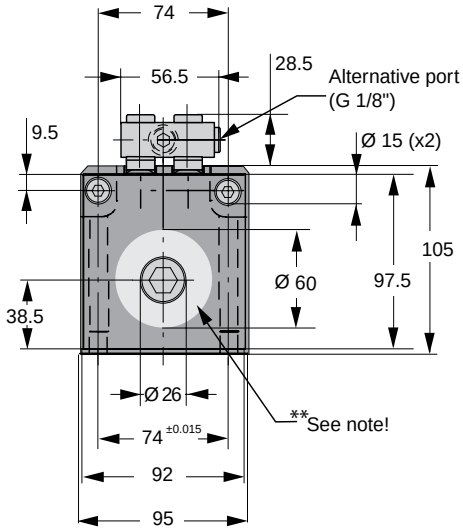

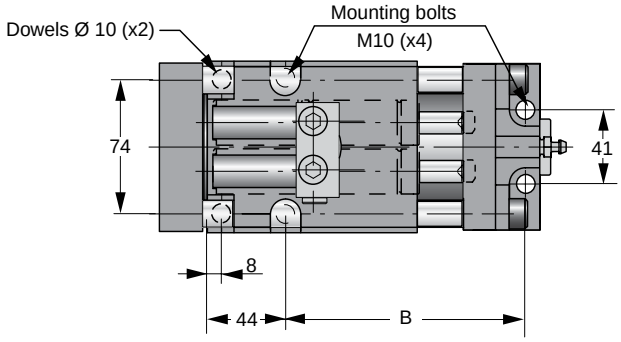

****Note: Important installation information:**
We recommend locating the punch in the center of the piston rod, but it is also possible to locate the force which the punch will create in the operations within the area marked .

When piercing an opened hole or cutting an edge, we recommend that extra guiding is used to protect the unit against sideload.

Order No.	Working force* (kN)	Return force (kN)	Stroke S (mm)	A	B	C	Weight (kg)
HCCH-40x24	40	4	24	187	135	112	10.7
HCCH-40x49	40	4	49	212	160	162	13.0
HCCH-40x99	40	4	99	262	210	237	15.2
HCCH-40x124	40	4	124	287	235	262	16.7

* = Nominal force available for the operation

View

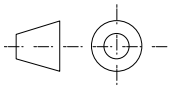

1-800-876-4976 • 440-526-5900 • FAX: 440-526-6807 • www.hysonproducts.com
© Hyson Products 2013

HCCF-40 Flange Cam

Patent No. SE 513031, EP 1212156

APPROVED PED 97/23/EC 2 million

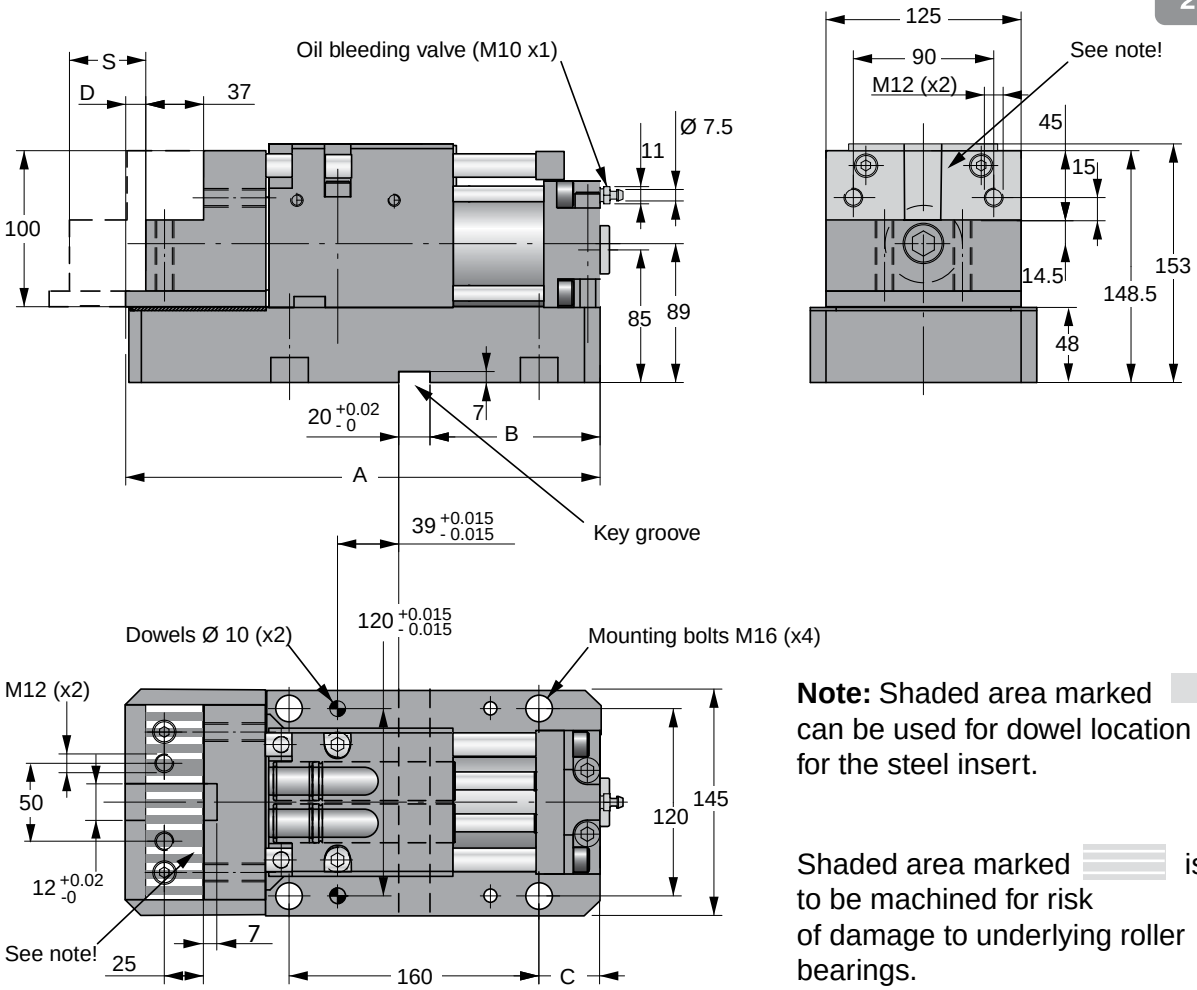

Note: Shaded area marked can be used for dowel location for the steel insert.

Shaded area marked is not to be machined for risk of damage to underlying roller bearings.

View

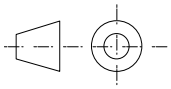

Order No.	Working force* (kN)	Return force (kN)	Stroke S (mm)	A	B	C	D	Weight (kg)
HCCF-40x49	40	4	49	304	109	39	13	35
HCCF-40x99	40	4	99	404	159	89	63	43

* = Nominal force available for the operation

HCCF-H-40 Flange Cam

Patent No. SE 513031, EP 1212156

This version can only be used together with a hosed system, as there are no gas charging valves in the springs or adapters. There are two G 1/8" gas ports which can be used to couple a hose system to. Use only one of these to connect the hose system, the other should remain plugged.

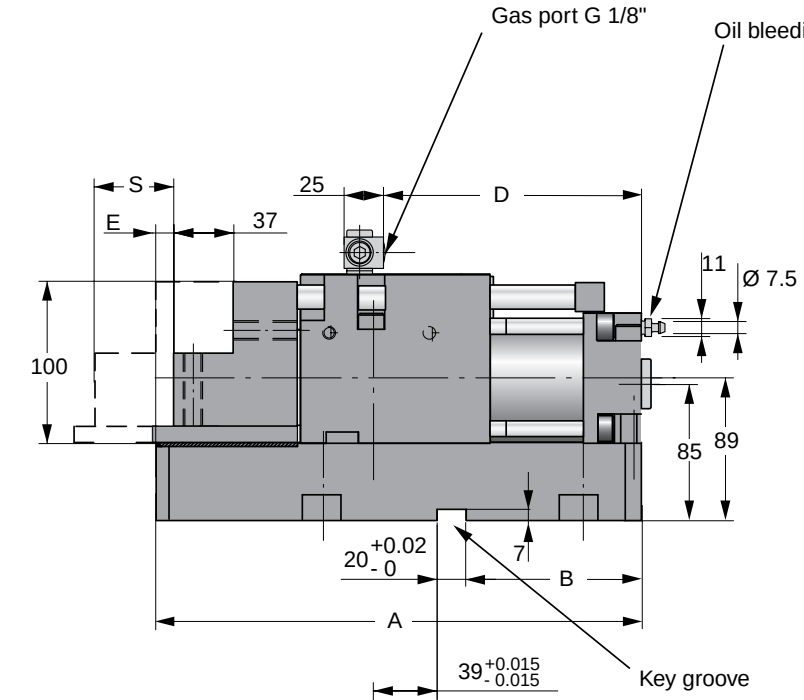

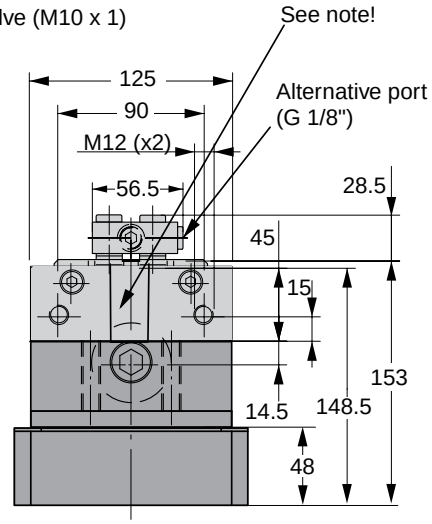

Note: Shaded area marked can be used for dowel location for the steel insert.

Shaded area marked is not to be machined for risk of damage to underlying roller bearings.

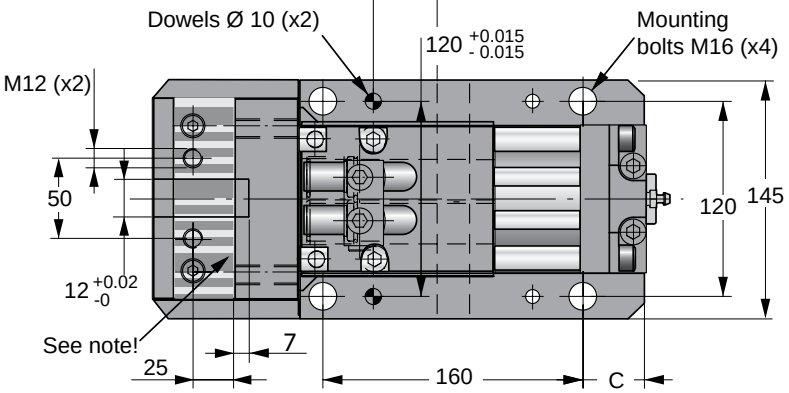

Order No.	Working force* (kN)	Return force (kN)	Stroke S (mm)	A	B	C	D	E	Weight (kg)
HCCF-H-40x49	40	4	49	304	109	39	162	13	35
HCCF-H-40x99	40	4	99	404	159	89	237	63	43

* = Nominal force available for the operation

View

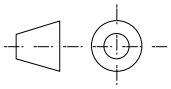

1-800-876-4976 • 440-526-5900 • FAX: 440-526-6807 • www.hysonproducts.com
© Hyson Products 2013

Top mount kit for Flange Cam
HCCF-40x49 and HCCF-H-40x49
HCCF-40x99 and HCCF-H-40x99

(Order No. 2018393)

APPROVED PED 97/23/EC 2 million

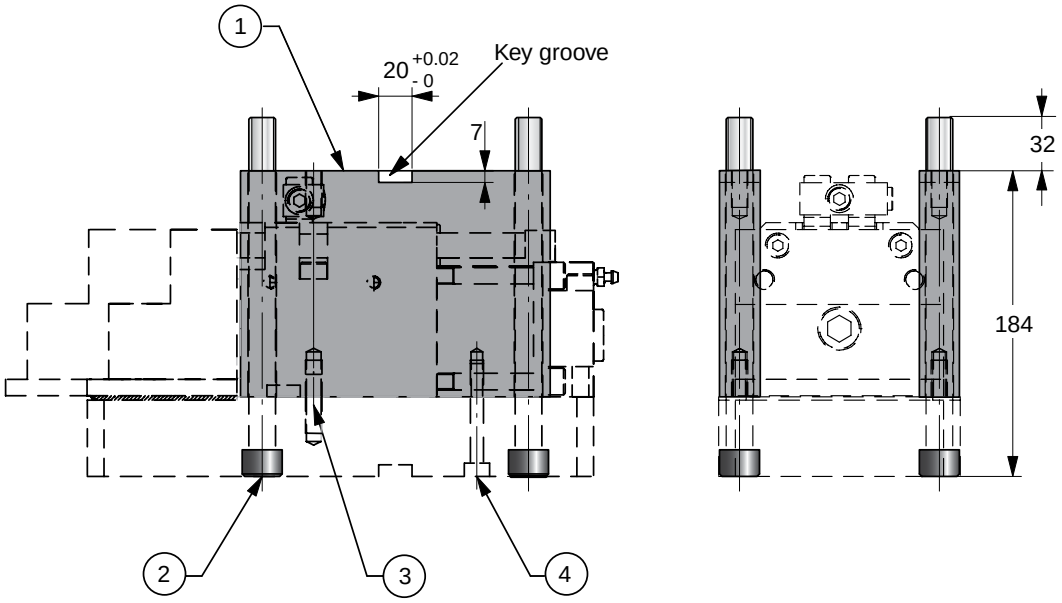

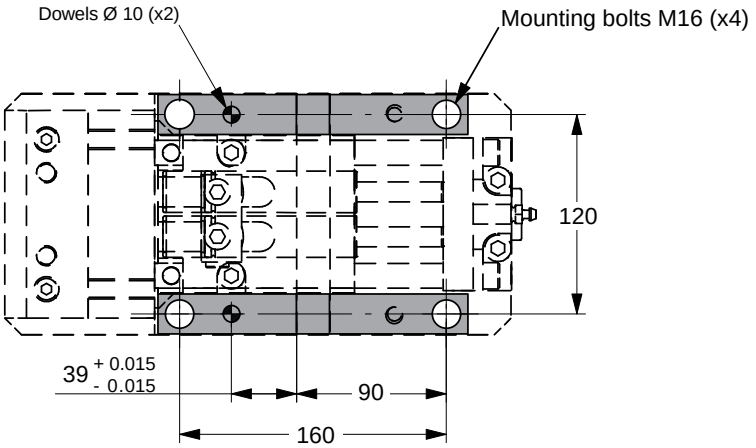

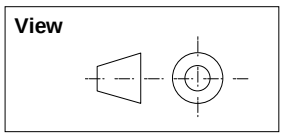

Position	Quantity	Description
1	2	Spacer
2	4	Bolt M16 x 200
3	2	Dowel pin Ø 10 x 40
4	2	Bolt M8 x 60

* = Nominal force available for the operation

Flange Cam installation possibilities

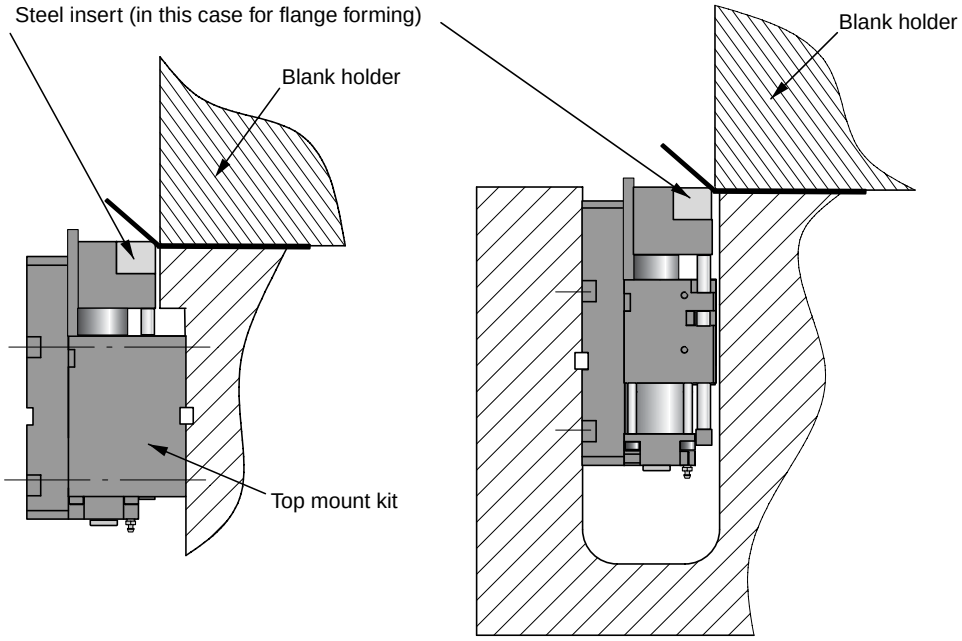

Top mount **Base mount**

Flange Cam force directions and location

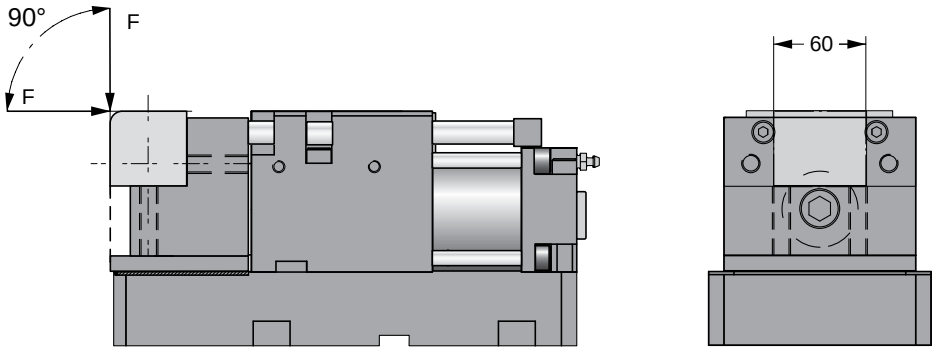

Allowable force directions "F" (within) created by the flanging operation.

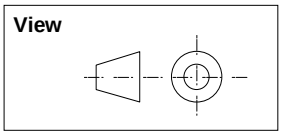

1-800-876-4976 • 440-526-5900 • FAX: 440-526-6807 • www.hysonproducts.com
© Hyson Products 2013

HCF-40 Force Cylinder

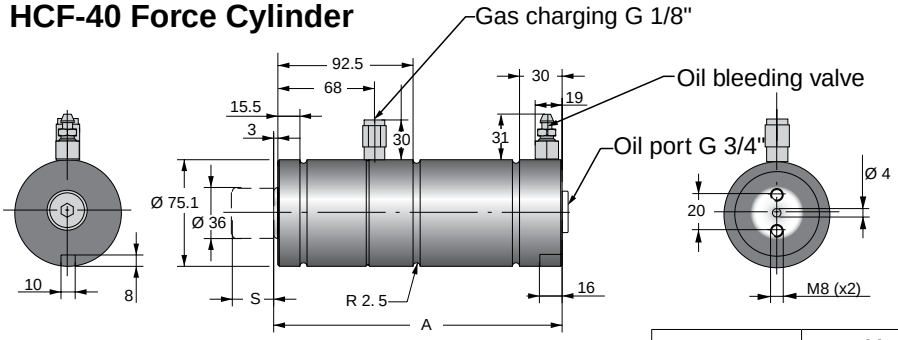

APPROVED PED 97/23/EC 2 million

Note: External stop is recommended for the tool (5-10 mm above cylinder) to avoid high load on the cylinder during the return stroke. See picture on page 7.

Order No.	Working force* (kN)	Return force (kN)	Stroke S (mm)	A	Weight (kg)
HCF-40x25	40	4	25	195	5.5
HCF-40x50	40	4	50	245	6.5
HCF-40x100	40	4	100	345	8.6
HCF-40x150	40	4	150	445	10.7

* = Nominal force for the operation

Flange mount for HCF-40 Order No. 2014677-1500 (Mount only)

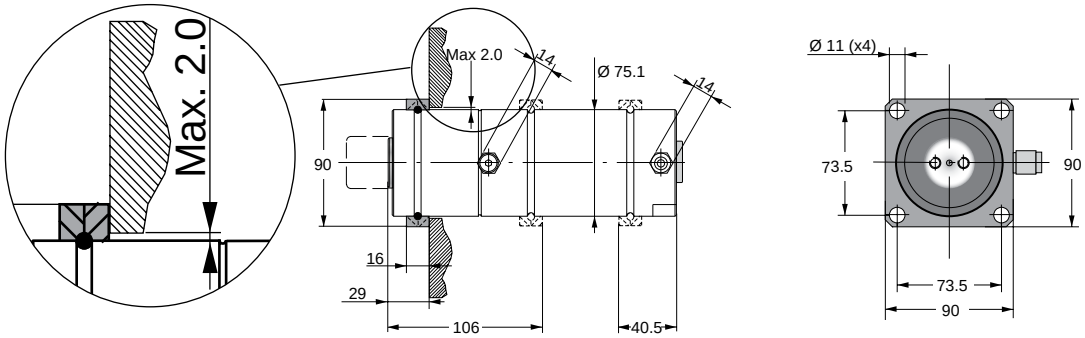

Foot mount for HCF-40 Order No. 3016977-040 (Mounts only)

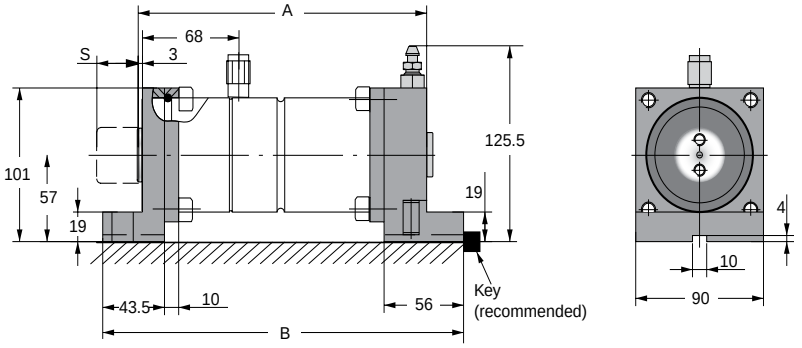

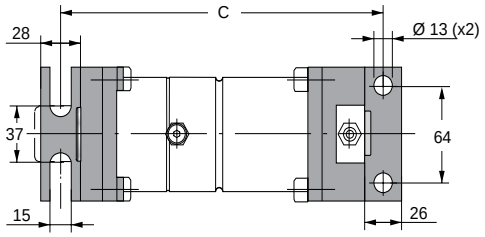

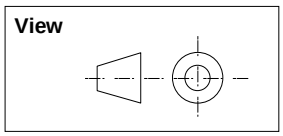

Model	A	B	C
HCF-40x25	195	246	219
HCF-40x50	245	296	269
HCF-40x100	345	396	369
HCF-40x150	445	496	469

HCF-SP-40 Force Cylinder with Side Port Plate

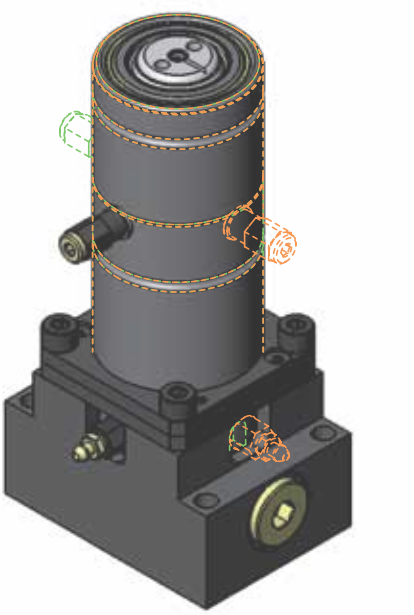

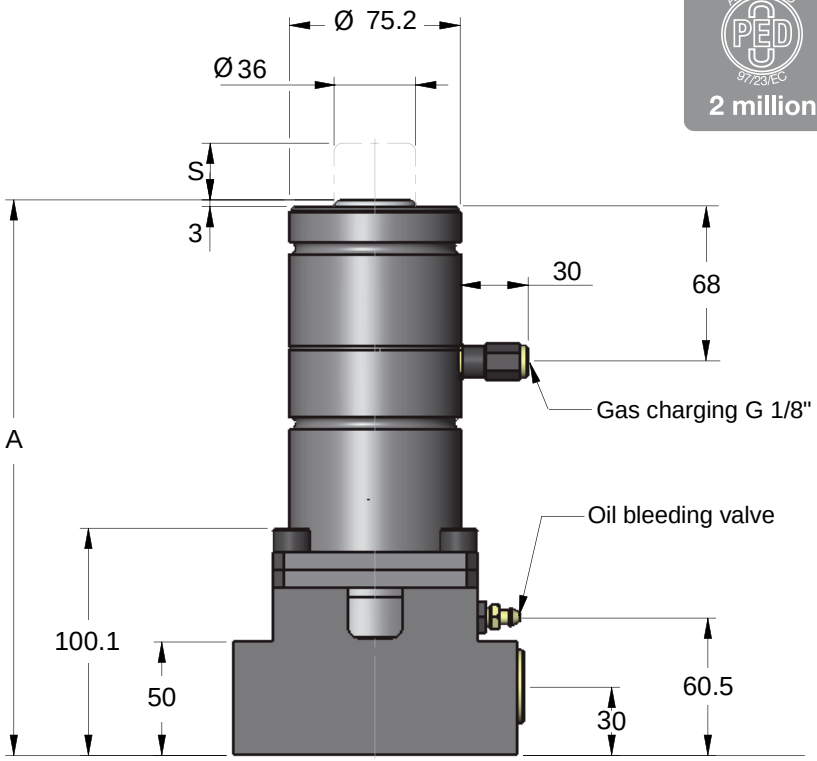

Note: External stop is recommended for the tool (5-10 mm above cylinder) to avoid high load on the cylinder during the return stroke. See picture on page 7.

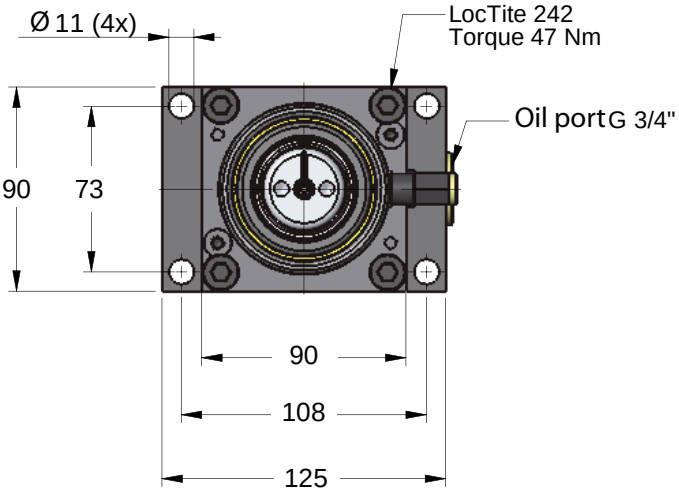

Order No.	Working force* (kN)	Return force (kN)	Stroke S (mm)	A	Weight [kg]
HCF-SP-40x25	40	4	25	245	10.3
HCF-SP-40x50	40	4	50	295	11.3
HCF-SP-40x100	40	4	100	395	13.4
HCF-SP-40x150	40	4	150	495	15.4

*= Nominal force for the operation

1-800-876-4976 • 440-526-5900 • FAX: 440-526-6807 • www.hysonproducts.com
© Hyson Products 2013

HCPU-60 Power Unit

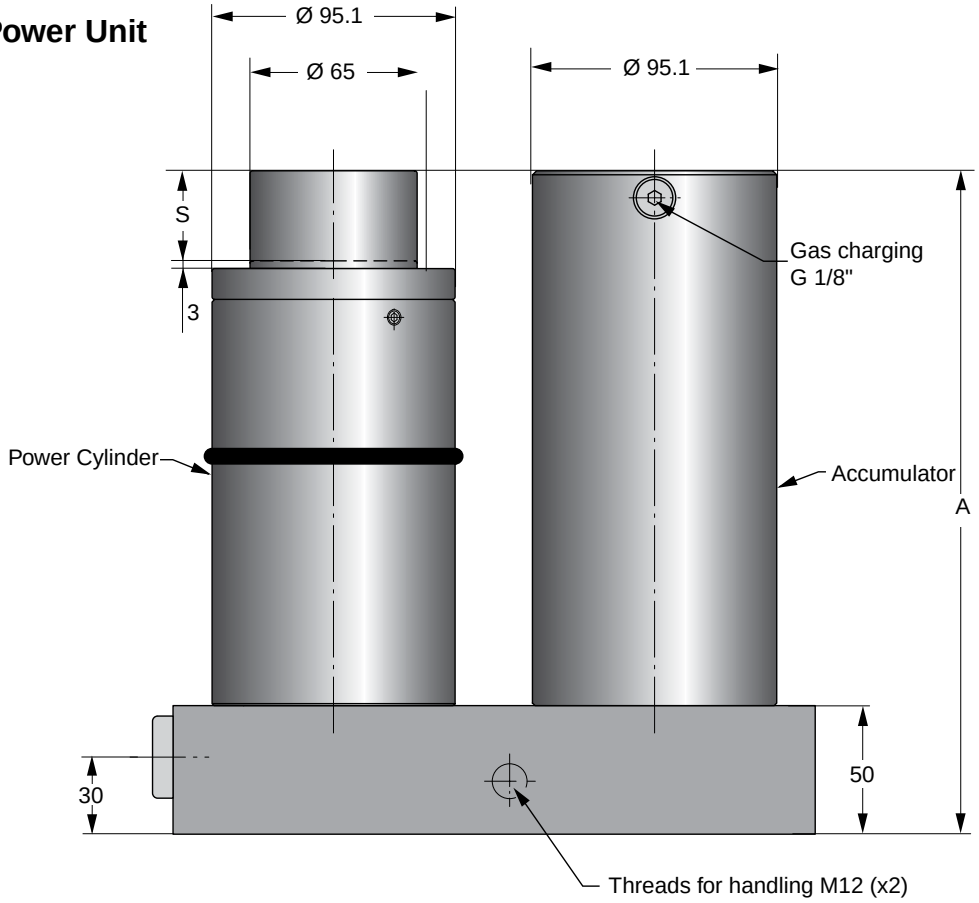

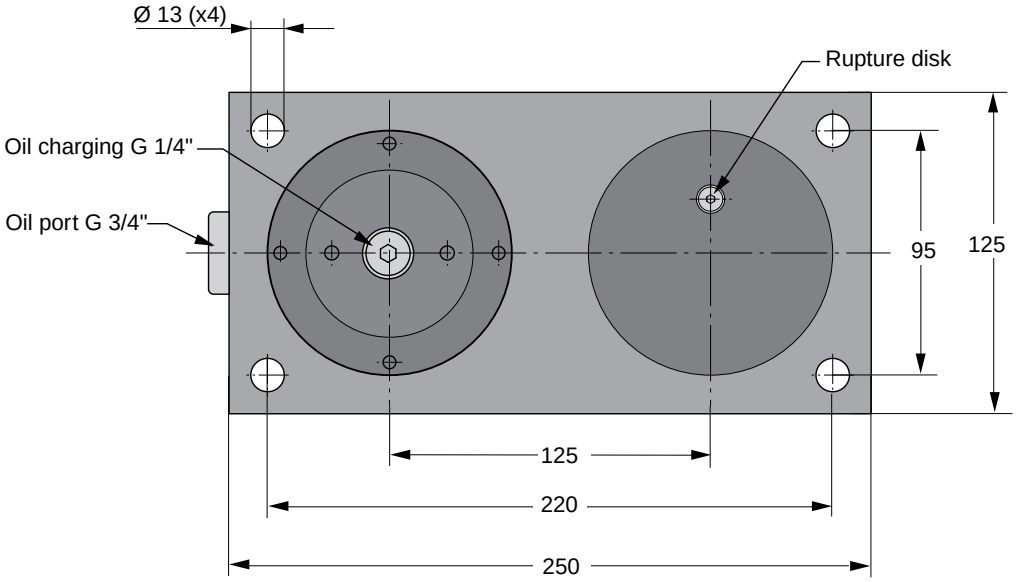

Order No.	Force (kN)	Stroke S (mm)	A	Weight (kg)
HCPU-60x35	60	35	258	26.7
HCPU-60x60	60	60	308	28.4
HCPU-60x110	60	110	408	32.2
HCPU-60x160	60	160	508	35.9

View

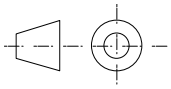

HCPU-S-60 Power Unit, with Separate Accumulator

APPROVED PED 97/23/EC
2 million

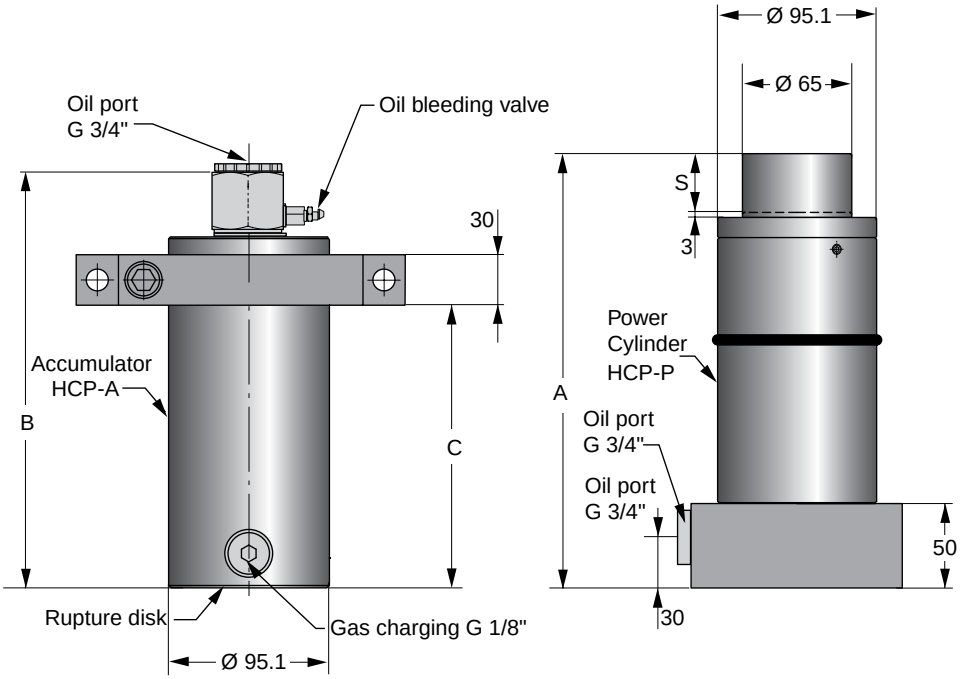

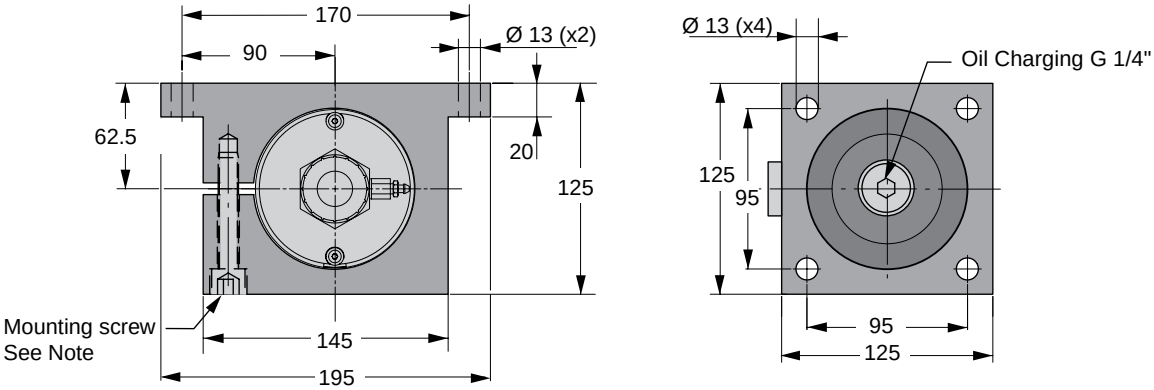

Note: The mounting screw (M12) should be tightened with torque 91Nm

Order No. Complete Power Unit HCPU-S	Weight (kg)	Force (kN)	Stroke S (mm)	A	B	C	Order No. Separate Power Cylinder HCPU-P	Weight (kg)	Order No. Separate Accumulator HCPU-A	Weight (kg)
HCPU-S-60x35	23.9	60	35	258	247	168	HCPU-P-60x35	13.9	HCPU-A-60x35	10.0
HCPU-S-60x60	25.7	60	60	308	297	218	HCPU-P-60x60	14.8	HCPU-A-60x60	10.9
HCPU-S-60x110	29.4	60	110	408	397	318	HCPU-P-60x110	16.9	HCPU-A-60x110	12.5
HCPU-S-60x160	33.1	60	160	508	497	418	HCPU-P-60x160	19.0	HCPU-A-60x160	14.1

View

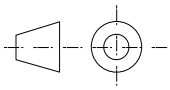

1-800-876-4976 • 440-526-5900 • FAX: 440-526-6807 • www.hysonproducts.com
© Hyson Products 2013

HCCU-60 Compact Cam

APPROVED PED 97/23/EC
2 million

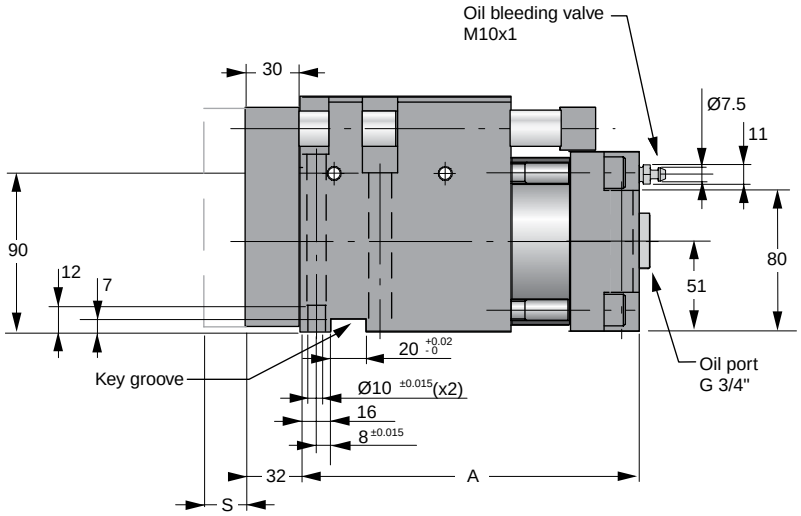

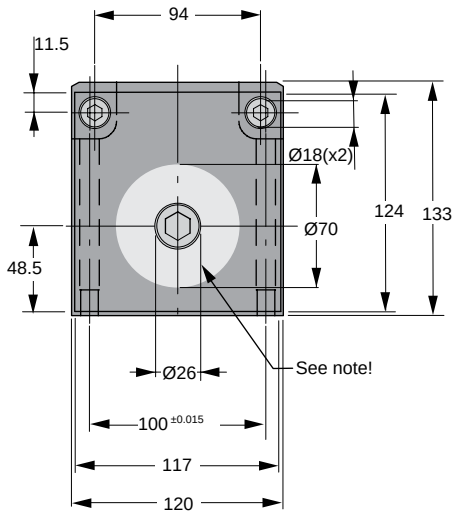

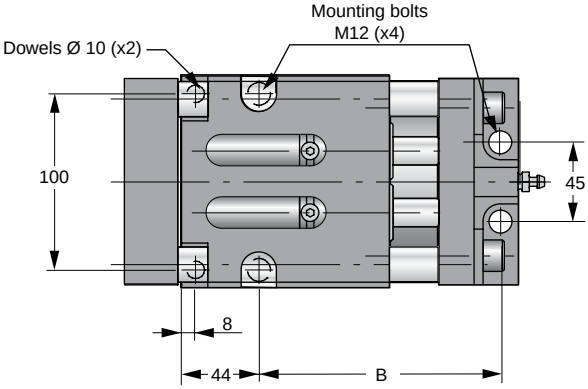

Note:
Important installation information:
We recommend locating the punch in the center of the piston rod, but it is also possible to locate the force which the punch will create in the operations within the area marked .

When piercing an opened hole or cutting an edge, we recommend that extra guiding is used to protect the unit against sideload.

View

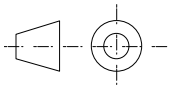

Order No.	Working force* (kN)	Return force (kN)	Stroke S (mm)	A	B	Weight (kg)
HCCU-60x24	60	7	24	191	137	22.3
HCCU-60x49	60	7	49	216	162	23.4
HCCU-60x99	60	7	99	266	212	26.0

* Nominal force available for the operation

© Hyson Products 2013

HCCH-60 Compact Cam for pressure control

APPROVED PED 97/23/EC 2 million

This version can only be used together with a hosed system, as there are no gas charging valve in the springs or adapters. There are two G 1/8" gas ports which can be used to connect to a hose system. Use only one of these to connect the hose system; the other should remain plugged.

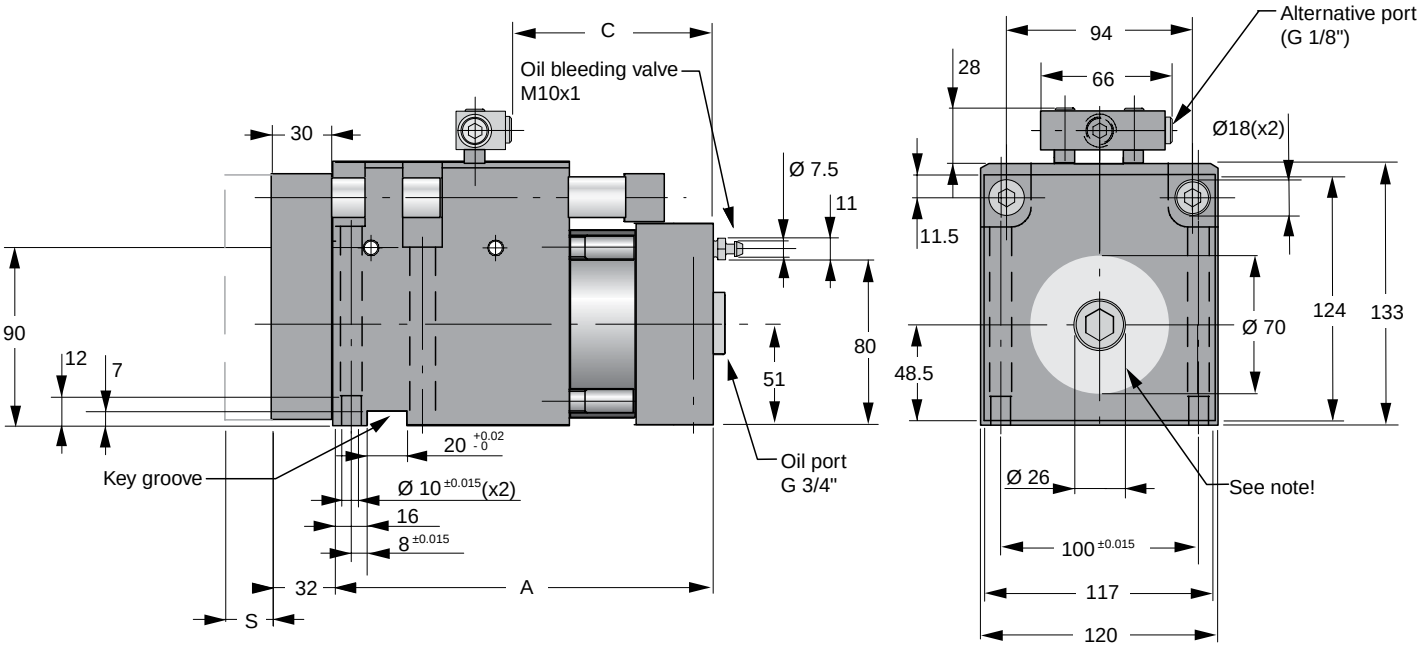

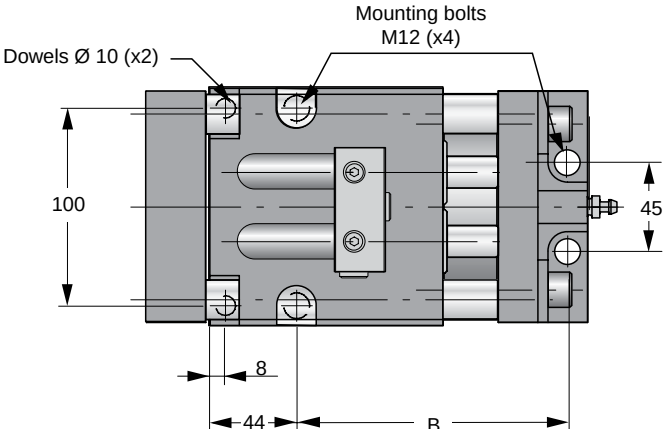

Note: Important installation information:
We recommend locating the punch in the center of the piston rod, but it is also possible to locate the force which the punch will create in the operations within the area marked .

When piercing an opened hole or cutting an edge we recommend that extra guiding is used to protect the unit against sideload.

Order No.	Working force* (kN)	Return force (kN)	Stroke S (mm)	A	B	C	Weight (kg)
HCCH-60x24	60	7	24	191	137	103	22.5
HCCH-60x49	60	7	49	216	162	153	23.6
HCCH-60x99	60	7	99	266	212	228	26.2

* = Nominal force available for the operation

View

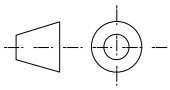

1-800-876-4976 • 440-526-5900 • FAX: 440-526-6807 • www.hysonproducts.com
© Hyson Products 2013

HCF-60 Force Cylinder

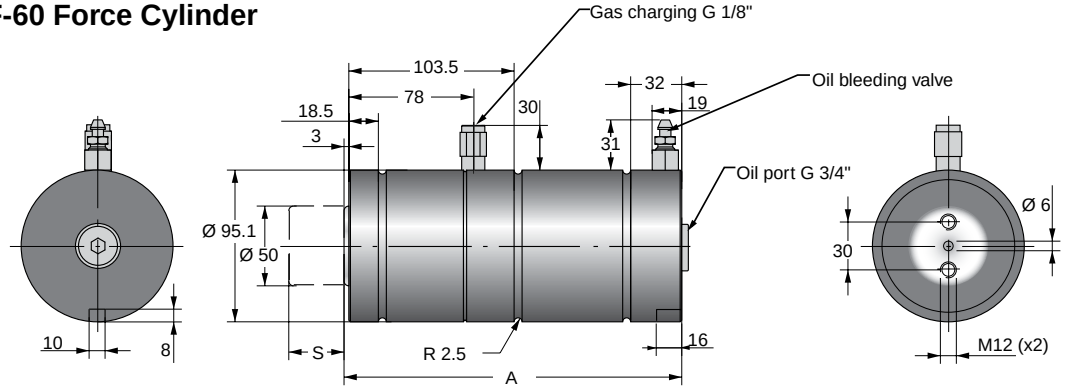

APPROVED PED 97/23/EC
2 million

Note: External stop is recommended for the tool (5-10 mm above cylinder) to avoid high load on the cylinder during the return stroke. See picture on page 7.

Order No.	Working force* (kN)	Return force (kN)	Stroke S (mm)	A	Weight (kg)
HCF-60x25	60	6	25	211	9.8
HCF-60x50	60	6	50	261	11.6
HCF-60x100	60	6	100	361	15.1
HCF-60x150	60	6	150	461	18.6

* = Nominal force available for the operation

Flange mount for HCF-60 Order No. 2014677-3000 (Mount only)

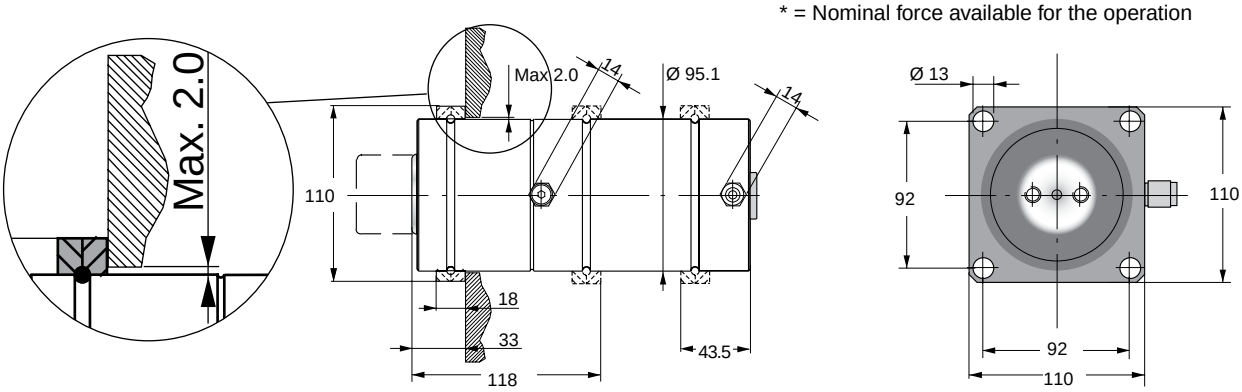

Foot mount for HCF-60 Order No. 3016977-060 (Mounts only)

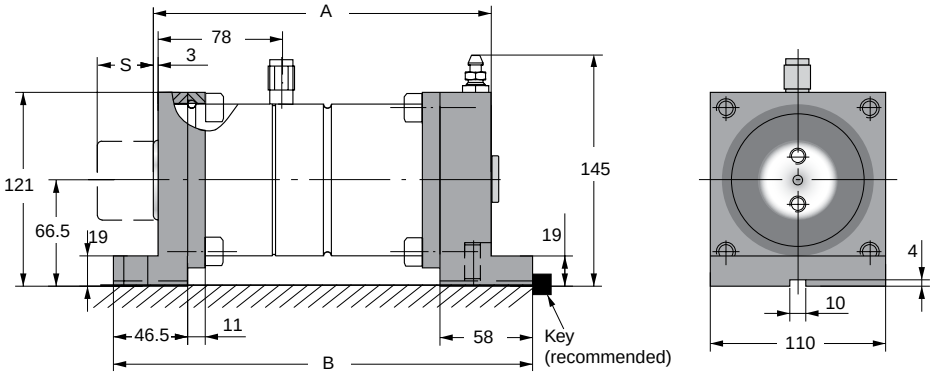

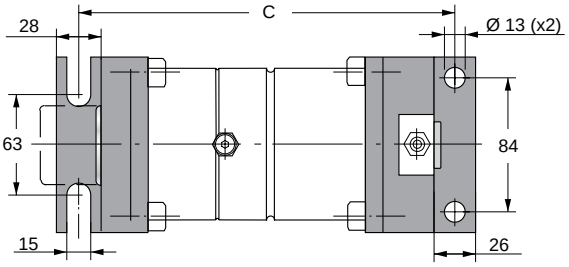

View

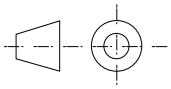

Model	A	B	C
HCF-60x25	211	262	235
HCF-60x50	261	312	285
HCF-60x100	361	412	385
HCF-60x150	461	512	485

HCF-SP-60 Force Cylinder with Side Port Plate

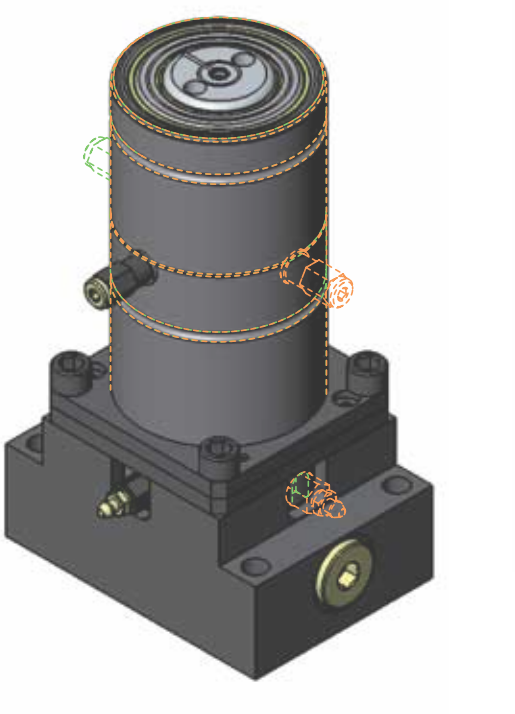

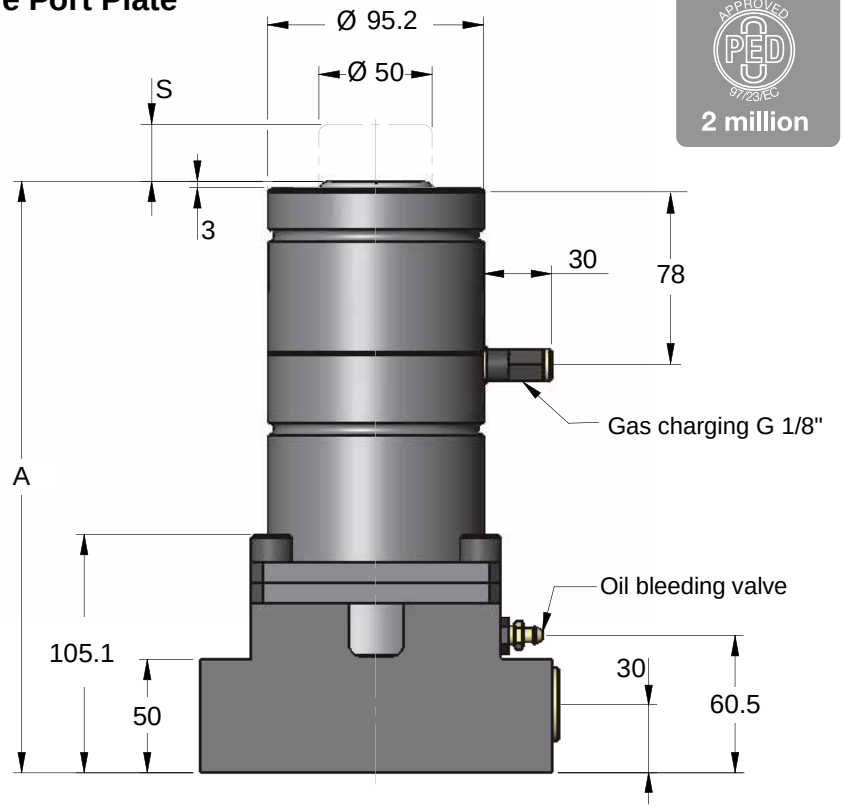

Note: External stop is recommended for the tool (5-10 mm above cylinder) to avoid high load on the cylinder during the return stroke. See picture on page 7.

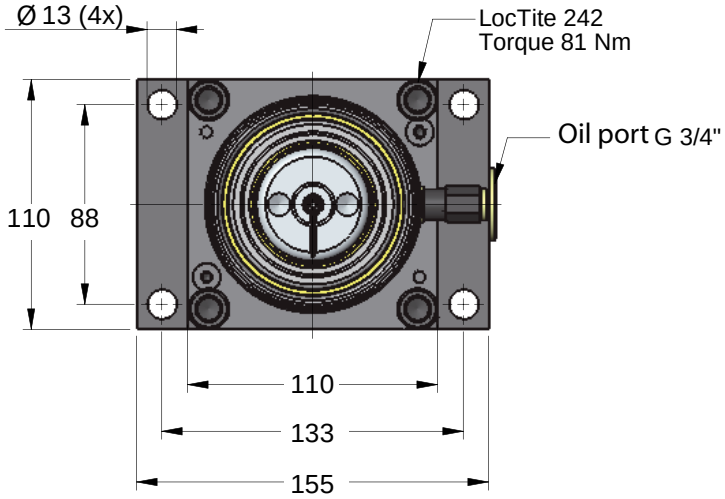

Order No.	Working force* (kN)	Return force (kN)	Stroke S (mm)	A	Weight [kg]
HCF-SP-60x25	60	6	25	261	17.4
HCF-SP-60x50	60	6	50	311	19.2
HCF-SP-60x100	60	6	100	411	22.7
HCF-SP-60x150	60	6	150	511	26.2

*= Nominal force for the operation

1-800-876-4976 • 440-526-5900 • FAX: 440-526-6807 • www.hysonproducts.com
© Hyson Products 2013

HCPU-90 Power Unit

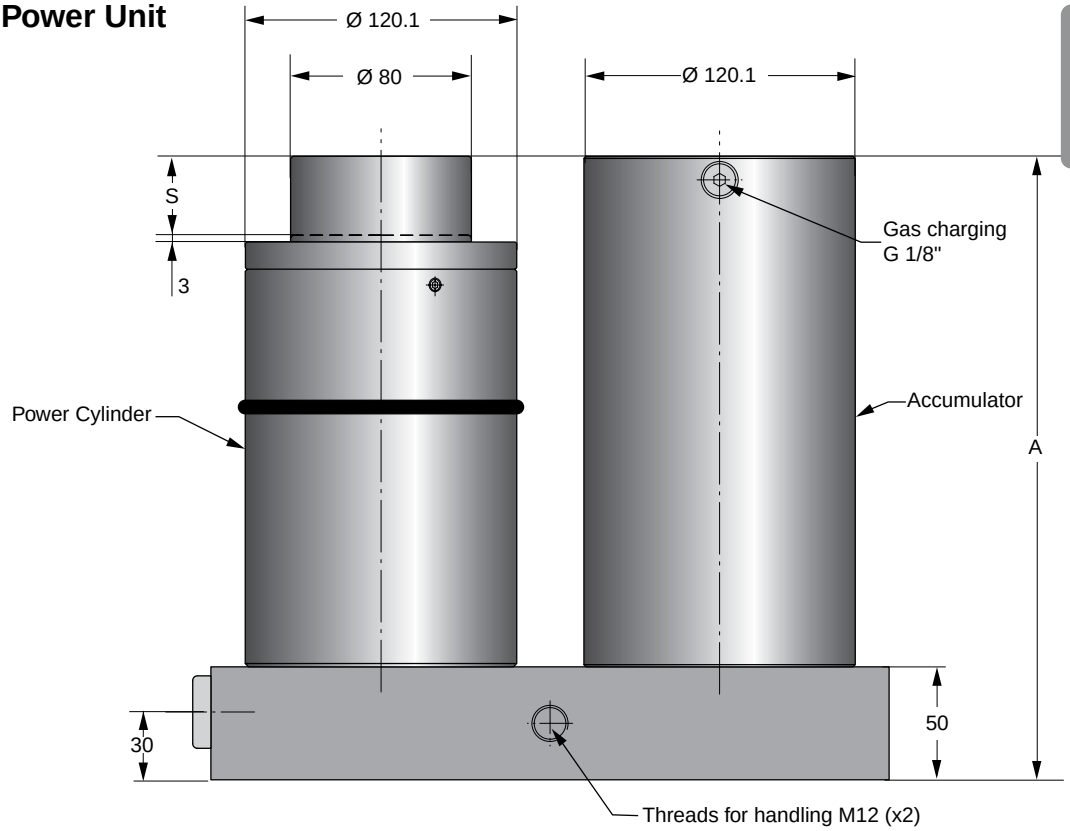

APPROVED PED 97/23/EC
2 million

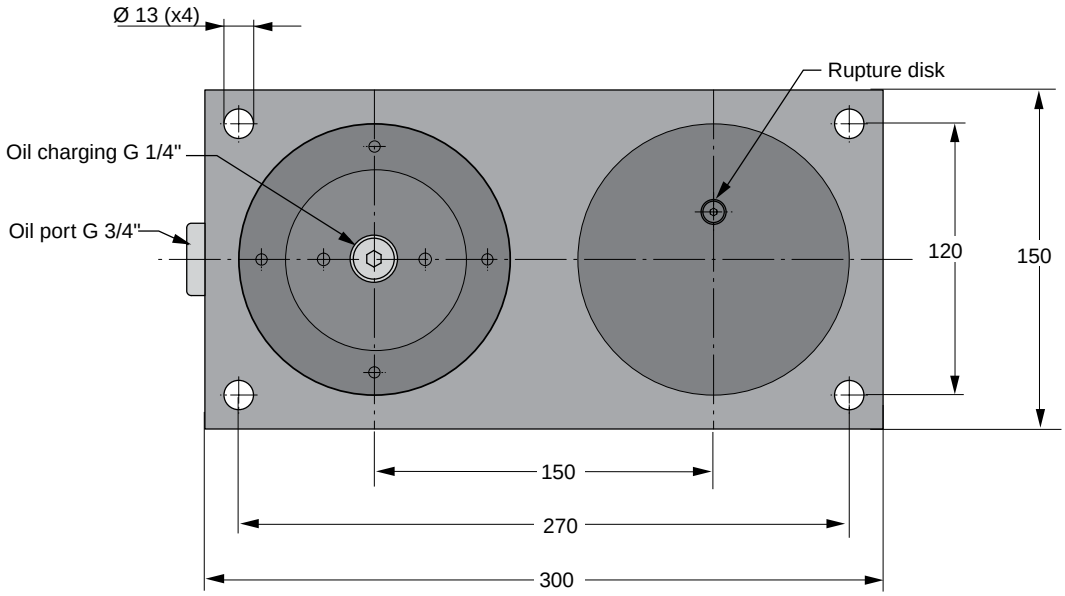

View

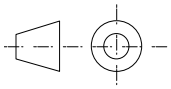

Order No.	Force (kN)	Stroke S (mm)	A	Weight (kg)
HCPU-90x35	90	35	276	43.1
HCPU-90x60	90	60	326	46.1
HCPU-90x110	90	110	426	52.1
HCPU-90x160	90	160	526	52.8

HCPU-S-90 Power Unit, with Separate Accumulator

APPROVED PED 97/23/EC 2 million

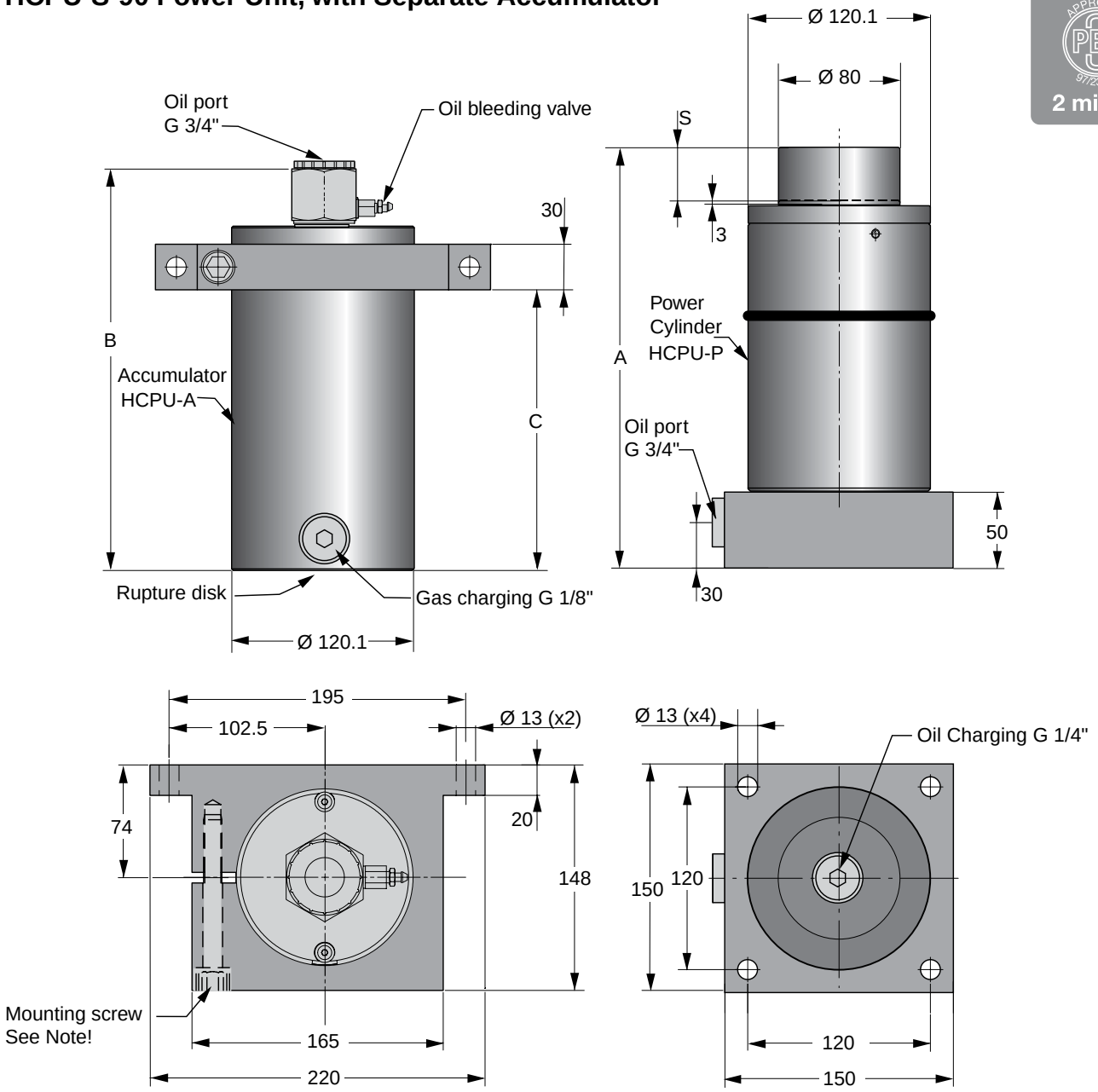

Note: The mounting screw (M12) should be tightened with torque 91Nm

Order No. Complete Power Unit HCPU-S	Weight (kg)	Force (kN)	Stroke S (mm)	A	B	C	Order No. Separate Power Cylinder HCPU-P	Weight (kg)	Order No. Separate Accumulator HCPU-A	Weight (kg)
HCPU-S-90x35	38.3	90	35	276	265	186	HCPU-P-90x35	22.6	HCPU-A-90 x35	15.7
HCPU-S-90x60	41.2	90	60	326	315	236	HCPU-P-90x60	24.2	HCPU-A-90x60	17.0
HCPU-S-90x110	47.3	90	110	426	415	336	HCPU-P-90x110	27.5	HCPU-A-90x110	19.8
HCPU-S-90x160	53.3	90	160	526	514	436	HCPU-P-90x160	30.8	HCPU-A-90x160	22.5

View

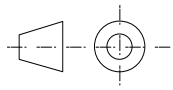

Note: The Accumulator should always be used in the system.

1-800-876-4976 • 440-526-5900 • FAX: 440-526-6807 • www.hysonproducts.com
© Hyson Products 2013

HCCU-90 Compact Cam

APPROVED PED 97/23/EC
2 million

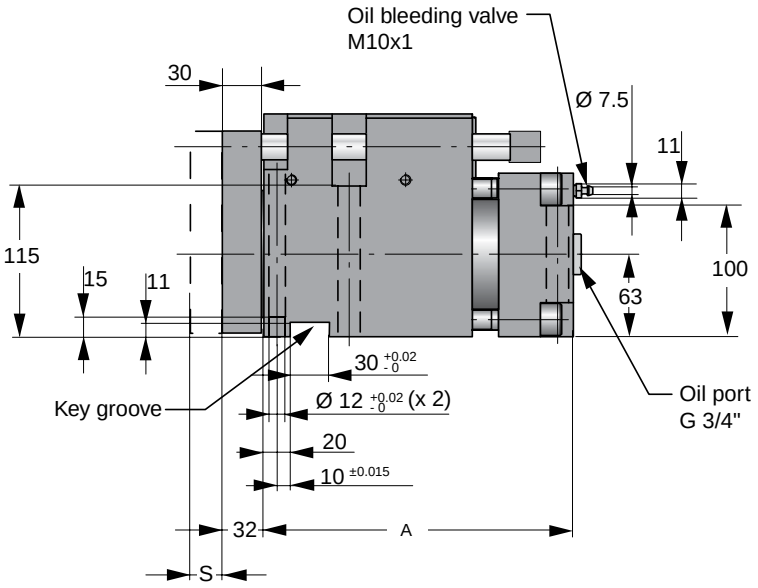

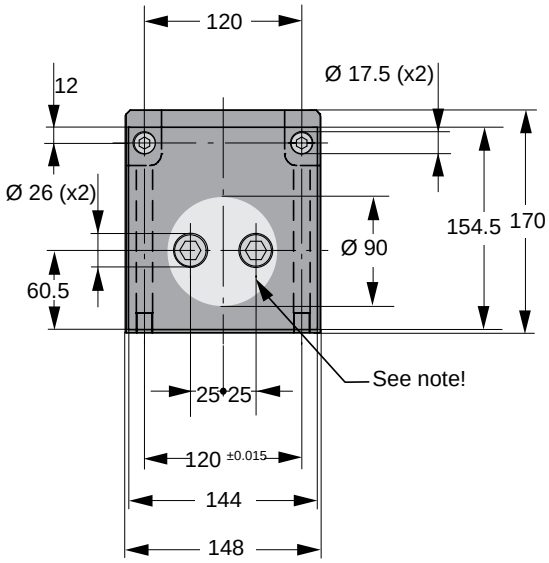

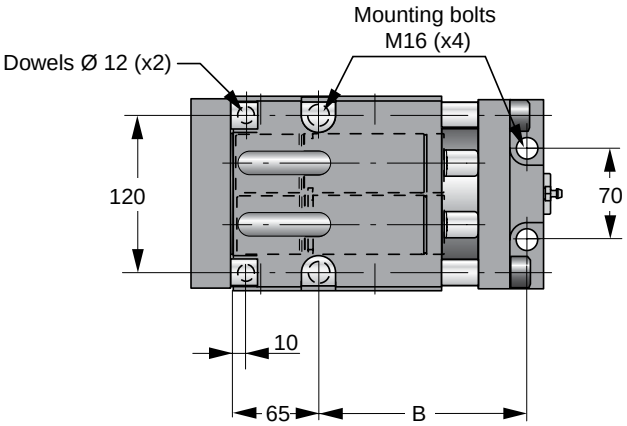

Note: Important installation information:
We recommend locating the punch in the center of the piston rod, but it is also possible to locate the force which the punch will create in the operations within the area marked

When piercing an opened hole or cutting an edge, we recommend that extra guiding is used to protect the unit against sideload.

View

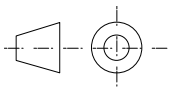

Order No.	Working force* (kN)	Return force (kN)	Stroke S (mm)	A	B	Weight (kg)
HCCU-90x24	90	10	24	236	159	33.5
HCCU-90x49	90	10	49	261	184	39.7
HCCU-90x99	90	10	99	311	234	44.9

* = Nominal force available for the operation

HCCH-90 Compact Cam for pressure control

APPROVED PED 97/23/EC 2 million

This version can only be used together with a hosed system, as there are no gas charging valves in the springs or adapters. There are two G1/8" gas ports which can be used to couple to a hose system. Use only one of these to connect the hose system, the other should remain plugged.

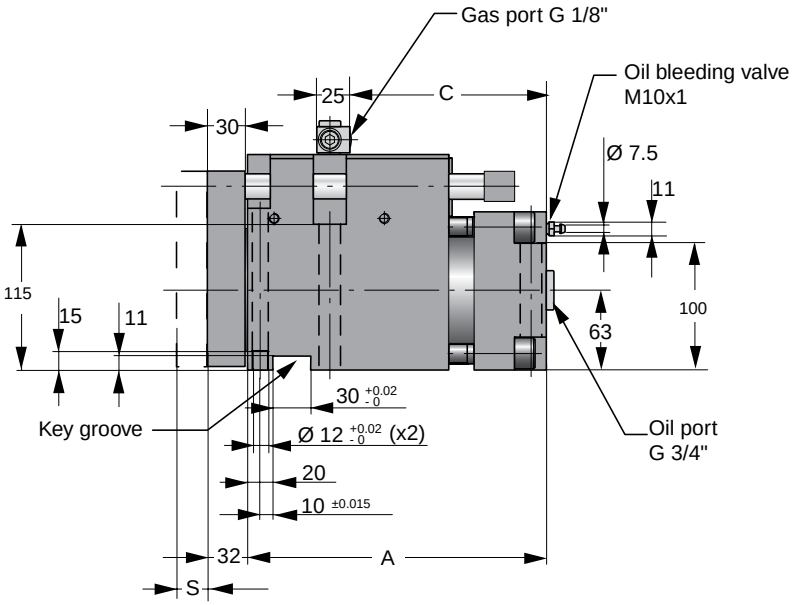

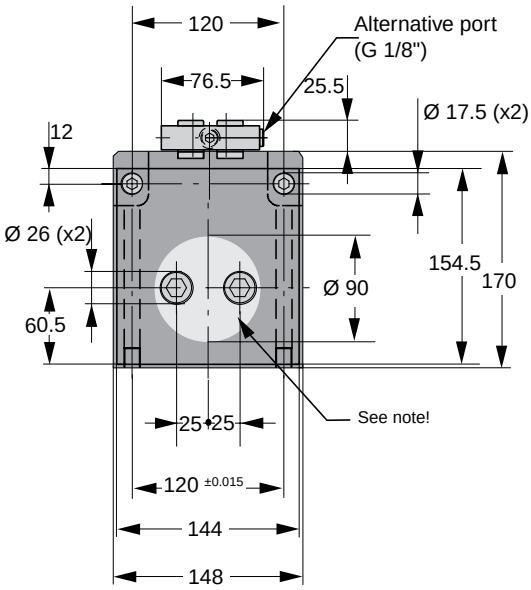

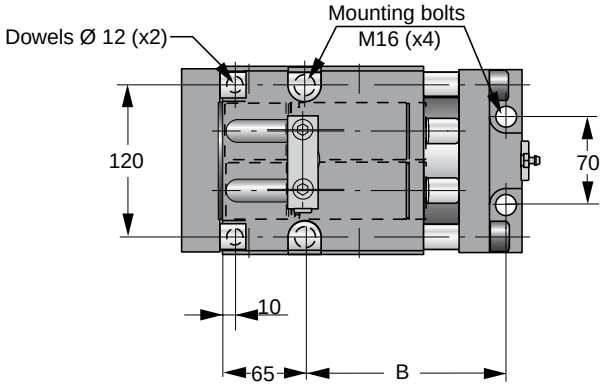

Note:
Important installation information:
We recommend locating the punch in the center of the piston rod, but it is also possible to locate the force which the punch will create in the operations within the area marked .

When piercing an opened hole or cutting an edge, we recommend that extra guiding is used to protect the unit against sideload.

Order No.	Working force* (kN)	Return force (kN)	Stroke S (mm)	A	B	C	Weight (kg)
HCCH-90x24	90	10	24	236	159	158	33.7
HCCH-90x49	90	10	49	261	184	208	39.7
HCCH-90x99	90	10	99	311	234	283	44.9

* = Nominal force available for the operation

View

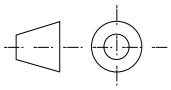

1-800-876-4976 • 440-526-5900 • FAX: 440-526-6807 • www.hysonproducts.com
© Hyson Products 2013

HCF-90 Force Cylinder

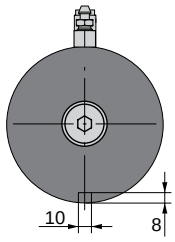

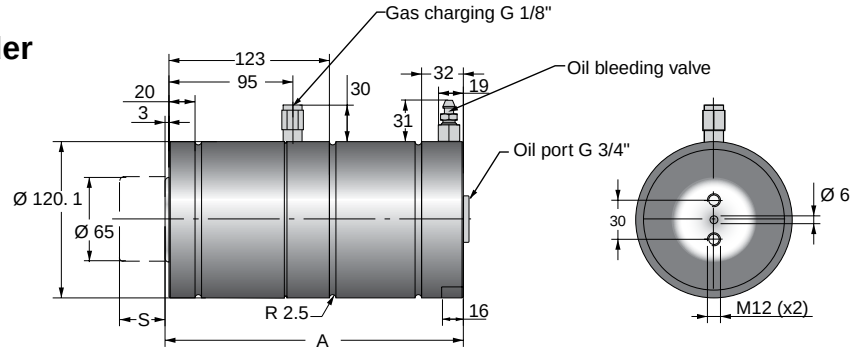

APPROVED PED 97/23/EC 2 million

Note: External stop is recommended for the tool (5-10 mm above cylinder) to avoid high load on the cylinder during the return stroke. See picture on page 7.

Order No.	Working force* (kN)	Return force* (kN)	Stroke S (mm)	A	Weight (kg)
HCF-90x25	90	9	25	229	15.8
HCF-90x50	90	9	50	279	18.7
HCF-90x100	90	9	100	379	24.5
HCF-90x150	90	9	150	479	30.3

* = Nominal force for the operation

Flange mount for HCF-90 Order No. 2014677-5000 (Mount only)

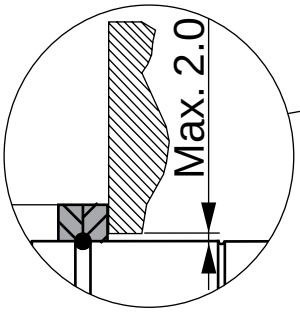

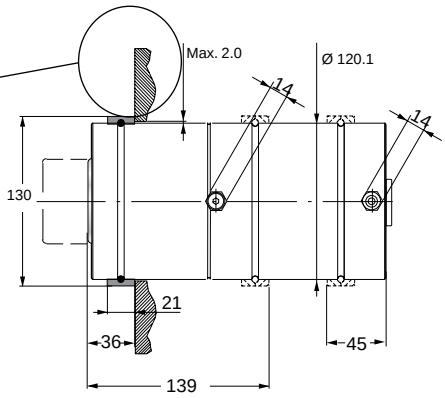

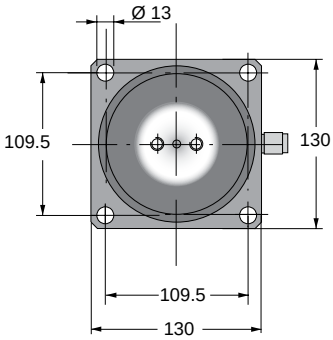

Foot mount for HCF-90 Order No. 3016977-090 (Mounts only)

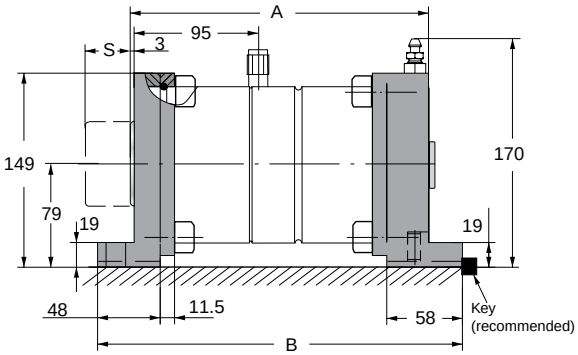

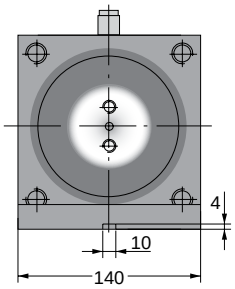

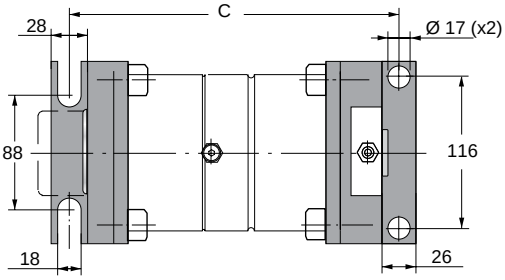

View

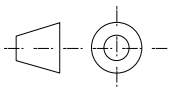

Model	A	B	C
HCF-90x25	229	280	254
HCF-90x50	279	330	304
HCF-90x100	379	430	404
HCF-90x150	479	530	504

HCF-SP-90 Force Cylinder with Side Port Plate

APPROVED PED 97/23/EC
2 million

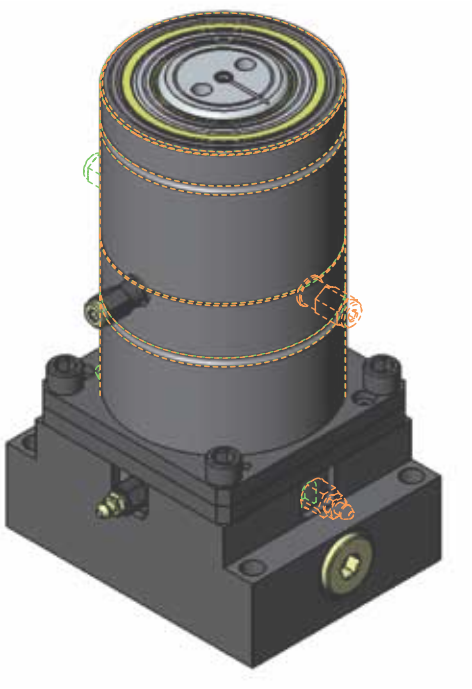

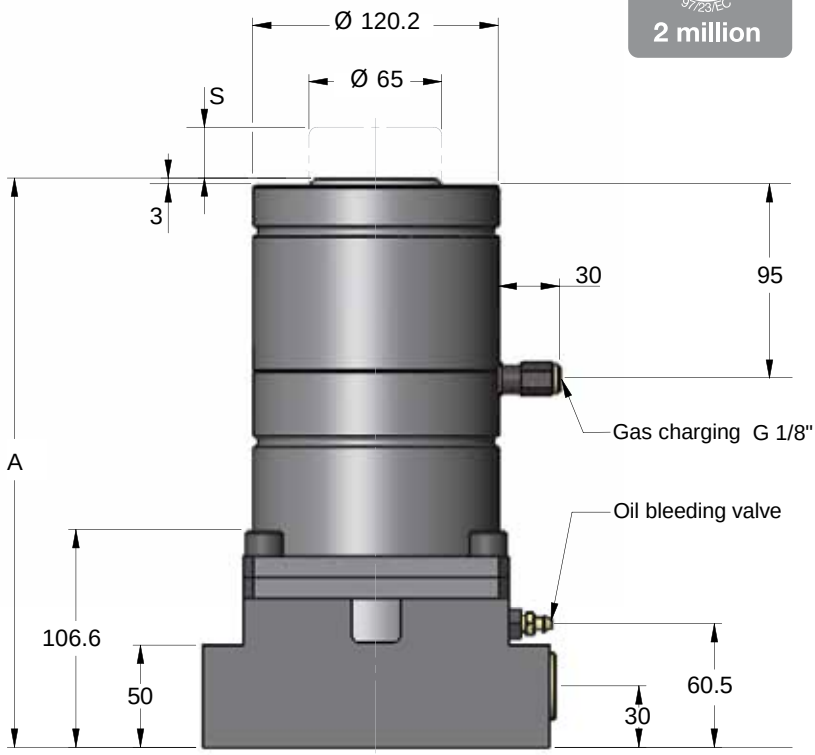

Note: External stop is recommended for the tool (5-10 mm above cylinder) to avoid high load on the cylinder during the return stroke. See picture on page 7.

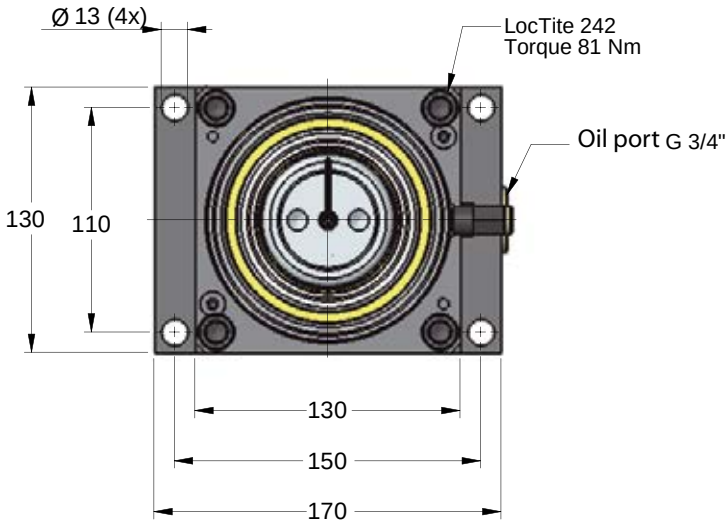

Order No.	Working force* (kN)	Return force (kN)	Stroke S (mm)	A	Weight [kg]
HCF-SP-90x25	90	9	25	279	28
HCF-SP-90x50	90	9	50	329	30.9
HCF-SP-90x100	90	9	100	429	36.8
HCF-SP-90x150	90	9	150	529	42.6

*= Nominal force for the operation

1-800-876-4976 • 440-526-5900 • FAX: 440-526-6807 • www.hysonproducts.com
© Hyson Products 2013

HCPU-150
Power Unit

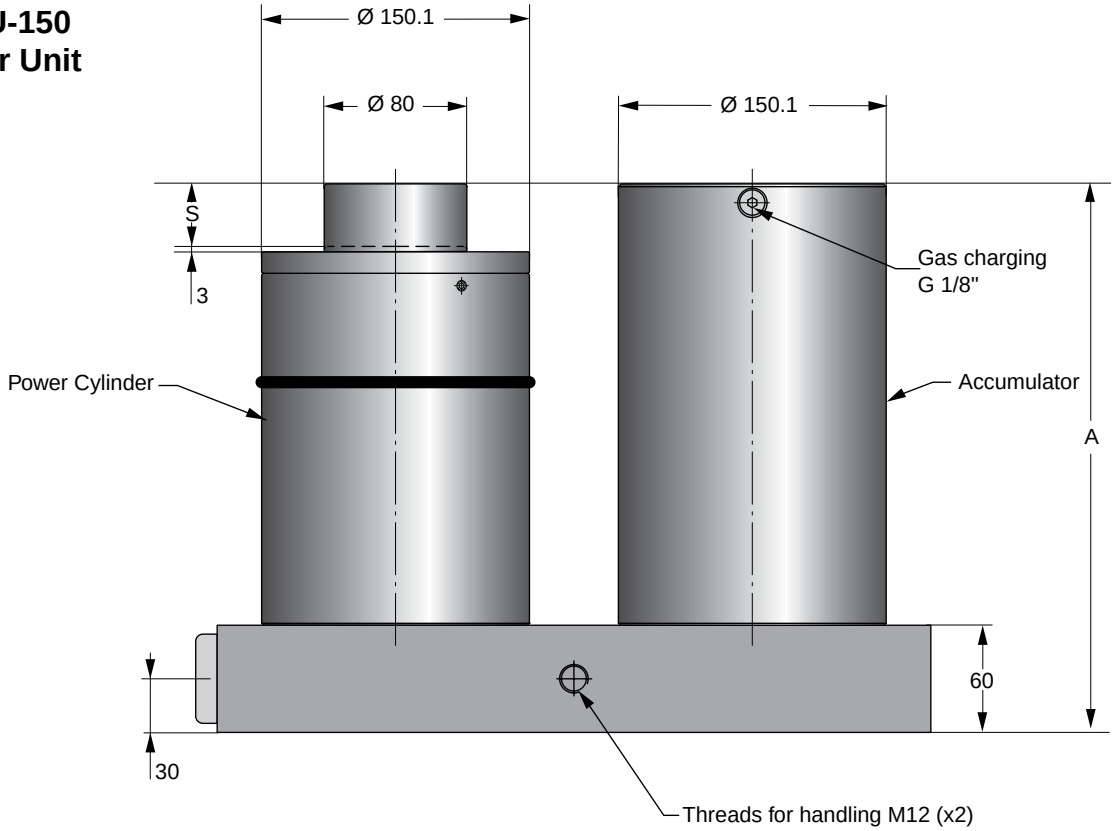

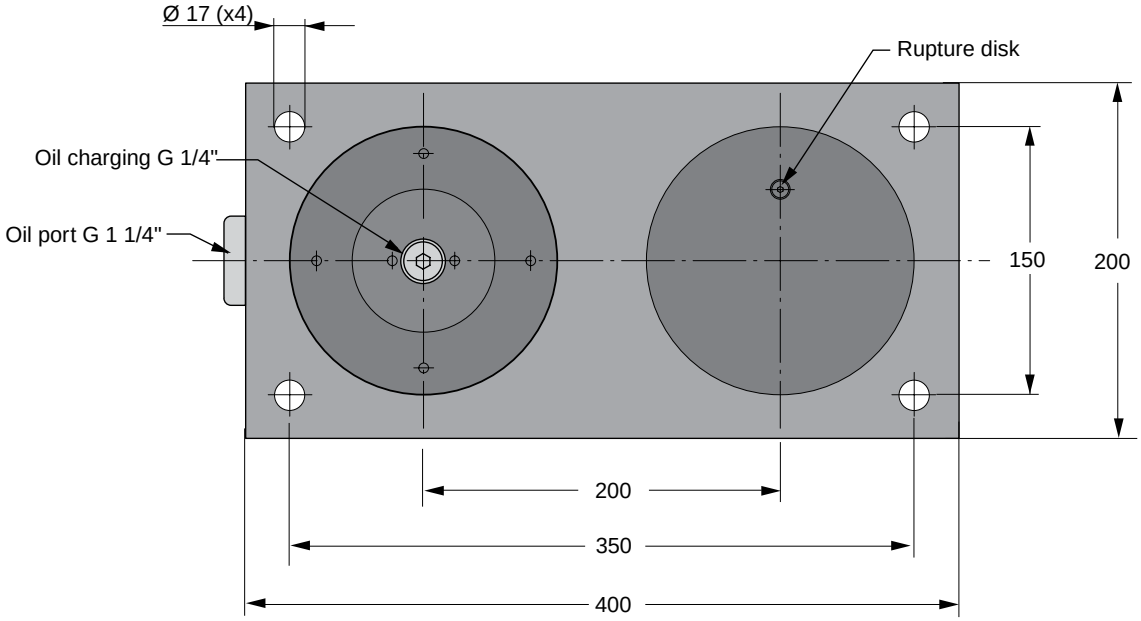

Order No.	Force (kN)	Stroke (mm)	A	Weight (kg)
HCPU-150x35	150	35	307	83.1
HCPU-150x60	150	60	357	87.7
HCPU-150x110	150	110	457	97.0
HCPU-150x160	150	160	557	106.3

View

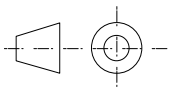

HCPU-S-150 Power Unit, with Separate Accumulator

APPROVED PED 97/23/EC 2 million

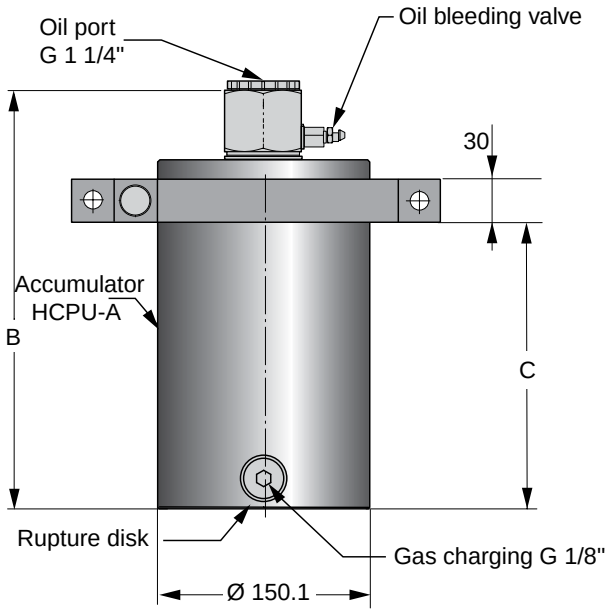

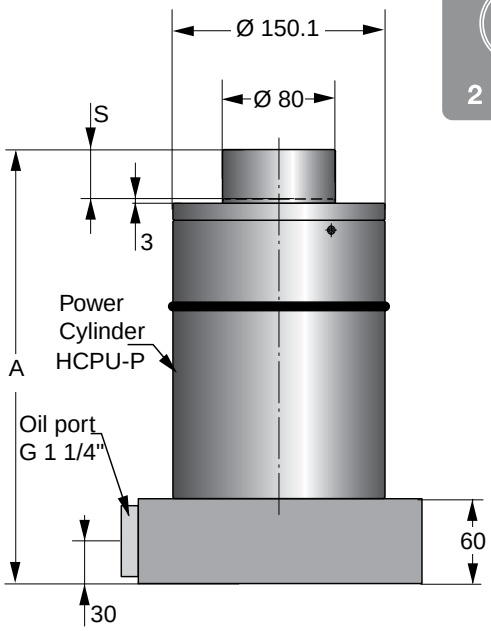

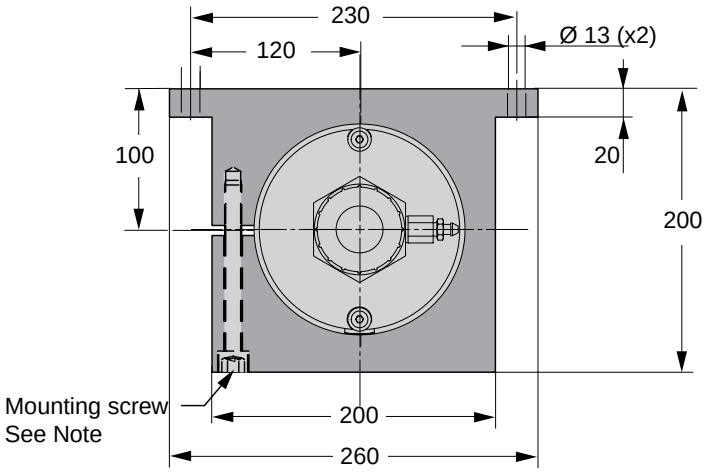

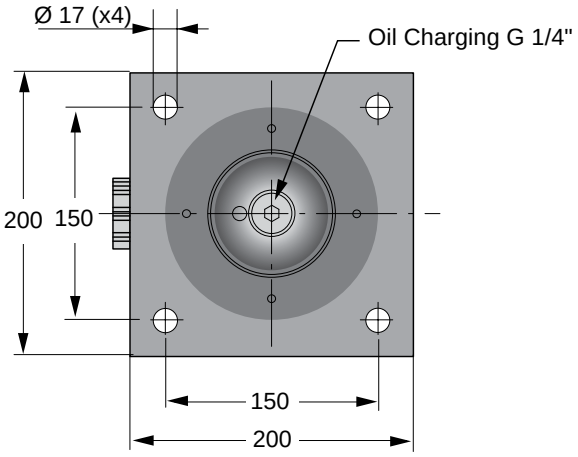

Note: The mounting screw (M12) should be tightened with torque 91Nm

Order No. Complete Power Unit HCPU-S	Weight (kg)	Force (kN)	Stroke S (mm)	A	B	C	Order No. Separate Power Cylinder HCPU-P	Weight (kg)	Order No. Separate Accumulator HCPU-A	Weight (kg)
HCPU-S-150x35	71.1	90	35	307	294	207	HCPU-P-150x35	43.6	HCPU-A-150x35	27.7
HCPU-S-150x60	75.5	90	60	357	344	257	HCPU-P-150x060	45.9	HCPU-A-150x60	29.8
HCPU-S-150x110	85.0	90	110	457	444	357	HCPU-P-150 x110	50.9	HCPU-A-150x110	34.1
HCPU-S-150x160	94.3	90	160	557	544	457	HCPU-P-150x160	55.9	HCPU-A-150x160	38.4

View

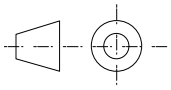

Note: The Accumulator should always be used in the system.

1-800-876-4976 • 440-526-5900 • FAX: 440-526-6807 • www.hysonproducts.com
© Hyson Products 2013

HCCU-150 Compact Cam

APPROVED PED 97/23/EC
2 million

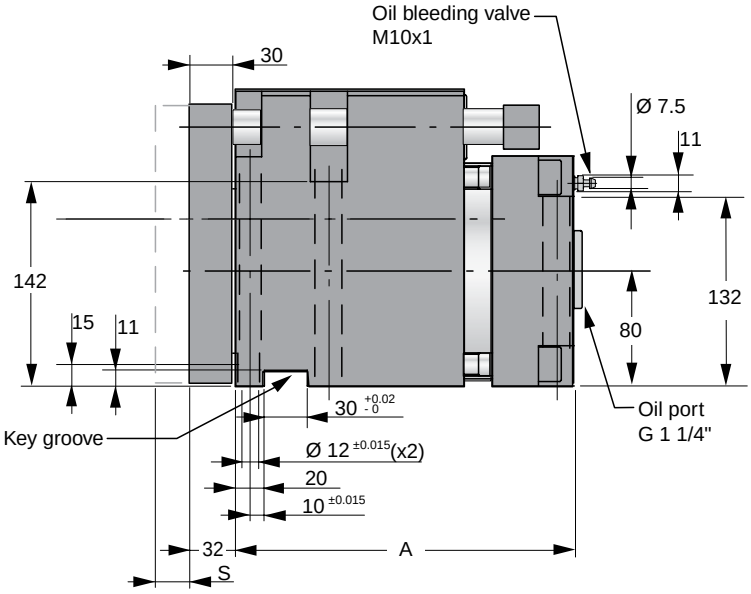

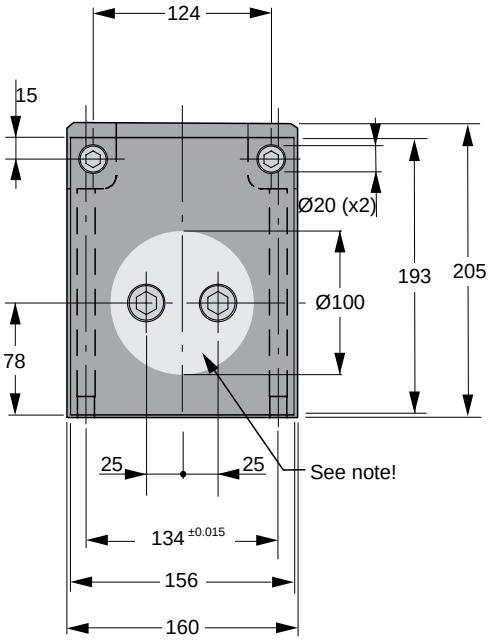

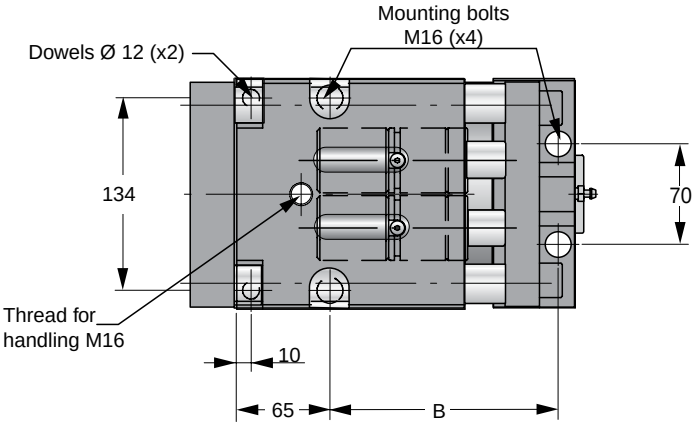

Note:
Important installation information:
We recommend locating the punch in the center of the piston rod, but it is also possible to locate the force which the punch will create in the operations within the area marked .

When piercing an opened hole or cutting an edge, we recommend that extra guiding is used to protect the unit against sideload.

View

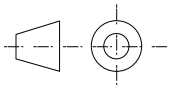

Order No.	Working force* (kN)	Return force (kN)	Stroke S (mm)	A	B	Weight (kg)
HCCU-150x24	150	15	24	236	159	57.7
HCCU-150x49	150	15	49	261	184	60.0
HCCU-150x99	150	15	99	311	234	65.6

* = Nominal force available for the operation

HCCH-150 Cam Unit for pressure control

APPROVED PED 97/23/EC 2 million

This version can only be used together with a hosed system, as there are no gas charging valves in the springs or adapters. There are two G 1/8" gas ports that can be used to connect the hose system. Use only one of these to connect the hose; the other should remain plugged.

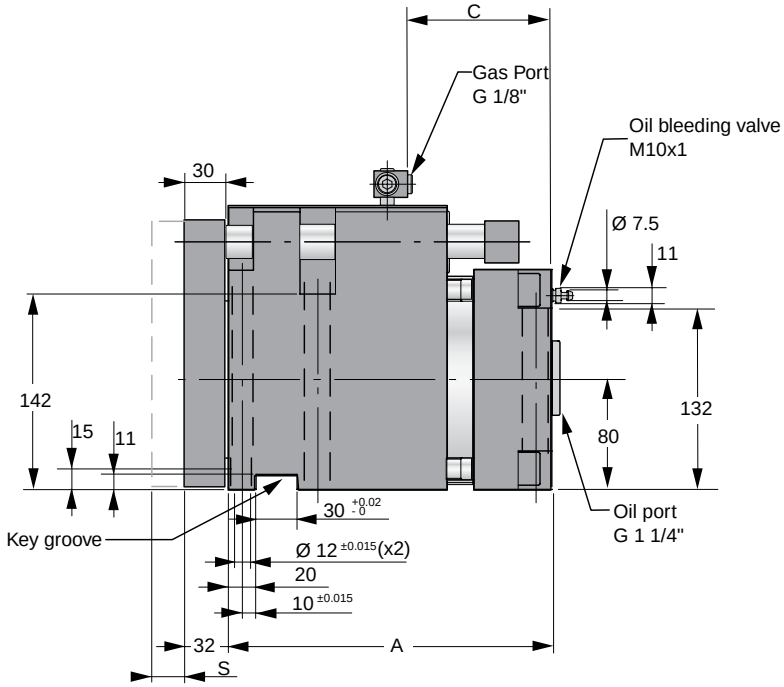

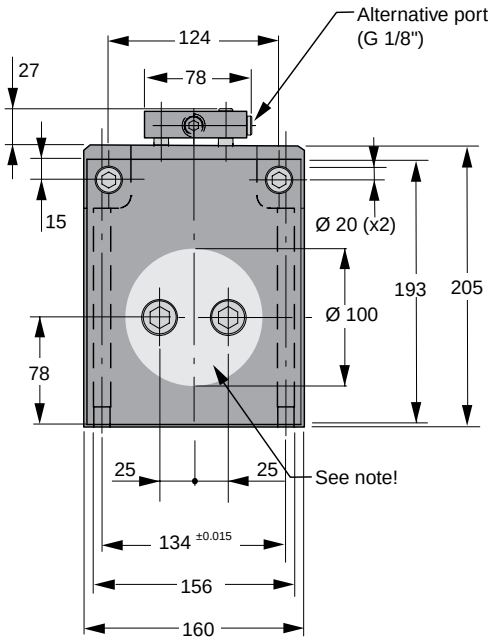

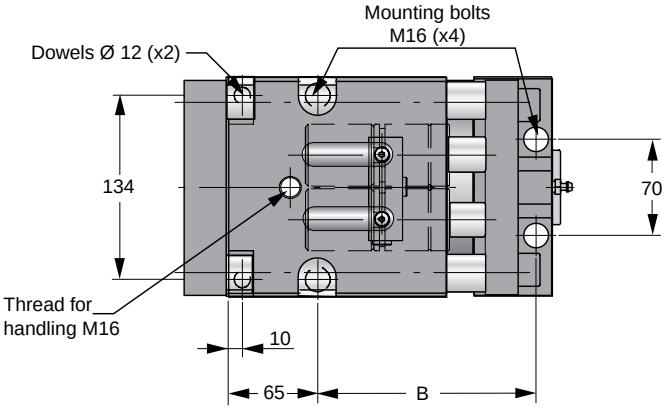

Note:
Important installation information:
We recommend locating the punch in the center of the piston rod, but it is also possible to locate the force which the punch will create in the operations within the area marked .

When piercing an opened hole or cutting an edge, we recommend that extra guiding is used to protect the unit against sideload.

Order No.	Working force* (kN)	Return force (kN)	Stroke S (mm)	A	B	C	Weight (kg)
HCCH-150x24	150	15	24	236	159	109	57.9
HCCH-150x49	150	15	49	261	184	159	60.2
HCCH-150x99	150	15	99	311	234	234	65.8

* = Nominal force available for the operation

View

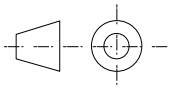

1-800-876-4976 • 440-526-5900 • FAX: 440-526-6807 • www.hysonproducts.com
© Hyson Products 2013

HCF-150 Force Cylinder

APPROVED PED 97/23/EC
2 million

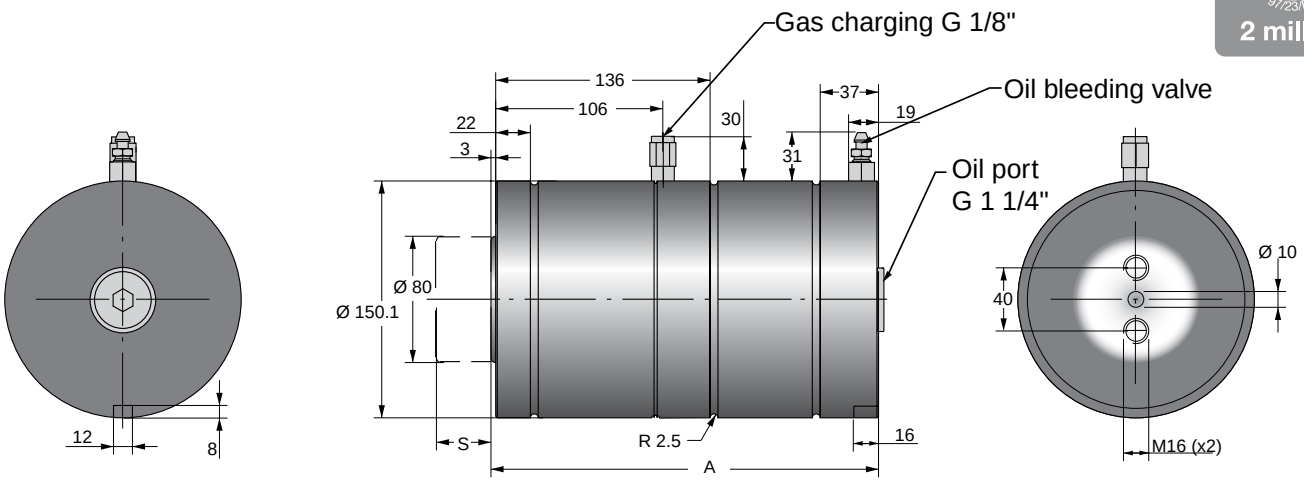

Note: External stop is recommended for the tool (5-10 mm above cylinder) to avoid high load on the cylinder during the return stroke. See picture on page 7.

Order No.	Working force* (kN)	Return force* (kN)	Stroke S (mm)	A	Weight (kg)
HCF-150x25	150	30	25	250	30.1
HCF-150x50	150	30	50	300	34.7
HCF-150x100	150	30	100	400	43.7
HCF-150x150	150	30	150	500	52.7

* = Nominal force for the operation

Flange mount for HCF-150 Order No. 2014677-7500

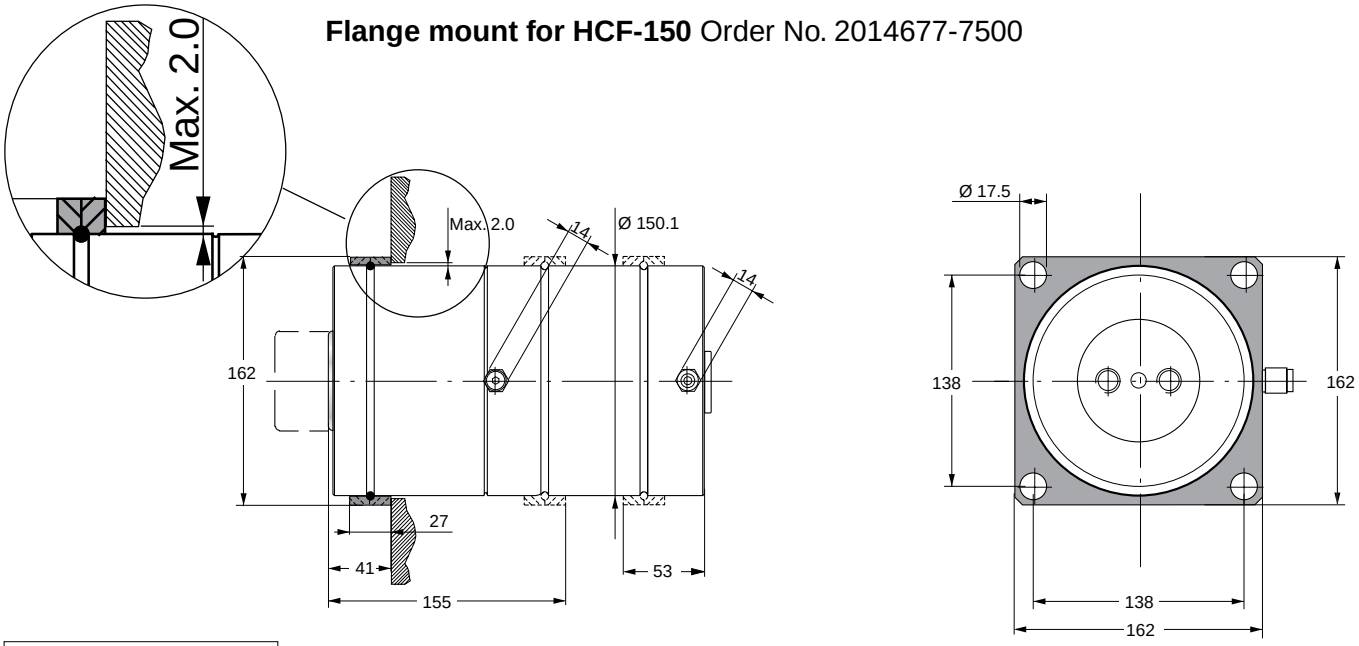

View

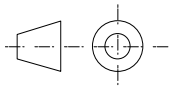

HCF-SP-150 Force Cylinder with Side Port Plate

APPROVED PED 97/23/EC
2 million

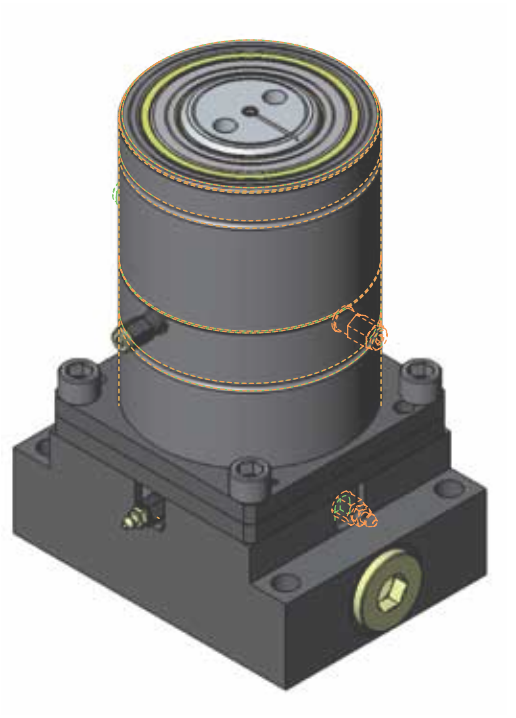

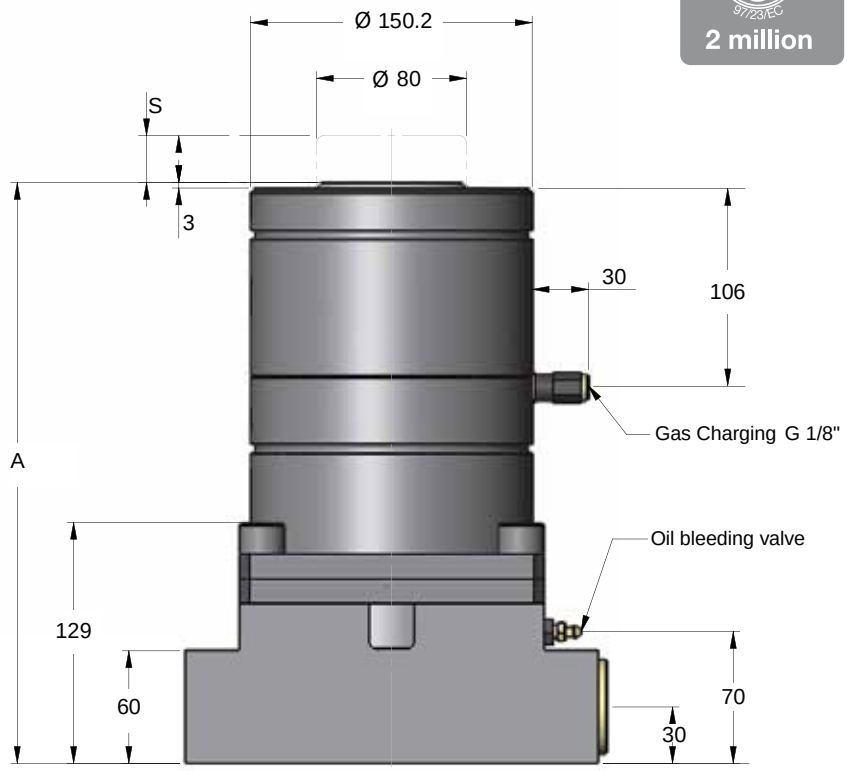

Note:
External stop is recommended for the tool (5-10 mm above cylinder) to avoid high load on the cylinder during the return stroke. See picture on page 7.

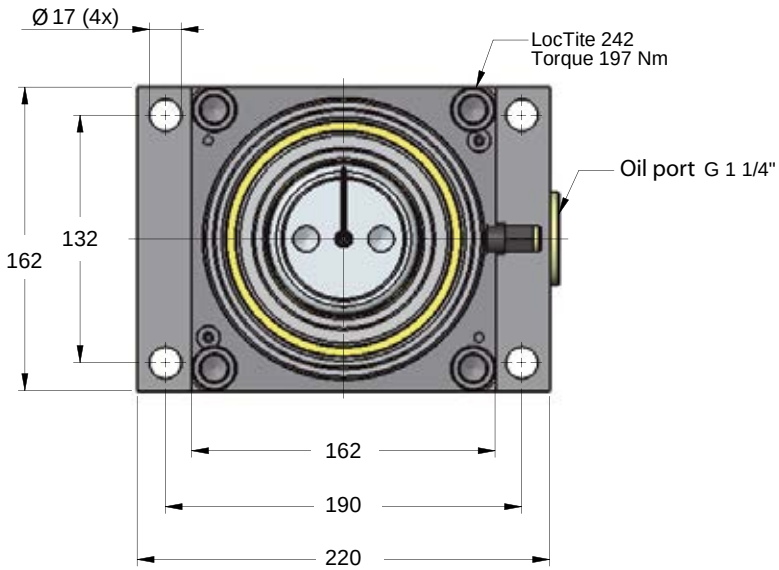

Order No.	Working force* (kN)	Return force (kN)	Stroke S (mm)	A	Weight [kg]
HCF-SP-150x25	150	14	25	310	48.6
HCF-SP-150x50	150	14	50	360	53.2
HCF-SP-150x100	150	14	100	460	62.2

*= Nominal force for the operation

1-800-876-4976 • 440-526-5900 • FAX: 440-526-6807 • www.hysonproducts.com
© Hyson Products 2013

Dimensions for accessories

Sensor kit, option for Compact Cam, HCCU and HCCH

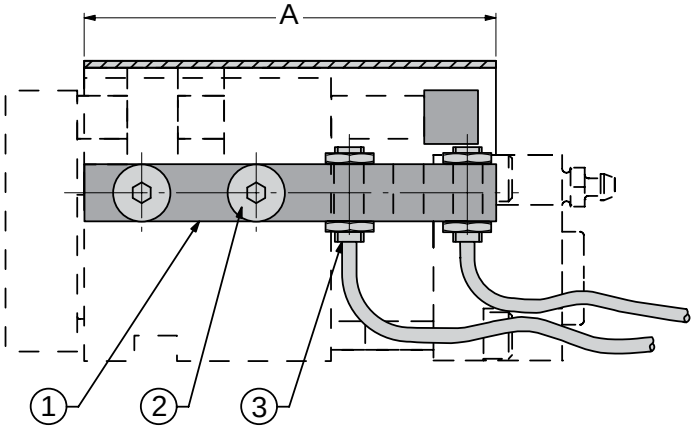

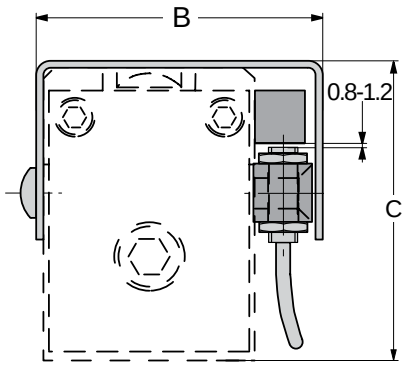

(See Note:)

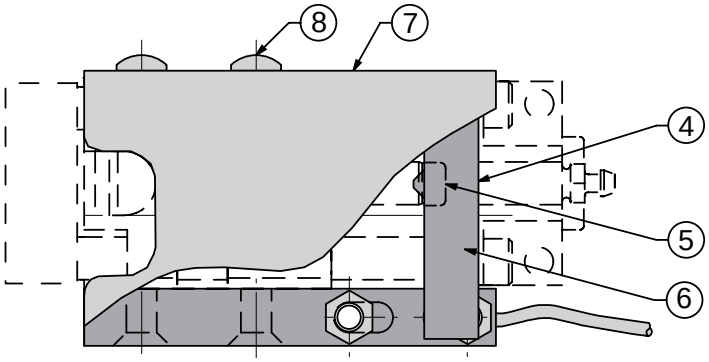

2 pcs sensors
Order No. 503550 (sold separately)

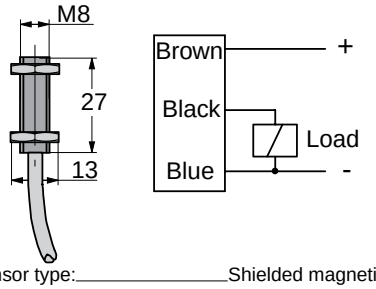

Sensor type:	Shielded magnetic
Output configuration:	NO (PNP)
Supply voltage:	10-40 V DC
Max control output:	200 mA
Ambient temperature:	-40 - +70°C
Enclosure rating:	IEC IP67
Cable length:	2000 mm
Setting distance:	0.8 - 1.2 mm

Note:
The 2 pcs sensors (Order No. 503550) are sold separately and are not included in the sensor kits themselves.

Sensor kit Order No.	Compact Cam	A	B	C
3018208-01	HCCU-15x24	115	81	84
3018208-02	HCCU-15x49	165	81	84
3018208-03	HCCU-40x24	168	117	107
3018208-04	HCCU-40x49	193	117	107
3018208-05	HCCU-40x99	271	117	107
3018208-15	HCCU-40x124	321	117	107
3018208-09	HCCU-60x24	171	142	135
3018208-10	HCCU-60x49	196	142	135
3018208-11	HCCU-60x99	271	142	135
3018208-06	HCCU-90x24	216	170	172
3018208-07	HCCU-90x49	241	170	172
3018208-08	HCCU-90x99	316	170	172
3018208-12	HCCU-150x24	216	182	207
3018208-13	HCCU-150x49	241	182	207
3018208-14	HCCU-150x99	316	182	207

Sensor Kit Components

Position	Quantity	Description
1	1	Fixture
2	2	Screws
3	2	Sensors (not incl.)
4	1	Triggering block
5	1 or 2	Center location pin (except -60, -90, -150)
6	2	Screws
7	1	Cover plate
8	2	Screws

View

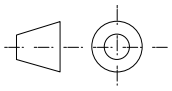

Security Block-Meets CNOMO Standard
(Renault and Peugeot/Citroen)

APPROVED PED 97/23/EC
2 million

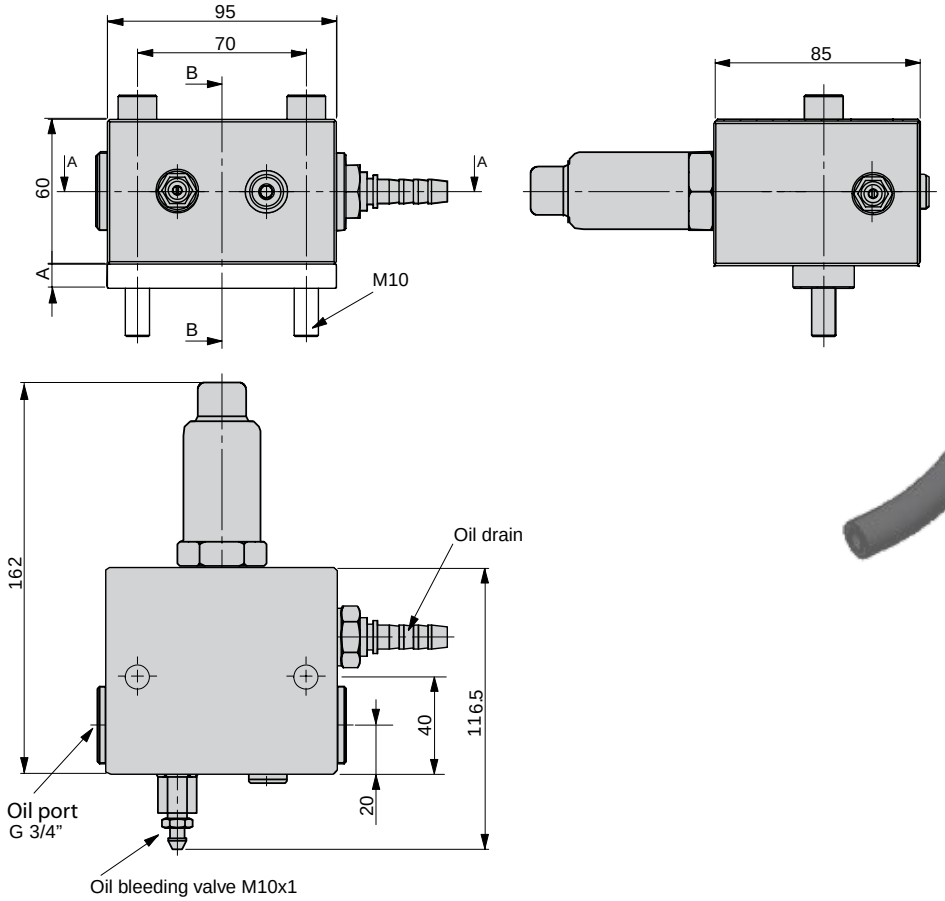

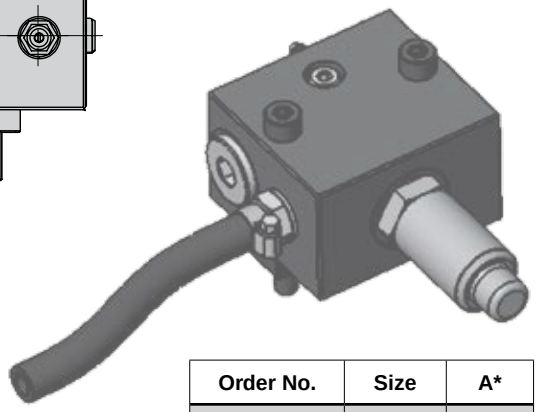

Order No.	Size	A*
3020008-15	015	10
3020008-40	040	22.5
3020008-60	060	32.5
3020008-90	090	44
3020008-150	150	70

*To be used when directly connected to the accumulator, see below.

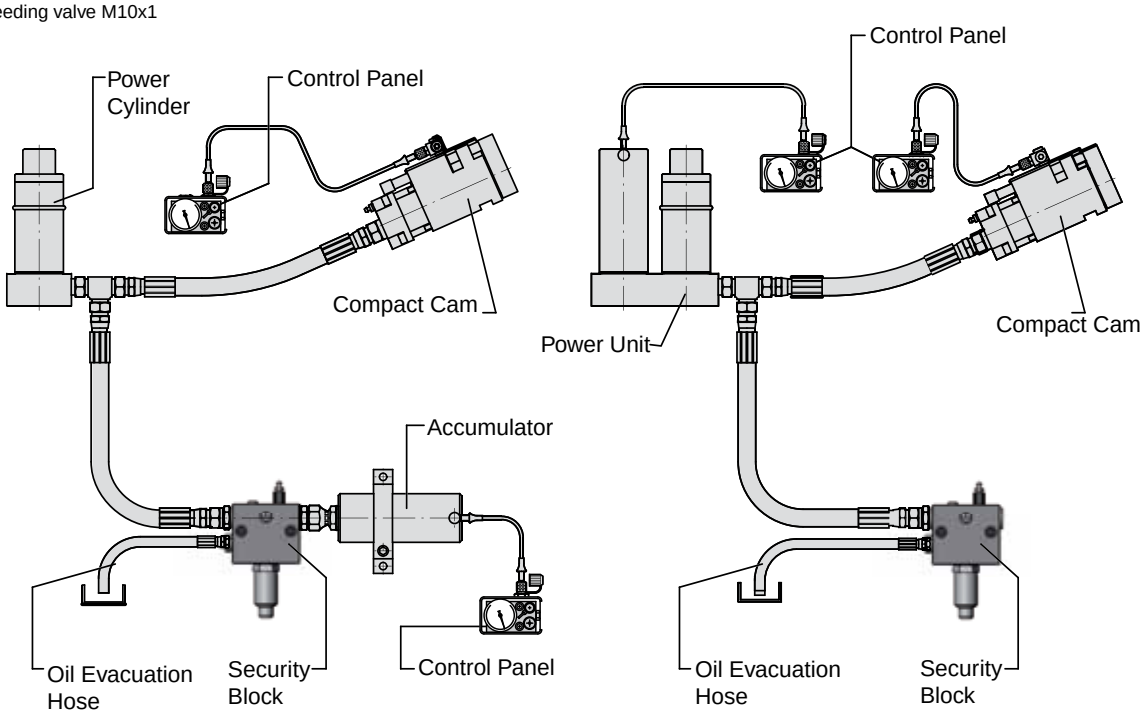

1-800-876-4976 • 440-526-5900 • FAX: 440-526-6807 • www.hysonproducts.com
© Hyson Products 2013

System hoses

EO24-Hose Dimensions
ISO standard: DIN EN ISO 8434

Hose, straight – straight
(45-90° hose ends not available, see 45-90° adapters)

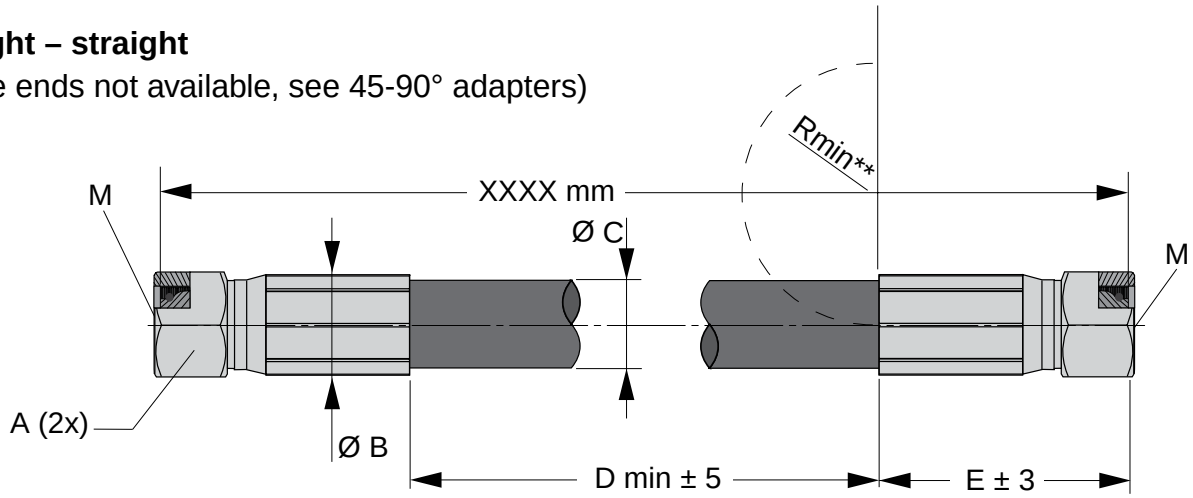

For Power Unit	Hose size	Thread M	Order No.	A	Ø B	Ø C	D min	E	Rmin*
HCPU-15 *	3/8" *	M 20x1.5	3022215-xxxx	24	24.5	20	50	56	63
HCPU-15	1/2"	M 24x1.5	3021454-xxxx	30	28.5	24	50	63	90
HCPU-40	3/4"	M30x2	3021455-xxxx	36	35	31	50	72	120
HCPU-60 and 90	1"	M36x2	3021456-xxxx	46	44	38	50	88	150
HCPU-150	1 1/4"	M42x2	3021457-xxxx	50	52	47	50	94	210

** = Smallest recommended bending radius for the hydraulic hose

* = Hose size depends on press velocity, see below:

Power Unit	Standard hose size Max velocity 0.8 m/s	0.6 m/s	0.4 m/s	0.2 m/s
HCPU-15	1/2"	3/8"	3/8"	3/8"
HCPU-40	3/4"	3/4"	1/2"	1/2"
HCPU-60	1"	3/4"	3/4"	1/2"
HCPU-90	1"	1"	3/4"	1/2"
HCPU-150	1 1/4"	1 1/4"	1"	3/4"

Additional Parker hose info:

Hose size	Inner Ø	Outer Ø	Hose	Max working pressure	Min burst pressure	Hose fitting
3/8"	10	20	721TC-6	280 bar	1120 bar	1C971-12-6
1/2"	12.5	24	721TC-8	280 bar	1120 bar	1C971-16-8
3/4"	19	31	721TC-12	280 bar	1120 bar	1C971-20-12
1"	25	38	721TC-16	280 bar	1120 bar	1C971-25-16
1 1/4""	31.8	47	721TC-20	210 bar	840 bar	1C971-30-20

© Hyson Products 2013

Hose Clamp

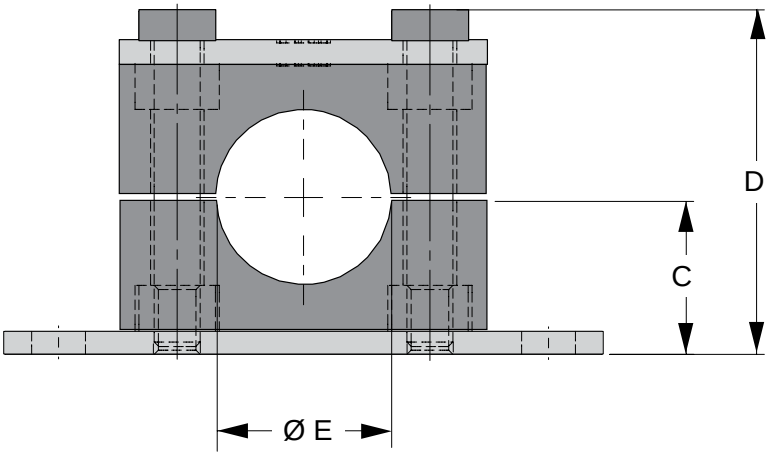

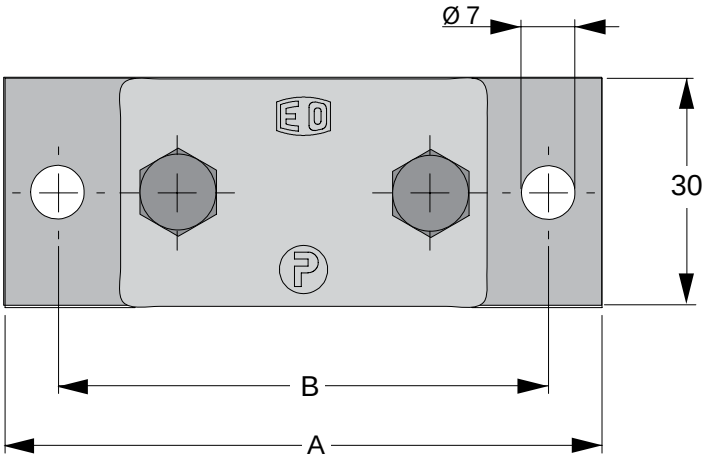

Hose size	Order No.	A	B	C	D	Ø E
3/8”	504613	78	64	20	44	20
1/2”	504614	78	64	20	44	24
3/4””	504615	87	73	24	51	31
1”	504616	100	86	32	67	38
1 1/4””	504617	116	100	36	75	47

1-800-876-4976 • 440-526-5900 • FAX: 440-526-6807 • www.hysonproducts.com
© Hyson Products 2013

Male Stud Connector

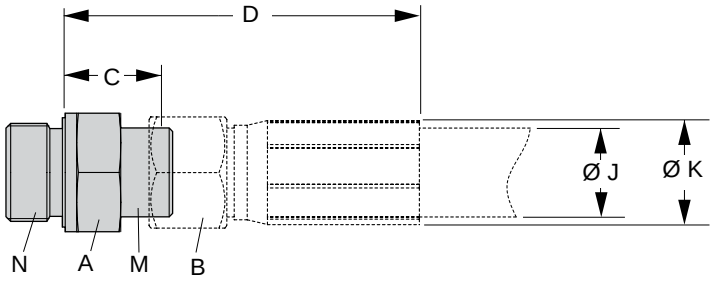

Hose size	Thread M	Thread N	Order No.	A	B	C	D	ØJ	ØK
3/8”	M 20x1.5	G 1/2”	504598	27	24	18	74	20	24.5
1/2”	M 24x1.5	G 1/2”	504321	27	30	19	82	24	30
1/2”	M24x1.5	G 3/4”	504322	32	30	21	84	24	30
3/4”	M30x2	G 1/2”	504323	32	36	21	93	31	37
3/4”	M30x2	G 3/4”	504324	32	36	21	93	31	37
3/4”	M30x2	G 1 1/4”	504325	50	36	23	95	31	37
1”	M36x2	G 1/2”	504326	41	46	23	111	38	46
1”	M36x2	G 3/4”	504327	41	46	23	111	38	46
1”	M36x2	G 1 1/4”	504328	50	46	23	111	38	46
1 1/4”	M42X2	G 3/4”	504329	41	50	24	138	46	57
1 1/4”	M42X2	G 1”	504330	46	50	24	138	46	57
1 1/4”	M42X2	G 1 1/4”	504331	50	50	27	141	46	57

Swivel Connector

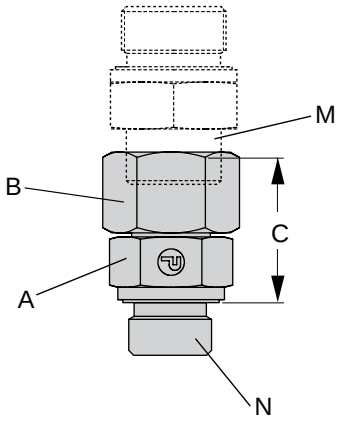

Thread M	Thread N	Order No.	A	B	C
M 20x1.5	G 1/2”	504608	27	24	35
M 24x1.5	G 1/2”	504609	27	30	37
M 30x2	G 3/4”	504610	32	36	43
M 36x2	G 1”	504611	41	46	48
M 42x2	G 1 1/4”	504612	50	50	51

© Hyson Products 2013

Swivel Nut Elbow and Male Stud Connector

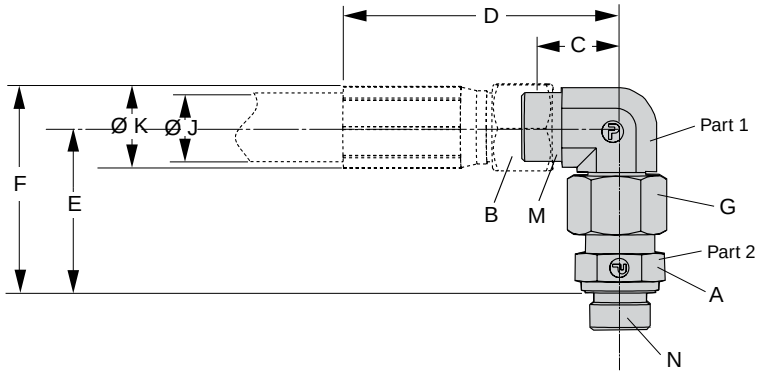

Hose size	Thread M	Thread N	Order No. Part 1	Order No. Part 2	A	B	C	D	E	F	G	ØJ	ØK
3/8”	M20x1.5	G 1/2”	504599	504598	27	24	22	78	49	61	24	20	24,5
1/2”	M24x1.5	G 1/2”	504332	504321	27	30	25	88	55	70	30	24	30
1/2”	M24x1.5	G 3/4”	504332	504322	32	30	25	88	58	73	30	24	30
3/4”	M30x2	G 1/2”	504333	504323	32	36	27	99	65	84	36	31	37
3/4”	M30x2	G 3/4”	504333	504324	32	36	27	99	65	84	36	31	37
3/4”	M30x2	G 1 1/4”	504333	504325	50	36	27	99	67	86	36	31	37
1”	M36x2	G 1/2”	504334	504326	41	46	30	118	73	96	46	38	46
1”	M36x2	G 3/4”	504334	504327	41	46	30	118	73	96	46	38	46
1”	M36x2	G 1 ¼”	504334	504328	50	46	30	118	73	96	46	38	46
1 1/4”	M42x2	G 3/4”	504335	504329	41	50	36	150	79	108	50	46	57
1 1/4”	M42x2	G 1 1/4”	504335	504331	50	50	36	150	79	108	50	46	57

Adjustable Locknut Elbow

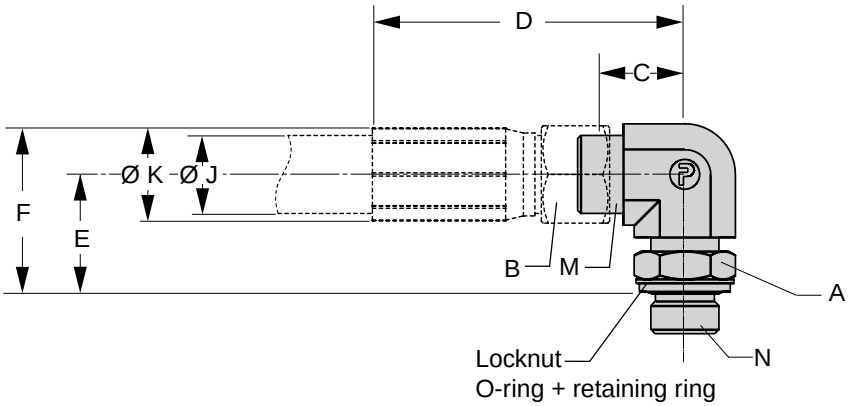

Hose size	Thread M	Thread N	Order No.	A	B	C	D	E	F	ØJ	ØK
3/8”	M20x1.5	G 1/2”	504600	27	24	22	78	36	48	20	24.5
1/2”	M24x1.5	G 1/2”	504336	27	30	25	88	36	51	24	30
3/4”	M30x2	G 3/4”	504337	36	36	28	100	39	58	31	37
1”	M36x2	G 3/4”	504338	41	46	30	118	44	67	38	46
1 1/4”	M42x2	G1 1/4”	--	--	--	--	--	--	--	--	--

1-800-876-4976 • 440-526-5900 • FAX: 440-526-6807 • www.hysonproducts.com
© Hyson Products 2013

Swivel Nut 45°Elbow and Male Stud Connector

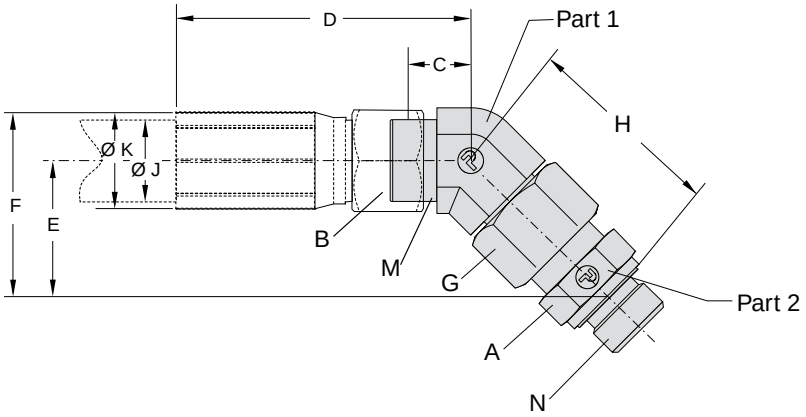

Hose size	Thread M	Thread N	Order No. Part 1	Order No. Part 2	A	B	C	D	E	F	G	H	ØJ	ØK
3/8”	M20x1.5	G 1/2”	504601	504598	27	24	17	73	35	47	24	49	20	24.5
1/2”	M24x1.5	G 1/2”	504339	504321	27	30	16	79	39	54	30	55	24	30
1/2”	M24x1.5	G 3/4”	504339	504322	32	30	16	79	40	55	30	57	24	30
3/4”	M30x2	G 1/2”	504340	504323	32	36	16	88	46	65	36	65	31	37
3/4”	M30x2	G 3/4”	504340	504324	32	36	16	88	46	65	36	65	31	37
3/4”	M30x2	G 1 1/4”	504340	504325	50	36	16	88	47	66	36	67	31	37
1”	M36x2	G 1/2”	504341	504326	41	46	19	107	52	75	46	73	38	46
1”	M36x2	G 3/4”	504341	504327	41	46	19	107	52	75	46	73	38	46
1”	M36x2	G 1 1/4”	504341	504328	50	46	19	107	52	75	46	73	38	46
1 1/4”	M42x2	G 3/4”	504342	504329	41	50	24	138	56	85	50	79	46	57
1 1/4”	M42x2	G 1 1/4”	504342	504331	50	50	24	138	56	85	50	79	46	57

Swivel Nut Branch Tee and Male Stud Connector

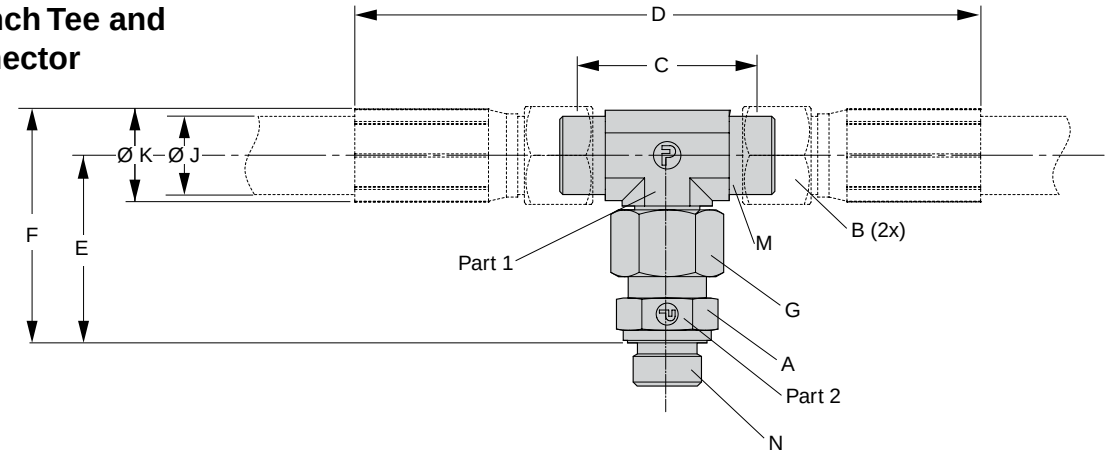

Hose size	Thread M	Thread N	Order No. Part 1	Order No. Part 2	A	B	C	D	E	F	G	ØJ	ØK
3/8”	M20x1.5	G 1/2”	504602	504598	27	24	43	155	49	61	24	20	24.5
1/2”	M24x1.5	G 1/2”	504343	504321	27	30	49	175	55	70	30	24	30
1/2”	M24x1.5	G 3/4”	504343	504322	32	30	49	175	58	73	30	24	30
3/4”	M30x2	G 1/2”	504344	504323	32	36	53	197	65	84	36	31	37
3/4”	M30x2	G 3/4”	504344	504324	32	36	53	197	65	84	36	31	37
3/4”	M30x2	G 1 1/4”	504344	504325	50	36	53	197	67	86	36	31	37
1”	M36x2	G 1/2”	504345	504326	41	46	60	236	73	96	46	38	46
1”	M36x2	G 3/4”	504345	504327	41	46	60	236	73	96	46	38	46
1”	M36x2	G 1 1/4”	504345	504328	50	46	60	236	73	96	46	38	46
1 1/4”	M42X2	G 3/4”	504346	504329	41	50	71	299	79	108	50	46	57
1 1/4”	M42X2	G 1 1/4”	504346	504331	50	50	71	299	79	108	50	46	57

© Hyson Products 2013

Swivel Nut Run Tee and Male Stud Connector

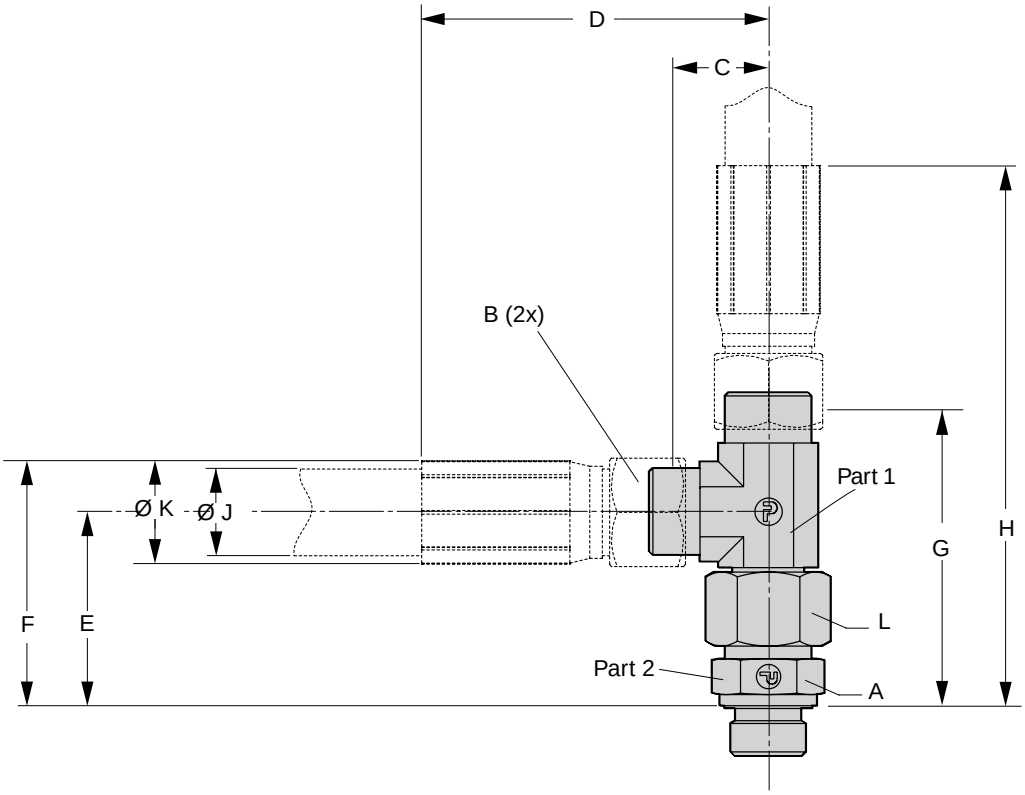

Hose size	Thread M	Thread N	Order No. Part 1	Order No. Part 2	A	B	C	D	E	F	G	H	Ø J	Ø K
3/8”	M20x1.5	G 1/2”	504603	504598	27	24	22	78	49	61	71	127		
1/2”	M24x1.5	G 1/2”	504347	504321	27	30	25	88	55	70	80	143	24	30
1/2”	M24x1.5	G 3/4”	504347	504322	32	30	25	88	58	73	82	145	24	30
3/4”	M30x2	G 1/2”	504348	504323	32	36	27	99	65	84	92	164	31	37
3/4”	M30x2	G 3/4”	504348	504324	32	36	27	99	65	84	92	164	31	37
3/4”	M30x2	G 1 1/4”	504348	504325	50	36	27	99	67	86	94	166	31	37
1”	M36x2	G 1/2”	504349	504326	41	46	30	118	73	96	103	191	38	46
1”	M36x2	G 3/4”	504349	504327	41	46	30	118	73	96	103	191	38	46
1”	M36x2	G 1 1/4”	504349	504328	50	46	30	118	73	96	103	191	38	46
1 1/4”	M42X2	G 3/4”	504350	504329	41	50	36	150	79	108	114	228	46	57
1 1/4”	M42X2	G 1 1/4”	504350	504331	50	50	36	150	79	108	114	228	46	57

1-800-876-4976 • 440-526-5900 • FAX: 440-526-6807 • www.hysonproducts.com
© Hyson Products 2013

Union Straight

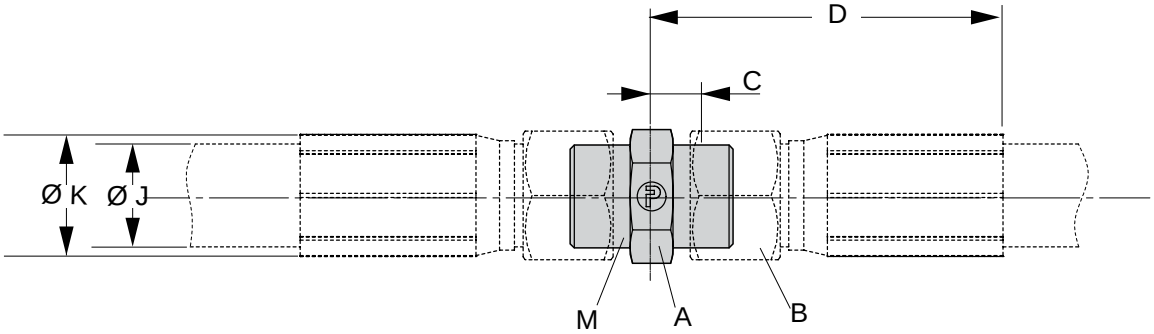

Hose size	Thread M	Order No.	A	B	C	D	Ø J	Ø K
3/8”	M20x1.5	504604	22	24	10	66	20	24.5
1/2”	M24x1.5	504351	27	30	11	74	24	30
3/4”	M30x2	504352	32	36	12	84	31	37
1”	M36x2	504353	41	46	13	101	38	46
1 1/4”	M42X2	504354	46	50	14	128	46	57

Union Elbow

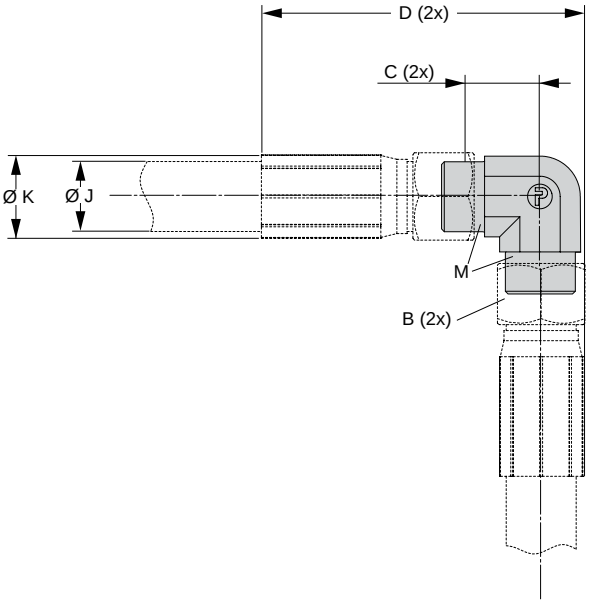

Hose size	Thread M	Order No.	B	C	D	Ø J	Ø K
3/8”	M20x1.5	504605	24	22	90	20	24.5
1/2”	M24x1.5	504355	30	25	102	24	30
3/4”	M30x2	504356	36	27	117	31	37
1”	M36x2	504357	46	30	140	38	46
1 1/4”	M42X2	504358	50	36	178	46	57

© Hyson Products 2013

Union Tee

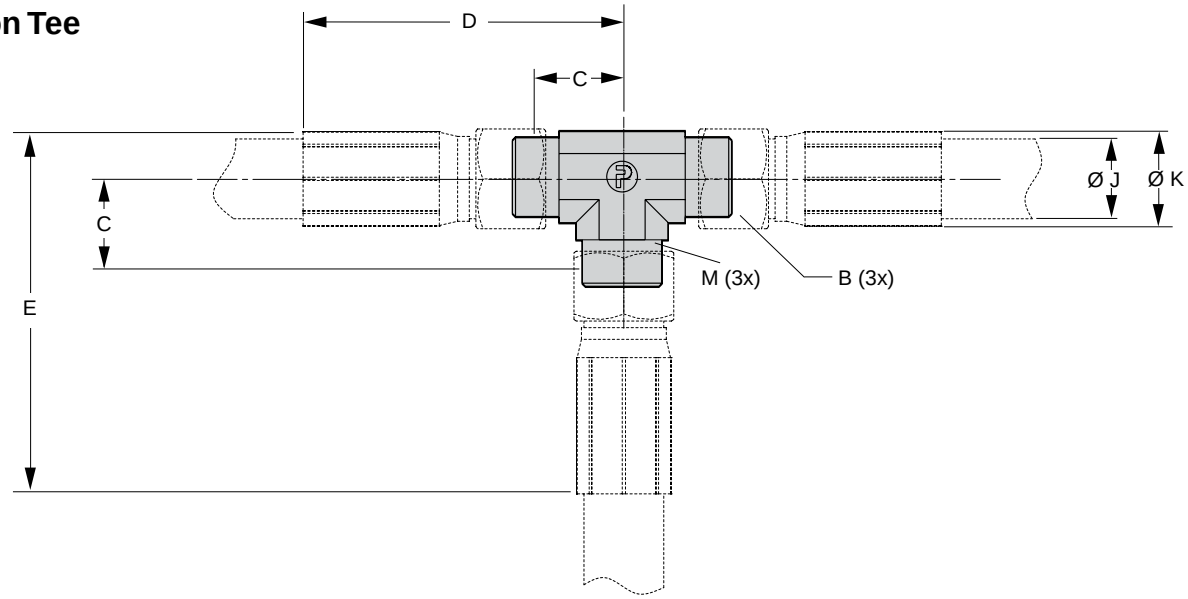

Hose size	Thread M	Order No.	B	C	D	E	Ø J	Ø K
3/8”	M20x1.5	504606	24	22	78	91	20	24.5
1/2”	M24x1.5	504359	30	25	88	103	24	30
3/4”	M30x2	504360	36	27	99	117	31	37
1”	M36x2	504361	46	30	118	140	38	46
1 1/4”	M42X2	504362	50	36	150	178	46	57

Union Cross

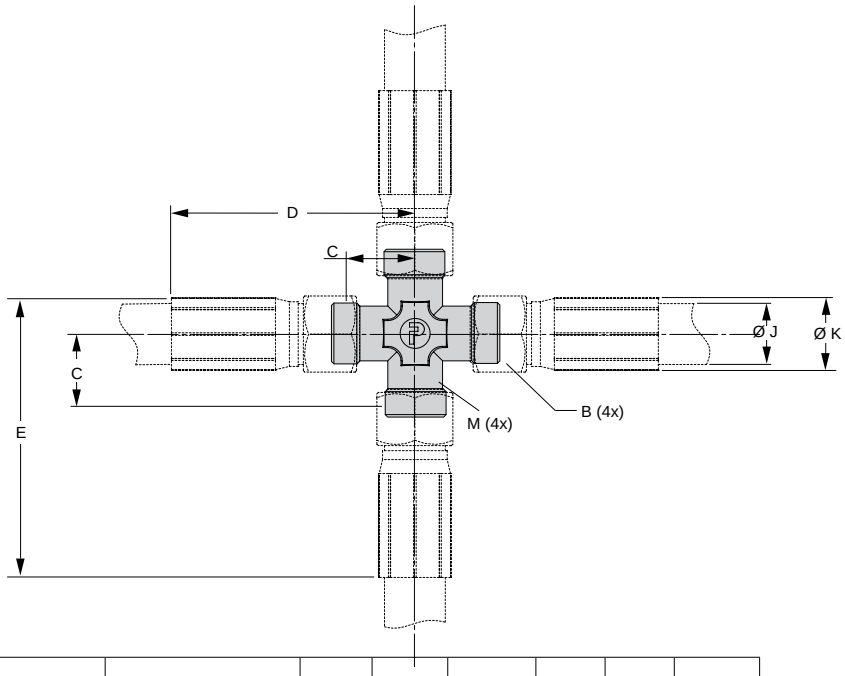

Hose size	Thread M	Order No.	B	C	D	E	Ø J	Ø K
3/8”	M20x1.5	504607	24	22	78	91	20	24.5
1/2”	M24x1.5	504363	30	25	88	103	24	30
3/4”	M30x2	504364	36	27	99	117	31	37
1”	M36x2	504365	46	30	118	140	38	46
1 1/4”	M42x2	504366	50	36	150	178	46	57

1-800-876-4976 • 440-526-5900 • FAX: 440-526-6807 • www.hysonproducts.com
© Hyson Products 2013

Distribution Block 3022834

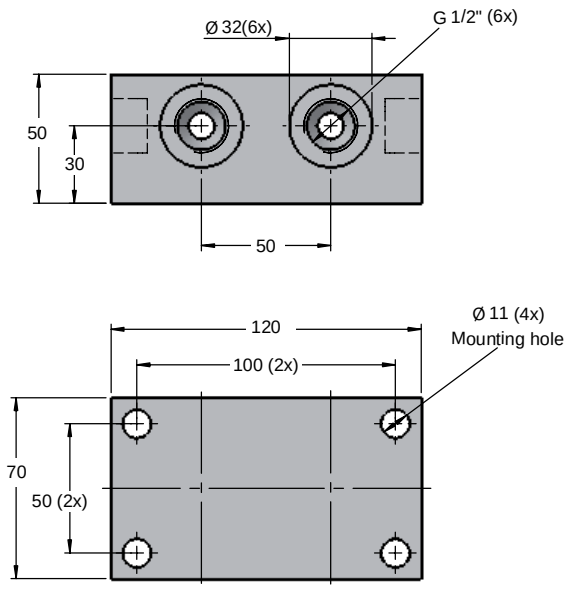

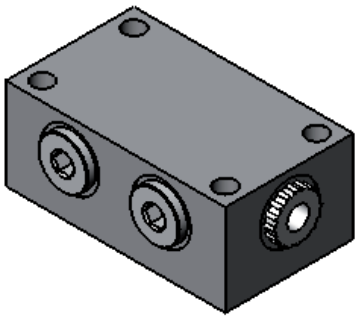

Distribution Block 3022835

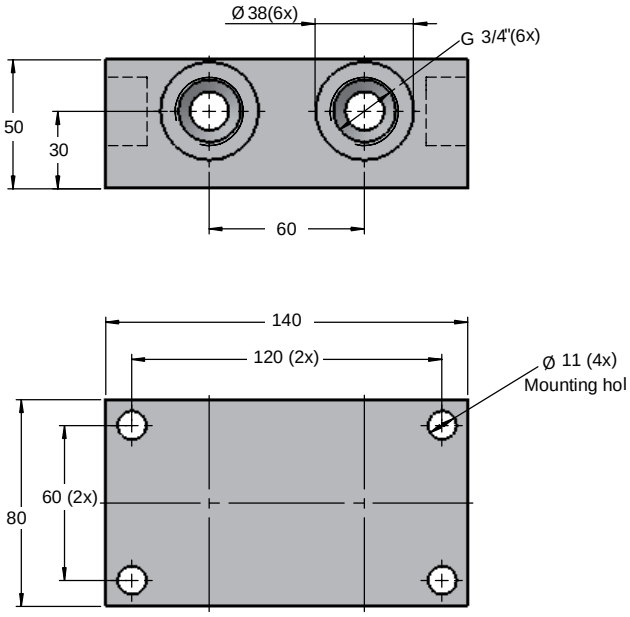

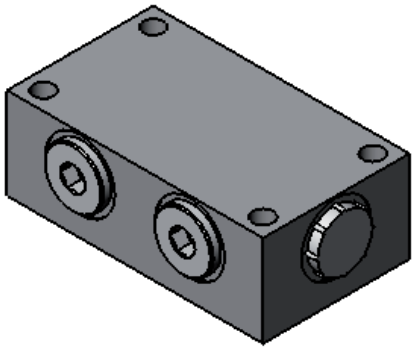

System adapters

Quick disconnect

The quick disconnect can be used to separate the power unit and the cam unit/force cylinder without refilling and bleeding the system.

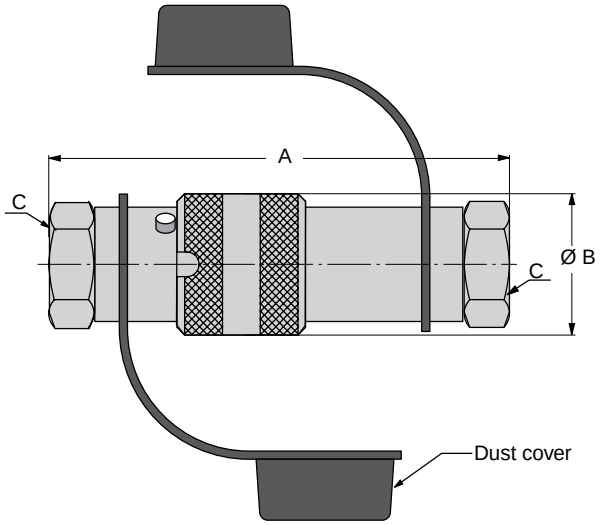

Ordering No.	A	ØB	C	Max oil flow	Power Unit / Cam	Max velocity Power Unit / Cam
3018084-01	132	40	G 1/2”	100 l/min	15	0.8
3018084-02	162	50	G 3/4”	300 l/min	40, 60, 90	0.8 (90=0.6)
3018084-03	176	57	G 1	500 l/min	150	0.6

Installation possibilites

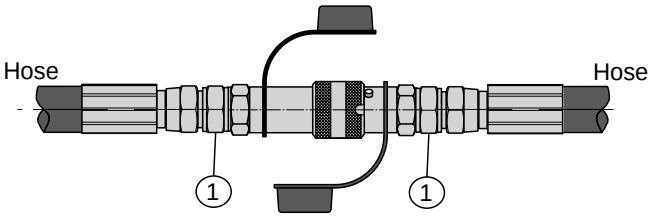

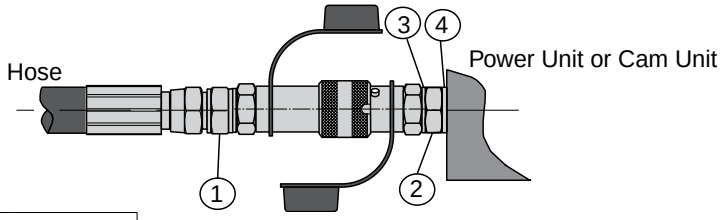

Ordering number adapter and washers				
Quick coupling	Position 1	Position 2	Position 3	Position 4
3018084-01	504321	503551	501271	501271
3018084-02	504324 or 504327*	503552	501270	501270
3018084-03	504330	503553	500282	503554

*for 1" hose size

1-800-876-4976 • 440-526-5900 • FAX: 440-526-6807 • www.hysonproducts.com
© Hyson Products 2013

Designing your hosed system

How to design your hosed system

1. Choose the right hose size and style from page 25 (the hose size is always dictated by the Power Unit size).

2. Choose the right size/style adapter between hose and power unit using page 29-32. The oil connection is found on the respective power unit dimension page.

3. Choose the right size/style adapter between hose and cam unit/force cylinder (HCCU or HCF) using page 29-32. The oil connection is found on the respective cam unit/force cylinder dimension page. You can also connect one hose to an other using adapters (see page 33-34).

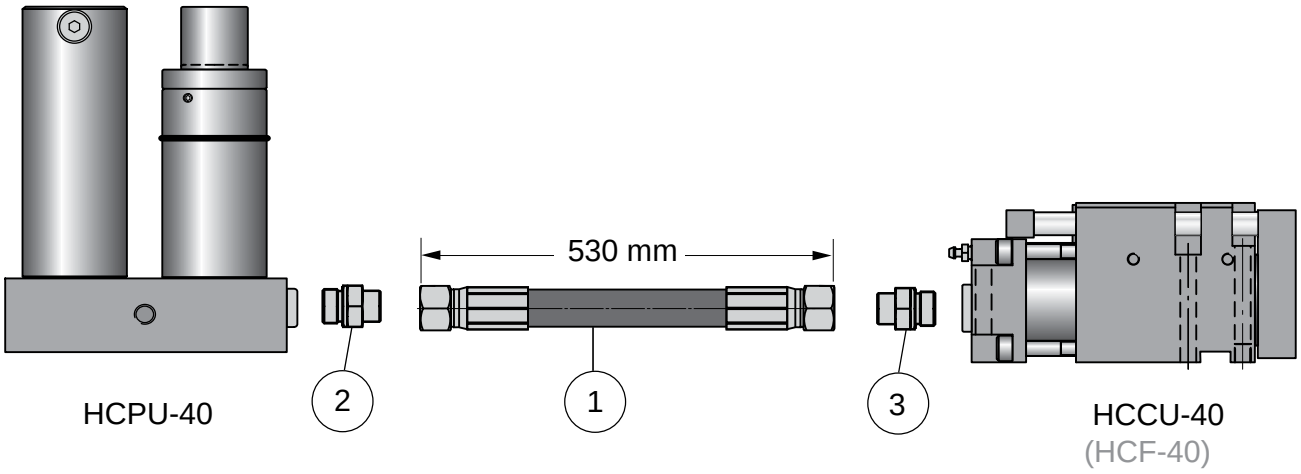

Example above shows how to connect a HCPU-40 to a HCCU-40 (the same principle applies when connecting an HCF).

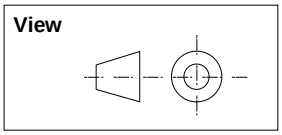

Position	Order No.
1	3021455-0530
2	504324
3	504324

Designing your hosed system

Example below shows how to connect a HCPU-150 unit for two cam units HCCU-90 (the same principle applies when connecting an HCF).

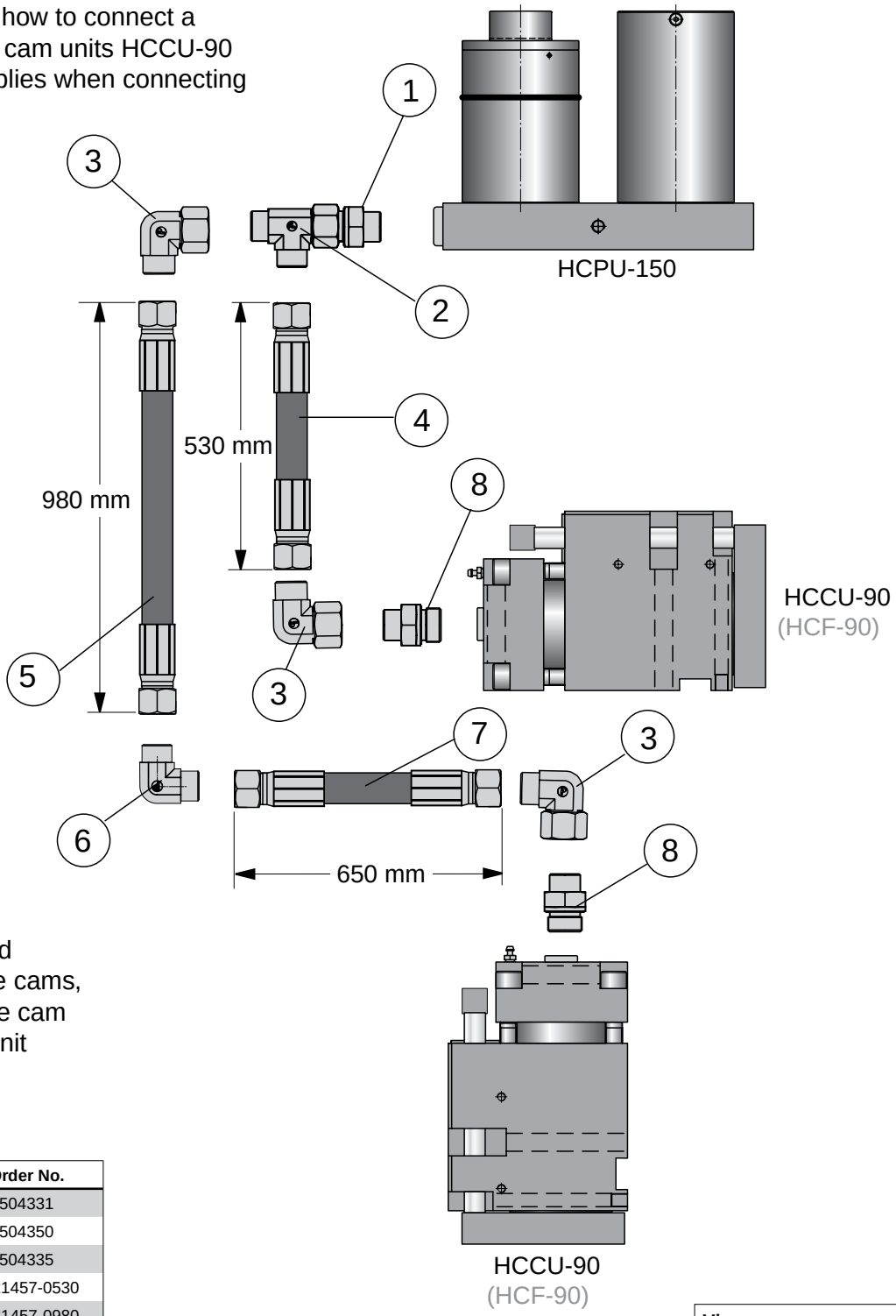

Remember:
For synchronized movement of the cams, connect only one cam unit per power unit

Detail	Quantity	Order No.
1	1	504331
2	1	504350
3	3	504335
4	1	3021457-0530
5	1	3021457-0980
6	1	504358
7	1	3021457-0652
8	2	504329

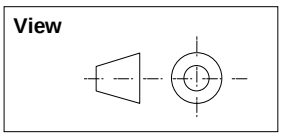

1-800-876-4976 • 440-526-5900 • FAX: 440-526-6807 • www.hysonproducts.com
© Hyson Products 2013

Hosed systems for Control Panels and oil bleeding

HCCH compact cam/HCPU power unit (example)

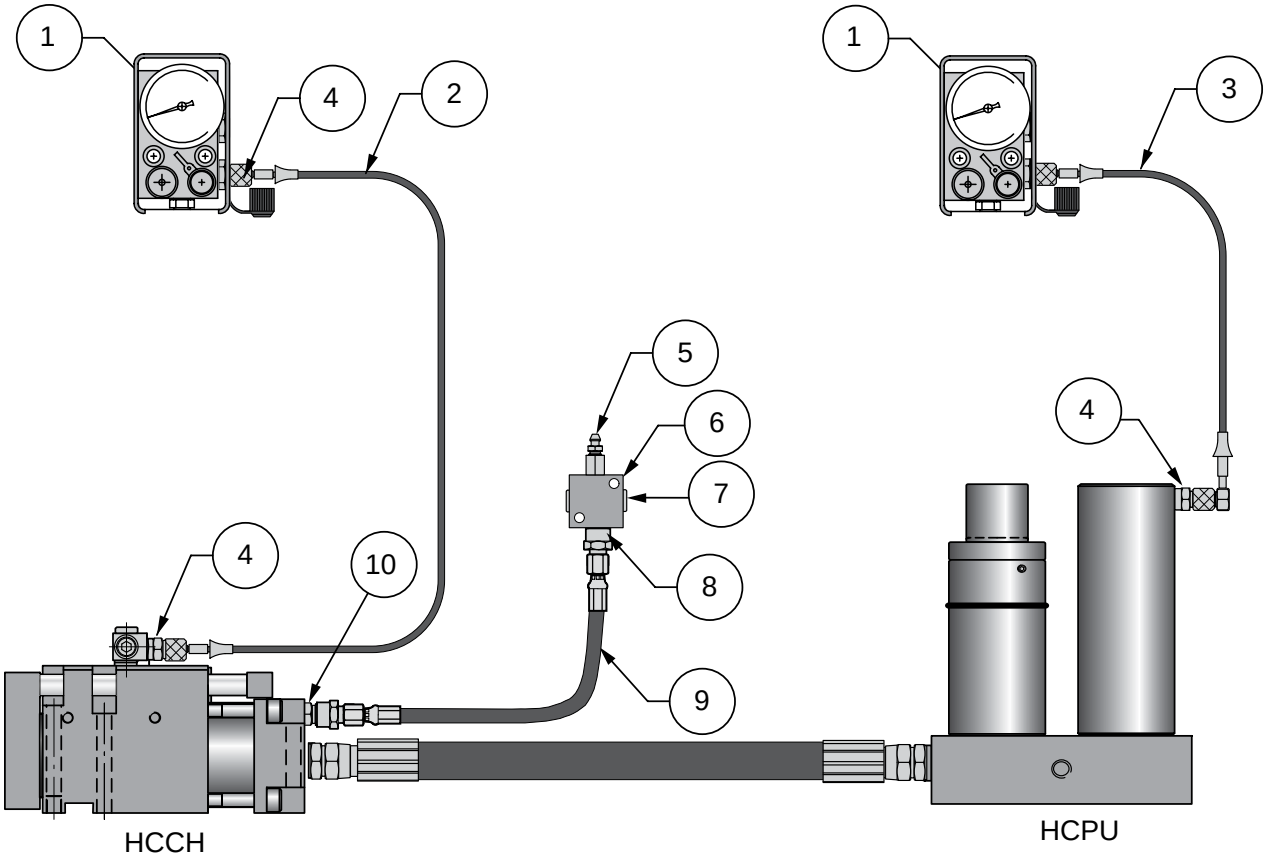

Hosed system for control Panels			
Detail	**Quantity**	**Description**	**Order No.**
1	2	Control panel	CP-N2 LG
2	1	EZ-hose	4014974-xxxx
3	1	EZ-hose	4017568-xxxx
4	4	Adapter	4114973-G 1/8”

Hose system for oil bleeding			
Detail	**Quantity**	**Description**	**Order No.**
5	1	Bleed nipple	4014007
6	1	Distribution block	4017032
7	1	Plug G 1/8”	500343
8	1	Adapter	503593
9	1	EO24-hose	3020857-xxxx
10	1	Adapter M10x1	504636

Hosed systems for Control Panels and oil bleeding

Two HCCH compact cams/HCPU power unit (example)

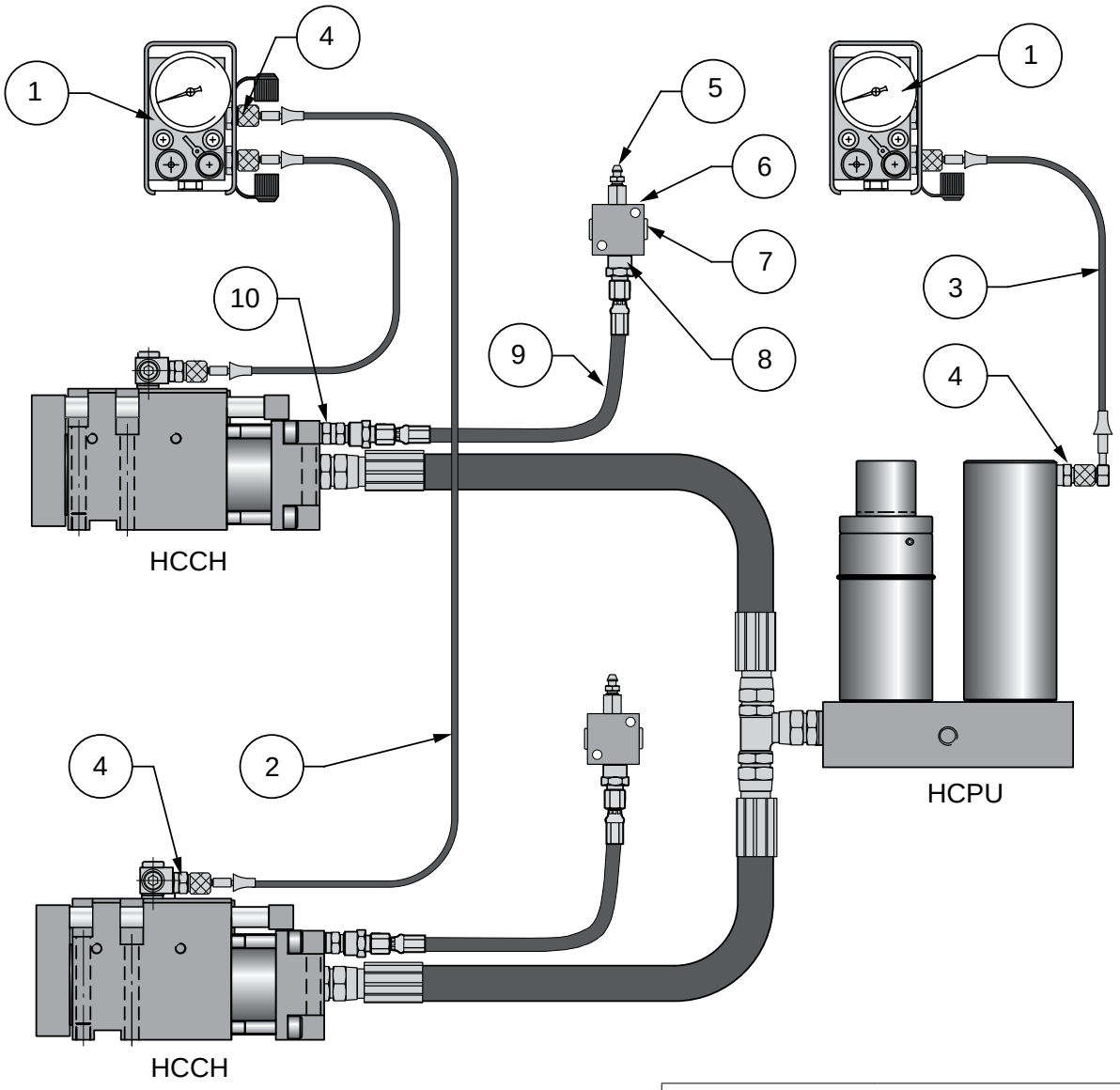

Hosed system for control panels			
Detail	**Quantity**	**Description**	**Order No.**
1	2	Control panel	CP-N2 LG
2	2	EZ-hose	4014974-xxxx
3	1	EZ-hose	4017568-xxxx
4	6	Adapter	4114973-G 1/8”

Hosed system for oil bleeding			
Detail	**Quantity**	**Description**	**Order No.**
5	2	Bleed nipple	4014007
6	2	Distribution block	4017032
7	2	Plug G 1/8”	500343
8	2	Adapter	503593
9	2	EO24-hose	3020857-xxxx
10	2	Adapter M10x1	504636

1-800-876-4976 • 440-526-5900 • FAX: 440-526-6807 • www.hysonproducts.com
© Hyson Products 2013

Hosed systems for Control Panels and oil bleeding

Two HCF force cylinders to two HCPU power units (example)

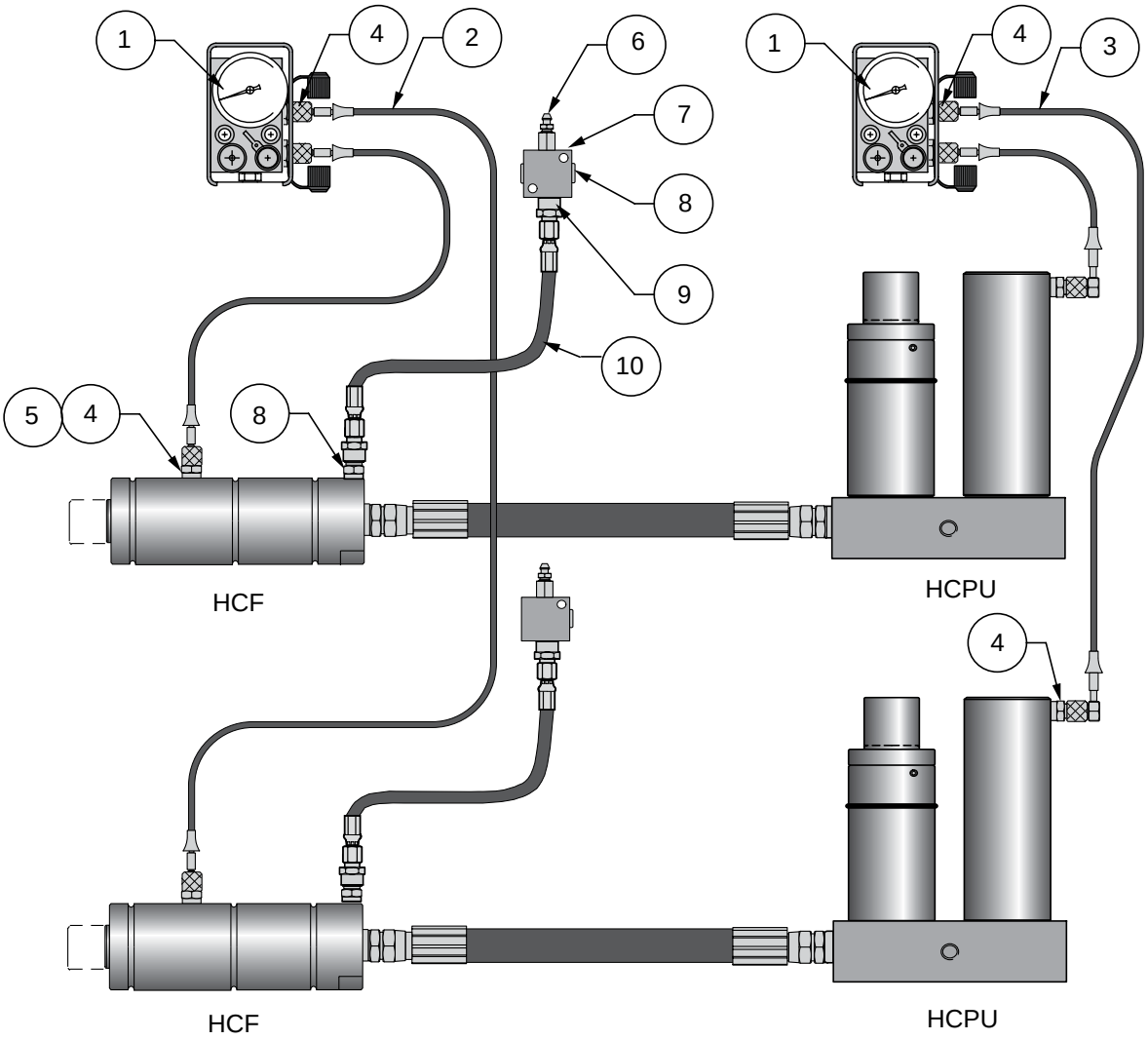

Hosed system for Control Panels			
Detail	**Quantity**	**Desqription**	**Order No.**
1	2	Control Panel	CP-N2 LG
2	2	EZ-hose	4014974-xxxx
3	2	EZ-hose	4017568-xxxx
4	8	Adapter	4114973-G 1/8”
5	1*	Washer	500472

*only needed for HCF-15

Hosed system for oil bleeding			
Detail	**Quantity**	**Description**	**Order No.**
6	2	Bleed nipple	4014007
7	2	Distribution block	4017032
8	2	Plug G 1/8”	500343
9	4	Adapter	503593
10	2	EO24-hose	3020857-xxxx

Hosed systems for Control Panels and oil bleeding

Three HCF force cylinders to one HCPU power unit (example)

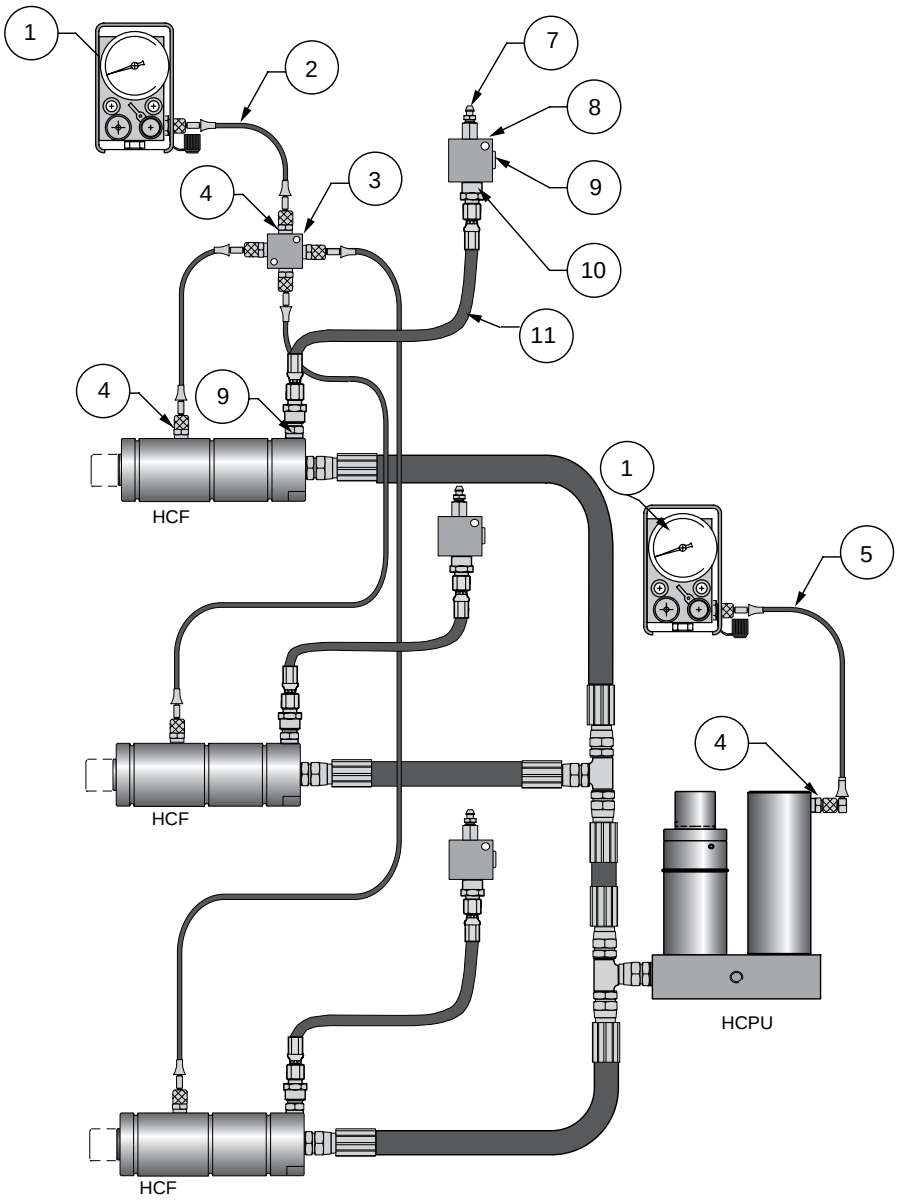

Hosed system for Control Panels			
Detail	**Quantity**	**Description**	**Order No.**
1	2	Controll Panel	CP-N2 LG
2	4	EZ-hose	4014974-xxxx
3	1	Distribution block	4017032
4	10	Adapter	4114973-G 1/8”
5	1	EZ-hose	4017568-xxxx
6	1*	Washer	500472

Hosed system for oil bleeding			
Detail	**Quantity**	**Description**	**Order No.**
7	3	Bleed nipple	4014007
8	3	Distribution block	4017032
9	3	Plug G 1/8”	500343
10	6	Adapter	503593
11	3	EO24-hose	3020857-xxxx

*only needed for HCF-15

1-800-876-4976 • 440-526-5900 • FAX: 440-526-6807 • www.hysonproducts.com
© Hyson Products 2013

Pump Unit
Order No. HPU-1200-HP

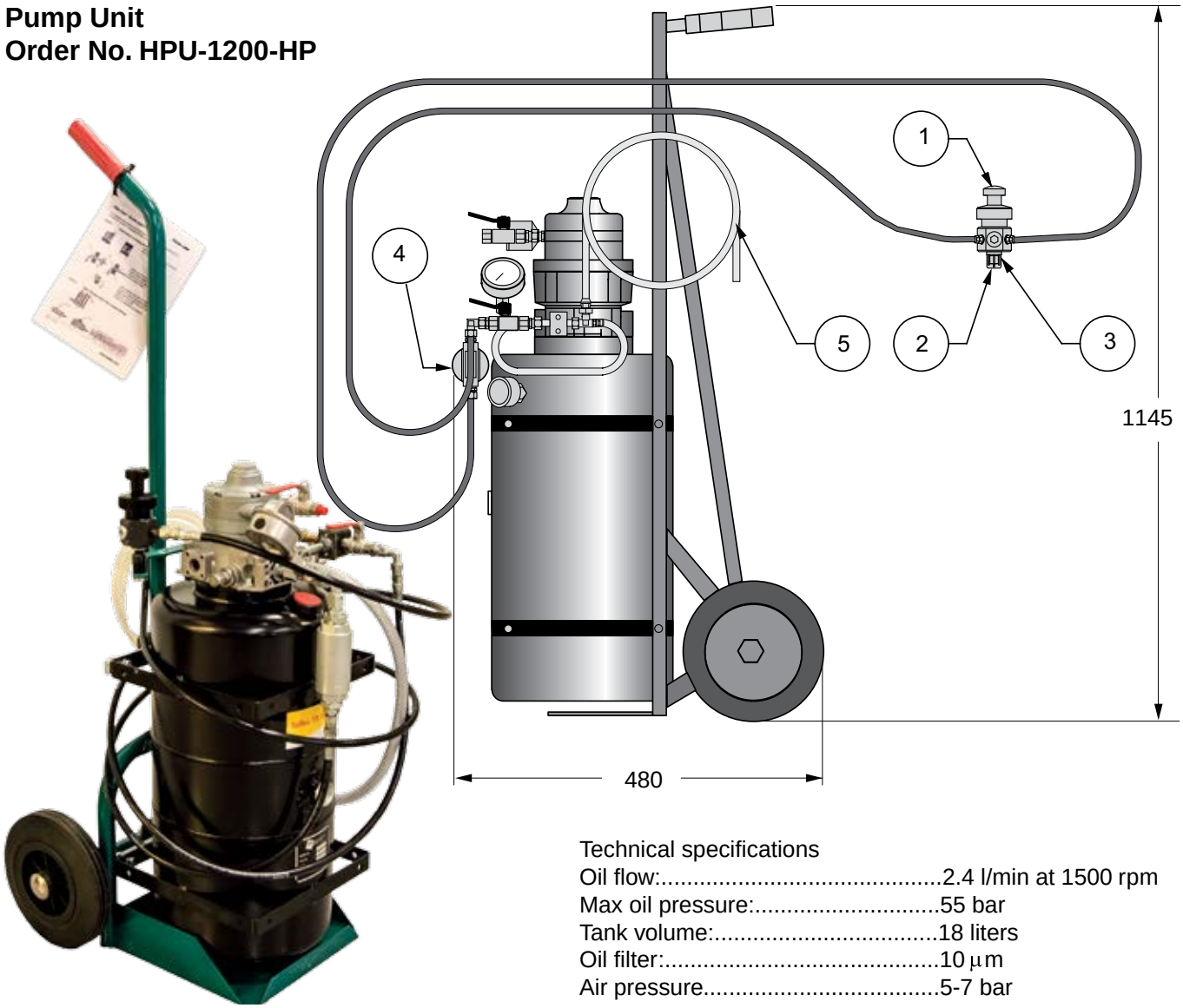

Technical specifications
Oil flow:.....2.4 l/min at 1500 rpm
Max oil pressure:.....55 bar
Tank volume:.....18 liters
Oil filter:.....10 µm
Air pressure.....5-7 bar

The hook spanner below is used to hold the piston in place when loosening/tightening the port plug.

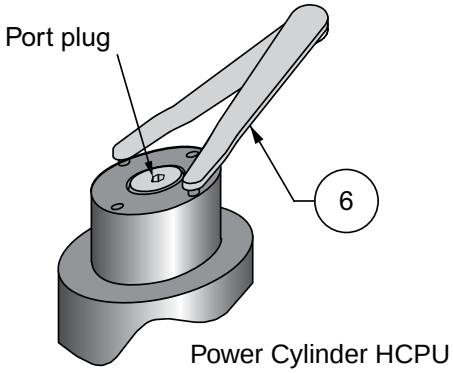

Spare parts		
Position	**Description**	**Order No.**
1	Armature (include position 2 and 3)	3013941
2	Plastic plug	502446
3	Rubber-steel washer	502160
4	Filter	505763
5	Transparent hose	503116
6	Hook spanner (HCPU-15)	503417
6	Hook spanner (HCPU-40-150)	503418

EHC Electrical Pump Unit Order No. 503708

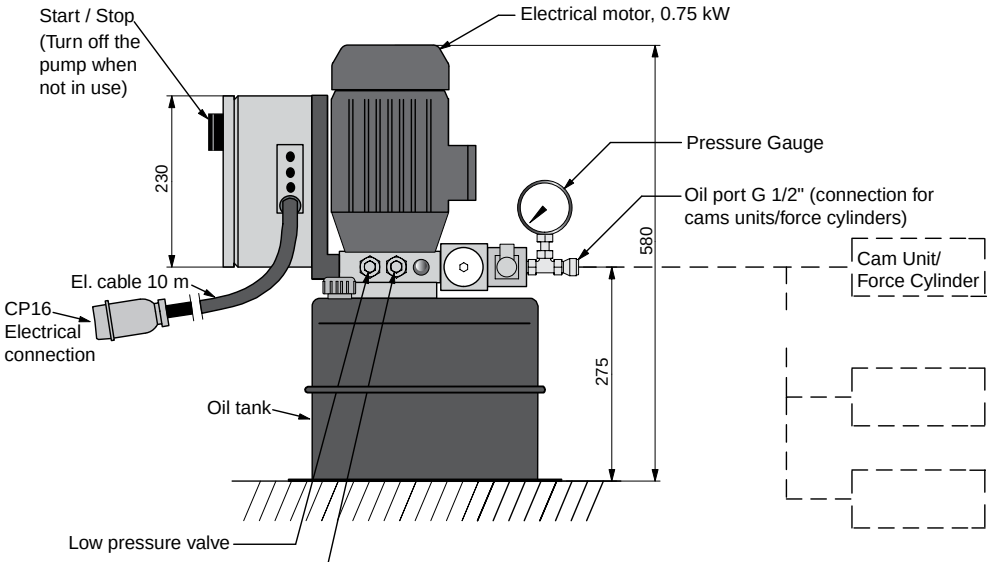

Note:
Both the low and high pressure valves have adjustable pressure settings.
We recommend the low pressure valve is set to 25 bar.
The high pressure valve is adjustable up to a maximum of 180 bar depending on the requirement of the operation being performed.

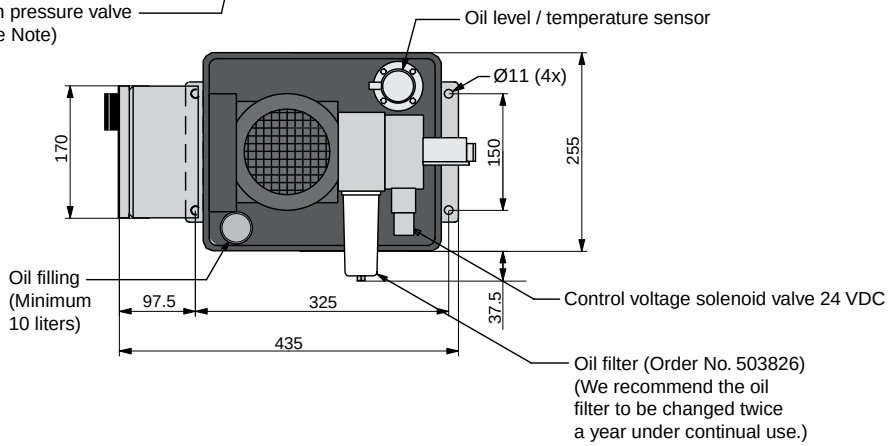

Technical data - hydraulic system	
Oil tank volume	15 l
Hydraulic oil ISO VG 32	DIN 51524 HVLP (or equivalent)
Min oil flow at 180 bar	1.6 l/min
Max oil flow at 25 bar	8.7 l/min
Oil pressure during cam travel	10-20 bar
Oil pressure during cam operation	Max 180 bar
Low and high pressure valves	(See Note)

Technical data - electrical system	
Main voltage electrical pump	3x220-440 VAC 50-60Hz
Control voltage solenoid valve	24 VDC
Overtemp sensor max oil temp.	70+-5°C
Overtemp sensor restart temp.	50°C

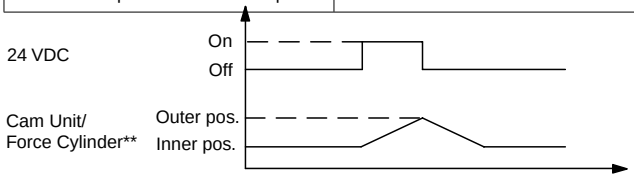

	Cam Unit/Force Cylinder velocity*	
	Forward + return	During operation
Cam Unit/Force Cylinder size	(Low pressure)	(High pressure)
15	115 mm/s	21 mm/s
40	47 mm/s	9 mm/s
60	29 mm/s	5 mm/s
90	18 mm/s	3 mm/s
150	12 mm/s	2 mm/s

*The table shows approximate values based on a single cam unit/ force cylinder connected to a single EHC electrical pump unit. When using more cam units/force cylinders connected to one EHC unit, divide the velocity by the number of cam units/force cylinders.
Ex: 115/3 cam units/force cylinders = 38 mm/s

**Cam units/force cylinders forward:
Activated by the control signal (24 VDC)

**Cam units/force cylinders return:
Activated by the built-in gas return in the cam unit/force cylinder

1-800-876-4976 • 440-526-5900 • FAX: 440-526-6807 • www.hysonproducts.com
© Hyson Products 2013

Installation and Service

Safety guidelines

Symbol to observe

This symbol means that special attention is required.

Personnel

All personnel who operate or maintain this equipment must fully understand how it works. Always wash your hands after working with hydraulic systems.

Workplace

The workplace must be kept absolutely clean during the installation and maintenance of Nitro-Cam.

Equipment

Use only clean and functional tools and proper safety equipment for eyes and skin.

Adapters for hoses

All connections on the units are plugged upon delivery. To reduce the risk of contamination from foreign bodies, remove the plugs only when absolutely necessary.

Nitrogen products

Be very careful when working with nitrogen products. See special instructions for gas springs, as mishandling can lead to personal injury. Make sure there is enough room for the accumulator in the tool.

Hoses

The hoses are washed and plugged to protect them from dirt and other contaminants that can damage the system. Make sure that the hoses are protected from sharp edges and external damage. The hoses will move a little, depending on the oil pressure pulsation during operation.

Torque settings for screws

Always use a torque wrench when tightening screws. See Table 1 for 12.9 grade screws.

Screw dim	Allen key	Torque (Nm)
M 6	5	15
M 8	6	40
M 10	8	75
M 12	10	135
M 16	14	330
M 20	17	640

Table 1

Installation

The following information describes only the most important recommendations. If there are any questions about the installation, do not hesitate to contact Hyson Products or your local distributor.

Tel. 440-526-5900

Fax 440-526-6807

Website www.hysonproducts.com

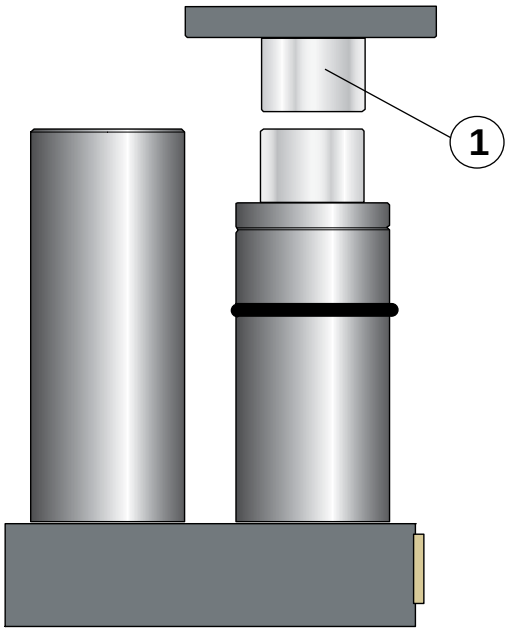

Power Unit

The power unit can be mounted in any position in the tool, including upside-down (valid for all units). A driver (1) is often used and adapted to give the right stroke length of the power cylinder.

Make sure the surface which makes contact with the piston on the top of the power cylinder is parallel and even. Make sure there is enough room for the accumulator in the tool.

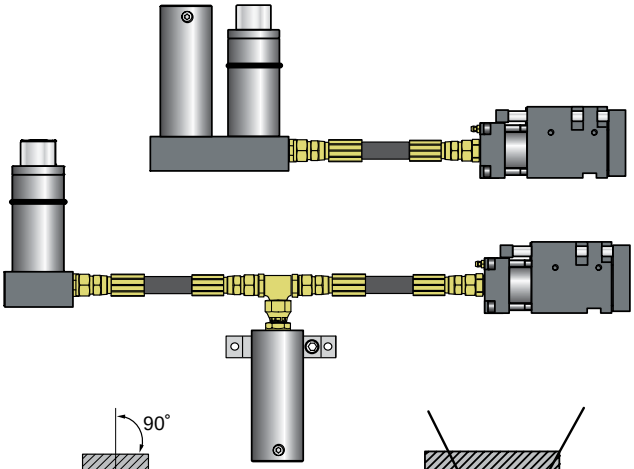

Power Unit Mounting Instructions (HCPU, HCPU-S)

Mount the power unit to a flat surface with solid structure using four screws, either upright or upside-down. To ensure the cam unit/force cylinder always travels the same stroke length, it is customary to stroke the power unit an extra 10 mm, which also causes the accumulator´s piston to rise10 mm.

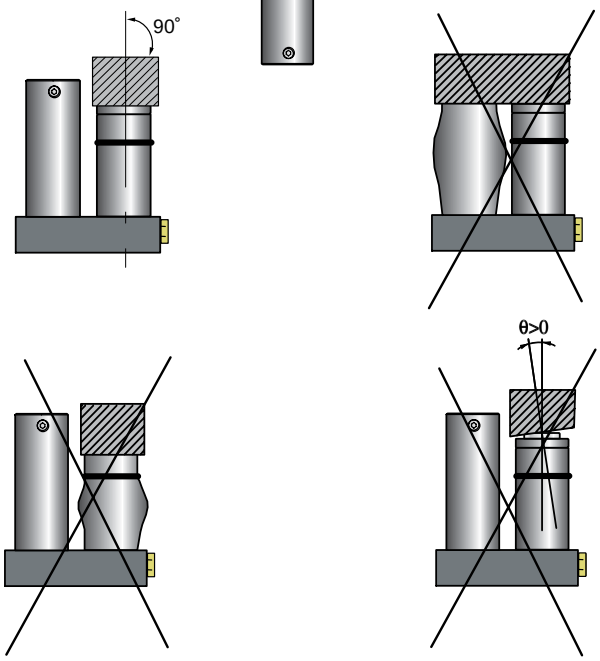

© Hyson Products 2013

Compact Cam

Use dowel pins and a key to locate the position of the cam unit in the tool.

The punch plate (1) can be removed for machining by first removing all three screws (2) from the plate.

The reaction force, created as a result of the forming/piercing operation being performed by the cam unit, can be located within any part of the shaded area (3).

However, it is recommended to position this force directly in the center of the shaded area (3). For more information, see the respective cam unit dimensions page.

Please note, it is not recommended to put any torque on the punch plate (1).

When mounting a punch directly onto the punch plate (1), or via a ball lock punch retainer, the gas spring (4) should be in place before any final adjustments are made.

Use the pump unit (see page 43) together with a thin metal plate or thick piece of paper to check the punch is positioned correctly.

For installation examples, please see page 11.

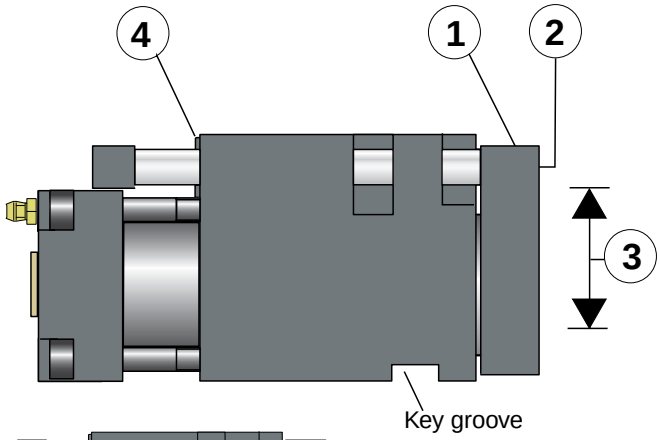

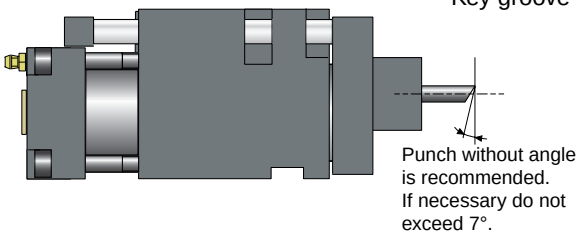

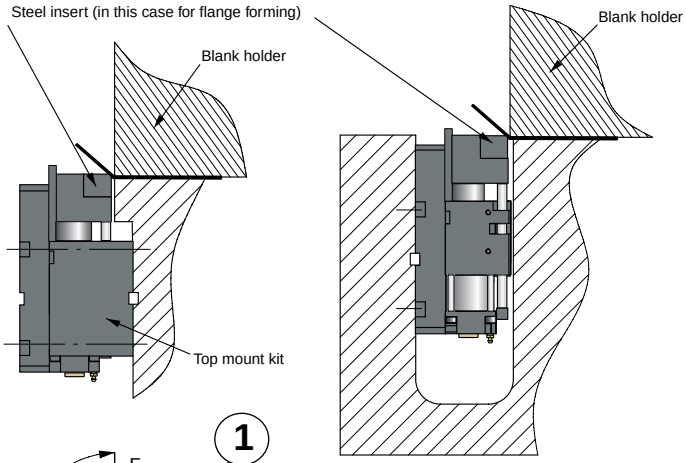

Flange cam installation possibilities

The flange cam can be mounted at any position in the die.

For the top mount, a "top mount kit" is needed but not for the base mount.

Flange cam force direction and location

The customized tool (1) (for flanging etc.) should be mounted using two or four bolts (2) within the designated area.

The force created by the flanging is allowed in directions "F" within the area marked

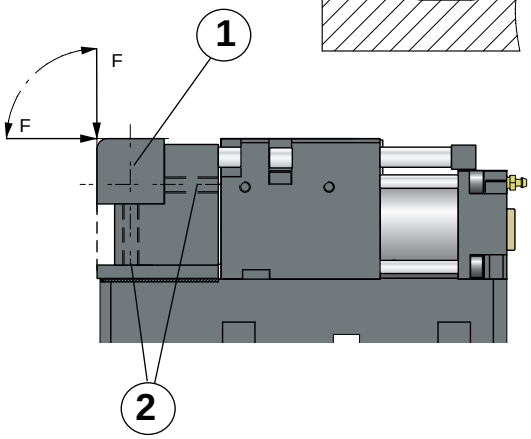

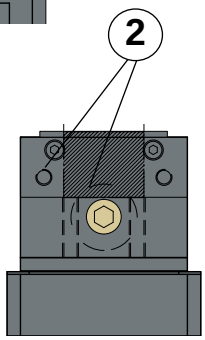

Force Cylinder

Use only flanges or fittings intended for the force cylinder. See also page 16 for "Technical data". The threaded holes at the top of the piston rod can be used to mount the fitting for the tool in a pushing and pulling application. Note that it is not possible to load any force in an off center position or as a side load.

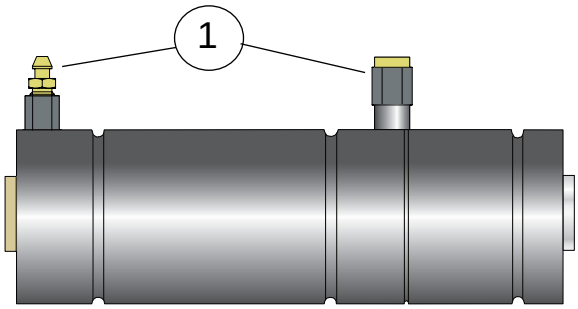

Make sure there is enough room to fill and bleed the force cylinder in the die (1). See also page 40-41.

Hydraulic hose and adapters

See page 27 to choose the adapters and the hose. Use as few adapters as possible and note that the hose is available with an elbow fitting.

The hoses are washed and plugged to protect them from dust as this could damage the system. Make sure the hoses are protected from sharp edges and external damage. Sharp edges must be rounded (1). Hoses will move a little depending on the oil pressure pulsation during the operations. Do not use a smaller bending radius than specified (2).

Adapters for the units have an O-ring (3) and a support washer (4) which must always be used. Check also that no movable parts can touch the units or the hoses. See also DIN 20066 for hose installations.

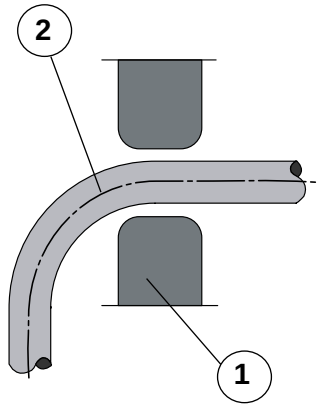

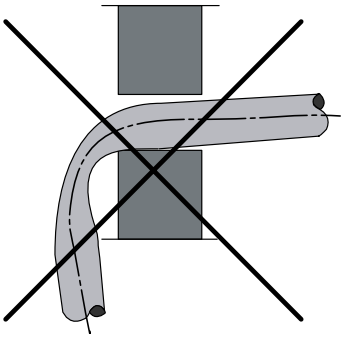

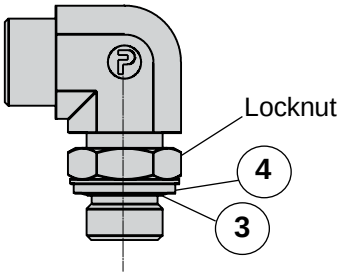

1-800-876-4976 • 440-526-5900 • FAX: 440-526-6807 • www.hysonproducts.com
© Hyson Products 2013

Proper Use and Maintenance

Gas Charging for Force Cylinder and Accumulator

Equipment needed:
Nitrogen bottle with at least 180 bar
Nitrogen charging assembly NCA-2600
Pressure indicator 3012300-01
G 1/8 adapter 3014016
Hex wrench 5 mm

NCA-2600

Step 1 Connect the nitrogen bottle

Connect the charging assembly to the nitrogen bottle which should have at least 180 bar pressure.

Step 2 Gas charging of the force cylinder (not valid for the compact cam)

Turn the small knob (1) counterclockwise until the release pin is inside the thread. Connect the adapter (2) to the charging assembly. Remove the plug on the force cylinder and connect the adapter by turning the knob (3) clockwise. Open the gas valve carefully counterclockwise using knob (4). Charge gas until the pressure gauge (5) shows 20 bar (max 40 bar). To empty, open knob (6) and the gas valve of the force cylinder by carefully turning knob (1) clockwise. Remove the charging assembly and fit the plug.

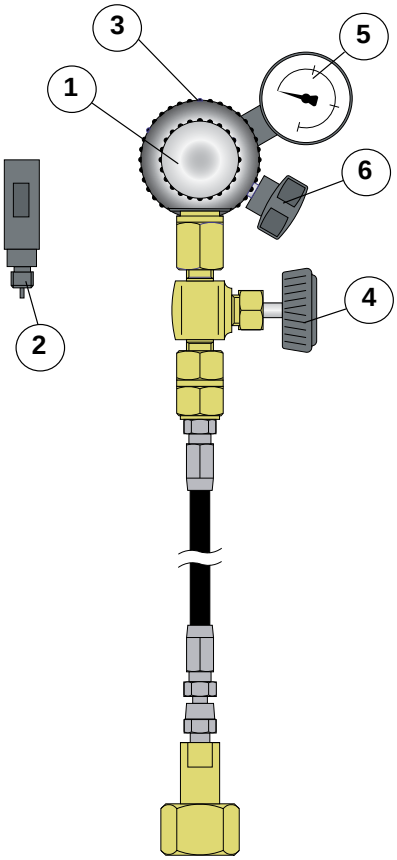

Press. Indicator

Step 3 **Charging of gas in the compact cam HCCH**

If the compact cam is connected to a hose system, the filling pressure is:

HCCU-15	180 bar
HCCU-40	180 bar
HCCU-60	180 bar
HCCU-90	150 bar
HCCU-150	150 bar

If there is no hose system, gas charging is not required.

Step 4 Charging the accumulator with gas

Charge the accumulator with 25 bar as per the procedure above. The accumulator must be charged with 150 bar or to a pressure suitable for the operation after the oil filling procedure. See page 16.

The gas port location can be changed (1) by first emptying the gas pressure, then twisting the accumulator tube to position (2).

When not using the charging assembly, empty the gas by closing the nitrogen bottle valve and opening the gas valve by turning counterclockwise. (See previous page)

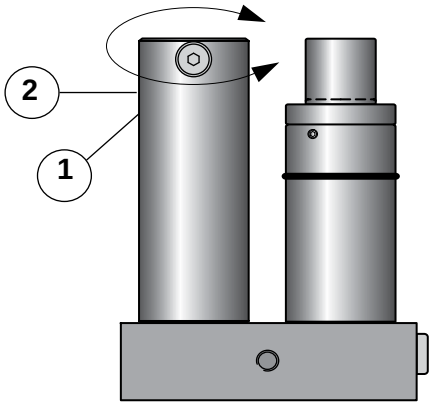

Oil filling and bleeding

Equipment	Size	Order no.
Pump unit		HPU-1200-HP
Hook spanner (-15)	3 mm	503417
Hook spanner(-40-150)	5 mm	503418
Hex wrench	6 mm	
Open-ended wrench	11 mm	
Open-ended wrench	14 mm	

18 liters of oil as per specification on page 16.

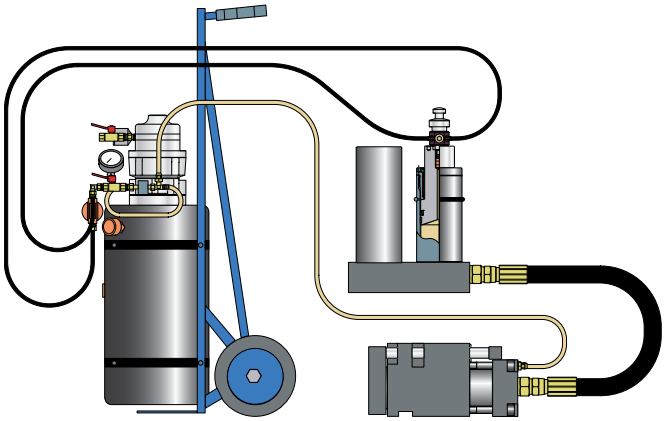

Compressed air information

Pressure must be between 5-7 bar. Moisture trap, filter and automatic air line lubricator must be installed in the air line to feed the air motor of the pump.

Step 1 Check the nitrogen pressure

Charge the cam unit/force cylinder and accumulator according to table at right. Make sure that the area around the units is kept clean and dry.

Cam Unit/Force Cylinder						Accumulator
HCCH					HCF	HCPU
15	40	60	90	150		
180 bar			150 bar		20 bar	25 bar

1-800-876-4976 • 440-526-5900 • FAX: 440-526-6807 • www.hysonproducts.com
© Hyson Products 2013

Step 2 Connect the pump unit

Turn knob (1) counterclockwise until the release pin for the valve (2) is inside the thread. Remove the plug and connect the oil armature on the top of the piston (3) by turning knob (4) clockwise. Open the valve (2) by turning knob (1) clockwise carefully until the stop is reached. Connect the transparent hose between the bleed nipple (5) and the pump unit (6). Connect compressed air to the valve (7) (thread G 1/4").

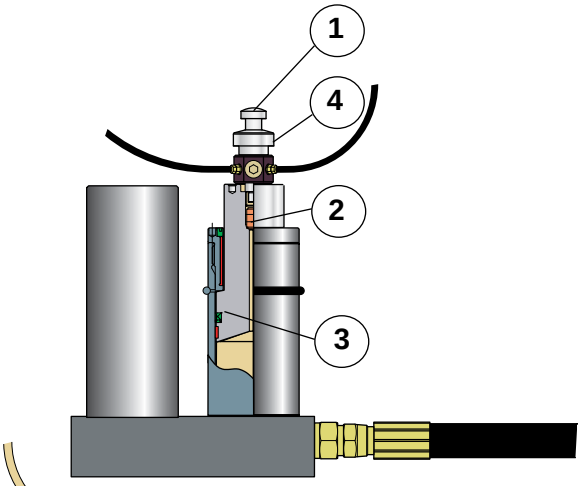

Step 3 Check the clearance of the cam unit/force cylinder

Check the clearance of the cam unit/ force cylinder and make sure that there is enough room for a full stroke.

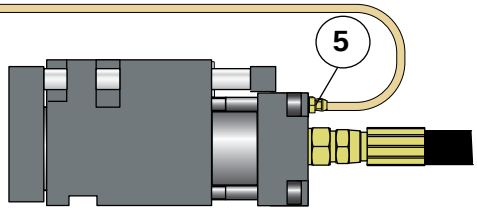

Step 4 Pump oil

Open the bleed nipple (5) and close the valve (9). Pump the oil by opening valve (7) until the oil is free from air bubbles. Close the bleed valve (5).

Note that the cam unit/force cylinder will move the full stroke.

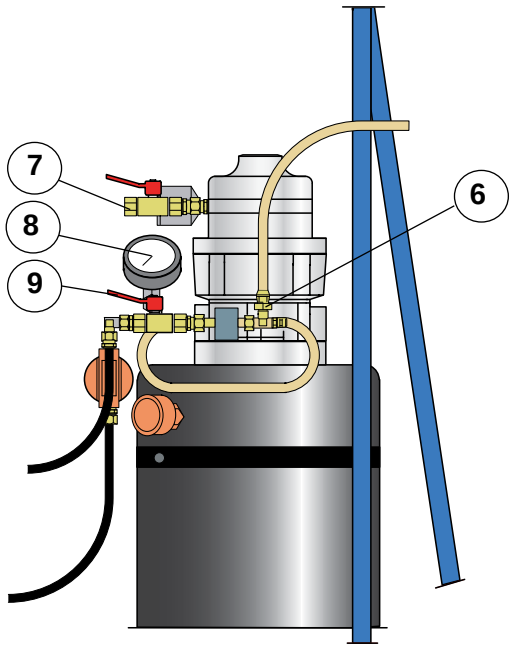

Step 5 Bleeding the cam unit/ force cylinder

Pump oil until pressure reaches 50 bar. Then open bleed nipple (5) and bleed the cam unit/ force cylinder. Have a cloth ready to collect any oil that may leak out. Close the bleed nipple (5). Repeat this until oil is free from air bubbles.

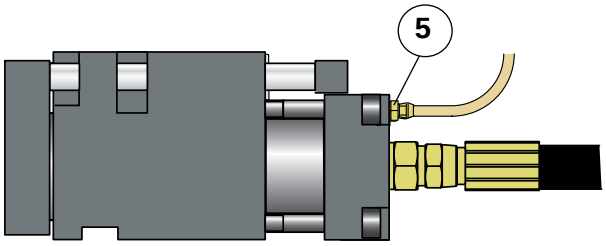

Step 6 Bleeding the power unit

Pump until the oil pressure is 50 bar, then open the valve (9) and bleed the power unit. Close the valve (9). Repeat this until the oil is free from air bubbles.

Step 7 Check that the oil is free from air

First make sure that there is no oil pressure. Try to push the piston down by hand. If it is possible to push it down a little there is some air left in the system. Repeat step 5 and 6 until the oil is totally free from air or the piston cannot be moved.

Step 8 Check for any leakage

Pump until oil pressure is 50 bar and look for any leakage from the adapters and the units. Make sure there is no oil pressure by opening the bleed valve (9).

Step 9 Disconnect the pump unit

Uncouple the oil filling armature and the transparent hose. Fit the plug on the top of the power cylinder by using the hook spanner to hold the piston. Tighten the bleed valve on the cam unit/ force cylinder and clean the area.

Step 10 Charge the accumulator with nitrogen

After the oil filling procedure, the accumulator has to be charged with nitrogen up to 150 bar or to the required gas pressure for the operation. Maximum pressure is 180 bar. See page 17.

The system is now ready for operation.

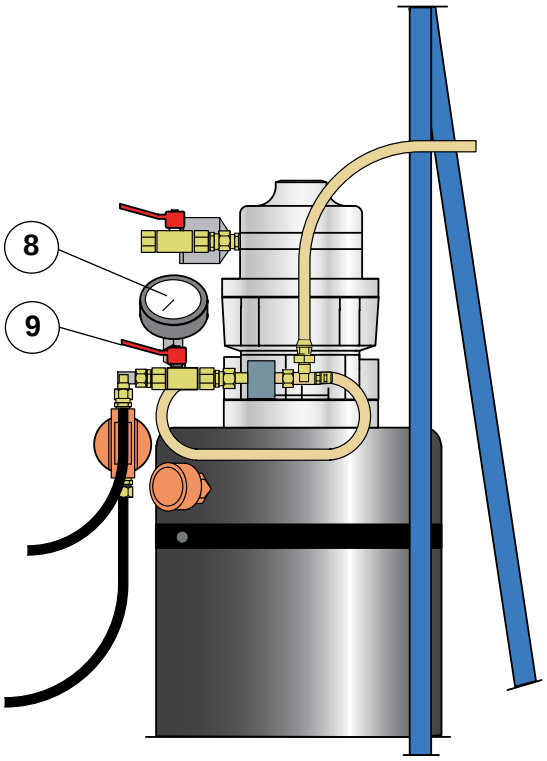

1-800-876-4976 • 440-526-5900 • FAX: 440-526-6807 • www.hysonproducts.com
© Hyson Products 2013

Changing the oil

Follow steps 1-10 as before but connect the transparent hose to a reservoir for used oil, not to the pump unit. Pump oil until new oil comes out through the transparent hose.

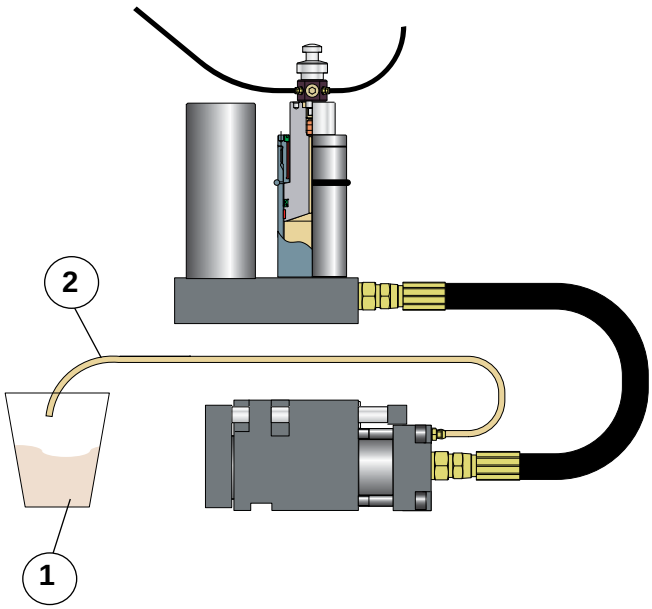

Oil

We recommend that oil is changed after 500,000 operations or every two years.

Pump Unit

Change the filter (1) and the transparent hose (2) every 200 working hours or every two years. Remove the complete filter by loosening the adapter and the hose. Put the filter in a vise and remove the bottom by turning it counterclockvise. Replace the filter and put the new filter in position together with the washer.

Filter	Order No.: 503419
Transparent hose	Order No.: 503116

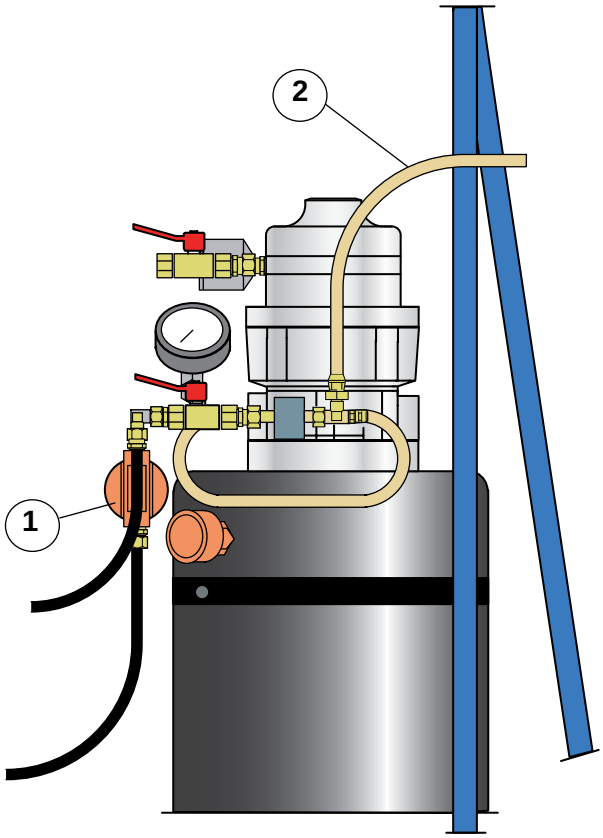

Service and maintenance

The lifetime of the products is normally 1 million strokes provided the installation and maintenance are performed correctly. In special conditions or environments the lifetime may be shorter or longer.

Power Unit and Force Cylinder (HCPU, HCPU-S, HCF)

Check the nitrogen pressure in the accumulator and the force cylinder every 200,000 strokes or twice a year.

Compact Cam (HCCU)/Flange Cam (HCCF)

Check the force of the return springs every 200,000 strokes or twice a year by removing the screws (1) and the spacer (2). Pull out the gas springs and use a test unit to measure the force of the gas springs.

The table below shows the type of gas springs and force for each cam unit.

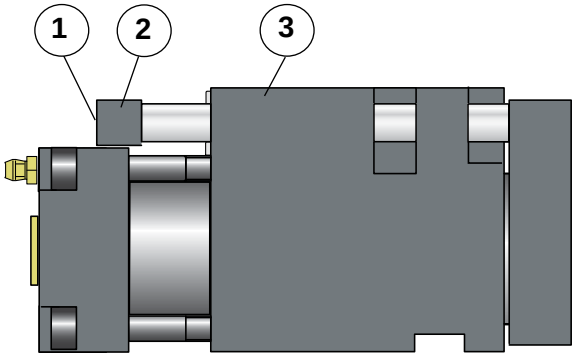

Cam Unit	Gas spring for return	Gas spring force	Min gas spring force*
HCCU-15	1x T2-180Xstroke	200 daN	140 daN
HCCU-40	2x T2-180Xstroke	200 daN	140 daN
HCCF-40	2x T2-180Xstroke	200 daN	140 daN
HCCU-60	2xT3-350Xstroke*	350 daN	250 daN
HCCU-90	2xNP-500Xstroke*	500 daN	350 daN
HCCU-150	2xT3-750Xstroke*	750 daN	530 daN

* If the gas spring force is lower than minimum, the gas spring has to be replaced.

1-800-876-4976 • 440-526-5900 • FAX: 440-526-6807 • www.hysonproducts.com
© Hyson Products 2013

Compact Cam (HCCH) and Flange Cam (HCCF-H) for Hose Systems

Check the nitrogen pressure in the compact cam every 200,000 strokes or twice a year.

When changing the gas spring, do not allow the oil within the spring to escape.

The table below shows the type of gas springs used for each cam unit.

Cam Unit	Gas spring for return	Gas spring pressure	Min gas spring pressure**
HCCH-15	1xMH-200xstroke	180 bar	125 bar
HCCH-40	2xMH-200xstroke	180 bar	125 bar
HCCF-H-40	2xMH-200xstroke	180 bar	125 bar
HCCH-60	2xT3-350xstroke*	180 bar	125 bar
HCCH-90	2xNP-500xstroke*	150 bar	105 bar
HCCH-150	2xT3-750xstroke*	150 bar	105 bar

* Be sure to remove the nitrogen charging valve in the springs when connecting to a hose system. The MH has no valve.

** If the pressure is lower than minimum, check the hose system and if necessary change the gas springs.

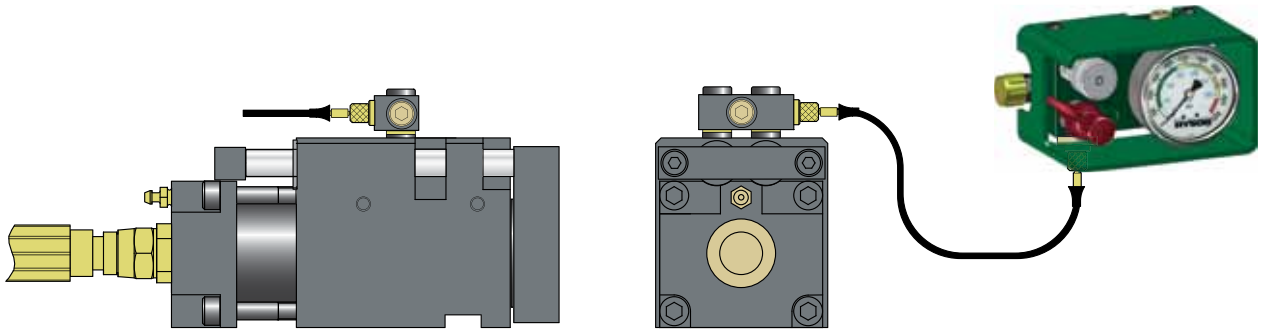

Service

This high precision equipment containing high pressure nitrogen must only be maintained or serviced by authorized fully qualified personnel. For any advice about this equipment contact your local Hyson distributor or representative.

Troubleshooting

Problem	Possible cause	Solution
1. Cam unit/force cylinder does not perform a full stroke.	1:1 Low gas pressure in the accumulator	Charge up the gas pressure, see page 83. (max 180 bar)
	1:2 Power cylinder does not perform a full stroke	Adjust the stroke length
	1:3 Oil leakage in power cylinder A: The port plug has come loose B: Damage on the seal and/or inside of the power cylinder	A: Replace the plug and fill the system, see page 83. B: Contact your distributor for service or replacement cylinder
	1:4 Oil leakage in cam unit A: The bleeding valve has come loose B: Damage on the seal and/or inside of the cam unit	A: Replace the bleed valve and fill the system, see page 83. B: Contact your distributor for service or replacement cam unit
	1:5 Hose or adapter has come loose or been damaged.	Replace the defective parts and fill the system, see page 83.

Problem	Possible cause	Solution
2. Cam unit/force cylinder does not retract.	2:1 Low gas pressure in the force cylinder (the force cylinder has to be in retracted position)	Check if the gas adapter or the plug have become loose. Charge with gas, see page 83 max 40 bar. If the gas quickly leaks out again, contact your distributor for service or replacement force cylinder.
	2:2 Low gas pressure in the return springs of the compact cam.	Replace the gas springs, see page 88. If hose system is used, see page 89.
	2:3 Gas leakage in the accumulator	Bleed the oil, see page 84. Contact your distributor for service or replacement accumulator.
	2:4 The return movement is jammed.	Contact your distributor for service or replacement cam unit/force cylinder.

1-800-876-4976 • 440-526-5900 • FAX: 440-526-6807 • www.hysonproducts.com
© Hyson Products 2013

Notes

Notes

1-800-876-4976 • 440-526-5900 • FAX: 440-526-6807 • www.hysonproducts.com
© Hyson Products 2013

U.S.A.
10367 Brecksville Road
Brecksville, OH 44141 USA
Tel: 800-876-4976, 440-526-5900
Fax: 440-526-6807
E-mail: hyson@asbg.com

Canada
975 Fraser Drive, Unit 14
Burlington, ONT L7L 4X8 Canada
Tel: 905-331-1311
Fax: 905-331-1342

Mexico
Av. Concordia #4601-A
Col. Apodaca Centro
CP 66600 Apodaca, N.L. Mexico
Tel: +52 81 8145-0570
Fax: +52 81 8145-0571

Calle 12 Pte. #1101-2 esquina con Av. Esteban de Antuñano
Col. La Libertad Puebla, Mexico C.P. 72130
Tel: +52 (222) 230-4826

China
Nitrogen Gas Products, Associated Spring (Tianjin) Co., Ltd.
Building A, Minggang Industrial Park
Hong Kong Street, Jinnan Economic Development Zone
Tianjin, China Post Code 300350
Tel: +86 22 2857 4310
Fax: +86 22 2857 4316

Korea
Barnes Korea, Ltd.
Zip Code 431-060, #1110, Sungjee Starwith
954-6 Gwanyang-dong Dongan-Ku
Anyang-Si Gyeonggi-do, Korea
Tel: +82 31 422 4591
Fax: +82 31 422 4593

India
Vatika Business Center, Level-5, Tower-C
Tech Park 1, Airport Road, Yerwada
Pune 411006
Tel: +91 20 4011 1422

www.hysonproducts.com

©Hyson Products 2013
NCC2MFebr2013